THE STATE OF DELAWARE
DEPARTMENT OF TRANSPORTATION

U.S. CUSTOMARY UNITS

CONSTRUCTION PLANS FOR:

CANTILEVER AND OVERHEAD SIGN STRUCTURES, I–95

CONTRACT NUMBER: T201907002

FEDERAL AID PROJECT NUMBER: IM–N059(43)

COUNTY: NEW CASTLE **M.R. #:** N/A

UNOFFICIAL WEB SITE COPY

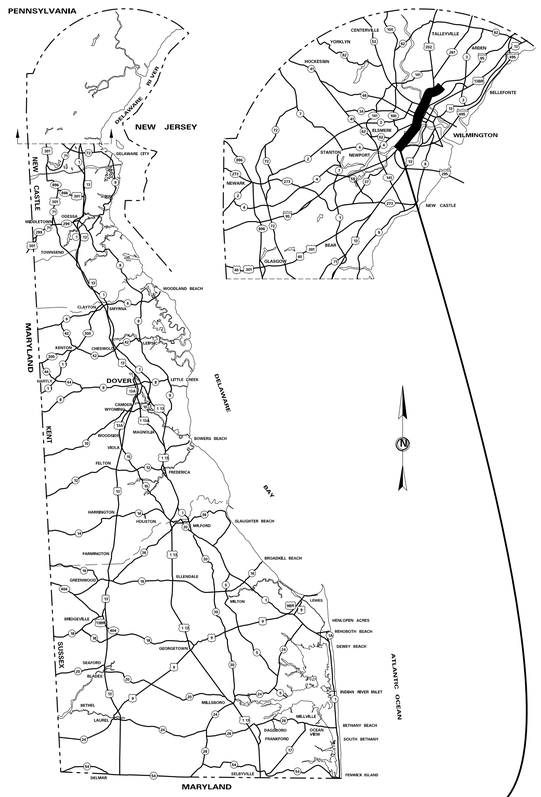

GENERAL LOCATION OF CONTRACT

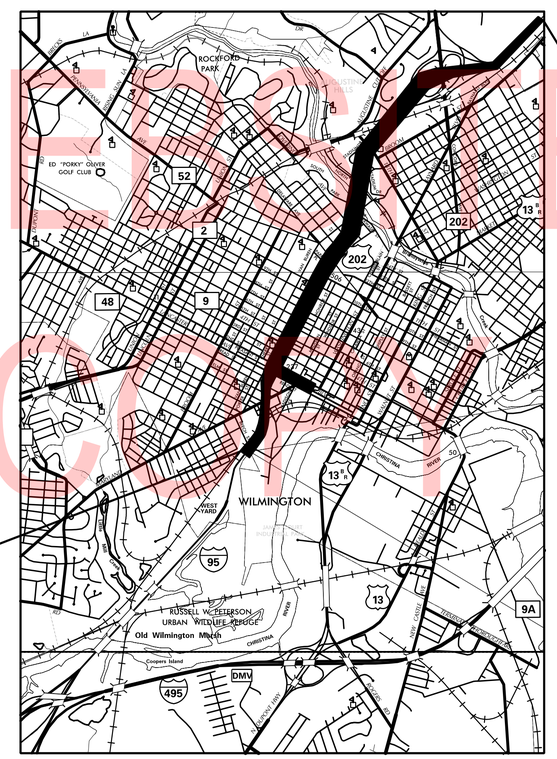

END CONTRACT STA. 1512+00

BEGIN CONTRACT STA. 1281+00

LOCATION MAP

NOT TO SCALE

DESIGN DESIGNATION

MRD #: N/A	ROAD NAME: N/A	
FUNCTIONAL CLASS: N/A	D.H.V. PROJECTED: N/A	YEAR: N/A
TYPE OF CONSTRUCTION: SIGN STRUCTURES	DESIGN SPEED: N/A	
A.A.D.T. CURRENT: N/A YEAR: N/A	TRUCKS: N/A	
A.A.D.T. PROJECTED: N/A YEAR: N/A	DIRECTION OF DISTRIBUTION: N/A	

APPROVED DESIGN EXCEPTIONS

DESIGN PARAMETER	REQUIRED	PROVIDED	DATE

ADDENDA /REVISIONS

ASSOCIATED CONTRACTS

CONTRACT NO.	CONTRACT NAME
I-2(2)	INTERSTATE HIGHWAY ROUTE I-95 GRADING, DRAINAGE, PAVING & APPURTENANCES
64-03-004	INTERSTATE HIGHWAY ROUTE I-95 SOUTH WILMINGTON VIADUCT
64-03-005	I-95 (PART 'C') FOURTH STREET TO BRANDYWINE
64-04-020	I-95 (PART A) FOURTH STREET TO NINTH STREET
64-04-021	I-95 BRANDYWINE RIVER BRIDGE TO MARSH ROAD GRADING AND PARTIAL PAVING
76-03-020	WILMINGTON BOULEVARD RAMPS E AND F VIADUCTS
76-01-015	WILMINGTON BOULEVARD I-95 MODIFICATIONS
75-06-001	I-95 WIDENING AND CHRISTINA INTERCHANGE TO SOUTH WILMINGTON VIADUCT
T200510602	I-95 & US 202 INTERCHANGE
T201407404	REHABILITATION OF I-95 FROM I-495 TO NORTH OF BRANDYWINE RIVER BRIDGE
T201906105	PAVEMENT & REHABILITATION, NORTH V (2015 HEP, SITE A)

APPROVED FOR ADVERTISEMENT

DIRECTOR OF TRANSPORTATION SOLUTIONS — DATE: 08/29/2019

PREPARED BY
T.Y. LIN INTERNATIONAL

Douglas E. Finney — 8/14/2019 DATE

THIS SEAL APPLIES TO ALL SHEETS BEARING THE "TY" SECTION DESIGNATION.

DOUGLAS E. FINNEY REGISTERED NO. 8434 DELAWARE PROFESSIONAL ENGINEER

SEAL

INDEX OF SHEETS

SECTION	SHEET DESCRIPTION	SHEET NO(S)
TY	TITLE	1
TY	INDEX OF SHEETS	2-3
TY	ADDENDA AND REVISIONS	4
TY	LEGEND	5
TY	NOTES	6
TY	HORIZONTAL AND VERTICAL CONTROL	7-32
TY	CONSTRUCTION PLANS	33-45
TY	GUIDE SIGN DIMENSIONS AND DETAILS	46-51
TY	SIGN SCHEDULES	52-55
TY	SIGN STRUCTURE NOTES	56
TY	SIGN STRUCTURE CROSS SECTIONS	57-68
TY	SIGN STRUCTURE DETAILS	69-75
TY	SOIL BORING LOGS	76-81
TY	CONSTRUCTION PHASING, M.O.T. AND EROSION CONTROL PLANS	82-96
TY	DETOUR PLANS	97-99

UNOFFICIAL WEBSITE COPY

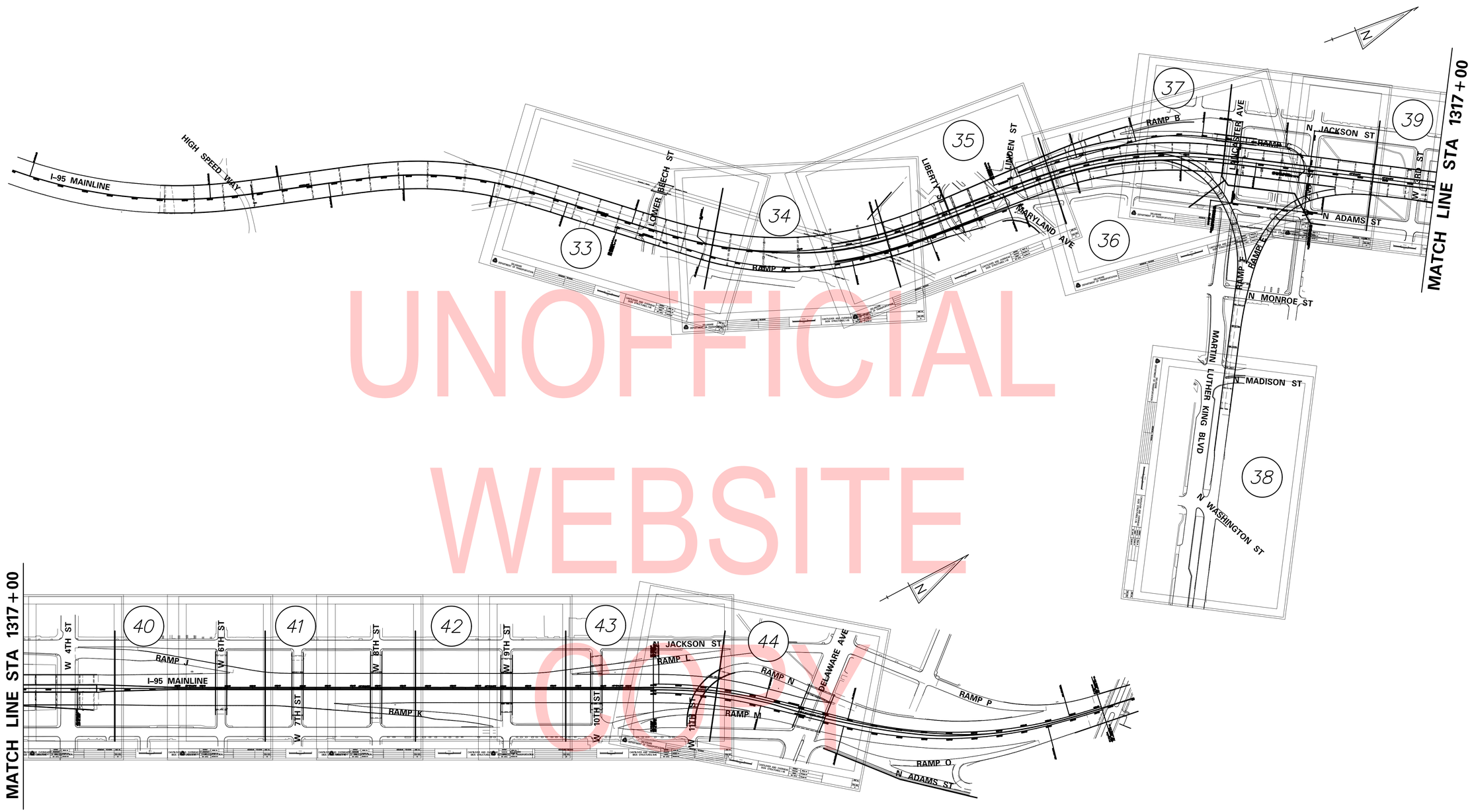

UNOFFICIAL WEBSITE COPY

PLAN SHEET INDEX CROSS REFERENCE													
CONSTRUCTION PLAN	33	34	35	36	37	38	39	40	41	42	43	44	45*
CONSTRUCTION PHASING, M.O.T. AND EROSION CONTROL PLAN	83	84	85	86	87	88	89	90	91	92	93	94	95*

*PLAN SHEET LOCATION NOT SHOWN ABOVE

ADDENDA / REVISIONS

SCALE 0 200 400 600 FEET

CANTILEVER AND OVERHEAD SIGN STRUCTURES, I-95

CONTRACT	BRIDGE NO.	N/A
T201907002	DESIGNED BY: JWS	
COUNTY		
NEW CASTLE	CHECKED BY: RMB	

PLAN SHEET INDEX

IS-02
SECTION
TY
SHEET NO.
3

8/13/2019
T:\Dover\Projects\425025.14.600_CADD\05_Official\IS02.dgn

UNOFFICIAL
WEBSITE
COPY

ADDENDA / REVISIONS	

CANTILEVER AND OVERHEAD SIGN STRUCTURES, I-95

CONTRACT	BRIDGE NO.	N/A
T201907002	DESIGNED BY: JWS	
COUNTY		
NEW CASTLE	CHECKED BY: RMB	

ADDENDA AND REVISIONS

AR-01
SECTION
TY
SHEET NO.
4

8/13/2019
T:\Dover\Projects\425025.14\600_CADD\05_Official\AR01.dgn

EXISTING SYMBOLS

DRAINAGE

	DITCH OR STREAM CENTERLINE
	DIRECTIONAL STREAM FLOW ARROW
C.B. / D.I.	DRAINAGE INLET
J.B.	DRAINAGE JUNCTION BOX
D	DRAINAGE MANHOLE
SIZE / TYPE LABEL	DRAINAGE PIPE AND FLOW ARROW
	DRAINAGE PIPE HEADWALL
	RIPRAP - AREA FEATURE
	RIPRAP - LINEAR FEATURE

MANMADE ROADSIDE FEATURES

	BOLLARD - STEEL POLE
	BOLLARD - WOOD POST
(TYPE LABEL)	CURB
(TYPE LABEL)	CURB AND GUTTER
	FENCE - CHAINLINK OR STRANDED
	FENCE - STOCKADE OR SPLIT RAIL
FP	FLAG POLE
	GUARDRAIL - STEEL BEAM
	GUARDRAIL - WIRE ROPE
LAMP	LAMP AND POST - RESIDENTIAL
MB	MAILBOX
PM	PARKING METER AND POST
	PAVEMENT - FLEXIBLE
	PAVEMENT - RIGID
	PILE - BRIDGE
	PILLAR OR MISCELLANEOUS POST
	TRAFFIC SIGN AND POST
	WALL - BRICK OR BLOCK
	WALL - STONE

NATURAL ROADSIDE FEATURES

	GRASS LAWN
	HEDGEROW OR THICKET
	MARSH BOUNDARY LINE
	TREE - CONIFEROUS
	TREE - DECIDUOUS
	TREE STUMP
	SHRUBBERY
WL	DELINEATED WETLAND BOUNDARY LINE
	WOODS LINE BOUNDARY

RIGHT-OF-WAY SYMBOLS

C.M.	PROPERTY MARKER - CONCRETE MON.
I.P.	PROPERTY MARKER - IRON PIPE
100+00	HISTORIC RIGHT-OF-WAY BASELINE
	EXISTING RIGHT-OF-WAY
	EXISTING PROPERTY LINE
EASEMENT TYPE	EXISTING EASEMENT
DA	EXISTING DENIAL OF ACCESS
R/W-DA	EXISTING R/W & DENIAL OF ACCESS

SURVEY CONTROL & MONUMENTATION

B.M.	SURVEY BENCHMARK LOCATION
T.P.	SURVEY TIE POINT LOCATION
	SURVEY TRAVERSE POINT
	POINT OF CURVATURE OR TANGENCY
	POINT OF INTERSECTING TANGENTS

UTILITY

	SOIL BORING LOCATION
	UTILITY TEST HOLE LOCATION
TV	CABLE TV DISTRIBUTION BOX
E	ELECTRIC MANHOLE
EM	ELECTRIC METER
E	ELECTRIC TRANSFORMER
	POLE MOUNTED LUMINAIRE
G	GAS MANHOLE
G.M.	GAS METER
G.V.	GAS VALVE
G.P.	GAS PUMP - SERVICE STATION
	RAILROAD TRACKS
S	SANITARY SEWER MANHOLE
S.V.	SANITARY SEWER VALVE
SCO	SANITARY SEWER CLEANOUT OR VENT
S.D.F.	SEPTIC DRAIN FIELD
B	TELEPHONE BOOTH
T	TELEPHONE MANHOLE
T	TELEPHONE TEST POINT
J.W.	TRAFFIC - CONDUIT JUNCTION WELL
	TRAFFIC - LIGHT POLE AND BASE
	TRAFFIC - PEDESTRIAN POLE & BASE
	TRAFFIC - SIGNAL CABINET & BASE
	TRAFFIC - SIGNAL POLE AND BASE
U	UTILITY BOX
	UTILITY POLE GUY WIRE ANCHOR
	UTILITY POLE
F.H.	WATER - FIRE HYDRANT
W.M.	WATER METER
W.V.	WATER VALVE
WELL	WELL HEAD
?	MANHOLE - UNDETERMINED OWNER

UTILITY COMPANY FACILITIES

PROPOSED SYMBOLS

CONSTRUCTION

	CONCRETE SAFETY BARRIER - PERMANENT
BFS	BIOFILTRATION SWALE
	BRICK PATTERNED SURFACE
	BUTT JOINT
CZ	CLEAR ZONE
100+00	CONSTRUCTION BASELINE
CSF	CONSTRUCTION SAFETY FENCE
	CURB, TYPE 1 & TYPE 3
	CURB, TYPE 2
	CURB & GUTTER, TYPE 1
	CURB & GUTTER, TYPE 2
	CURB & GUTTER, TYPE 3
	CURB & GUTTER, TYPE 4
	CURB OPENING
	DRAINAGE INLET
	DITCH
	FENCE - METAL
	FENCE - WOOD
	FLARED END SECTION
	GUARDRAIL, TYPE 1
	GUARDRAIL, TYPE 2
	GUARDRAIL, TYPE 3
	GUARDRAIL END ANCHORAGE
	GUARDRAIL END TREATMENT, TYPE 1
	GUARDRAIL END TREATMENT, TYPE 2
	GUARDRAIL END TREATMENT, TYPE 3
	IMPACT ATTENUATOR
	JUNCTION BOX - DRAINAGE
LO	LATERAL OFFSET
LOC	LIMIT OF CONSTRUCTION
MB	MAILBOX
	MANHOLE
	PAVEMENT PATCH
	PAVEMENT REMOVAL - TOPSOIL, SEED AND MULCH
	PIPE & DIRECTIONAL FLOW ARROW
	RIPRAP
	P.C.C. SIDEWALK - 4"
	P.C.C. SIDEWALK - 6" (USE 8" DEPTH FOR CHANNELIZATION ISLANDS.)
	UNDERDRAIN
	UNDERDRAIN OUTLET

RIGHT-OF-WAY SYMBOLS

	PROPOSED RIGHT-OF-WAY MONUMENT
DA	PROPOSED DENIAL OF ACCESS
PE	PROPOSED PERMANENT EASEMENT
R/W	PROPOSED RIGHT-OF-WAY
R/W-DA	PROPOSED R/W & DENIAL OF ACCESS
TCE	TEMPORARY CONSTRUCTION EASEMENT
100+00	PROPOSED RIGHT-OF-WAY BASELINE

IDENTIFIERS

A/C	ADJUST BY CONTRACTOR
A/O	ADJUST BY OTHERS
B	CONCRETE SAFETY BARRIER
C	CURB OR CURB & GUTTER
C/JB	CONVERT TO JUNCTION BOX
C/MH	CONVERT TO DRAINAGE MANHOLE
C/O	CURB OPENING
CR	CURB RAMP / TYPE
CR-N	CURB RAMP / TYPE - WITHOUT SIDEWALK SURFACE DETECTABLE WARNING SYSTEM
CSF	CONSTRUCTION SAFETY FENCE
DI	DRAINAGE INLET
DND	DO NOT DISTURB
ED	ENERGY DISSIPATOR
F	FENCE
FES	FLARED END SECTION
FF/C	FILL WITH FLOWABLE FILL
FS	FILTRATION STRUCTURE
GR	GUARDRAIL
JB	JUNCTION BOX
MH	MANHOLE
M	MONUMENT - RIGHT-OF-WAY
P	PIPE
RL/C	RELOCATE BY CONTRACTOR
RL/O	RELOCATE BY OTHERS
RL/PO	RELOCATE BY PROPERTY OWNER
RM/C	REMOVE BY CONTRACTOR
RM/TC	REMOVE BY TRAFFIC CONTRACTOR
RM/O	REMOVE BY OTHERS
UD	UNDERDRAIN / LENGTH
UDO	UNDERDRAIN OUTLET PIPE

LANDSCAPING

LS	LANDSCAPE PLANTINGS
	SHRUBBERY
	CONIFEROUS TREE
	DECIDUOUS TREE

TRAFFIC

ITMS-CON	ITMS CONDUIT
SIG-CON	SIGNAL CONDUIT
	CONDUIT JUNCTION WELL
	LUMINAIRE
	PAVEMENT MARKINGS
	PAVEMENT STRIPING
	TRAFFIC SIGN

MISCELLANEOUS

	TOP OF BANK

PAVEMENT SECTION(S)

	OVERLAY PAVEMENT - SEE TYPICAL SECTIONS FOR MATERIALS AND DEPTHS
	RECONSTRUCTED PAVEMENT - SEE TYPICAL SECTIONS FOR MATERIALS AND DEPTHS
	DRIVEWAY AND ENTRANCE PAVEMENT - SEE NOTES FOR MATERIALS AND DEPTHS

UNOFFICIAL WEBSITE COPY

ADDENDA / REVISIONS

CANTILEVER AND OVERHEAD SIGN STRUCTURES, I-95

CONTRACT T201907002	BRIDGE NO. N/A	LEGEND	LG-01
COUNTY NEW CASTLE	DESIGNED BY: JWS		SECTION TY
	CHECKED BY: RMB		SHEET NO. 5

8/13/2019
T:\Dover\Projects\425025.14\600_CADD\05_Official\LG01.dgn

GENERAL NOTES

1. THIS PROJECT IS TO BE CONSTRUCTED IN ACCORDANCE WITH THE DELAWARE DEPARTMENT OF TRANSPORTATION "STANDARD SPECIFICATIONS", DATED AUGUST 2016 AND THE DELAWARE DEPARTMENT OF TRANSPORTATION "STANDARD CONSTRUCTION DETAILS", DATED 2018, INCLUDING ALL REVISIONS UP TO THE DATE OF ADVERTISEMENT.

2. *ELECTRONIC DESIGN DATA FILES THAT WILL BE MADE AVAILABLE TO THE AWARDED CONTRACTOR, INCLUDE:*

(X)	*NONE*
( )	*ASCII DATA FILES WITH COORDINATES AND ELEVATIONS FOR PROPOSED POINTS AS SELECTED BY THE ENGINEER.*
( )	*EXISTING DIGITAL TERRAIN MODEL, IN .DTM FILE FORMAT, COMPATIBLE WITH SOFTWARE CURRENTLY USED BY DELDOT.*
( )	*PROPOSED DIGITAL TERRAIN MODEL, IN .DTM FILE FORMAT, COMPATIBLE WITH SOFTWARE CURRENTLY USED BY DELDOT.*
( )	*DESIGN FILE, IN .DGN FILE FORMAT, THAT CONTAINS 3D FEATURE LINES FOR THE PROPOSED DESIGN. 3D FEATURE LINES ARE FOR THE PROPOSED TOP SURFACE ELEVATION ONLY.*

NOTE: THE DOCUMENT ENTITLED "RELEASE FOR DELIVERY OF DOCUMENTS IN ELECTRONIC FORM TO A CONTRACTOR" MUST BE SIGNED BY ALL PARTIES PRIOR TO THE DELIVERY OF ANY ELECTRONIC PROJECT FILES.

NOTE: THERE MAY BE SOME AREAS OF THE PROJECT NOT INCLUDED IN THE ELECTRONIC DESIGN DATA FILE(S). IT IS THE CONTRACTOR'S RESPONSIBILITY TO REVIEW THE DESIGN DATA FILE AND DETERMINE THE LIMITS OF THE PROJECT INCLUDED.

3. *PROJECT FILES THAT WILL BE MADE AVAILABLE TO THE CONTRACTOR, INCLUDE:*

( )	*CROSS SECTIONS*
( )	*RIGHT-OF-WAY PLANS (WILL BE MADE AVAILABLE TO THE AWARDED CONTRACTOR)*

4. STAGING AREAS - PROPER EROSION AND SEDIMENT CONTROL MEASURES AS DETERMINED BY THE ENGINEER SHALL BE INSTALLED IN ALL STAGING AREAS. ALL AREAS USED BY THE CONTRACTOR FOR STAGING OPERATIONS SHALL BE FULLY RESTORED BY THE CONTRACTOR UPON COMPLETION OF THE CONTRACT. IF THE STAGING AREA IS PAVED, IT SHALL BE RESTORED TO ITS ORIGINAL CONDITION. IF THE AREA IS UNPAVED, IT SHALL BE RE-GRADED, TOPSOILED, SEEDED AND MULCHED IN ACCORDANCE WITH DELAWARE STANDARD SPECIFICATION SECTION 908 FOR TOPSOIL, SEED AND MULCH TO THE SATISFACTION OF THE ENGINEER. THE SEED SHALL ADHERE TO THE SPECIFICATIONS OF SECTION 908 FOR PERMANENT GRASS SEEDING - DRY GROUND. ALL COSTS ASSOCIATED WITH RESTORATION OF THE STAGING AREA SHALL BE AT THE CONTRACTOR'S EXPENSE. IF THE ENGINEER DETERMINES THAT A SATISFACTORY STAND OF GRASS DOES NOT EXIST AT THE TIME OF FINAL INSPECTION, ALL COSTS ASSOCIATED WITH REESTABLISHING A SATISFACTORY STAND OF GRASS SHALL BE AT THE CONTRACTOR'S EXPENSE.

5. THE CONTRACTOR MAY SIMULTANEOUSLY WORK ON MULTIPLE LOCATIONS WITH APPROVAL FROM THE TRAFFIC ENGINEER AND PROVIDING THE DETOURS AND MOT D0 NOT OVERLAP.

PROJECT NOTES

SECTION 100

1. ANY DAMAGE TO ITEMS NOTED TO BE RELOCATED OR RESET BY THE CONTRACTOR, AT THE DISCRETION OF THE ENGINEER, SHALL BE REPAIRED AND/OR REPLACED IN KIND AT THE CONTRACTOR'S EXPENSE.

SECTION 200

2. ITEMS TO BE REMOVED UNDER ITEM 211000 - REMOVAL OF STRUCTURES AND OBSTRUCTIONS SHALL INCLUDE, BUT NOT BE LIMITED TO THE LIST BELOW. REMOVAL OF EXISTING SIGN STRUCTURE INCLUDES REMOVAL OF THE STRUCTURE, SIGN PANELS, SIGN SUPPORTS, AND FOUNDATION UNLESS NOTED OTHERWISE IN THE PLANS.
   a. EXISTING SIGN STRUCTURE SB1267
   b. EXISTING SIGN STRUCTURE SB1268
   c. EXISTING SIGN STRUCTURE SB1269
   d. EXISTING SIGN STRUCTURE SB1270
   e. EXISTING SIGN STRUCTURE SB1276
   f. EXISTING SIGN STRUCTURE SB1277
   g. EXISTING SIGN STRUCTURE SB1278
   h. EXISTING SIGN STRUCTURE SB1279
   i. EXISTING SIGN STRUCTURE SB1280
   j. EXISTING SIGN STRUCTURE SB1281
   k. EXISTING SIGN STRUCTURE SC1048
   l. EXISTING SIGN STRUCTURE SC1196
   m. EXISTING SIGN STRUCTURE SC1208
   n. EXISTING SIGN STRUCTURE SC1209
   o. EXISTING SIGN STRUCTURE SC1229
   p. EXISTING SIGN STRUCTURE SO1031
   q. EXISTING SO1032 SIGN PANELS ONLY
   r. EXISTING SIGN STRUCTURE SO1034
   s. EXISTING SIGN STRUCTURE SO1194
   t. EXISTING GROUND MOUNTED SIGN STRUCTURE NORTH OF PROPOSED SC1038
   u. PORTION OF CHAIN LINK FENCE ALONG RAMP M

3. EXISTING SIGN STRUCTURE FOUNDATIONS SHALL BE REMOVED TO 1' BELOW EXISTING GRADE. PAYMENT SHALL BE INCLUDED IN ITEM 211000 - REMOVAL OF STRUCTURES AND OBSTRUCTIONS. AREA AROUND LOCATION WHERE EXISTING STRUCTURE WAS REMOVED SHALL BE RE-GRADED, TOPSOILED, SEEDED AND MULCHED IN ACCORDANCE WITH DELAWARE STANDARD SPECIFICATIONS 908004 AND 908014.

4. TO AVOID DAMAGE, SIGNS WITHIN PROJECT LIMITS MAY BE REMOVED DURING CONSTRUCTION IF NEEDED, BUT MUST BE REPLACED TO MATCH EXISTING CONDITIONS BEFORE REOPENING THE ROADWAY. ALL WORK RELATED TO MOVING AND REINSTALLING THE SIGN SHALL BE INCIDENTAL TO ITEM #211000 - REMOVAL OF STRUCTURES AND OBSTRUCTIONS. IF THE SIGN IS DAMAGED DURING CONSTRUCTION, THE SIGN MUST BE REPLACED AT THE CONTRACTOR'S EXPENSE.

SECTION 700

5. THE CONTRACTOR IS RESPONSIBLE TO FIELD VERIFY ALL EXISTING CONDITIONS, LAYOUT DIMENSIONS, AND CLEARANCES THAT ARE SHOWN ON THE DRAWINGS PRIOR TO ANY CONSTRUCTION WORK. THE COST OF THIS ITEM SHALL BE INCIDENTAL TO ITEM 763501 - CONSTRUCTION ENGINEERING.

6. THE CONTRACTOR SHALL SURVEY THE LAYOUT OF PROPOSED FOUNDATIONS AND ANCHOR BOLTS AND OBTAIN ENGINEER'S APPROVAL OF THE FOUNDATION LOCATIONS PRIOR TO PREPARING SHOP DRAWINGS FOR SIGN SUPPORTS TO BE ERECTED THEREON. THE SHOP DRAWINGS SHALL INCLUDE THE MEASUREMENTS OBTAINED FROM THE SURVEY. ALL SURVEY DATA WILL BE BASED ON THE NATIONAL GEODETIC SURVEY VERTICAL DATUM (NAVD88) AND THE NATIONAL GEODETIC SURVEY HORIZONTAL DATUM (NAD83). PAYMENT FOR ALL THE SURVEY WORK WILL BE INCIDENTAL TO ITEM 763501 - CONSTRUCTION ENGINEERING.

MISCELLANEOUS

7. THE CONTRACTOR SHALL COVER ALL SIGN FOUNDATION EXCAVATIONS AT THE END OF EACH WORKDAY WITH STEEL PLATES CAPABLE OF SUPPORTING PEDESTRIAN LOADS OR AS DIRECTED BY THE ENGINEER. PAYMENT SHALL BE INCIDENTAL TO ITEM 606006 - DRILLED SHAFT, 54", ITEM 606007 - DRILLED SHAFT, 66", ITEM 606005 - DRILLED SHAFT, 72", OR ITEM 606503 - DRILLED SHAFT IN ROCK, 60".

8. IF ANY DEWATERING IS NECESSARY TO EXCAVATE FOR THE SIGN STRUCTURE FOUNDATIONS, REFER TO SECTION 906 OF THE STANDARD SPECIFICATIONS FOR THE PUMPING REQUIREMENTS. PAYMENT SHALL BE INCIDENTAL TO ITEM 606006 - DRILLED SHAFT, 54", ITEM 606007 - DRILLED SHAFT, 66", ITEM 606005 - DRILLED SHAFT, 72", OR ITEM 606503 - DRILLED SHAFT IN ROCK, 60".

9. ALL WORK SHALL BE PERFORMED WITHIN THE EXISTING RIGHT-OF-WAY.

10. NO WORK SHALL BE PERFORMED OVER RAILROAD TRACKS OR WITHIN THE EXISTING RAILROAD RIGHT-OF-WAY.

11. THE CONTRACTOR SHALL NOTIFY DART FIRST STATE AT DOT_DETOURS@DELAWARE.GOV AT LEAST 14 DAYS PRIOR TO THE START OF ANY DETOURS OR CONSTRUCTION, AND DOT_DTC_PROJECTDEVELOPMENT@DELAWARE.GOV AT SUCH TIME THE FACILITY IS COMPLETED AND OPERABLE FOR TRANSIT OPERATIONS. FOR EMERGENCY DETOUR INFORMATION ONLY, PLEASE CONTACT DTC'S CHIEF SCHEDULER AT 302-576-6019.

12. THERE ARE NO ENVIRONMENTAL PERMITS ASSOCIATED WITH THIS PROJECT. AS SUCH, AN ENVIRONMENTAL COMPLIANCE SHEET WAS NOT PREPARED.

UNOFFICIAL WEBSITE COPY

CIRCULAR CURVE NO. 1 – I-95 MAINLINE

		STATION	NORTHING	EASTING
Element: Circular				
PC	(10200)	3002+00.00	621292.9640	607995.0347
PI	(10201)	3003+45.43	621437.2255	608013.4645
CC	(10202)		621499.5231	606378.1756
PT	(10203)	3004+90.10	621582.4710	608006.0637
Radius:		1630.00		
Delta:		10° 11′ 50.04″ Left		
Degree of Curvature(Arc):		3° 30′ 54.28″		
Length:		290.10		
Tangent:		145.43		
Chord:		289.72		
Middle Ordinate:		6.45		
External:		6.48		
Tangent Direction:		N 7° 16′ 49.04″ E		
Radial Direction:		S 82° 43′ 10.96″ E		
Chord Direction:		N 2° 10′ 54.02″ E		
Radial Direction:		N 87° 04′ 59.00″ E		
Tangent Direction:		N 2° 55′ 01.00″ W		

CONSTRUCTION ALIGNMENT CONTROL

POINT	STATION	OFFSET	NORTHING	EASTING
13000	3020+00.00	0.00	623039.3474	608259.0446

CIRCULAR CURVE NO. 3 – I-95 MAINLINE

		STATION	NORTHING	EASTING
Element: Circular				
PCC	(10207)	3010+06.53	622098.3666	607983.5340
PI	(10208)	3013+61.81	622453.6389	607981.1343
CC	(10209)		622109.5789	609643.4962
PCC	(10210)	3017+06.53	622778.7714	608124.3578
Radius:		1660.00		
Delta:		24° 09′ 39.14″ Right		
Degree of Curvature(Arc):		3° 27′ 05.59″		
Length:		700.00		
Tangent:		355.28		
Chord:		694.83		
Middle Ordinate:		36.76		
External:		37.59		
Tangent Direction:		N 0° 23′ 13.20″ W		
Radial Direction:		N 89° 36′ 46.80″ E		
Chord Direction:		N 11° 41′ 36.36″ E		
Radial Direction:		S 66° 13′ 34.07″ E		
Tangent Direction:		N 23° 46′ 25.93″ E		

CIRCULAR CURVE NO. 4 – I-95 MAINLINE

		STATION	NORTHING	EASTING
Element: Circular				
PCC	(10210)	3017+06.53	622778.7714	608124.3578
PI	(10211)	3018+06.67	622870.4155	608164.7277
CC	(10212)		621922.9381	610067.1909
PT	(10213)	3019+06.66	622957.8527	608213.5450
Radius:		2122.98		
Delta:		5° 24′ 04.76″ Right		
Degree of Curvature(Arc):		2° 41′ 55.81″		
Length:		200.14		
Tangent:		100.14		
Chord:		200.06		
Middle Ordinate:		2.36		
External:		2.36		
Tangent Direction:		N 23° 46′ 25.93″ E		
Radial Direction:		S 66° 13′ 34.07″ E		
Chord Direction:		N 26° 28′ 28.31″ E		
Radial Direction:		S 60° 49′ 29.31″ E		
Tangent Direction:		N 29° 10′ 30.69″ E		

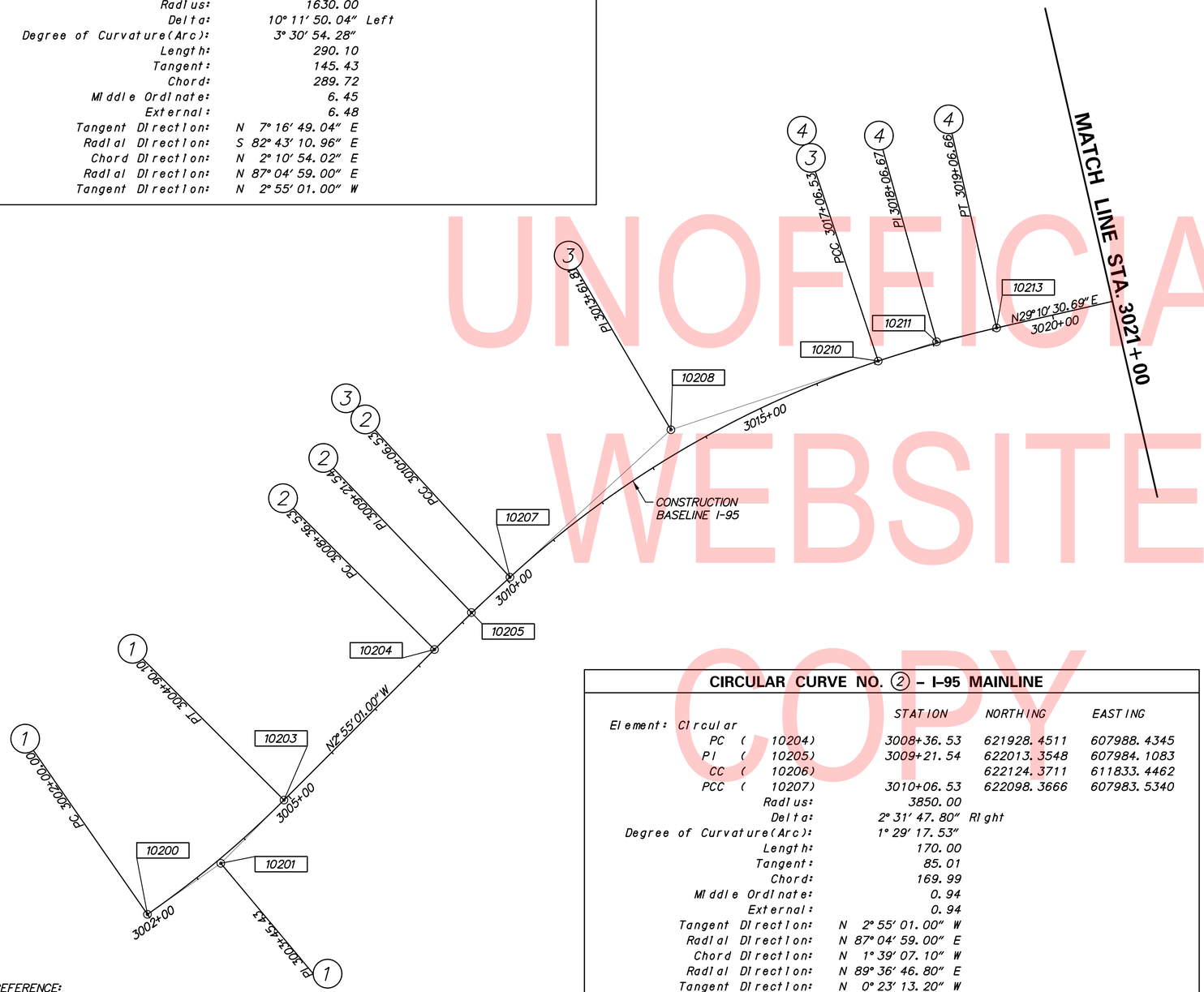

CIRCULAR CURVE NO. 2 – I-95 MAINLINE

		STATION	NORTHING	EASTING
Element: Circular				
PC	(10204)	3008+36.53	621928.4511	607988.4345
PI	(10205)	3009+21.54	622013.3548	607984.1083
CC	(10206)		622124.3711	611833.4462
PCC	(10207)	3010+06.53	622098.3666	607983.5340
Radius:		3850.00		
Delta:		2° 31′ 47.80″ Right		
Degree of Curvature(Arc):		1° 29′ 17.53″		
Length:		170.00		
Tangent:		85.01		
Chord:		169.99		
Middle Ordinate:		0.94		
External:		0.94		
Tangent Direction:		N 2° 55′ 01.00″ W		
Radial Direction:		N 87° 04′ 59.00″ E		
Chord Direction:		N 1° 39′ 07.10″ W		
Radial Direction:		N 89° 36′ 46.80″ E		
Tangent Direction:		N 0° 23′ 13.20″ W		

HV CONTROL LEGEND:

CMONU - SURVEY MONUMENT FOUND

DATUM REFERENCE:
HORIZONTAL - THIS PROJECT IS REFERENCED TO THE DELAWARE STATE PLANE COORDINATE SYSTEM (NAD 83/91).
VERTICAL - THIS PROJECT IS REFERENCED TO NAVD 88.

UNOFFICIAL WEBSITE COPY

ADDENDA / REVISIONS

SCALE 0 100 200 300 FEET

CANTILEVER AND OVERHEAD SIGN STRUCTURES, I-95

CONTRACT	BRIDGE NO.	N/A
T201907002	DESIGNED BY: RMB	
COUNTY		
NEW CASTLE	CHECKED BY: JWS	

HORIZONTAL AND VERTICAL CONTROL

HV-01
SECTION
TY
SHEET NO.
7

8/13/2019
T:\Dover\Projects\425025.14\600_CADD\05_Official\HV01.dgn

CONSTRUCTION ALIGNMENT CONTROL				
POINT	STATION	OFFSET	NORTHING	EASTING
13001	3025+00.00	0.00	623475.9141	608502.7855
10214	3028+69.34	0.00	623798.3979	608682.8324
13002	3030+00.00	0.00	623912.4385	608746.6017
13003	3035+00.00	0.00	624348.8438	608990.6314

CIRCULAR CURVE NO. 5 – I-95 MAINLINE

	STATION	NORTHING	EASTING
Element: Circular			
PC (10215)	3039+66.76	624756.2382	609218.4387
PI (10216)	3042+57.38	625009.8922	609360.2773
CC (10217)		623511.6871	611444.1055
PT (10218)	3045+45.50	625225.1260	609555.5539
Radius:	2550.00		
Delta:	13° 00′ 13.05″ Right		
Degree of Curvature(Arc):	2° 14′ 48.82″		
Length:	578.74		
Tangent:	290.62		
Chord:	577.50		
Middle Ordinate:	16.40		
External:	16.51		
Tangent Direction:	N 29° 12′ 47.17″ E		
Radial Direction:	S 60° 47′ 12.83″ E		
Chord Direction:	N 35° 42′ 53.69″ E		
Radial Direction:	S 47° 46′ 59.78″ E		
Tangent Direction:	N 42° 13′ 00.22″ E		

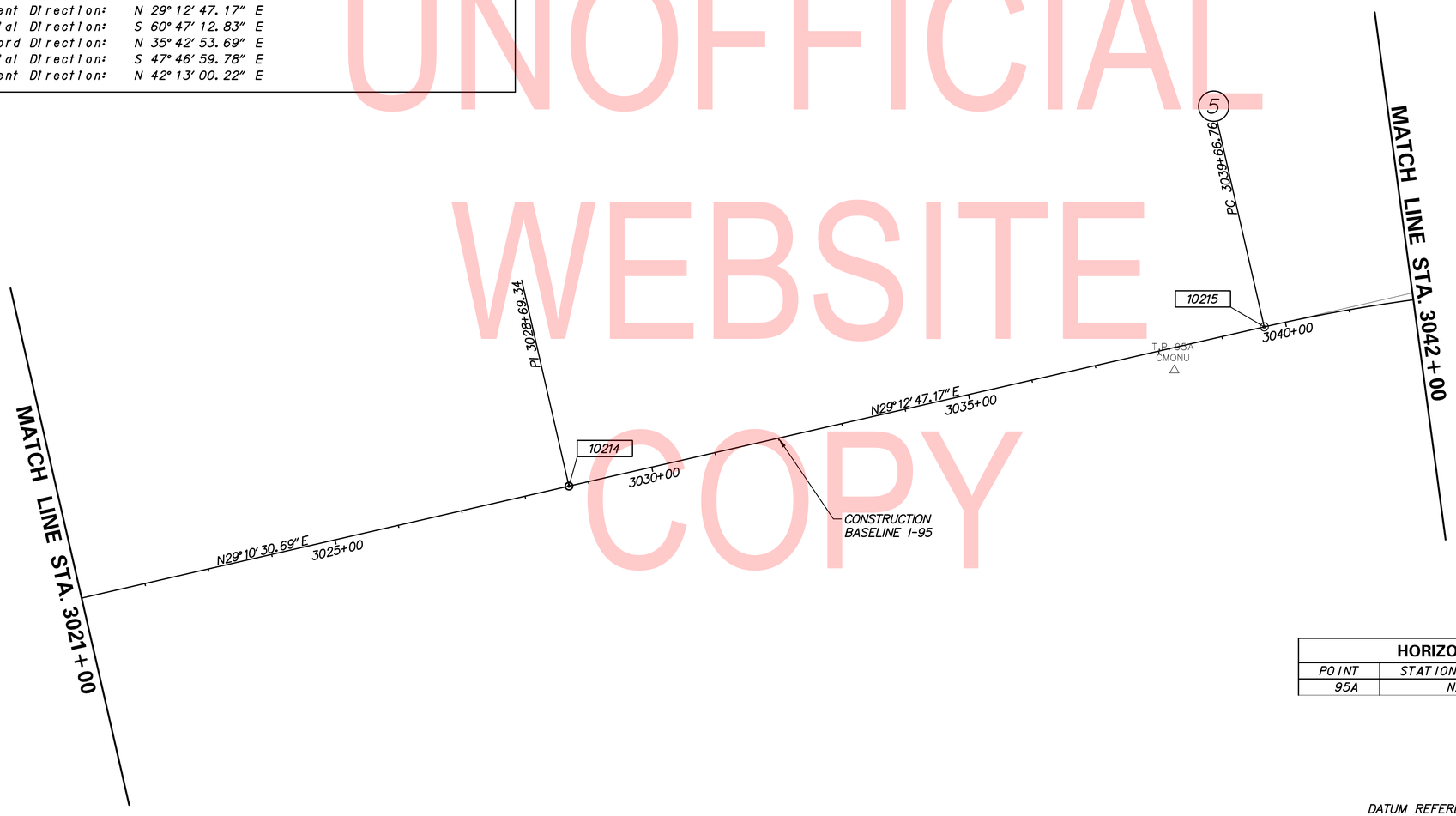

HV CONTROL LEGEND:

CMONU - SURVEY MONUMENT FOUND

HORIZONTAL / VERTICAL CONTROL DATA					
POINT	STATION	OFFSET	NORTHING	EASTING	ELEVATION
95A	N/A	N/A	622013.2442	608071.2904	16.40

DATUM REFERENCE:
HORIZONTAL - THIS PROJECT IS REFERENCED TO THE DELAWARE STATE PLANE COORDINATE SYSTEM (NAD 83/91).
VERTICAL - THIS PROJECT IS REFERENCED TO NAVD 88.

UNOFFICIAL WEBSITE COPY

ADDENDA / REVISIONS

SCALE 0 100 200 300 FEET

CANTILEVER AND OVERHEAD SIGN STRUCTURES, I-95

CONTRACT T201907002 | COUNTY NEW CASTLE | BRIDGE NO. N/A | DESIGNED BY: RMB | CHECKED BY: JWS

HORIZONTAL AND VERTICAL CONTROL

HV-02 | SECTION TY | SHEET NO. 8

8/13/2019
T:\Dover\Projects\425025.14\600_CADD\05_Official\HV02.dgn

CONSTRUCTION ALIGNMENT CONTROL				
POINT	STATION	OFFSET	NORTHING	EASTING
10219	3047+96.69	0.00	625411.1608	609724.3389
10000	1198+49.65	0.00	625302.1506	609601.1322
10001	1200+13.17	0.00	625423.2556	609711.0079
10002	1203+65.70	0.00	625684.8954	609947.2703
10003	1204+88.02	0.00	625775.8480	610029.0628
13004	1210+00.00	0.00	626155.6287	610372.4160
10004	1210+88.02	0.00	626220.9198	610431.4446
10005	1215+56.38	0.00	626568.3341	610745.5612

CIRCULAR CURVE NO. 5 – I-95 MAINLINE			
	STATION	NORTHING	EASTING
Element: Circular			
PC (10215)	3039+66.76	624756.2382	609218.4387
PI (10216)	3042+57.38	625009.8922	609360.2773
CC (10217)		623511.6871	611444.1055
PT (10218)	3045+45.50	625225.1260	609555.5539
Radius:	2550.00		
Delta:	13° 00′ 13.05″ Right		
Degree of Curvature(Arc):	2° 14′ 48.82″		
Length:	578.74		
Tangent:	290.62		
Chord:	577.50		
Middle Ordinate:	16.40		
External:	16.51		
Tangent Direction:	N 29° 12′ 47.17″ E		
Radial Direction:	S 60° 47′ 12.83″ E		
Chord Direction:	N 35° 42′ 53.69″ E		
Radial Direction:	S 47° 46′ 59.78″ E		
Tangent Direction:	N 42° 13′ 00.22″ E		

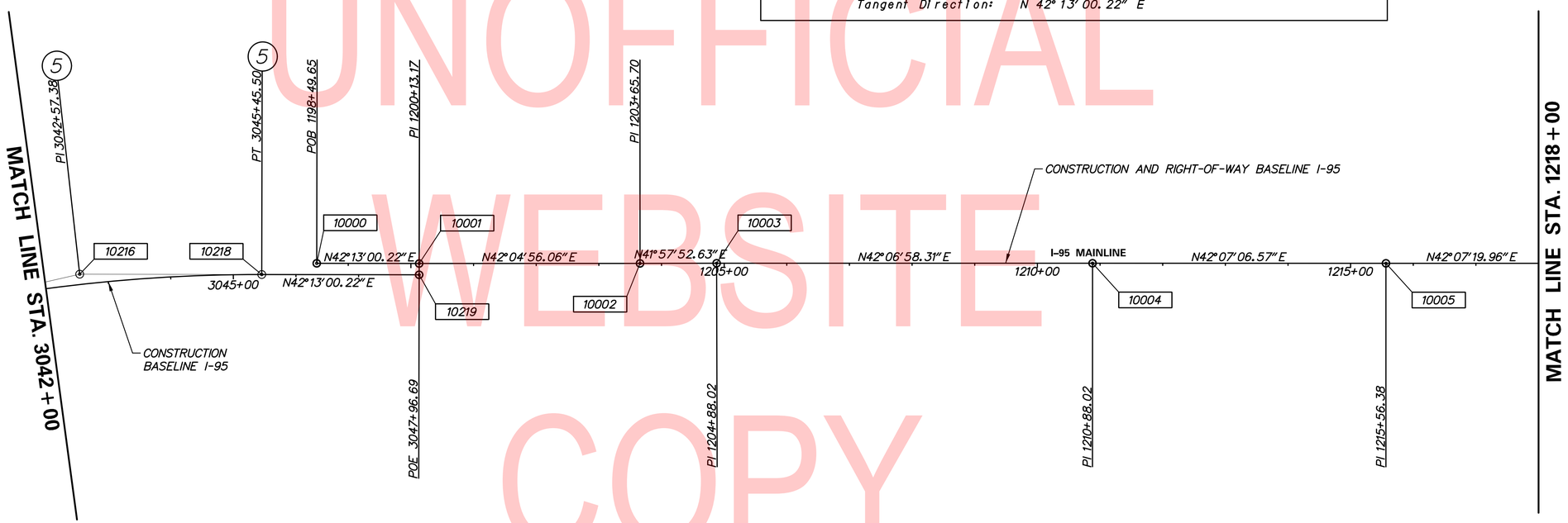

UNOFFICIAL WEBSITE COPY

HORIZONTAL / VERTICAL CONTROL DATA					
POINT	STATION	OFFSET	NORTHING	EASTING	ELEVATION
65	1211+78.21	-51.01	626322.0284	610454.0959	37.85
66	1204+17.49	-49.87	625756.7526	609944.8224	26.28

HORIZONTAL / VERTICAL CONTROL DATA					
POINT	STATION	OFFSET	NORTHING	EASTING	ELEVATION
95A	N/A	N/A	622013.2442	608071.2904	16.40

HV CONTROL LEGEND:

CMONU - SURVEY MONUMENT FOUND

DATUM REFERENCE:
HORIZONTAL - THIS PROJECT IS REFERENCED TO THE DELAWARE STATE PLANE COORDINATE SYSTEM (NAD 83/91).
VERTICAL - THIS PROJECT IS REFERENCED TO NAVD 88.

ADDENDA / REVISIONS

SCALE 0 100 200 300 FEET

CANTILEVER AND OVERHEAD SIGN STRUCTURES, I-95

CONTRACT	BRIDGE NO.	N/A
T201907002	DESIGNED BY: RMB	
COUNTY		
NEW CASTLE	CHECKED BY: JWS	

HORIZONTAL AND VERTICAL CONTROL

HV-03
SECTION TY
SHEET NO. 9

8/13/2019
T:\Dover\Projects\425025.14\600_CADD\05_Official\HV03.dgn

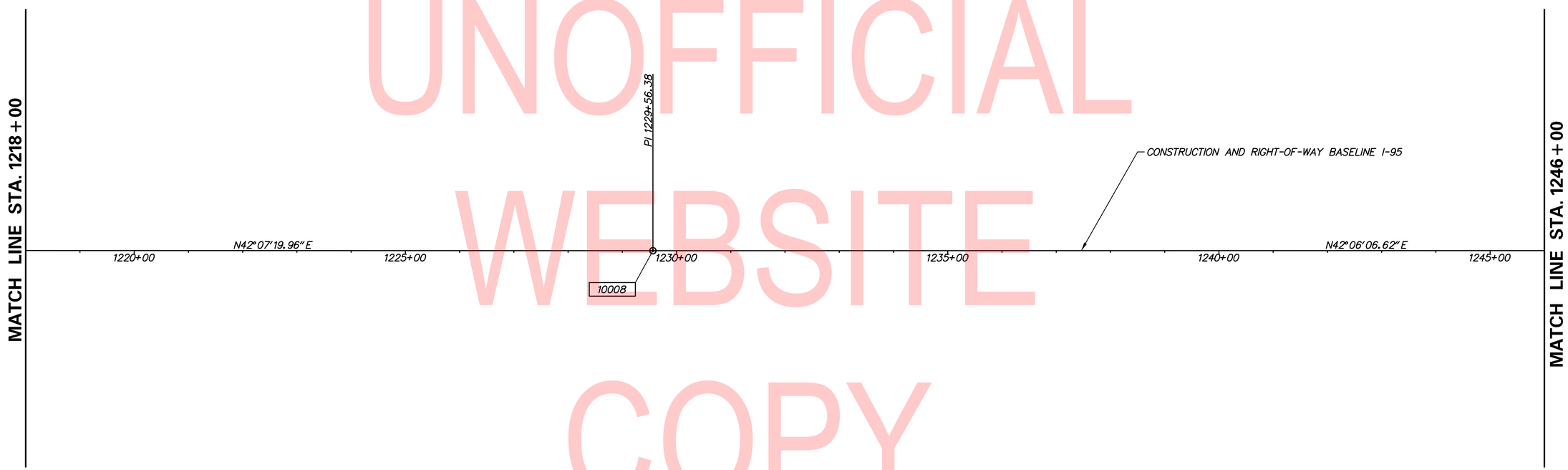

UNOFFICIAL WEBSITE COPY

CONSTRUCTION ALIGNMENT CONTROL				
POINT	STATION	OFFSET	NORTHING	EASTING
13005	1220+00.00	0.00	626897.3712	611043.1008
13006	1225+00.00	0.00	627268.2291	611378.4579
10008	1229+56.38	0.00	627606.7363	611684.5611
13007	1230+00.00	0.00	627639.0975	611713.8035
13008	1235+00.00	0.00	628010.0746	612049.0287
13009	1240+00.00	0.00	628381.0518	612384.2539
13010	1245+00.00	0.00	628752.0346	612719.4843

DATUM REFERENCE:
HORIZONTAL - THIS PROJECT IS REFERENCED TO THE DELAWARE STATE PLANE COORDINATE SYSTEM (NAD 83/91).
VERTICAL - THIS PROJECT IS REFERENCED TO NAVD 88.

ADDENDA / REVISIONS

SCALE
0 100 200 300
FEET

CANTILEVER AND OVERHEAD SIGN STRUCTURES, I-95

CONTRACT	BRIDGE NO.	N/A
T201907002	DESIGNED BY: RMB	
COUNTY		
NEW CASTLE	CHECKED BY: JWS	

HORIZONTAL AND VERTICAL CONTROL

HV-04
SECTION TY
SHEET NO. 10

8/13/2019
T:\Dover\Projects\425025.14\600_CADD\05_Official\HV04.dgn

CIRCULAR CURVE NO. 6 – I-95 MAINLINE

	STATION	NORTHING	EASTING
Element: Clothold			
TS (10014)	1257+31.98	629666.2493	613545.3005
SPI (10015)	1258+92.01	629785.1493	613652.4134
SC (10016)	1259+71.98	629847.8226	613702.1806
Entrance Radius:	0.00		
Exit Radius:	1930.00		
Length:	240.00		
Angle:	3° 33′ 44.7548″ Left		
Constant:	680.59		
Long Tangent:	160.03		
Short Tangent:	80.03		
Long Chord:	239.96		
Xs:	239.91		
Ys:	4.97		
P:	1.24		
K:	119.98		
Tangent Direction:	N 42° 00′ 52.5035″ E		
Radial Direction:	S 47° 59′ 07.4965″ E		
Chord Direction:	N 40° 49′ 37.7282″ E		
Radial Direction:	S 51° 32′ 52.2513″ E		
Tangent Direction:	N 38° 27′ 07.7487″ E		

HORIZONTAL / VERTICAL CONTROL DATA

POINT	STATION	OFFSET	NORTHING	EASTING	ELEVATION
95B	1269+69.63	217.51	630702.8364	614315.8317	7.34

HV CONTROL LEGEND:

CMONU - SURVEY MONUMENT FOUND

CONSTRUCTION ALIGNMENT CONTROL

POINT	STATION	OFFSET	NORTHING	EASTING
13011	1245+00.00	0.00	629123.0061	613054.7044
13012	1250+00.00	0.00	629493.9833	613389.9296
10013	1255+89.07	0.00	629560.0717	613449.6489

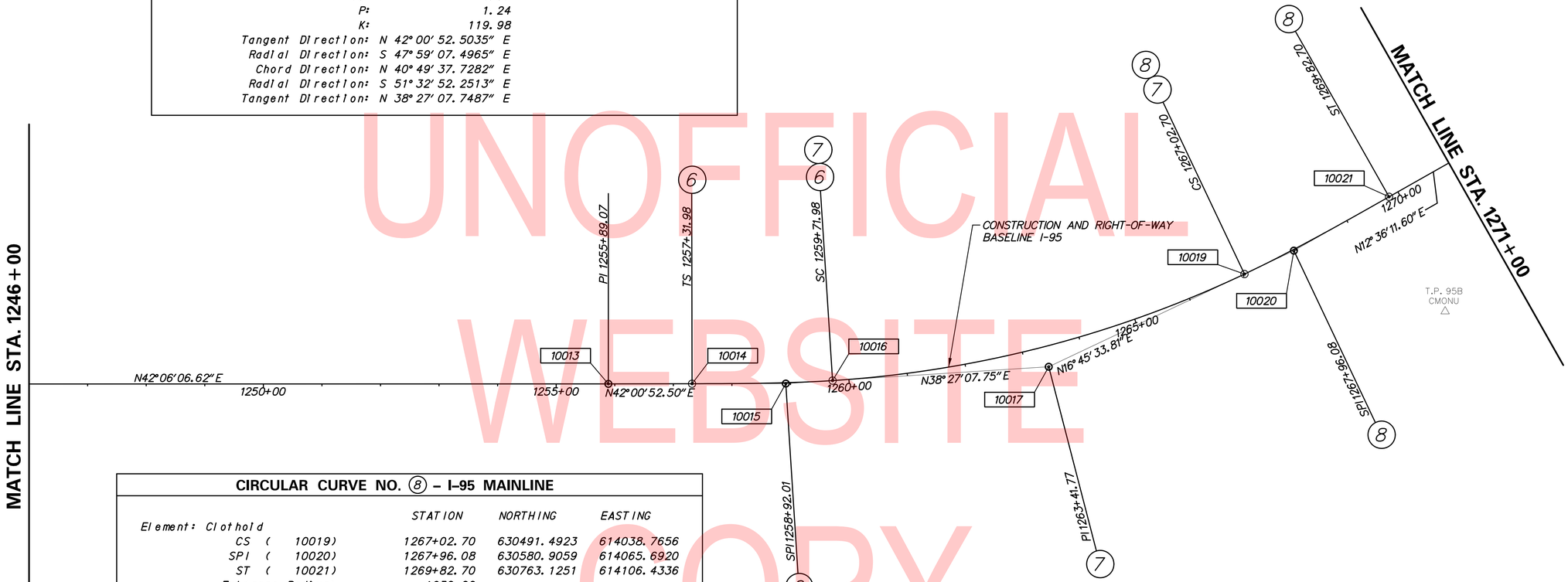

CIRCULAR CURVE NO. 8 – I-95 MAINLINE

	STATION	NORTHING	EASTING
Element: Clothold			
CS (10019)	1267+02.70	630491.4923	614038.7656
SPI (10020)	1267+96.08	630580.9059	614065.6920
ST (10021)	1269+82.70	630763.1251	614106.4336
Entrance Radius:	1930.00		
Exit Radius:	0.00		
Length:	280.00		
Angle:	4° 09′ 22.2139″ Left		
Constant:	735.12		
Long Tangent:	186.72		
Short Tangent:	93.38		
Long Chord:	279.93		
Xs:	279.85		
Ys:	6.77		
P:	1.69		
K:	139.98		
Tangent Direction:	N 16° 45′ 33.8141″ E		
Radial Direction:	S 73° 14′ 26.1859″ E		
Chord Direction:	N 13° 59′ 18.7778″ E		
Radial Direction:	S 77° 23′ 48.3998″ E		
Tangent Direction:	N 12° 36′ 11.6002″ E		

CIRCULAR CURVE NO. 7 – I-95 MAINLINE

	STATION	NORTHING	EASTING
Element: Circular			
SC (10016)	1259+71.98	629847.8226	613702.1806
PI (10017)	1263+41.77	630137.4127	613932.1364
CC (10018)		631048.0140	612190.7440
CS (10019)	1267+02.70	630491.4923	614038.7656
Radius:	1930.00		
Delta:	21° 41′ 33.9346″ Left		
Degree of Curvature(Arc):	2° 58′ 07.2957″		
Length:	730.72		
Tangent:	369.79		
Chord:	726.36		
Middle Ordinate:	34.48		
External:	35.11		
Tangent Direction:	N 38° 27′ 07.7487″ E		
Radial Direction:	S 51° 32′ 52.2513″ E		
Chord Direction:	N 27° 36′ 20.7814″ E		
Radial Direction:	S 73° 14′ 26.1859″ E		
Tangent Direction:	N 16° 45′ 33.8141″ E		

DATUM REFERENCE:
HORIZONTAL - THIS PROJECT IS REFERENCED TO THE DELAWARE STATE PLANE COORDINATE SYSTEM (NAD 83/91).
VERTICAL - THIS PROJECT IS REFERENCED TO NAVD 88.

UNOFFICIAL WEBSITE COPY

ADDENDA / REVISIONS

SCALE 0 100 200 300 FEET

CANTILEVER AND OVERHEAD SIGN STRUCTURES, I-95

CONTRACT	BRIDGE NO.	N/A
T201907002	DESIGNED BY: RMB	
COUNTY		
NEW CASTLE	CHECKED BY: JWS	

HORIZONTAL AND VERTICAL CONTROL

HV-05
SECTION
TY
SHEET NO.
11

8/13/2019
T:\Dover\Projects\425025.14\600_CADD\05_Official\HV05.dgn

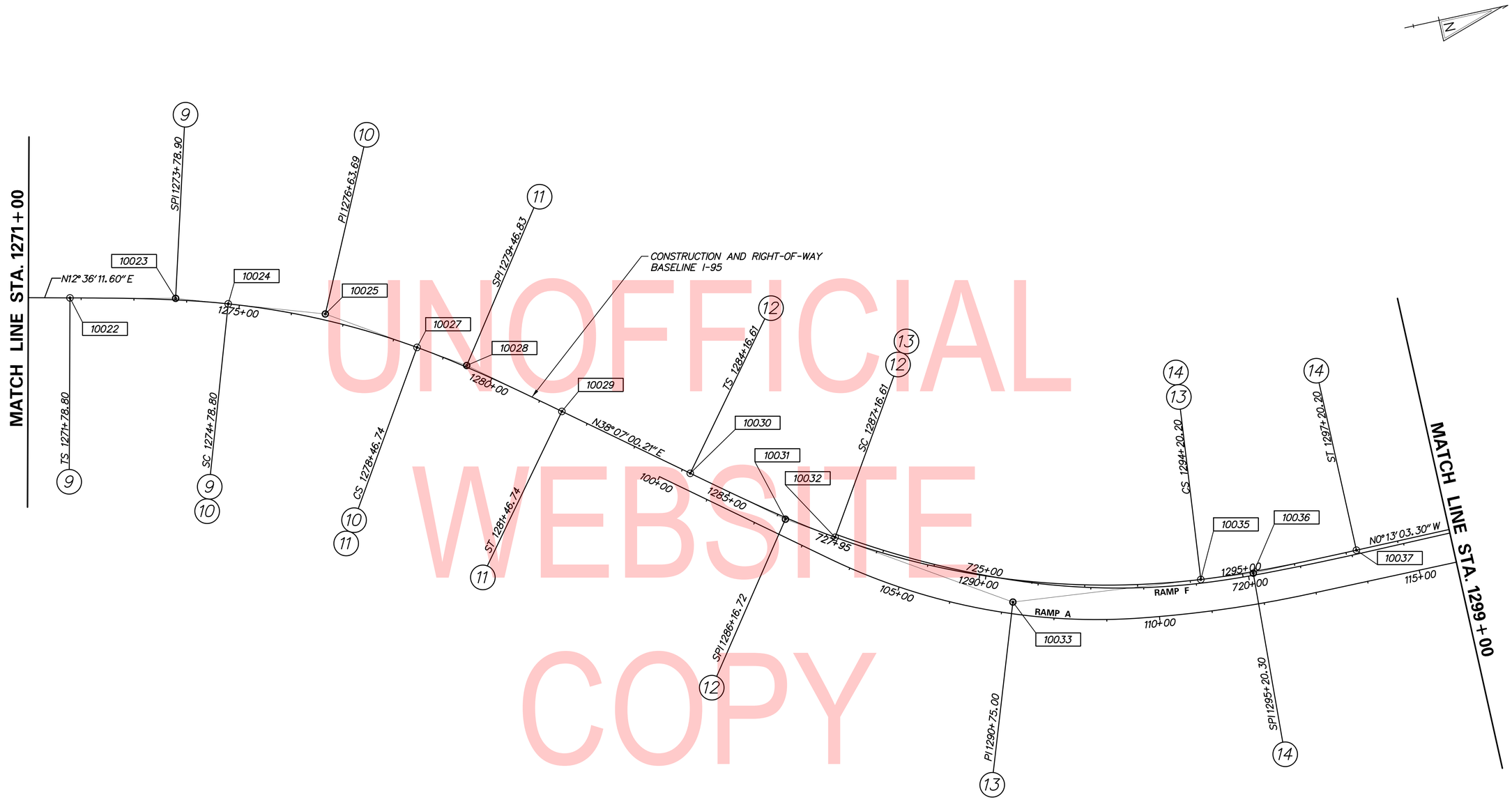

UNOFFICIAL WEBSITE COPY

DATUM REFERENCE:
HORIZONTAL - THIS PROJECT IS REFERENCED TO THE DELAWARE STATE PLANE COORDINATE SYSTEM (NAD 83/91).
VERTICAL - THIS PROJECT IS REFERENCED TO NAVD 88.

NOTES:
1. SEE SHEET HV-16 FOR CURVE DATA CHARTS.
2. FOR CARDINAL STATIONS ALONG THE CONSTRUCTION BASELINE RAMP A, SEE SHEET HV-13.
3. FOR CARDINAL STATIONS ALONG THE CONSTRUCTION BASELINE RAMP F, SEE SHEETS HV-13 AND HV-14.

ADDENDA / REVISIONS	

SCALE: 0 100 200 300 FEET

CANTILEVER AND OVERHEAD SIGN STRUCTURES, I-95

CONTRACT	BRIDGE NO.	N/A
T201907002	DESIGNED BY: RMB	
COUNTY		
NEW CASTLE	CHECKED BY: JWS	

HORIZONTAL AND VERTICAL CONTROL

HV-06
SECTION
TY
SHEET NO.
12

8/13/2019
T:\Dover\Projects\425025.14\600_CADD\05_Official\HV06.dgn

CLOTHOID CURVE NO. (15) – I-95 MAINLINE

	STATION	NORTHING	EASTING
Element: Clothold			
TS (10038)	1299+47.71	633459.3076	615136.7955
SPI (10039)	1301+47.82	633659.4110	615136.0356
SC (10040)	1302+47.71	633759.0435	615145.6502
Entrance Radius:	0.00		
Exit Radius:	1500.00		
Length:	300.00		
Angle:	5° 43′ 46.4806″ Right		
Constant:	670.82		
Long Tangent:	200.10		
Short Tangent:	100.10		
Long Chord:	299.87		
Xs:	299.70		
Ys:	9.99		
P:	2.50		
K:	149.95		
Tangent Direction:	N 0° 13′ 03.2964″ W		
Radial Direction:	N 89° 46′ 56.7036″ E		
Chord Direction:	N 1° 41′ 31.6149″ E		
Radial Direction:	S 84° 29′ 16.8158″ E		
Tangent Direction:	N 5° 30′ 43.1842″ E		

CIRCULAR CURVE NO. (16) – I-95 MAINLINE

	STATION	NORTHING	EASTING
Element: Circular			
SC (10040)	1302+47.71	633759.0435	615145.6502
PI (10041)	1304+66.04	633976.3581	615166.6211
CC (10042)		633614.9623	616638.7144
CS (10043)	1306+81.31	634178.6784	615248.6697
Radius:	1500.00		
Delta:	16° 33′ 44.7653″ Right		
Degree of Curvature(Arc):	3° 49′ 10.9871″		
Length:	433.60		
Tangent:	218.32		
Chord:	432.10		
Middle Ordinate:	15.64		
External:	15.81		
Tangent Direction:	N 5° 30′ 43.1842″ E		
Radial Direction:	S 84° 29′ 16.8158″ E		
Chord Direction:	N 13° 47′ 35.5668″ E		
Radial Direction:	S 67° 55′ 32.0505″ E		
Tangent Direction:	N 22° 04′ 27.9495″ E		

CONSTRUCTION ALIGNMENT CONTROL

POINT	STATION	OFFSET	NORTHING	EASTING
13013	1310+00.00	0.00	634464.9669	615388.3410
13014	1315+00.00	0.00	634907.2411	615621.5653
10046	1319+15.37	0.00	635274.6561	615815.3141
10050	1320+00.00	0.00	635274.6779	615815.2728
13015	1325+00.00	0.00	635716.9521	616048.4970
11030	1800+00.00	0.00	634455.6410	615205.6821
11031	1803+26.58	0.00	634302.7448	615494.2645
11035	200+00.00	0.00	634558.6859	615629.5179
11036	203+26.95	0.00	634711.5515	615340.5088
11040	1700+00.00	0.00	634225.9209	615453.6666
11041	1704+47.44	0.00	634621.5218	615662.7239

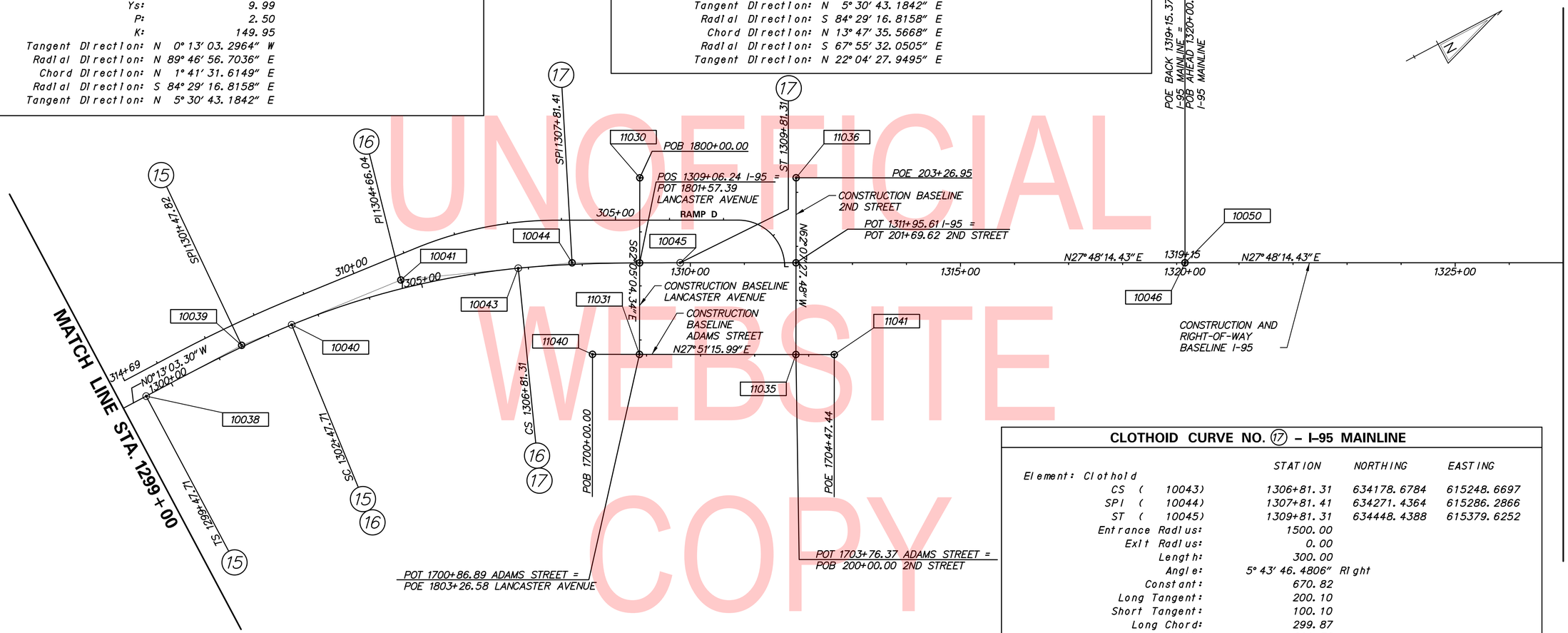

CLOTHOID CURVE NO. (17) – I-95 MAINLINE

	STATION	NORTHING	EASTING
Element: Clothold			
CS (10043)	1306+81.31	634178.6784	615248.6697
SPI (10044)	1307+81.41	634271.4364	615286.2866
ST (10045)	1309+81.31	634448.4388	615379.6252
Entrance Radius:	1500.00		
Exit Radius:	0.00		
Length:	300.00		
Angle:	5° 43′ 46.4806″ Right		
Constant:	670.82		
Long Tangent:	200.10		
Short Tangent:	100.10		
Long Chord:	299.87		
Xs:	299.70		
Ys:	9.99		
P:	2.50		
K:	149.95		
Tangent Direction:	N 22° 04′ 27.9495″ E		
Radial Direction:	S 67° 55′ 32.0505″ E		
Chord Direction:	N 25° 53′ 39.5187″ E		
Radial Direction:	S 62° 11′ 45.5699″ E		
Tangent Direction:	N 27° 48′ 14.4301″ E		

NOTES:
1. FOR CARDINAL STATIONS ALONG THE CONSTRUCTION BASELINE RAMP A, SEE SHEET HV-13.
2. FOR CARDINAL STATIONS ALONG THE CONSTRUCTION BASELINE RAMP D AND RAMP F, SEE SHEETS HV-13 AND HV-14.
3. FOR CARDINAL STATIONS ALONG THE CONSTRUCTION BASELINE RAMP E, RAMP H, RAMP J AND RAMP K, SEE SHEET HV-14.

DATUM REFERENCE:
HORIZONTAL - THIS PROJECT IS REFERENCED TO THE DELAWARE STATE PLANE COORDINATE SYSTEM (NAD 83/91).
VERTICAL - THIS PROJECT IS REFERENCED TO NAVD 88.

UNOFFICIAL WEBSITE COPY

ADDENDA / REVISIONS	

SCALE 0 100 200 300 FEET

CANTILEVER AND OVERHEAD SIGN STRUCTURES, I-95

CONTRACT	BRIDGE NO.	N/A
T201907002	DESIGNED BY: RMB	
COUNTY		
NEW CASTLE	CHECKED BY: JWS	

HORIZONTAL AND VERTICAL CONTROL

HV-07
SECTION
TY
SHEET NO.
13

8/13/2019
T:\Dover\Projects\425025.14\600_CADD\05_Official\HV07.dgn

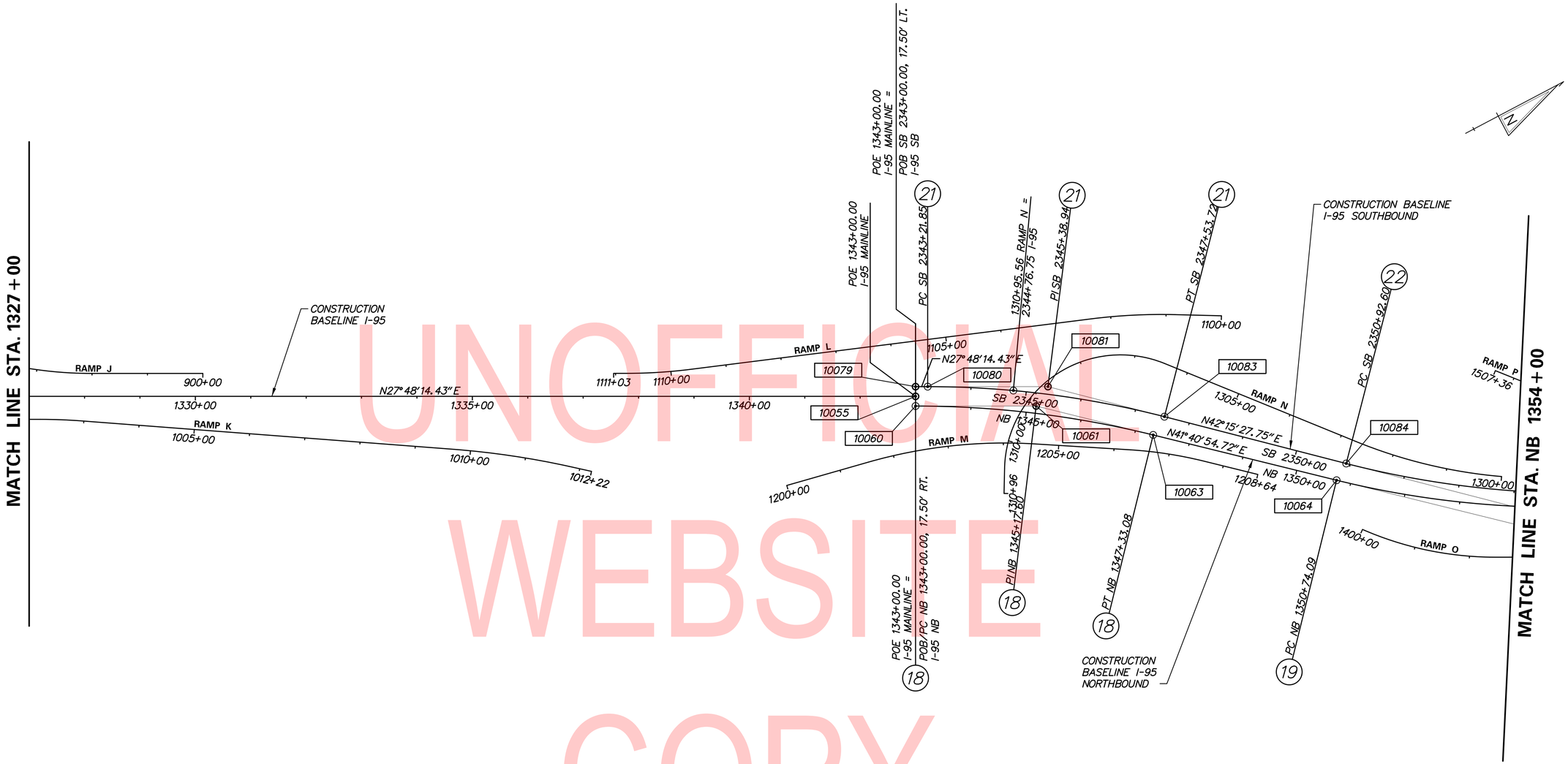

UNOFFICIAL WEBSITE COPY

CONSTRUCTION ALIGNMENT CONTROL				
POINT	STATION	OFFSET	NORTHING	EASTING
13016	1330+00.00	0.00	636159.2263	616281.7213
13017	1335+00.00	0.00	636601.5005	616514.9456
13018	1340+00.00	0.00	637043.7746	616748.1698
10055	1343+00.00	0.00	637309.1391	616888.1044
10079	SB 2343+00.00	0.00	637317.3020	616872.6248

DATUM REFERENCE:
HORIZONTAL - THIS PROJECT IS REFERENCED TO THE DELAWARE STATE PLANE COORDINATE SYSTEM (NAD 83/91).
VERTICAL - THIS PROJECT IS REFERENCED TO NAVD 88.

NOTES:
1. SEE SHEET HV-17 FOR CURVE DATA CHARTS.
2. FOR CARDINAL STATIONS ALONG THE CONSTRUCTION BASELINE RAMP J AND RAMP K, SEE SHEET HV-14.
3. FOR CARDINAL STATIONS ALONG THE CONSTRUCTION BASELINE RAMP L, RAMP M, RAMP N, RAMP O AND RAMP P, SEE SHEET HV-15.

ADDENDA / REVISIONS

SCALE 0 100 200 300 FEET

CANTILEVER AND OVERHEAD SIGN STRUCTURES, I-95

CONTRACT	BRIDGE NO.	N/A
T201907002	DESIGNED BY: RMB	
COUNTY		
NEW CASTLE	CHECKED BY: JWS	

HORIZONTAL AND VERTICAL CONTROL

HV-08
SECTION TY
SHEET NO. 14

8/13/2019
T:\Dover\Projects\425025,14\600_CADD\05_Official\HV08.dgn

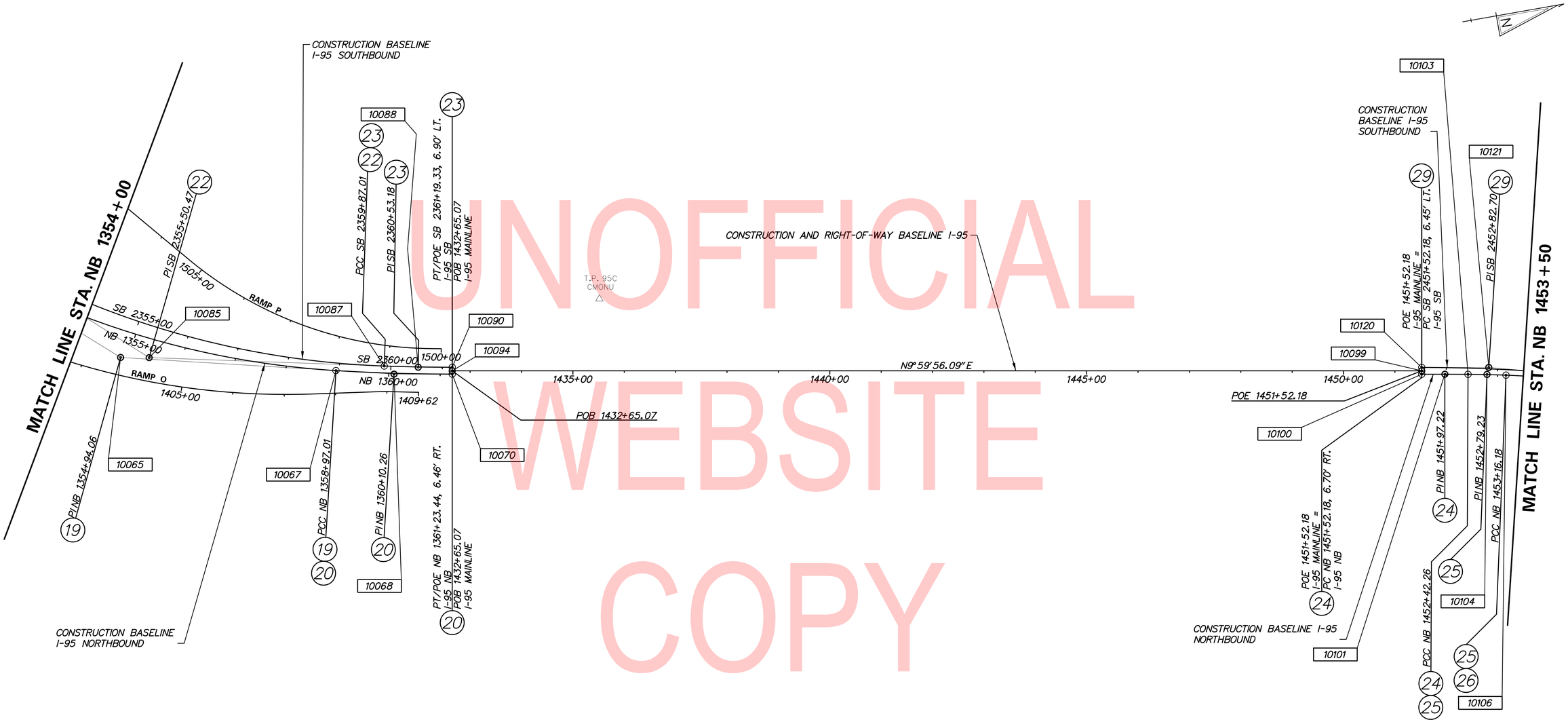

UNOFFICIAL WEBSITE COPY

CONSTRUCTION ALIGNMENT CONTROL				
POINT	STATION	OFFSET	NORTHING	EASTING
10094	1432+65.07	0.00	638855.4894	617793.4585
13019	1435+00.00	0.00	639086.8513	617834.2493
13020	1440+00.00	0.00	639579.2568	617921.0640
13021	1445+00.00	0.00	640071.6644	618007.8792
13022	1450+00.00	0.00	640564.0678	618094.6935
10099	1451+52.18	0.00	640713.9392	618121.1170

HORIZONTAL / VERTICAL CONTROL DATA					
POINT	STATION	OFFSET	NORTHING	EASTING	ELEVATION
95C	1435+51.61	-139.74	639161.9435	617705.5887	91.86

DATUM REFERENCE:
HORIZONTAL - THIS PROJECT IS REFERENCED TO THE DELAWARE STATE PLANE COORDINATE SYSTEM (NAD 83/91).
VERTICAL - THIS PROJECT IS REFERENCED TO NAVD 88.

NOTES:
1. SEE SHEETS HV-17, HV-18 AND HV-19 FOR CURVE DATA CHARTS.
2. FOR CARDINAL STATIONS ALONG THE CONSTRUCTION BASELINE RAMP O AND RAMP P, SEE SHEET HV-15.

ADDENDA / REVISIONS

SCALE
0 100 200 300
FEET

CANTILEVER AND OVERHEAD SIGN STRUCTURES, I-95

CONTRACT	BRIDGE NO.	N/A
T201907002	DESIGNED BY: RMB	
COUNTY		
NEW CASTLE	CHECKED BY: JWS	

HORIZONTAL AND VERTICAL CONTROL

HV-09
SECTION
TY
SHEET NO.
15

8/13/2019
T:\Dover\Projects\425025.14\600_CADD\05_Official\HV09.dgn

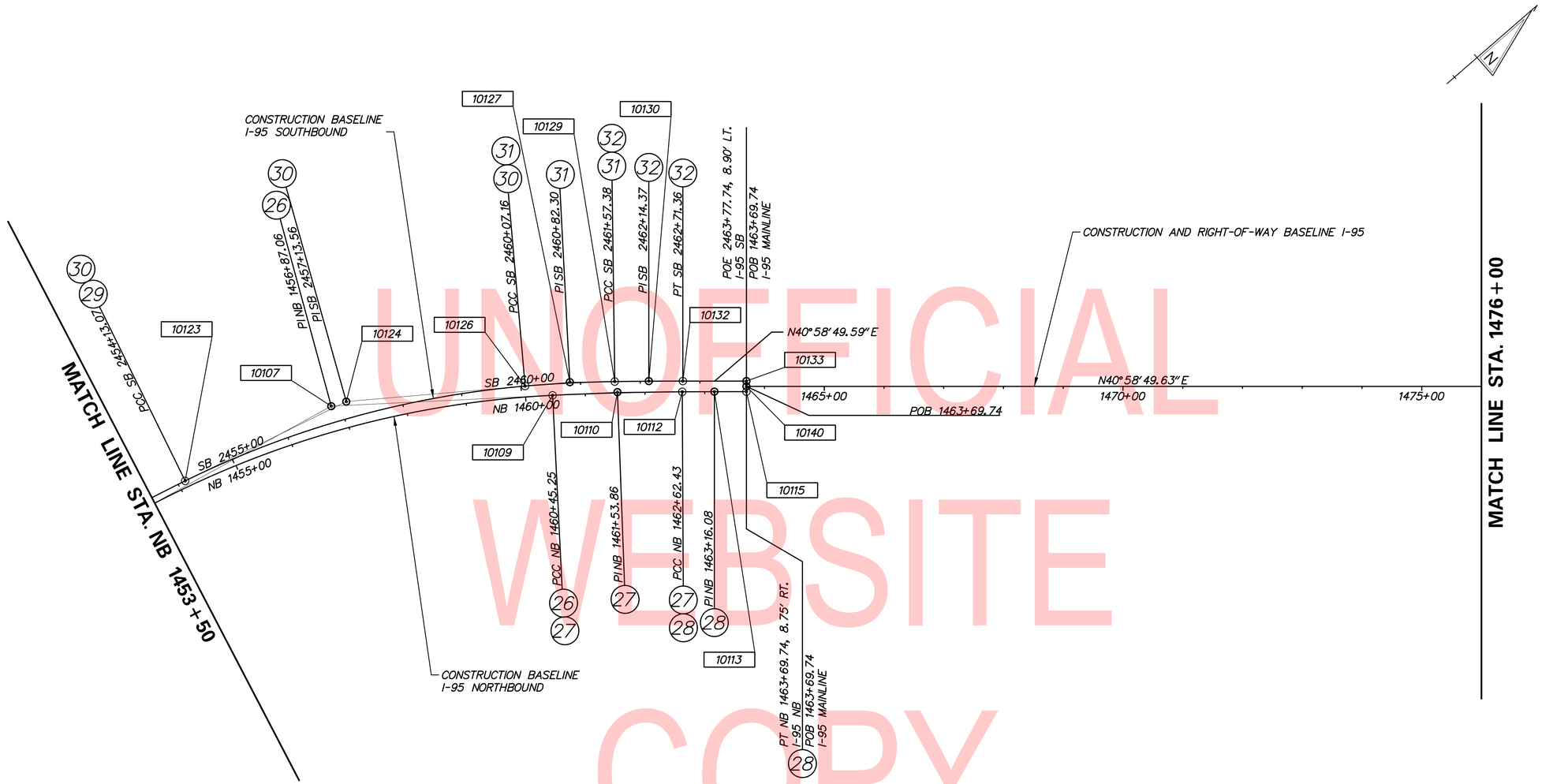

UNOFFICIAL WEBSITE COPY

CONSTRUCTION ALIGNMENT CONTROL				
POINT	STATION	OFFSET	NORTHING	EASTING
10133	SB 2463+77.74	0.00	641788.4376	618660.6899
10140	1463+69.74	0.00	641782.6010	618667.4088
13023	1465+00.00	0.00	641881.6946	618753.4902
13024	1470+00.00	0.00	642259.1613	619081.3910
13025	1475+00.00	0.00	642636.6279	619409.2917

DATUM REFERENCE:
HORIZONTAL - THIS PROJECT IS REFERENCED TO THE DELAWARE STATE PLANE COORDINATE SYSTEM (NAD 83/91).
VERTICAL - THIS PROJECT IS REFERENCED TO NAVD 88.

NOTES:
1. SEE SHEET HV-18 AND HV-19 FOR CURVE DATA CHARTS

ADDENDA / REVISIONS

SCALE
0 100 200 300
FEET

CANTILEVER AND OVERHEAD SIGN STRUCTURES, I-95

CONTRACT	BRIDGE NO.	N/A
T201907002	DESIGNED BY: RMB	
COUNTY		
NEW CASTLE	CHECKED BY: JWS	

HORIZONTAL AND VERTICAL CONTROL

HV-10
SECTION
TY
SHEET NO.
16

8/13/2019
T:\Dover\Projects\425025.14\600_CADD\05_Official\HV10.dgn

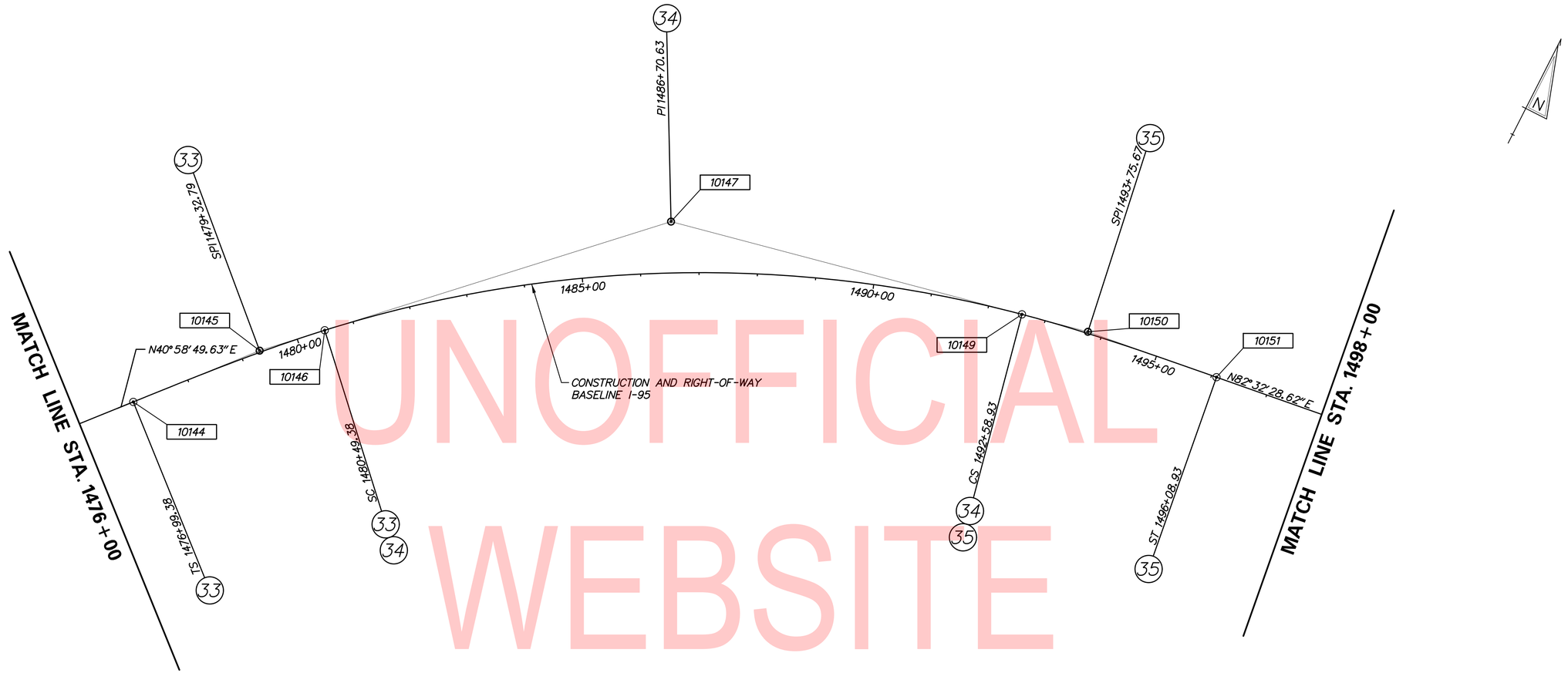

UNOFFICIAL WEBSITE COPY

DATUM REFERENCE:
HORIZONTAL - THIS PROJECT IS REFERENCED TO THE DELAWARE STATE PLANE COORDINATE SYSTEM (NAD 83/91).
VERTICAL - THIS PROJECT IS REFERENCED TO NAVD 88.

CLOTHOID CURVE NO. 33 – I-95 MAINLINE

Element: Clothold	STATION	NORTHING	EASTING
TS (10144)	1476+99.38	642786.3917	619539.3897
SPI (10145)	1479+32.79	642962.6060	619692.4649
SC (10146)	1480+49.38	643044.2189	619775.9336
Entrance Radius:	0.00		
Exit Radius:	2150.00		
Length:	350.00		
Angle:	4° 39′ 48.9684″ Right		
Constant:	867.47		
Long Tangent:	233.41		
Short Tangent:	116.74		
Long Chord:	349.90		
Xs:	349.77		
Ys:	9.49		
P:	2.37		
K:	174.96		
Tangent Direction:	N 40° 58′ 49.6287″ E		
Radial Direction:	S 49° 01′ 10.3713″ E		
Chord Direction:	N 42° 32′ 05.5122″ E		
Radial Direction:	S 44° 21′ 21.4029″ E		
Tangent Direction:	N 45° 38′ 38.5971″ E		

CIRCULAR CURVE NO. 34 – I-95 MAINLINE

Element: Circular	STATION	NORTHING	EASTING
SC (10146)	1480+49.38	643044.2189	619775.9336
PI (10147)	1486+70.63	643478.5426	620220.1331
CC (10148)		641506.9465	621279.0282
CS (10149)	1492+58.93	643609.0047	620827.5292
Radius:	2150.00		
Delta:	32° 14′ 01.0280″ Right		
Degree of Curvature(Arc):	2° 39′ 53.7119″		
Length:	1209.55		
Tangent:	621.25		
Chord:	1193.67		
Middle Ordinate:	84.50		
External:	87.96		
Tangent Direction:	N 45° 38′ 38.5971″ E		
Radial Direction:	S 44° 21′ 21.4029″ E		
Chord Direction:	N 61° 45′ 39.1111″ E		
Radial Direction:	S 12° 07′ 20.3749″ E		
Tangent Direction:	N 77° 52′ 39.6251″ E		

CLOTHOID CURVE NO. 35 – I-95 MAINLINE

Element: Clothold	STATION	NORTHING	EASTING
CS (10149)	1492+58.93	643609.0047	620827.5292
SPI (10150)	1493+75.67	643633.5201	620941.6664
ST (10151)	1496+08.93	643663.8200	621173.1057
Entrance Radius:	2150.00		
Exit Radius:	0.00		
Length:	350.00		
Angle:	4° 39′ 48.9959″ Right		
Constant:	867.47		
Long Tangent:	233.41		
Short Tangent:	116.74		
Long Chord:	349.90		
Xs:	349.77		
Ys:	9.49		
P:	2.37		
K:	174.96		
Tangent Direction:	N 77° 52′ 39.6251″ E		
Radial Direction:	S 12° 07′ 20.3749″ E		
Chord Direction:	N 80° 59′ 12.6029″ E		
Radial Direction:	S 7° 27′ 31.3790″ E		
Tangent Direction:	N 82° 32′ 28.6210″ E		

ADDENDA / REVISIONS

SCALE
0 100 200 300
FEET

CANTILEVER AND OVERHEAD SIGN STRUCTURES, I-95

CONTRACT	BRIDGE NO.	N/A
T201907002	DESIGNED BY: RMB	
COUNTY	CHECKED BY: JWS	
NEW CASTLE		

HORIZONTAL AND VERTICAL CONTROL

HV-11
SECTION
TY
SHEET NO.
17

8/13/2019
T:\Dover\Projects\425025.14\600_CADD\05_Official\HV11.dgn

HORIZONTAL / VERTICAL CONTROL DATA					
POINT	STATION	OFFSET	NORTHING	EASTING	ELEVATION
95D	N/A	N/A	644621.0402	623011.5164	200.97

CONSTRUCTION ALIGNMENT CONTROL				
POINT	STATION	OFFSET	NORTHING	EASTING
10160	1514+96.53	0.00	644408.3785	622839.2245

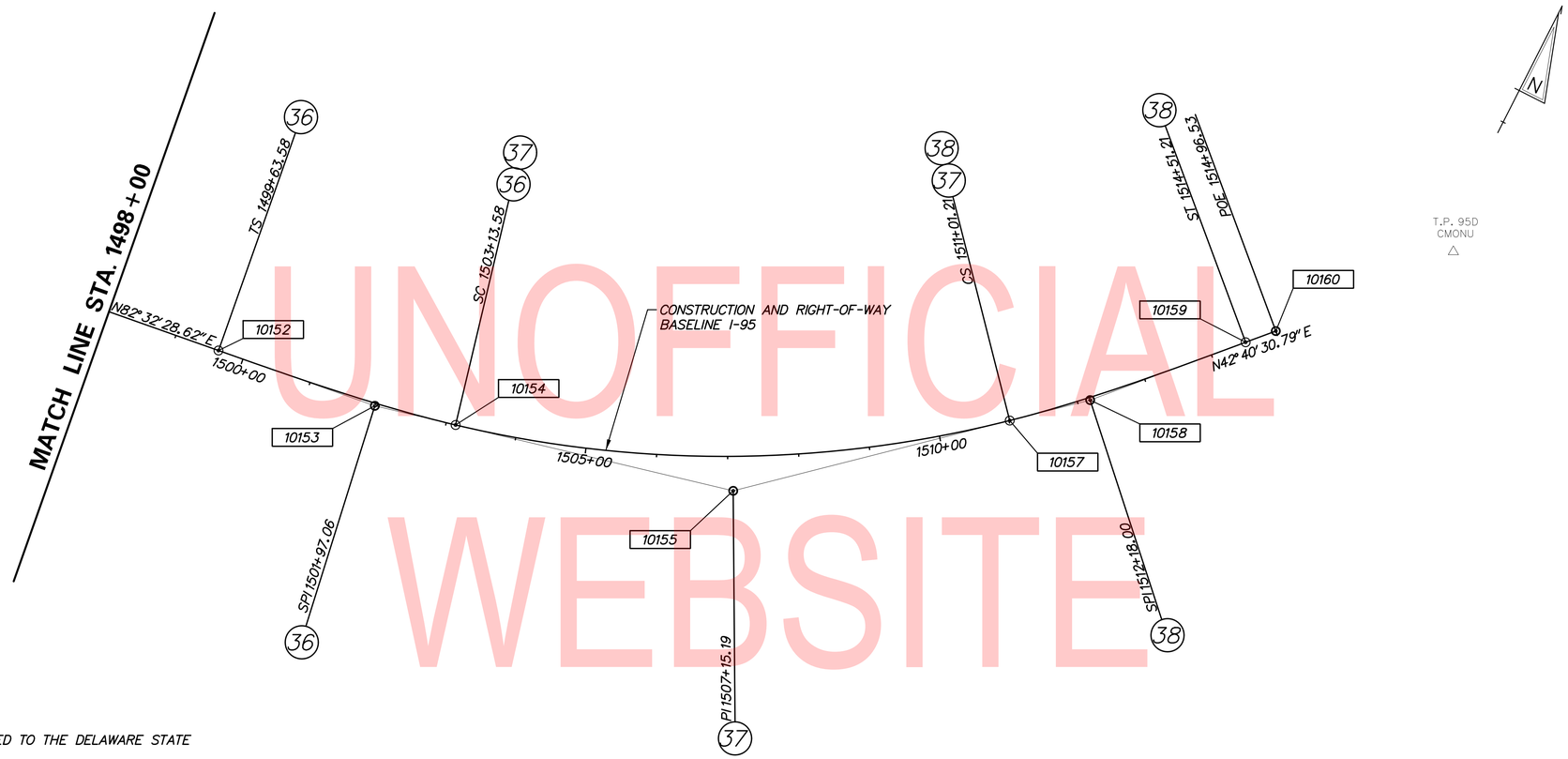

DATUM REFERENCE:
HORIZONTAL - THIS PROJECT IS REFERENCED TO THE DELAWARE STATE PLANE COORDINATE SYSTEM (NAD 83/91).
VERTICAL - THIS PROJECT IS REFERENCED TO NAVD 88.

CLOTHOID CURVE NO. 36 – I-95 MAINLINE

Element: Clothold	STATION	NORTHING	EASTING
TS (10152)	1499+63.58	643709.8580	621524.7566
SPI (10153)	1501+97.06	643740.1656	621756.2546
SC (10154)	1503+13.58	643767.6116	621869.7781
Entrance Radius:	0.00		
Exit Radius:	1635.00		
Length:	350.00		
Angle:	6° 07' 57.2728" Left		
Constant:	756.47		
Long Tangent:	233.47		
Short Tangent:	116.79		
Long Chord:	349.82		
Xs:	349.60		
Ys:	12.48		
P:	3.12		
K:	174.93		
Tangent Direction:	N 82° 32' 28.6210" E		
Radial Direction:	S 7° 27' 31.3790" E		
Chord Direction:	N 80° 29' 50.2439" E		
Radial Direction:	S 13° 35' 28.6519" E		
Tangent Direction:	N 76° 24' 31.3481" E		

CIRCULAR CURVE NO. 37 – I-95 MAINLINE

Element: Circular	STATION	NORTHING	EASTING
SC (10154)	1503+13.58	643767.6116	621869.7781
PI (10155)	1507+15.19	643861.9873	622260.1401
CC (10156)		645356.8262	621485.5623
CS (10157)	1511+01.21	644126.4813	622562.3521
Radius:	1635.00		
Delta:	27° 36' 03.2805" Left		
Degree of Curvature(Arc):	3° 30' 15.5845"		
Length:	787.62		
Tangent:	401.61		
Chord:	780.03		
Middle Ordinate:	47.20		
External:	48.60		
Tangent Direction:	N 76° 24' 31.3481" E		
Radial Direction:	S 13° 35' 28.6519" E		
Chord Direction:	N 62° 36' 29.7079" E		
Radial Direction:	S 41° 11' 31.9324" E		
Tangent Direction:	N 48° 48' 28.0676" E		

CLOTHOID CURVE NO. 38 – I-95 MAINLINE

Element: Clothold	STATION	NORTHING	EASTING
CS (10157)	1511+01.21	644126.4813	622562.3521
SPI (10158)	1512+18.00	644203.4004	622650.2402
ST (10159)	1514+51.21	644375.0519	622808.4983
Entrance Radius:	1635.00		
Exit Radius:	0.00		
Length:	350.00		
Angle:	6° 07' 57.2728" Left		
Constant:	756.47		
Long Tangent:	233.47		
Short Tangent:	116.79		
Long Chord:	349.82		
Xs:	349.60		
Ys:	12.48		
P:	3.12		
K:	174.93		
Tangent Direction:	N 48° 48' 28.0676" E		
Radial Direction:	S 41° 11' 31.9324" E		
Chord Direction:	N 44° 43' 09.1718" E		
Radial Direction:	S 47° 19' 29.2052" E		
Tangent Direction:	N 42° 40' 30.7948" E		

UNOFFICIAL WEBSITE COPY

ADDENDA / REVISIONS

SCALE 0 100 200 300 FEET

CANTILEVER AND OVERHEAD SIGN STRUCTURES, I-95

CONTRACT	BRIDGE NO.	N/A
T201907002	DESIGNED BY: RMB	
COUNTY	CHECKED BY: JWS	
NEW CASTLE		

HORIZONTAL AND VERTICAL CONTROL

HV-12
SECTION
TY
SHEET NO.
18

8/13/2019
T:\Dover\Projects\425025.14\600_CADD\05_Official\HV12.dgn

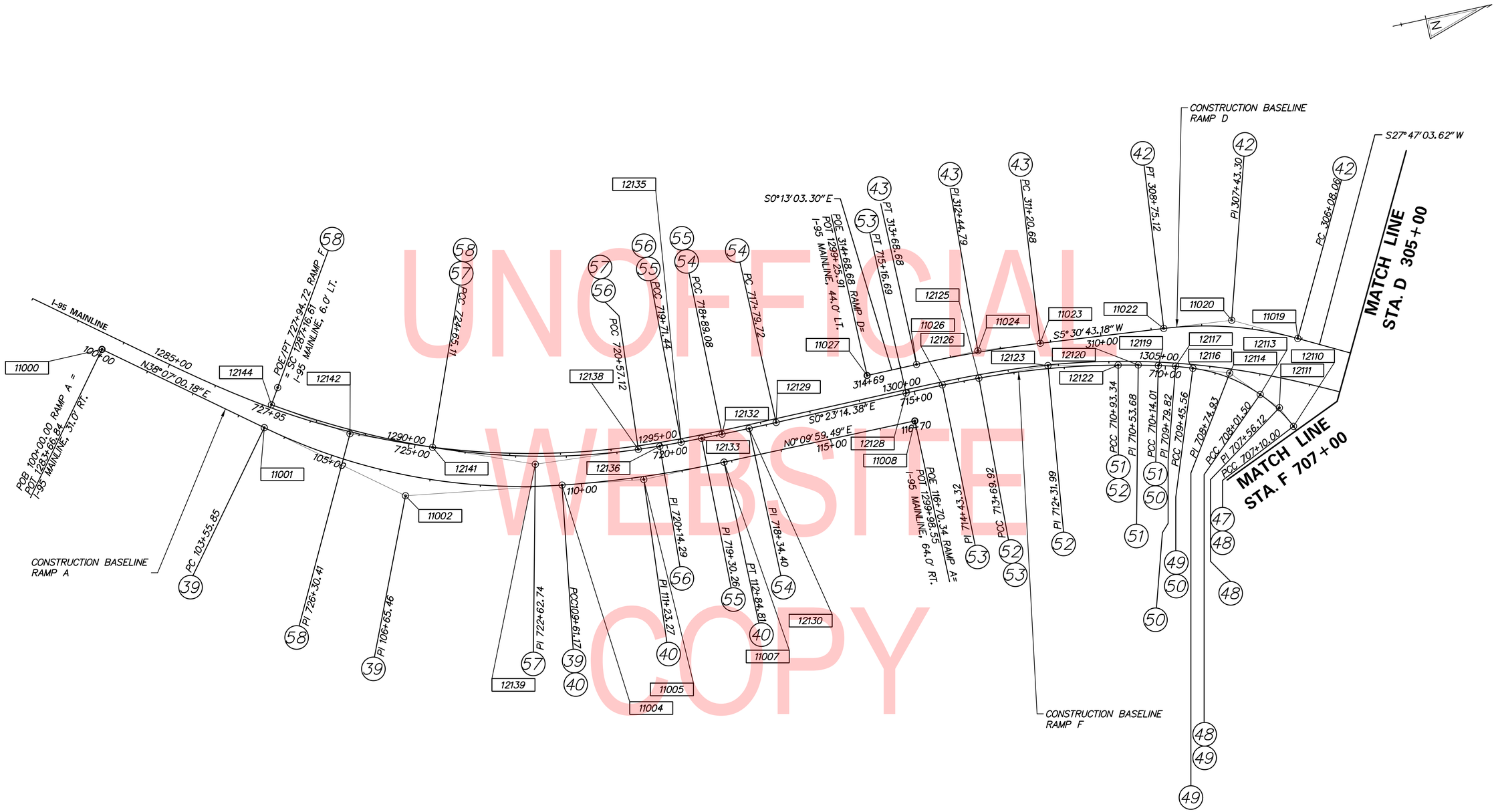

UNOFFICIAL WEBSITE COPY

CONSTRUCTION ALIGNMENT CONTROL				
POINT	STATION	OFFSET	NORTHING	EASTING
11000	A 100+00.00	0.00	631972.4332	614718.9447
11008	A 116+70.34	0.00	633510.2065	615200.6040
11027	D 314+68.68	0.00	633437.3439	615092.8786

DATUM REFERENCE:
HORIZONTAL - THIS PROJECT IS REFERENCED TO THE DELAWARE STATE PLANE COORDINATE SYSTEM (NAD 83/91).
VERTICAL - THIS PROJECT IS REFERENCED TO NAVD 88.

NOTES:
1. SEE SHEETS HV-20, HV-21 AND HV-22 FOR CURVE DATA CHARTS.
2. FOR CARDINAL STATIONS ALONG THE CONSTRUCTION BASELINE I-95 MAINLINE, SEE SHEETS HV-06 AND HV-07.

ADDENDA / REVISIONS

SCALE 0 100 200 300 FEET

CANTILEVER AND OVERHEAD SIGN STRUCTURES, I-95

CONTRACT	BRIDGE NO.	N/A
T201907002	DESIGNED BY: RMB	
COUNTY		
NEW CASTLE	CHECKED BY: JWS	

HORIZONTAL AND VERTICAL CONTROL

HV-13
SECTION TY
SHEET NO. 19

8/13/2019
T:\Dover\Projects\425025.14\600_CADD\05_Official\HV13.dgn

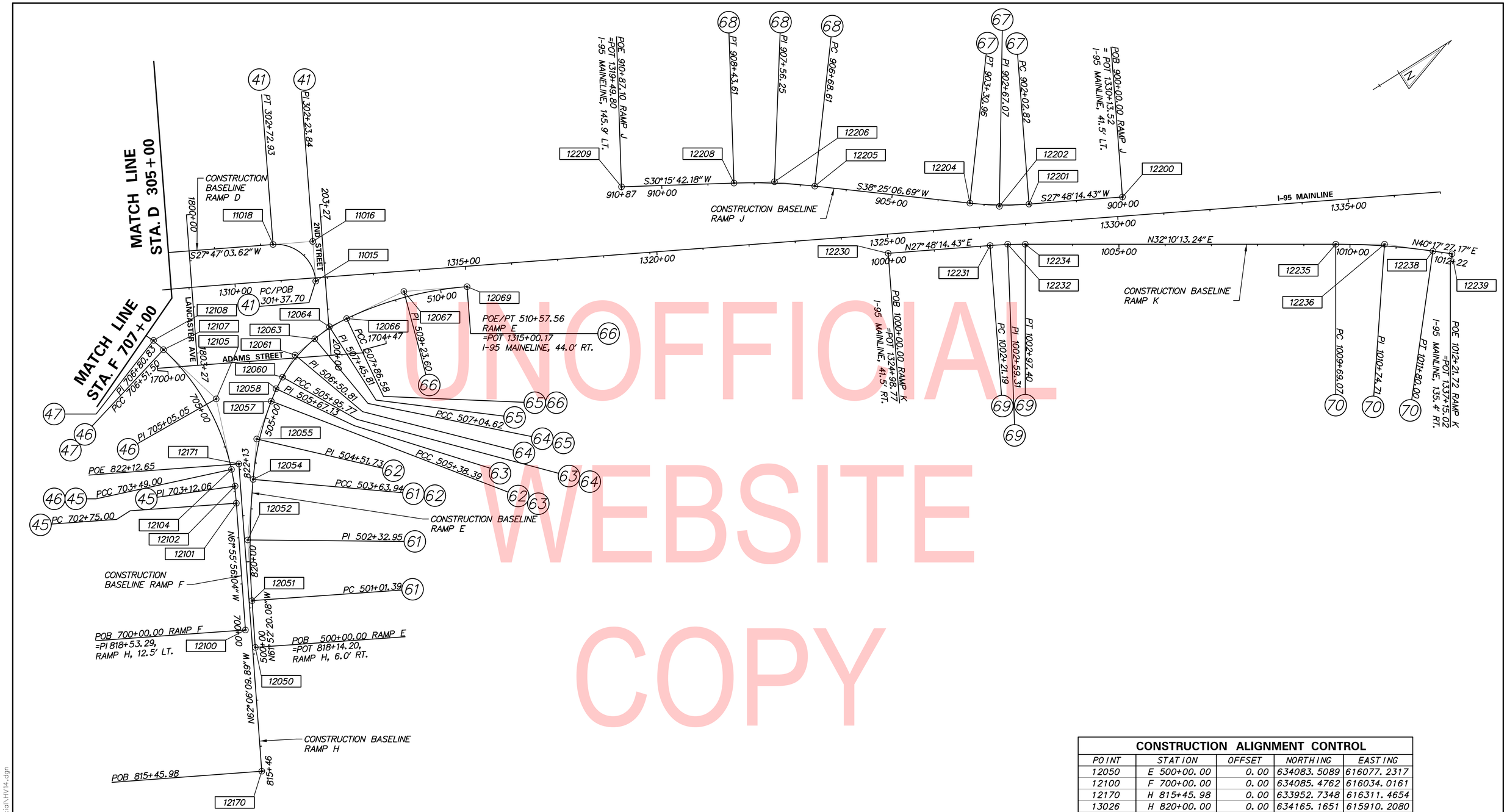

UNOFFICIAL WEBSITE COPY

CONSTRUCTION ALIGNMENT CONTROL				
POINT	STATION	OFFSET	NORTHING	EASTING
12050	E 500+00.00	0.00	634083.5089	616077.2317
12100	F 700+00.00	0.00	634085.4762	616034.0161
12170	H 815+45.98	0.00	633952.7348	616311.4654
13026	H 820+00.00	0.00	634165.1651	615910.2080
12171	H 822+12.65	0.00	634264.6591	615722.2746
12200	J 900+00.00	0.00	636190.5408	616251.3177
12209	J 910+87.10	0.00	635284.7234	615655.6553
12230	K 1000+00.00	0.00	635696.5038	616084.6307
13027	K 1005+00.00	0.00	636129.6440	616333.7575
12239	K 1012+21.72	0.00	636728.5203	616735.0484

DATUM REFERENCE:
HORIZONTAL - THIS PROJECT IS REFERENCED TO THE DELAWARE STATE PLANE COORDINATE SYSTEM (NAD 83/91).
VERTICAL - THIS PROJECT IS REFERENCED TO NAVD 88.

NOTES:
1. SEE SHEETS HV-23 AND HV-24 FOR CURVE DATA CHARTS.
2. FOR CARDINAL STATIONS ALONG THE CONSTRUCTION BASELINE I-95 MAINLINE, SEE SHEETS HV-07 AND HV-08.

ADDENDA / REVISIONS

SCALE 0 100 200 300 FEET

CANTILEVER AND OVERHEAD SIGN STRUCTURES, I-95

CONTRACT	BRIDGE NO.	N/A
T201907002	DESIGNED BY: RMB	
COUNTY		
NEW CASTLE	CHECKED BY: JWS	

HORIZONTAL AND VERTICAL CONTROL

HV-14
SECTION TY
SHEET NO. 20

8/13/2019
T:\Dover\Projects\425025.14.600_CADD\05_Official\HV14.dgn

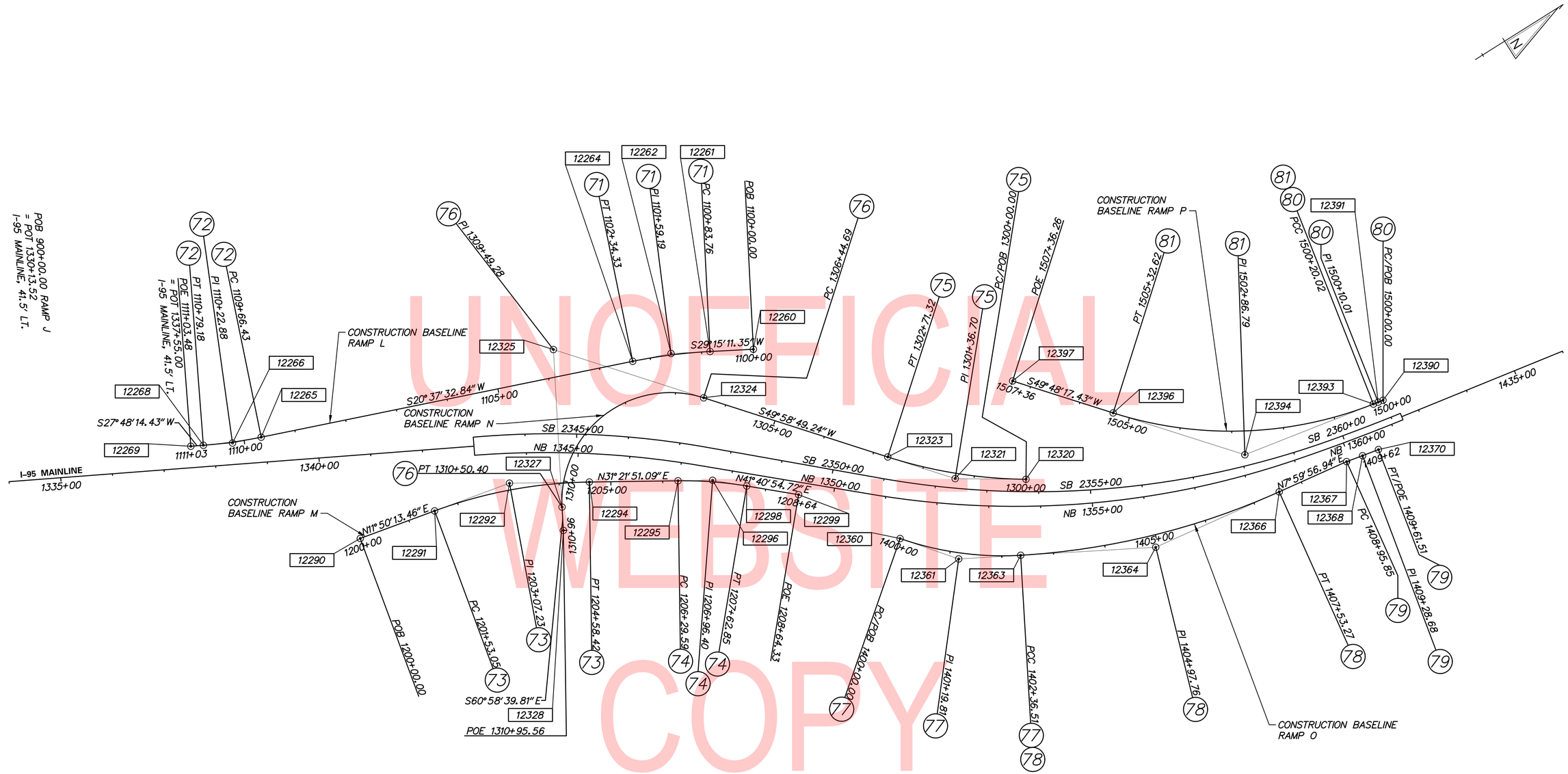

UNOFFICIAL WEBSITE COPY

CONSTRUCTION ALIGNMENT CONTROL				
POINT	STATION	OFFSET	NORTHING	EASTING
12260	L 1100+00.00	0.00	637865.3310	617016.9848
13028	L 1105+00.00	0.00	637407.2110	616819.0390
12269	L 1111+03.48	0.00	636846.4179	616597.1812
12290	M 1200+00.00	0.00	637028.5196	616922.0039
12299	M 1208+64.33	0.00	637789.7577	617301.0456
12328	N 1310+95.56	0.00	637368.6132	617117.6589
12397	P 1507+36.26	0.00	638256.3972	617335.1908

DATUM REFERENCE:
HORIZONTAL - THIS PROJECT IS REFERENCED TO THE DELAWARE STATE PLANE COORDINATE SYSTEM (NAD 83/91).
VERTICAL - THIS PROJECT IS REFERENCED TO NAVD 88.

NOTES:
1. SEE SHEETS HV-25 AND HV-26 FOR CURVE DATA CHARTS.
2. FOR CARDINAL STATIONS ALONG THE CONSTRUCTION BASELINE I-95 MAINLINE, SEE SHEETS HV-08 AND HV-09.

ADDENDA / REVISIONS

SCALE 0 100 200 300 FEET

CANTILEVER AND OVERHEAD SIGN STRUCTURES, I-95

CONTRACT	BRIDGE NO.	N/A
T201907002	DESIGNED BY: RMB	
COUNTY		
NEW CASTLE	CHECKED BY: JWS	

HORIZONTAL AND VERTICAL CONTROL

HV-15
SECTION TY
SHEET NO. 21

8/13/2019
T:\Dover\Projects\425025.14.600_CADD\05_Official\HV15.dgn

CLOTHOID CURVE NO. 9 – I-95 MAINLINE

	STATION	NORTHING	EASTING
Element: Clothold			
TS (10022)	1271+78.80	630954.4958	614149.2213
SPI (10023)	1273+78.90	631149.7791	614192.8838
SC (10024)	1274+78.80	631244.7941	614224.3674
Entrance Radius:	0.00		
Exit Radius:	1500.00		
Length:	300.00		
Angle:	5° 43′ 46.4806″ Right		
Constant:	670.82		
Long Tangent:	200.10		
Short Tangent:	100.10		
Long Chord:	299.87		
Xs:	299.70		
Ys:	9.99		
P:	2.50		
K:	149.95		
Tangent Direction:	N 12° 36′ 11.6002″ E		
Radial Direction:	S 77° 23′ 48.3998″ E		
Chord Direction:	N 14° 30′ 46.5115″ E		
Radial Direction:	S 71° 40′ 01.9192″ E		
Tangent Direction:	N 18° 19′ 58.0808″ E		

CIRCULAR CURVE NO. 10 – I-95 MAINLINE

	STATION	NORTHING	EASTING
Element: Circular			
SC (10024)	1274+78.80	631244.7941	614224.3674
PI (10025)	1276+63.69	631420.3087	614282.5248
CC (10026)		630772.9902	615648.2357
CS (10027)	1278+46.74	631576.4463	614381.5636
Radius:	1500.00		
Delta:	14° 03′ 15.6441″ Right		
Degree of Curvature(Arc):	3° 49′ 10.9871″		
Length:	367.94		
Tangent:	184.90		
Chord:	367.02		
Middle Ordinate:	11.27		
External:	11.35		
Tangent Direction:	N 18° 19′ 58.0808″ E		
Radial Direction:	S 71° 40′ 01.9192″ E		
Chord Direction:	N 25° 21′ 35.9029″ E		
Radial Direction:	S 57° 36′ 46.2751″ E		
Tangent Direction:	N 32° 23′ 13.7249″ E		

CLOTHOID CURVE NO. 11 – I-95 MAINLINE

	STATION	NORTHING	EASTING
Element: Clothold			
CS (10027)	1278+46.74	631576.4463	614381.5636
SPI (10028)	1279+46.83	631660.9716	614435.1784
ST (10029)	1281+46.74	631818.4051	614558.6962
Entrance Radius:	1500.00		
Exit Radius:	0.00		
Length:	300.00		
Angle:	5° 43′ 46.4806″ Right		
Constant:	670.82		
Long Tangent:	200.10		
Short Tangent:	100.10		
Long Chord:	299.87		
Xs:	299.70		
Ys:	9.99		
P:	2.50		
K:	149.95		
Tangent Direction:	N 32° 23′ 13.7249″ E		
Radial Direction:	S 57° 36′ 46.2751″ E		
Chord Direction:	N 36° 12′ 25.2942″ E		
Radial Direction:	S 51° 52′ 59.7945″ E		
Tangent Direction:	N 38° 07′ 00.2055″ E		

CLOTHOID CURVE NO. 12 – I-95 MAINLINE

	STATION	NORTHING	EASTING
Element: Clothold			
TS (10030)	1284+16.61	632030.7298	614725.2802
SPI (10031)	1286+16.72	632188.1633	614848.7980
SC (10032)	1287+16.61	632272.6886	614902.4128
Entrance Radius:	0.00		
Exit Radius:	1500.00		
Length:	300.00		
Angle:	5° 43′ 46.4806″ Left		
Constant:	670.82		
Long Tangent:	200.10		
Short Tangent:	100.10		
Long Chord:	299.87		
Xs:	299.70		
Ys:	9.99		
P:	2.50		
K:	149.95		
Tangent Direction:	N 38° 07′ 00.2055″ E		
Radial Direction:	S 51° 52′ 59.7945″ E		
Chord Direction:	N 36° 12′ 25.2942″ E		
Radial Direction:	S 57° 36′ 46.2751″ E		
Tangent Direction:	N 32° 23′ 13.7249″ E		

CIRCULAR CURVE NO. 13 – I-95 MAINLINE

	STATION	NORTHING	EASTING
Element: Circular			
SC (10032)	1287+16.61	632272.6886	614902.4128
PI (10033)	1290+75.00	632575.3305	615094.3800
CC (10034)		633076.1447	613635.7407
CS (10035)	1294+20.20	632932.0634	615128.8048
Radius:	1500.00		
Delta:	26° 52′ 30.5407″ Left		
Degree of Curvature(Arc):	3° 49′ 10.9871″		
Length:	703.59		
Tangent:	358.39		
Chord:	697.16		
Middle Ordinate:	41.06		
External:	42.22		
Tangent Direction:	N 32° 23′ 13.7249″ E		
Radial Direction:	S 57° 36′ 46.2751″ E		
Chord Direction:	N 18° 56′ 58.4546″ E		
Radial Direction:	S 84° 29′ 16.8158″ E		
Tangent Direction:	N 5° 30′ 43.1842″ E		

CLOTHOID CURVE NO. 14 – I-95 MAINLINE

	STATION	NORTHING	EASTING
Element: Clothold			
CS (10035)	1294+20.20	632932.0634	615128.8048
SPI (10036)	1295+20.30	633031.6960	615138.4194
ST (10037)	1297+20.20	633231.7994	615137.6595
Entrance Radius:	1500.00		
Exit Radius:	0.00		
Length:	300.00		
Angle:	5° 43′ 46.4806″ Left		
Constant:	670.82		
Long Tangent:	200.10		
Short Tangent:	100.10		
Long Chord:	299.87		
Xs:	299.70		
Ys:	9.99		
P:	2.50		
K:	149.95		
Tangent Direction:	N 5° 30′ 43.1842″ E		
Radial Direction:	S 84° 29′ 16.8158″ E		
Chord Direction:	N 1° 41′ 31.6149″ E		
Radial Direction:	N 89° 46′ 56.7036″ E		
Tangent Direction:	N 0° 13′ 03.2964″ W		

NOTES:
1. SEE SHEET HV-06 FOR BASELINES.

UNOFFICIAL WEBSITE COPY

ADDENDA / REVISIONS

NOT TO SCALE

CANTILEVER AND OVERHEAD SIGN STRUCTURES, I-95

CONTRACT T201907002 | COUNTY NEW CASTLE | BRIDGE NO. N/A | DESIGNED BY: RMB | CHECKED BY: JWS

HORIZONTAL AND VERTICAL CONTROL

HV-16 | SECTION TY | SHEET NO. 22

CIRCULAR CURVE NO. 18 – I-95 NB

		STATION	NORTHING	EASTING
Element: Circular				
PC	(10060)	1343+00.00	637300.9763	616903.5840
PI	(10061)	1345+17.60	637493.4580	617005.0853
CC	(10062)		636466.9663	618485.1564
PT	(10063)	1347+33.08	637655.9756	617149.7910
Radius:		1788.0000		
Delta:		13° 52′ 40.2881″ Right		
Degree of Curvature(Arc):		3° 12′ 16.0630″		
Length:		433.0792		
Tangent:		217.6045		
Chord:		432.0213		
Middle Ordinate:		13.0962		
External:		13.1929		
Tangent Direction:		N 27° 48′ 14.4301″ E		
Radial Direction:		S 62° 11′ 45.5699″ E		
Chord Direction:		N 34° 44′ 34.5741″ E		
Radial Direction:		S 48° 19′ 05.2818″ E		
Tangent Direction:		N 41° 40′ 54.7182″ E		

CIRCULAR CURVE NO. 19 – I-95 NB

		STATION	NORTHING	EASTING
Element: Circular				
PC	(10064)	1350+74.09	637910.6596	617376.5615
PI	(10065)	1354+94.06	638224.3133	617655.8388
CC	(10066)		639022.5296	616127.8305
PCC	(10067)	1358+97.01	638632.7092	617753.7531
Radius:		1672.0000		
Delta:		28° 11′ 58.1852″ Left		
Degree of Curvature(Arc):		3° 25′ 36.4119″		
Length:		822.9150		
Tangent:		419.9696		
Chord:		814.6343		
Middle Ordinate:		50.3722		
External:		51.9369		
Tangent Direction:		N 41° 40′ 54.7182″ E		
Radial Direction:		S 48° 19′ 05.2818″ E		
Chord Direction:		N 27° 34′ 55.6255″ E		
Radial Direction:		S 76° 31′ 03.4671″ E		
Tangent Direction:		N 13° 28′ 56.5329″ E		

CIRCULAR CURVE NO. 20 – I-95 NB

		STATION	NORTHING	EASTING
Element: Circular				
PCC	(10067)	1358+97.01	638632.7092	617753.7531
PI	(10068)	1360+10.26	638742.8381	617780.1568
CC	(10069)		639501.0179	614132.0780
PT	(10070)	1361+23.44	638854.3678	617799.8203
Radius:		3724.3107		
Delta:		3° 29′ 00.4475″ Left		
Degree of Curvature(Arc):		1° 32′ 18.3351″		
Length:		226.4299		
Tangent:		113.2498		
Chord:		226.3950		
Middle Ordinate:		1.7207		
External:		1.7215		
Tangent Direction:		N 13° 28′ 56.5329″ E		
Radial Direction:		S 76° 31′ 03.4671″ E		
Chord Direction:		N 11° 44′ 26.3092″ E		
Radial Direction:		S 80° 00′ 03.9145″ E		
Tangent Direction:		N 9° 59′ 56.0855″ E		

CIRCULAR CURVE NO. 21 – I-95 SB

		STATION	NORTHING	EASTING
Element: Circular				
PC	(10080)	2343+21.85	637336.6271	616882.8155
PI	(10081)	2345+38.94	637528.6548	616984.0774
CC	(10082)		636538.0672	618397.1623
PT	(10083)	2347+53.72	637689.3300	617130.0640
Radius:		1712.0000		
Delta:		14° 27′ 13.3674″ Right		
Degree of Curvature(Arc):		3° 20′ 48.1779″		
Length:		431.8775		
Tangent:		217.0912		
Chord:		430.7332		
Middle Ordinate:		13.6004		
External:		13.7093		
Tangent Direction:		N 27° 48′ 14.4301″ E		
Radial Direction:		S 62° 11′ 45.5699″ E		
Chord Direction:		N 35° 01′ 51.1138″ E		
Radial Direction:		S 47° 44′ 32.2025″ E		
Tangent Direction:		N 42° 15′ 27.7975″ E		

CIRCULAR CURVE NO. 22 – I-95 SB

		STATION	NORTHING	EASTING
Element: Circular				
PC	(10084)	2350+92.60	637940.1416	617357.9468
PI	(10085)	2355+50.47	638279.0215	617665.8468
CC	(10086)		639080.6446	616102.6902
PCC	(10087)	2359+87.01	638726.8130	617761.3702
Radius:		1696.0000		
Delta:		30° 12′ 56.8719″ Left		
Degree of Curvature(Arc):		3° 22′ 41.8400″		
Length:		894.4113		
Tangent:		457.8668		
Chord:		884.0828		
Middle Ordinate:		58.6193		
External:		60.7180		
Tangent Direction:		N 42° 15′ 27.7466″ E		
Radial Direction:		S 47° 44′ 32.2534″ E		
Chord Direction:		N 27° 08′ 59.3106″ E		
Radial Direction:		S 77° 57′ 29.1253″ E		
Tangent Direction:		N 12° 02′ 30.8747″ E		

CIRCULAR CURVE NO. 23 – I-95 SB

		STATION	NORTHING	EASTING
Element: Circular				
PCC	(10087)	2359+87.01	638726.8130	617761.3702
PI	(10088)	2360+53.18	638791.5247	617775.1746
CC	(10089)		639501.0179	614132.0780
PT	(10090)	2361+19.33	638856.6875	617786.6633
Radius:		3710.9507		
Delta:		2° 02′ 34.7892″ Left		
Degree of Curvature(Arc):		1° 32′ 38.2740″		
Length:		132.3215		
Tangent:		66.1677		
Chord:		132.3144		
Middle Ordinate:		0.5898		
External:		0.5899		
Tangent Direction:		N 12° 02′ 30.8747″ E		
Radial Direction:		S 77° 57′ 29.1253″ E		
Chord Direction:		N 11° 01′ 13.4801″ E		
Radial Direction:		S 80° 00′ 03.9145″ E		
Tangent Direction:		N 9° 59′ 56.0855″ E		

NOTES:
1. SEE SHEET HV-08 AND HV-09 FOR BASELINES.

UNOFFICIAL WEBSITE COPY

8/13/2019
T:\Dover\Projects\425025.14\600_CADD\05_Official\HV17.dgn

ADDENDA / REVISIONS	NOT TO SCALE	CANTILEVER AND OVERHEAD SIGN STRUCTURES, I-95	CONTRACT T201907002	BRIDGE NO. N/A	HORIZONTAL AND VERTICAL CONTROL	HV-17
			COUNTY NEW CASTLE	DESIGNED BY: RMB		SECTION TY
				CHECKED BY: JWS		SHEET NO. 23

CIRCULAR CURVE NO. 24 – I-95 NB

		STATION	NORTHING	EASTING
Element: Circular				
PC	(10100)	1451+52.18	640712.7766	618127.7113
PI	(10101)	1451+97.22	640757.1337	618135.5318
CC	(10102)		637083.5705	638712.2532
PCC	(10103)	1452+42.26	640801.4566	618143.5433
Radius:		20902.0215		
Delta:		0° 14′ 48.9471″ Right		
Degree of Curvature(Arc):		0° 16′ 26.8175″		
Length:		90.0822		
Tangent:		45.0412		
Chord:		90.0821		
Middle Ordinate:		0.0485		
External:		0.0485		
Tangent Direction:		N 9° 59′ 56.0737″ E		
Radial Direction:		S 80° 00′ 03.9263″ E		
Chord Direction:		N 10° 07′ 20.5473″ E		
Radial Direction:		S 79° 45′ 14.9792″ E		
Tangent Direction:		N 10° 14′ 45.0208″ E		

CIRCULAR CURVE NO. 25 – I-95 NB

		STATION	NORTHING	EASTING
Element: Circular				
PCC	(10103)	1452+42.26	640801.4566	618143.5433
PI	(10104)	1452+79.23	640837.8318	618150.1183
CC	(10105)		640427.6712	620211.4613
PCC	(10106)	1453+16.18	640873.9533	618157.9685
Radius:		2101.4281		
Delta:		2° 00′ 55.7491″ Right		
Degree of Curvature(Arc):		2° 43′ 35.4587″		
Length:		73.9217		
Tangent:		36.9646		
Chord:		73.9178		
Middle Ordinate:		0.3250		
External:		0.3251		
Tangent Direction:		N 10° 14′ 45.0208″ E		
Radial Direction:		S 79° 45′ 14.9792″ E		
Chord Direction:		N 11° 15′ 12.8954″ E		
Radial Direction:		S 77° 44′ 19.2301″ E		
Tangent Direction:		N 12° 15′ 40.7699″ E		

CIRCULAR CURVE NO. 26 – I-95 NB

		STATION	NORTHING	EASTING
Element: Circular				
PCC	(10106)	1453+16.18	640873.9533	618157.9685
PI	(10107)	1456+87.06	641236.3645	618236.7307
CC	(10108)		640531.4638	619733.8770
PCC	(10109)	1460+45.25	641527.9620	618465.8952
Radius:		1612.6954		
Delta:		25° 54′ 08.0571″ Right		
Degree of Curvature(Arc):		3° 33′ 10.0660″		
Length:		729.0663		
Tangent:		370.8712		
Chord:		722.8736		
Middle Ordinate:		41.0244		
External:		42.0952		
Tangent Direction:		N 12° 15′ 40.7691″ E		
Radial Direction:		S 77° 44′ 19.2309″ E		
Chord Direction:		N 25° 12′ 44.7976″ E		
Radial Direction:		S 51° 50′ 11.1738″ E		
Tangent Direction:		N 38° 09′ 48.8262″ E		

CIRCULAR CURVE NO. 27 – I-95 NB

		STATION	NORTHING	EASTING
Element: Circular				
PCC	(10109)	1460+45.25	641527.9620	618465.8952
PI	(10110)	1461+53.86	641613.3528	618533.0032
CC	(10111)		638504.3398	622313.2657
PCC	(10112)	1462+62.43	641695.6821	618603.8337
Radius:		4893.3170		
Delta:		2° 32′ 34.4193″ Right		
Degree of Curvature(Arc):		1° 10′ 15.2349″		
Length:		217.1746		
Tangent:		108.6051		
Chord:		217.1568		
Middle Ordinate:		1.2048		
External:		1.2051		
Tangent Direction:		N 38° 09′ 48.8259″ E		
Radial Direction:		S 51° 50′ 11.1741″ E		
Chord Direction:		N 39° 26′ 06.0356″ E		
Radial Direction:		S 49° 17′ 36.7548″ E		
Tangent Direction:		N 40° 42′ 23.2452″ E		

CIRCULAR CURVE NO. 28 – I-95 NB

		STATION	NORTHING	EASTING
Element: Circular				
PCC	(10112)	1462+62.43	641695.6821	618603.8337
PI	(10113)	1463+16.08	641736.3563	618638.8271
CC	(10114)		627060.1097	635615.3782
PT	(10115)	1463+69.74	641776.8627	618674.0145
Radius:		22440.8695		
Delta:		0° 16′ 26.3469″ Right		
Degree of Curvature(Arc):		0° 15′ 19.1480″		
Length:		107.3110		
Tangent:		53.6556		
Chord:		107.3109		
Middle Ordinate:		0.0641		
External:		0.0641		
Tangent Direction:		N 40° 42′ 23.2453″ E		
Radial Direction:		S 49° 17′ 36.7547″ E		
Chord Direction:		N 40° 50′ 36.4187″ E		
Radial Direction:		S 49° 01′ 10.4078″ E		
Tangent Direction:		N 40° 58′ 49.5922″ E		

UNOFFICIAL WEBSITE COPY

NOTES:
1. SEE SHEET HV-09 AND HV-10 FOR BASELINES.

CIRCULAR CURVE NO. 29 – I-95 SB

		STATION	NORTHING	EASTING
Element: Circular				
PC	(10120)	2451+52.18	640715.0599	618114.7610
PI	(10121)	2452+82.70	640843.5960	618137.4229
CC	(10122)		640172.0936	621194.4188
PCC	(10123)	2454+13.07	640969.7967	618170.7168
Radius:		3127.1559		
Delta:		4° 46′ 47.8235″ Right		
Degree of Curvature(Arc):		1° 49′ 55.9234″		
Length:		260.8857		
Tangent:		130.5186		
Chord:		260.8101		
Middle Ordinate:		2.7202		
External:		2.7226		
Tangent Direction:		N 9° 59′ 56.0737″ E		
Radial Direction:		S 80° 00′ 03.9263″ E		
Chord Direction:		N 12° 23′ 19.9855″ E		
Radial Direction:		S 75° 13′ 16.1028″ E		
Tangent Direction:		N 14° 46′ 43.8972″ E		

CIRCULAR CURVE NO. 30 – I-95 SB

		STATION	NORTHING	EASTING
Element: Circular				
PCC	(10123)	2454+13.07	640969.7967	618170.7168
PI	(10124)	2457+13.56	641260.3501	618247.3696
CC	(10125)		640560.9252	619720.5484
PCC	(10126)	2460+07.16	641503.4081	618424.0608
Radius:		1602.8581		
Delta:		21° 14′ 11.2325″ Right		
Degree of Curvature(Arc):		3° 34′ 28.5633″		
Length:		594.0930		
Tangent:		300.4945		
Chord:		590.6982		
Middle Ordinate:		27.4461		
External:		27.9242		
Tangent Direction:		N 14° 46′ 43.8972″ E		
Radial Direction:		S 75° 13′ 16.1028″ E		
Chord Direction:		N 25° 23′ 49.5134″ E		
Radial Direction:		S 53° 59′ 04.8703″ E		
Tangent Direction:		N 36° 00′ 55.1297″ E		

CIRCULAR CURVE NO. 31 – I-95 SB

		STATION	NORTHING	EASTING
Element: Circular				
PCC	(10126)	2460+07.16	641503.4081	618424.0608
PI	(10127)	2460+82.30	641564.1885	618468.2452
CC	(10128)		640296.5083	620084.2826
PCC	(10129)	2461+57.38	641621.5754	618516.7556
Radius:		2052.5456		
Delta:		4° 11′ 35.8871″ Right		
Degree of Curvature(Arc):		2° 47′ 29.2193″		
Length:		150.2195		
Tangent:		75.1433		
Chord:		150.1860		
Middle Ordinate:		1.3741		
External:		1.3750		
Tangent Direction:		N 36° 00′ 55.1297″ E		
Radial Direction:		S 53° 59′ 04.8703″ E		
Chord Direction:		N 38° 06′ 43.0732″ E		
Radial Direction:		S 49° 47′ 28.9833″ E		
Tangent Direction:		N 40° 12′ 31.0167″ E		

CIRCULAR CURVE NO. 32 – I-95 SB

		STATION	NORTHING	EASTING
Element: Circular				
PCC	(10129)	2461+57.38	641621.5754	618516.7556
PI	(10130)	2462+14.37	641665.1000	618553.5481
CC	(10131)		636159.1605	624978.6795
PT	(10132)	2462+71.36	641708.1251	618590.9234
Radius:		8461.3495		
Delta:		0° 46′ 18.5754″ Right		
Degree of Curvature(Arc):		0° 40′ 37.7294″		
Length:		113.9821		
Tangent:		56.9919		
Chord:		113.9812		
Middle Ordinate:		0.1919		
External:		0.1919		
Tangent Direction:		N 40° 12′ 31.0167″ E		
Radial Direction:		S 49° 47′ 28.9833″ E		
Chord Direction:		N 40° 35′ 40.3045″ E		
Radial Direction:		S 49° 01′ 10.4078″ E		
Tangent Direction:		N 40° 58′ 49.5922″ E		

UNOFFICIAL WEBSITE COPY

NOTES:
1. *SEE SHEET HV-09 AND HV-10 FOR BASELINES.*

CIRCULAR CURVE NO. 39 – RAMP A

		STATION	NORTHING	EASTING
Element: Circular				
PC	(11001)	103+55.85	632252.3993	614938.5982
PI	(11002)	106+65.46	632495.9847	615129.7083
CC	(11003)		632973.9827	614018.8816
PCC	(11004)	109+61.17	632802.2326	615175.1960
Radius:		1169.0000		
Delta:		29° 40′ 05.5568″ Left		
Degree of Curvature(Arc):		4° 54′ 04.5514″		
Length:		605.3175		
Tangent:		309.6077		
Chord:		598.5776		
Middle Ordinate:		38.9614		
External:		40.3047		
Tangent Direction:		N 38° 07′ 00.1814″ E		
Radial Direction:		S 51° 52′ 59.8186″ E		
Chord Direction:		N 23° 16′ 57.4030″ E		
Radial Direction:		S 81° 33′ 05.3754″ E		
Tangent Direction:		N 8° 26′ 54.6246″ E		

CIRCULAR CURVE NO. 40 – RAMP A

		STATION	NORTHING	EASTING
Element: Circular				
PCC	(11004)	109+61.17	632802.2326	615175.1960
PI	(11005)	111+23.27	632962.5772	615199.0123
CC	(11006)		633131.1876	612960.4929
PT	(11007)	112+84.81	633124.6802	615199.4835
Radius:		2239.0000		
Delta:		8° 16′ 55.1376″ Left		
Degree of Curvature(Arc):		2° 33′ 32.3629″		
Length:		323.6427		
Tangent:		162.1037		
Chord:		323.3610		
Middle Ordinate:		5.8452		
External:		5.8605		
Tangent Direction:		N 8° 26′ 54.6246″ E		
Radial Direction:		S 81° 33′ 05.3754″ E		
Chord Direction:		N 4° 18′ 27.0558″ E		
Radial Direction:		S 89° 50′ 00.5130″ E		
Tangent Direction:		N 0° 09′ 59.4870″ E		

CIRCULAR CURVE NO. 42 – RAMP D

		STATION	NORTHING	EASTING
Element: Circular				
PC	(11019)	306+08.06	634283.6584	615203.5646
PI	(11020)	307+43.30	634164.0153	615140.5257
CC	(11021)		633963.4169	615811.3593
PT	(11022)	308+75.12	634029.4061	615127.5359
Radius:		687.0000		
Delta:		22° 16′ 20.4372″ Left		
Degree of Curvature(Arc):		8° 20′ 23.9893″		
Length:		267.0546		
Tangent:		135.2345		
Chord:		265.3763		
Middle Ordinate:		12.9356		
External:		13.1838		
Tangent Direction:		S 27° 47′ 03.6214″ W		
Radial Direction:		N 62° 12′ 56.3786″ W		
Chord Direction:		S 16° 38′ 53.4028″ W		
Radial Direction:		N 84° 29′ 16.8158″ W		
Tangent Direction:		S 5° 30′ 43.1842″ W		

CIRCULAR CURVE NO. 43 – RAMP D

		STATION	NORTHING	EASTING
Element: Circular				
PC	(11023)	311+20.68	633784.9753	615103.9482
PI	(11024)	312+44.79	633661.4457	615092.0276
CC	(11025)		633546.7610	617572.4810
PT	(11026)	313+68.68	633537.3432	615092.4989
Radius:		2480.0000		
Delta:		5° 43′ 46.4806″ Left		
Degree of Curvature(Arc):		2° 18′ 37.1293″		
Length:		248.0000		
Tangent:		124.1034		
Chord:		247.8967		
Middle Ordinate:		3.0994		
External:		3.1032		
Tangent Direction:		S 5° 30′ 43.1842″ W		
Radial Direction:		N 84° 29′ 16.8158″ W		
Chord Direction:		S 2° 38′ 49.9439″ W		
Radial Direction:		S 89° 46′ 56.7036″ W		
Tangent Direction:		S 0° 13′ 03.2964″ E		

UNOFFICIAL WEBSITE COPY

NOTES:
1. SEE SHEETS HV-13 FOR BASELINES.

ADDENDA / REVISIONS

NOT TO SCALE

CANTILEVER AND OVERHEAD SIGN STRUCTURES, I-95

CONTRACT	BRIDGE NO.	N/A
T201907002	DESIGNED BY: RMB	
COUNTY		
NEW CASTLE	CHECKED BY: JWS	

HORIZONTAL AND VERTICAL CONTROL

HV-20
SECTION
TY
SHEET NO.
26

8/13/2019
T:\Dover\Projects\425025.14\600_CADD\05_Official\HV20.dgn

CIRCULAR CURVE NO. 41 – RAMP D

		STATION	NORTHING	EASTING
Element: Circular				
PC	(11015)	301+37.70	634616.0870	615476.0804
PI	(11016)	302+23.84	634656.3609	615399.9381
CC	(11017)		634540.0661	615435.8706
PT	(11018)	302+72.93	634580.1546	615359.7857
Radius:		86.0000		
Delta:		90° 05′ 28.9002″ Left		
Degree of Curvature(Arc):		66° 37′ 22.7980″		
Length:		135.2256		
Tangent:		86.1372		
Chord:		121.7193		
Middle Ordinate:		25.2373		
External:		35.7194		
Tangent Direction:		N 62° 07′ 27.4784″ W		
Radial Direction:		N 27° 52′ 32.5216″ E		
Chord Direction:		S 72° 49′ 48.0715″ W		
Radial Direction:		N 62° 12′ 56.3786″ W		
Tangent Direction:		S 27° 47′ 03.6214″ W		

CIRCULAR CURVE NO. 48 – RAMP F

		STATION	NORTHING	EASTING
Element: Circular				
PCC	(12110)	707+10.00	634238.4033	615371.2634
PI	(12111)	707+56.12	634218.9429	615329.4484
CC	(12112)		633971.4021	615495.5237
PCC	(12113)	708+01.50	634187.6305	615295.5849
Radius:		294.5000		
Delta:		17° 48′ 05.6699″ Left		
Degree of Curvature(Arc):		19° 27′ 18.9834″		
Length:		91.5000		
Tangent:		46.1216		
Chord:		91.1324		
Middle Ordinate:		3.5464		
External:		3.5897		
Tangent Direction:		S 65° 02′ 35.1624″ W		
Radial Direction:		N 24° 57′ 24.8376″ W		
Chord Direction:		S 56° 08′ 32.3275″ W		
Radial Direction:		N 42° 45′ 30.5074″ W		
Tangent Direction:		S 47° 14′ 29.4926″ W		

CIRCULAR CURVE NO. 49 – RAMP F

		STATION	NORTHING	EASTING
Element: Circular				
PCC	(12113)	708+01.50	634187.6305	615295.5849
PI	(12114)	708+74.93	634137.7798	615241.6727
CC	(12115)		633965.8954	615500.6155
PCC	(12116)	709+45.56	634068.7411	615216.6670
Radius:		302.0000		
Delta:		27° 19′ 52.3958″ Left		
Degree of Curvature(Arc):		18° 58′ 19.6047″		
Length:		144.0600		
Tangent:		73.4277		
Chord:		142.6980		
Middle Ordinate:		8.5493		
External:		8.7984		
Tangent Direction:		S 47° 14′ 29.4926″ W		
Radial Direction:		N 42° 45′ 30.5074″ W		
Chord Direction:		S 33° 34′ 33.2947″ W		
Radial Direction:		N 70° 05′ 22.9032″ W		
Tangent Direction:		S 19° 54′ 37.0968″ W		

CIRCULAR CURVE NO. 50 – RAMP F

		STATION	NORTHING	EASTING
Element: Circular				
PCC	(12116)	709+45.56	634068.7411	615216.6670
PI	(12117)	709+79.82	634036.5337	615205.0015
CC	(12118)		633846.0223	615831.5754
PCC	(12119)	710+14.01	634003.2838	615196.7645
Radius:		654.0000		
Delta:		5° 59′ 47.6094″ Left		
Degree of Curvature(Arc):		8° 45′ 38.9612″		
Length:		68.4474		
Tangent:		34.2550		
Chord:		68.4162		
Middle Ordinate:		0.8953		
External:		0.8965		
Tangent Direction:		S 19° 54′ 37.0968″ W		
Radial Direction:		N 70° 05′ 22.9032″ W		
Chord Direction:		S 16° 54′ 43.2920″ W		
Radial Direction:		N 76° 05′ 10.5127″ W		
Tangent Direction:		S 13° 54′ 49.4873″ W		

CIRCULAR CURVE NO. 51 – RAMP F

		STATION	NORTHING	EASTING
Element: Circular				
PCC	(12119)	710+14.01	634003.2838	615196.7645
PI	(12120)	710+53.68	633964.7771	615187.2253
CC	(12121)		633427.3798	617521.4924
PCC	(12122)	710+93.34	633925.9756	615178.9666
Radius:		2395.0000		
Delta:		1° 53′ 52.4963″ Left		
Degree of Curvature(Arc):		2° 23′ 32.3092″		
Length:		79.3341		
Tangent:		39.6707		
Chord:		79.3305		
Middle Ordinate:		0.3285		
External:		0.3285		
Tangent Direction:		S 13° 54′ 49.4873″ W		
Radial Direction:		N 76° 05′ 10.5127″ W		
Chord Direction:		S 12° 57′ 53.2392″ W		
Radial Direction:		N 77° 59′ 03.0089″ W		
Tangent Direction:		S 12° 00′ 56.9911″ W		

CIRCULAR CURVE NO. 52 – RAMP F

		STATION	NORTHING	EASTING
Element: Circular				
PCC	(12122)	710+93.34	633925.9756	615178.9666
PI	(12123)	712+31.99	633790.3694	615150.1034
CC	(12124)		633597.1376	616723.9286
PCC	(12125)	713+69.92	633651.8086	615145.3048
Radius:		1579.5702		
Delta:		10° 01′ 56.4653″ Left		
Degree of Curvature(Arc):		3° 37′ 38.2866″		
Length:		276.5789		
Tangent:		138.6439		
Chord:		276.2257		
Middle Ordinate:		6.0497		
External:		6.0729		
Tangent Direction:		S 12° 00′ 56.9911″ W		
Radial Direction:		N 77° 59′ 03.0089″ W		
Chord Direction:		S 6° 59′ 58.7584″ W		
Radial Direction:		N 88° 00′ 59.4742″ W		
Tangent Direction:		S 1° 59′ 00.5258″ W		

CIRCULAR CURVE NO. 53 – RAMP F

		STATION	NORTHING	EASTING
Element: Circular				
PCC	(12125)	713+69.92	633651.8086	615145.3048
PI	(12126)	714+43.32	633578.4575	615142.7645
CC	(12127)		633529.0422	618690.1796
PT	(12128)	715+16.69	633505.0641	615143.2606
Radius:		3547.0000		
Delta:		2° 22′ 14.9094″ Left		
Degree of Curvature(Arc):		1° 36′ 55.1905″		
Length:		146.7692		
Tangent:		73.3951		
Chord:		146.7587		
Middle Ordinate:		0.7591		
External:		0.7593		
Tangent Direction:		S 1° 59′ 00.5258″ W		
Radial Direction:		N 88° 00′ 59.4742″ W		
Chord Direction:		S 0° 47′ 53.0710″ W		
Radial Direction:		S 89° 36′ 45.6163″ W		
Tangent Direction:		S 0° 23′ 14.3837″ E		

CIRCULAR CURVE NO. 54 – RAMP F

		STATION	NORTHING	EASTING
Element: Circular				
PC	(12129)	717+79.72	633242.0409	615145.0387
PI	(12130)	718+34.40	633187.3591	615145.4084
CC	(12131)		633205.1983	609695.1633
PCC	(12132)	718+89.08	633132.6809	615144.6808
Radius:		5450.0000		
Delta:		1° 08′ 59.0128″ Right		
Degree of Curvature(Arc):		1° 03′ 04.6753″		
Length:		109.3624		
Tangent:		54.6830		
Chord:		109.3606		
Middle Ordinate:		0.2743		
External:		0.2743		
Tangent Direction:		S 0° 23′ 14.3837″ E		
Radial Direction:		S 89° 36′ 45.6163″ W		
Chord Direction:		S 0° 11′ 15.1228″ W		
Radial Direction:		N 89° 14′ 15.3708″ W		
Tangent Direction:		S 0° 45′ 44.6292″ W		

CIRCULAR CURVE NO. 55 – RAMP F

		STATION	NORTHING	EASTING
Element: Circular				
PCC	(12132)	718+89.08	633132.6809	615144.6808
PI	(12133)	719+30.26	633091.5044	615144.1328
CC	(12134)		633203.4818	609824.1518
PCC	(12135)	719+71.44	633050.3414	615142.9477
Radius:		5321.0000		
Delta:		0° 53′ 12.5713″ Right		
Degree of Curvature(Arc):		1° 04′ 36.4294″		
Length:		82.3586		
Tangent:		41.1801		
Chord:		82.3577		
Middle Ordinate:		0.1593		
External:		0.1593		
Tangent Direction:		S 0° 45′ 44.6292″ W		
Radial Direction:		N 89° 14′ 15.3708″ W		
Chord Direction:		S 1° 12′ 20.9148″ W		
Radial Direction:		N 88° 21′ 02.7996″ W		
Tangent Direction:		S 1° 38′ 57.2004″ W		

NOTES:
1. SEE SHEET HV-14 FOR BASELINES.

UNOFFICIAL WEBSITE COPY

ADDENDA / REVISIONS

NOT TO SCALE

CANTILEVER AND OVERHEAD SIGN STRUCTURES, I-95

CONTRACT	BRIDGE NO.	N/A
T201907002	DESIGNED BY: RMB	
COUNTY		
NEW CASTLE	CHECKED BY: JWS	

HORIZONTAL AND VERTICAL CONTROL

HV-21
SECTION
TY
SHEET NO.
27

8/13/2019
T:\Dover\Projects\425025.14\600_CADD\05_Official\HV21.dgn

CIRCULAR CURVE NO. 56 – RAMP F

		STATION	NORTHING	EASTING
Element: Circular				
PCC	(12135)	719+71.44	633050.3414	615142.9477
PI	(12136)	720+14.29	633007.5100	615141.7145
CC	(12137)		633107.4469	613159.5866
PCC	(12138)	720+57.12	632964.7718	615138.6333
Radius:		1984.1830		
Delta:		2° 28′ 27.3352″ Right		
Degree of Curvature(Arc):		2° 53′ 15.4527″		
Length:		85.6849		
Tangent:		42.8491		
Chord:		85.6783		
Middle Ordinate:		0.4625		
External:		0.4626		
Tangent Direction:		S 1° 38′ 57.2004″ W		
Radial Direction:		N 88° 21′ 02.7996″ W		
Chord Direction:		S 2° 53′ 10.8680″ W		
Radial Direction:		N 85° 52′ 35.4644″ W		
Tangent Direction:		S 4° 07′ 24.5356″ W		

CIRCULAR CURVE NO. 57 – RAMP F

		STATION	NORTHING	EASTING
Element: Circular				
PCC	(12138)	720+57.12	632964.7718	615138.6333
PI	(12139)	722+62.74	632759.6877	615123.8482
CC	(12140)		633060.1518	613815.6172
PCC	(12141)	724+65.11	632568.7045	615047.6677
Radius:		1326.4498		
Delta:		17° 37′ 22.3248″ Right		
Degree of Curvature(Arc):		4° 19′ 10.1404″		
Length:		407.9855		
Tangent:		205.6163		
Chord:		406.3792		
Middle Ordinate:		15.6550		
External:		15.8420		
Tangent Direction:		S 4° 07′ 24.5356″ W		
Radial Direction:		N 85° 52′ 35.4644″ W		
Chord Direction:		S 12° 56′ 05.6980″ W		
Radial Direction:		N 68° 15′ 13.1396″ W		
Tangent Direction:		S 21° 44′ 46.8604″ W		

CIRCULAR CURVE NO. 58 – RAMP F

		STATION	NORTHING	EASTING
Element: Circular				
PCC	(12141)	724+65.11	632568.7045	615047.6677
PI	(12142)	726+30.41	632415.1704	614986.4252
CC	(12143)		633213.5567	613431.0336
PT	(12144)	727+94.72	632275.9097	614897.3755
Radius:		1740.5000		
Delta:		10° 51′ 01.3799″ Right		
Degree of Curvature(Arc):		3° 17′ 30.8938″		
Length:		329.6070		
Tangent:		165.2978		
Chord:		329.1147		
Middle Ordinate:		7.7966		
External:		7.8317		
Tangent Direction:		S 21° 44′ 46.8604″ W		
Radial Direction:		N 68° 15′ 13.1396″ W		
Chord Direction:		S 27° 10′ 17.5504″ W		
Radial Direction:		N 57° 24′ 11.7597″ W		
Tangent Direction:		S 32° 35′ 48.2403″ W		

UNOFFICIAL WEBSITE COPY

NOTES:
1. SEE SHEET HV-13 FOR BASELINES.

CIRCULAR CURVE NO. 47 – RAMP F

		STATION	NORTHING	EASTING
Element: Circular				
PCC	(12107)	706+51.50	634258.2613	615426.2082
PI	(12108)	706+80.83	634250.7775	615397.8521
CC	(12109)		633939.6702	615510.2915
PCC	(12110)	707+10.00	634238.4033	615371.2634
Radius:		329.5000		
Delta:		10° 10′ 20.6105″ Left		
Degree of Curvature(Arc):		17° 23′ 19.3342″		
Length:		58.5000		
Tangent:		29.3271		
Chord:		58.4232		
Middle Ordinate:		1.2974		
External:		1.3026		
Tangent Direction:		S 75° 12′ 55.7729″ W		
Radial Direction:		N 14° 47′ 04.2271″ W		
Chord Direction:		S 70° 07′ 45.4677″ W		
Radial Direction:		N 24° 57′ 24.8376″ W		
Tangent Direction:		S 65° 02′ 35.1624″ W		

CIRCULAR CURVE NO. 63 – RAMP E

		STATION	NORTHING	EASTING
Element: Circular				
PCC	(12057)	505+38.39	634396.4252	615644.6310
PI	(12058)	505+67.13	634419.4374	615627.4046
CC	(12059)		634627.1436	615952.8419
PCC	(12060)	505+95.77	634444.7527	615613.7866
Radius:		385.0000		
Delta:		8° 32′ 24.0768″ Right		
Degree of Curvature(Arc):		14° 52′ 55.2743″		
Length:		57.3848		
Tangent:		28.7457		
Chord:		57.3317		
Middle Ordinate:		1.0687		
External:		1.0716		
Tangent Direction:		N 36° 49′ 03.1673″ W		
Radial Direction:		N 53° 10′ 56.8327″ E		
Chord Direction:		N 32° 32′ 51.1289″ W		
Radial Direction:		N 61° 43′ 20.9095″ E		
Tangent Direction:		N 28° 16′ 39.0905″ W		

CIRCULAR CURVE NO. 45 – RAMP F

		STATION	NORTHING	EASTING
Element: Circular				
PC	(12101)	702+75.00	634214.8680	615791.3584
PI	(12102)	703+12.06	634232.3065	615758.6547
CC	(12103)		633756.0243	615546.6903
PCC	(12104)	703+49.00	634244.9305	615723.8083
Radius:		520.0000		
Delta:		8° 09′ 13.0686″ Left		
Degree of Curvature(Arc):		11° 01′ 06.3089″		
Length:		74.0000		
Tangent:		37.0626		
Chord:		73.9376		
Middle Ordinate:		1.3158		
External:		1.3191		
Tangent Direction:		N 61° 55′ 56.0356″ W		
Radial Direction:		N 28° 04′ 03.9644″ E		
Chord Direction:		N 66° 00′ 32.5699″ W		
Radial Direction:		N 19° 54′ 50.8958″ E		
Tangent Direction:		N 70° 05′ 09.1042″ W		

CIRCULAR CURVE NO. 61 – RAMP E

		STATION	NORTHING	EASTING
Element: Circular				
PC	(12051)	501+01.39	634131.3085	615987.8153
PI	(12052)	502+32.95	634193.3287	615871.7971
CC	(12053)		635582.9136	616763.8042
PCC	(12054)	503+63.94	634272.9892	615767.1025
Radius:		1646.0000		
Delta:		9° 08′ 21.1347″ Right		
Degree of Curvature(Arc):		3° 28′ 51.2762″		
Length:		262.5521		
Tangent:		131.5551		
Chord:		262.2739		
Middle Ordinate:		5.2322		
External:		5.2488		
Tangent Direction:		N 61° 52′ 20.0816″ W		
Radial Direction:		N 28° 07′ 39.9184″ E		
Chord Direction:		N 57° 18′ 09.5142″ W		
Radial Direction:		N 37° 16′ 01.0532″ E		
Tangent Direction:		N 52° 43′ 58.9468″ W		

CIRCULAR CURVE NO. 64 – RAMP E

		STATION	NORTHING	EASTING
Element: Circular				
PCC	(12060)	505+95.77	634444.7527	615613.7866
PI	(12061)	506+50.81	634493.2201	615587.7141
CC	(12062)		634585.9280	615876.2242
PCC	(12063)	507+04.62	634547.8031	615580.6731
Radius:		298.0000		
Delta:		20° 55′ 37.8548″ Right		
Degree of Curvature(Arc):		19° 13′ 36.3779″		
Length:		108.8440		
Tangent:		55.0352		
Chord:		108.2400		
Middle Ordinate:		4.9556		
External:		5.0394		
Tangent Direction:		N 28° 16′ 39.0905″ W		
Radial Direction:		N 61° 43′ 20.9095″ E		
Chord Direction:		N 17° 48′ 50.1631″ W		
Radial Direction:		N 82° 38′ 58.7642″ E		
Tangent Direction:		N 7° 21′ 01.2358″ W		

CIRCULAR CURVE NO. 46 – RAMP F

		STATION	NORTHING	EASTING
Element: Circular				
PCC	(12104)	703+49.00	634244.9305	615723.8083
PI	(12105)	705+05.05	634298.0825	615577.0906
CC	(12106)		633775.2985	615553.6728
PCC	(12107)	706+51.50	634258.2613	615426.2082
Radius:		499.5000		
Delta:		34° 41′ 55.1229″ Left		
Degree of Curvature(Arc):		11° 28′ 14.2555″		
Length:		302.5000		
Tangent:		156.0488		
Chord:		297.8985		
Middle Ordinate:		22.7250		
External:		23.8082		
Tangent Direction:		N 70° 05′ 09.1042″ W		
Radial Direction:		N 19° 54′ 50.8958″ E		
Chord Direction:		N 87° 26′ 06.6656″ W		
Radial Direction:		N 14° 47′ 04.2271″ W		
Tangent Direction:		S 75° 12′ 55.7729″ W		

CIRCULAR CURVE NO. 62 – RAMP E

		STATION	NORTHING	EASTING
Element: Circular				
PCC	(12054)	503+63.94	634272.9892	615767.1025
PI	(12055)	504+51.73	634326.1471	615697.2393
CC	(12056)		634772.7660	616147.3751
PCC	(12057)	505+38.39	634396.4252	615644.6310
Radius:		628.0000		
Delta:		15° 54′ 55.7795″ Right		
Degree of Curvature(Arc):		9° 07′ 24.7144″		
Length:		174.4444		
Tangent:		87.7874		
Chord:		173.8841		
Middle Ordinate:		6.0474		
External:		6.1062		
Tangent Direction:		N 52° 43′ 58.9468″ W		
Radial Direction:		N 37° 16′ 01.0532″ E		
Chord Direction:		N 44° 46′ 31.0571″ W		
Radial Direction:		N 53° 10′ 56.8327″ E		
Tangent Direction:		N 36° 49′ 03.1673″ W		

CIRCULAR CURVE NO. 65 – RAMP E

		STATION	NORTHING	EASTING
Element: Circular				
PCC	(12063)	507+04.62	634547.8031	615580.6731
PI	(12064)	507+45.81	634588.6562	615575.4032
CC	(12065)		634590.1499	615908.9530
PCC	(12066)	507+86.58	634629.5549	615580.3070
Radius:		331.0000		
Delta:		14° 11′ 15.0949″ Right		
Degree of Curvature(Arc):		17° 18′ 35.6514″		
Length:		81.9619		
Tangent:		41.1916		
Chord:		81.7527		
Middle Ordinate:		2.5337		
External:		2.5532		
Tangent Direction:		N 7° 21′ 01.2358″ W		
Radial Direction:		N 82° 38′ 58.7642″ E		
Chord Direction:		N 0° 15′ 23.6883″ W		
Radial Direction:		S 83° 09′ 46.1409″ E		
Tangent Direction:		N 6° 50′ 13.8591″ E		

NOTES:
1. SEE SHEET HV-14 FOR BASELINES.

UNOFFICIAL WEBSITE COPY

ADDENDA / REVISIONS	NOT TO SCALE	CANTILEVER AND OVERHEAD SIGN STRUCTURES, I-95	CONTRACT T201907002	BRIDGE NO. N/A	HORIZONTAL AND VERTICAL CONTROL	HV-23
			COUNTY NEW CASTLE	DESIGNED BY: RMB		SECTION TY
				CHECKED BY: JWS		SHEET NO. 29

8/13/2019
T:\Dover\Projects\425025;14\600_CADD\05_Official\HV23.dgn

CIRCULAR CURVE NO. 66 – RAMP E

	STATION	NORTHING	EASTING
Element: Circular			
PCC (12066)	507+86.58	634629.5549	615580.3070
PI (12067)	509+23.60	634765.6056	615596.6196
CC (12068)		634541.3975	616315.5588
PT (12069)	510+57.56	634886.8110	615660.5348
Radius:	740.5181		
Delta:	20° 58′ 00.5742″ Right		
Degree of Curvature(Arc):	7° 44′ 14.1217″		
Length:	270.9853		
Tangent:	137.0252		
Chord:	269.4758		
Middle Ordinate:	12.3610		
External:	12.5708		
Tangent Direction:	N 6° 50′ 13.8591″ E		
Radial Direction:	S 83° 09′ 46.1409″ E		
Chord Direction:	N 17° 19′ 14.1462″ E		
Radial Direction:	S 62° 11′ 45.5666″ E		
Tangent Direction:	N 27° 48′ 14.4334″ E		

CIRCULAR CURVE NO. 67 – RAMP J

	STATION	NORTHING	EASTING
Element: Circular			
PC (12201)	902+02.82	636011.1361	616156.7124
PI (12202)	902+67.07	635954.3010	616126.7415
CC (12203)		636333.7679	615544.8905
PT (12204)	903+30.96	635903.9590	616086.8144
Radius:	691.6771		
Delta:	10° 36′ 52.2580″ Right		
Degree of Curvature(Arc):	8° 17′ 00.9667″		
Length:	128.1389		
Tangent:	64.2533		
Chord:	127.9557		
Middle Ordinate:	2.9652		
External:	2.9780		
Tangent Direction:	S 27° 48′ 14.4301″ W		
Radial Direction:	N 62° 11′ 45.5699″ W		
Chord Direction:	S 33° 06′ 40.5591″ W		
Radial Direction:	N 51° 34′ 53.3119″ W		
Tangent Direction:	S 38° 25′ 06.6881″ W		

CIRCULAR CURVE NO. 68 – RAMP J

	STATION	NORTHING	EASTING
Element: Circular			
PC (12205)	906+68.61	635639.4154	615877.0005
PI (12206)	907+56.25	635570.7438	615822.5359
CC (12207)		634875.5580	616840.1087
PT (12208)	908+43.61	635495.0393	615778.3656
Radius:	1229.2500		
Delta:	8° 09′ 24.5066″ Left		
Degree of Curvature(Arc):	4° 39′ 39.7280″		
Length:	174.9999		
Tangent:	87.6480		
Chord:	174.8522		
Middle Ordinate:	3.1129		
External:	3.1208		
Tangent Direction:	S 38° 25′ 06.6881″ W		
Radial Direction:	N 51° 34′ 53.3119″ W		
Chord Direction:	S 34° 20′ 24.4348″ W		
Radial Direction:	N 59° 44′ 17.8184″ W		
Tangent Direction:	S 30° 15′ 42.1816″ W		

CIRCULAR CURVE NO. 69 – RAMP K

	STATION	NORTHING	EASTING
Element: Circular			
PC (12231)	1002+21.19	635892.1574	616187.8045
PI (12232)	1002+59.31	635925.8781	616205.5865
CC (12233)		635425.7089	617072.3529
PT (12234)	1002+97.40	635958.1471	616225.8840
Radius:	1000.0000		
Delta:	4° 21′ 58.8067″ Right		
Degree of Curvature(Arc):	5° 43′ 46.4806″		
Length:	76.2069		
Tangent:	38.1219		
Chord:	76.1885		
Middle Ordinate:	0.7258		
External:	0.7264		
Tangent Direction:	N 27° 48′ 14.4301″ E		
Radial Direction:	S 62° 11′ 45.5699″ E		
Chord Direction:	N 29° 59′ 13.8334″ E		
Radial Direction:	S 57° 49′ 46.7632″ E		
Tangent Direction:	N 32° 10′ 13.2368″ E		

CIRCULAR CURVE NO. 70 – RAMP K

	STATION	NORTHING	EASTING
Element: Circular			
PC (12235)	1009+69.07	636526.6961	616583.5076
PI (12236)	1010+74.71	636616.1176	616639.7547
CC (12237)		635734.3041	617843.2504
PT (12238)	1011+80.00	636696.6972	616708.0691
Radius:	1488.2328		
Delta:	8° 07′ 13.9318″ Right		
Degree of Curvature(Arc):	3° 50′ 59.7137″		
Length:	210.9274		
Tangent:	105.6406		
Chord:	210.7509		
Middle Ordinate:	3.7353		
External:	3.7447		
Tangent Direction:	N 32° 10′ 13.2367″ E		
Radial Direction:	S 57° 49′ 46.7633″ E		
Chord Direction:	N 36° 13′ 50.2027″ E		
Radial Direction:	S 49° 42′ 32.8314″ E		
Tangent Direction:	N 40° 17′ 27.1685″ E		

NOTES:
1. SEE SHEET HV-14 FOR BASELINES.

UNOFFICIAL WEBSITE COPY

ADDENDA / REVISIONS

NOT TO SCALE

CANTILEVER AND OVERHEAD SIGN STRUCTURES, I-95

CONTRACT	BRIDGE NO.	N/A
T201907002	DESIGNED BY: RMB	
COUNTY		
NEW CASTLE	CHECKED BY: JWS	

HORIZONTAL AND VERTICAL CONTROL

HV-24
SECTION TY
SHEET NO. 30

8/13/2019
T:\Dover\Projects\425025;14\600_CADD\05_Official\HV24.dgn

CIRCULAR CURVE NO. 71 – RAMP L

		STATION	NORTHING	EASTING
Element: Circular				
PC	(12261)	1100+83.76	637792.2573	616976.0563
PI	(12262)	1101+59.19	637726.4465	616939.1958
CC	(12263)		637303.5881	617848.5255
PT	(12264)	1102+34.33	637655.8510	616912.6244
Radius:		1000.0000		
Delta:		8° 37′ 38.5100″ Left		
Degree of Curvature(Arc):		5° 43′ 46.4806″		
Length:		150.5759		
Tangent:		75.4305		
Chord:		150.4337		
Middle Ordinate:		2.8328		
External:		2.8408		
Tangent Direction:		S 29° 15′ 11.3506″ W		
Radial Direction:		N 60° 44′ 48.6494″ W		
Chord Direction:		S 24° 56′ 22.0956″ W		
Radial Direction:		N 69° 22′ 27.1594″ W		
Tangent Direction:		S 20° 37′ 32.8406″ W		

CIRCULAR CURVE NO. 72 – RAMP L

		STATION	NORTHING	EASTING
Element: Circular				
PC	(12265)	1109+66.43	636970.6793	616654.7332
PI	(12266)	1110+22.88	636917.8463	616634.8475
CC	(12267)		637287.7159	615812.4223
PT	(12668)	1110+79.18	636867.9123	616608.5158
Radius:		900.0000		
Delta:		7° 10′ 41.5895″ Right		
Degree of Curvature(Arc):		6° 21′ 58.3118″		
Length:		112.7552		
Tangent:		56.4515		
Chord:		112.6815		
Middle Ordinate:		1.7652		
External:		1.7687		
Tangent Direction:		S 20° 37′ 32.8406″ W		
Radial Direction:		N 69° 22′ 27.1594″ W		
Chord Direction:		S 24° 12′ 53.6353″ W		
Radial Direction:		N 62° 11′ 45.5699″ W		
Tangent Direction:		S 27° 48′ 14.4301″ W		

CIRCULAR CURVE NO. 73 – RAMP M

		STATION	NORTHING	EASTING
Element: Circular				
PC	(12291)	1201+53.05	637178.3139	616953.3987
PI	(12292)	1203+07.23	637329.2145	616985.0254
CC	(12293)		636994.5180	617830.3452
PT	(12294)	1204+58.42	637460.8646	617065.2720
Radius:		896.0000		
Delta:		19° 31′ 37.6316″ Right		
Degree of Curvature(Arc):		6° 23′ 40.6257″		
Length:		305.3680		
Tangent:		154.1793		
Chord:		303.8923		
Middle Ordinate:		12.9777		
External:		13.1684		
Tangent Direction:		N 11° 50′ 13.4570″ E		
Radial Direction:		S 78° 09′ 46.5430″ E		
Chord Direction:		N 21° 36′ 02.2728″ E		
Radial Direction:		S 58° 38′ 08.9114″ E		
Tangent Direction:		N 31° 21′ 51.0886″ E		

CIRCULAR CURVE NO. 74 – RAMP M

		STATION	NORTHING	EASTING
Element: Circular				
PC	(12295)	1206+29.59	637607.0292	617154.3660
PI	(12296)	1206+96.40	637664.0761	617189.1386
CC	(12297)		637221.8769	617786.2344
PT	(12298)	1207+62.85	637713.9725	617233.5664
Radius:		740.0000		
Delta:		10° 19′ 03.6296″ Right		
Degree of Curvature(Arc):		7° 44′ 33.6225″		
Length:		133.2573		
Tangent:		66.8093		
Chord:		133.0773		
Middle Ordinate:		2.9976		
External:		3.0097		
Tangent Direction:		N 31° 21′ 51.0886″ E		
Radial Direction:		S 58° 38′ 08.9114″ E		
Chord Direction:		N 36° 31′ 22.9034″ E		
Radial Direction:		S 48° 19′ 05.2818″ E		
Tangent Direction:		N 41° 40′ 54.7182″ E		

CIRCULAR CURVE NO. 75 – RAMP N

		STATION	NORTHING	EASTING
Element: Circular				
PC	(12320)	1300+00.00	638177.1759	617509.5763
PI	(12321)	1301+36.70	638062.1541	617435.7120
CC	(12322)		638663.4928	616752.2812
PT	(12323)	1302+71.32	637974.2513	617331.0265
Radius:		900.0000		
Delta:		17° 16′ 21.8491″ Right		
Degree of Curvature(Arc):		6° 21′ 58.3118″		
Length:		271.3195		
Tangent:		136.6966		
Chord:		270.2932		
Middle Ordinate:		10.2049		
External:		10.3219		
Tangent Direction:		S 32° 42′ 27.3949″ W		
Radial Direction:		N 57° 17′ 32.6051″ W		
Chord Direction:		S 41° 20′ 38.3195″ W		
Radial Direction:		N 40° 01′ 10.7560″ W		
Tangent Direction:		S 49° 58′ 49.2440″ W		

CIRCULAR CURVE NO. 76 – RAMP N

		STATION	NORTHING	EASTING
Element: Circular				
PC	(12324)	1306+44.69	637734.1554	617045.0906
PI	(12325)	1309+49.28	637538.2915	616811.8317
CC	(12326)		637573.7153	617179.8097
PT	(12327)	1310+50.40	637390.5219	617078.1708
Radius:		209.5000		
Delta:		110° 57′ 29.0557″ Left		
Degree of Curvature(Arc):		27° 20′ 55.7548″		
Length:		405.7143		
Tangent:		304.5856		
Chord:		345.2220		
Middle Ordinate:		90.7747		
External:		160.1791		
Tangent Direction:		S 49° 58′ 49.2440″ W		
Radial Direction:		N 40° 01′ 10.7560″ W		
Chord Direction:		S 5° 29′ 55.2839″ E		
Radial Direction:		S 29° 01′ 20.1883″ W		
Tangent Direction:		S 60° 58′ 39.8117″ E		

NOTES:
1. SEE SHEET HV-15 FOR BASELINES.

UNOFFICIAL WEBSITE COPY

ADDENDA / REVISIONS

NOT TO SCALE

CANTILEVER AND OVERHEAD SIGN STRUCTURES, I-95

CONTRACT	BRIDGE NO.	N/A
T201907002	DESIGNED BY: RMB	
COUNTY		
NEW CASTLE	CHECKED BY: JWS	

HORIZONTAL AND VERTICAL CONTROL

HV-25
SECTION
TY
SHEET NO.
31

CIRCULAR CURVE NO. 77 – RAMP O

		STATION	NORTHING	EASTING
Element: Circular				
PC	(12360)	1400+00.00	637910.5709	617477.0101
PI	(12361)	1401+19.81	637985.3808	617570.5952
CC	(12362)		638379.2343	617102.3708
PCC	(12363)	1402+36.51	638090.3954	617628.2720
Radius:		600.0000		
Delta:		22° 35′ 06.5976″ Left		
Degree of Curvature(Arc):		9° 32′ 57.4677″		
Length:		236.5113		
Tangent:		119.8111		
Chord:		234.9830		
Middle Ordinate:		11.6160		
External:		11.8453		
Tangent Direction:		N 51° 21′ 42.8990″ E		
Radial Direction:		S 38° 38′ 17.1010″ E		
Chord Direction:		N 40° 04′ 09.6003″ E		
Radial Direction:		S 61° 13′ 23.6985″ E		
Tangent Direction:		N 28° 46′ 36.3015″ E		

CIRCULAR CURVE NO. 78 – RAMP O

		STATION	NORTHING	EASTING
Element: Circular				
PCC	(12363)	1402+36.51	638090.3954	617628.2720
PI	(12364)	1404+97.76	638319.3803	617754.0366
CC	(12365)		638776.3877	616379.2565
PT	(12366)	1407+53.27	638578.0870	617790.3915
Radius:		1425.0000		
Delta:		20° 46′ 39.3658″ Left		
Degree of Curvature(Arc):		4° 01′ 14.7232″		
Length:		516.7585		
Tangent:		261.2485		
Chord:		513.9316		
Middle Ordinate:		23.3604		
External:		23.7497		
Tangent Direction:		N 28° 46′ 36.3015″ E		
Radial Direction:		S 61° 13′ 23.6985″ E		
Chord Direction:		N 18° 23′ 16.6186″ E		
Radial Direction:		S 82° 00′ 03.0643″ E		
Tangent Direction:		N 7° 59′ 56.9357″ E		

CIRCULAR CURVE NO. 79 – RAMP O

		STATION	NORTHING	EASTING
Element: Circular				
PC	(12367)	1408+95.85	638719.2795	617810.2327
PI	(12368)	1409+28.68	638751.3933	617817.0580
CC	(12369)		639501.0179	614132.0780
PT	(12370)	1409+61.51	638783.6214	617823.3215
Radius:		3760.3107		
Delta:		1° 00′ 01.6892″ Left		
Degree of Curvature(Arc):		1° 31′ 25.3129″		
Length:		65.6606		
Tangent:		32.8311		
Chord:		65.6598		
Middle Ordinate:		0.1433		
External:		0.1433		
Tangent Direction:		N 11° 59′ 55.8434″ E		
Radial Direction:		S 78° 00′ 04.1566″ E		
Chord Direction:		N 11° 29′ 54.9988″ E		
Radial Direction:		S 79° 00′ 05.8458″ E		
Tangent Direction:		N 10° 59′ 54.1542″ E		

CIRCULAR CURVE NO. 80 – RAMP P

		STATION	NORTHING	EASTING
Element: Circular				
PC	(12390)	1500+00.00	638841.8536	617747.4293
PI	(12391)	1500+10.01	638832.0046	617745.6336
CC	(12392)		639501.0179	614132.0780
PCC	(12393)	1500+20.02	638822.1656	617743.7843
Radius:		3674.9507		
Delta:		0° 18′ 43.8108″ Right		
Degree of Curvature(Arc):		1° 33′ 32.7231″		
Length:		20.0226		
Tangent:		10.0113		
Chord:		20.0225		
Middle Ordinate:		0.0136		
External:		0.0136		
Tangent Direction:		S 10° 19′ 58.3796″ W		
Radial Direction:		N 79° 40′ 01.6204″ W		
Chord Direction:		S 10° 29′ 20.2849″ W		
Radial Direction:		N 79° 21′ 17.8097″ W		
Tangent Direction:		S 10° 38′ 42.1903″ W		

CIRCULAR CURVE NO. 81 – RAMP P

		STATION	NORTHING	EASTING
Element: Circular				
PCC	(12393)	1500+20.02	638822.1656	617743.7843
PI	(12394)	1502+86.79	638559.9901	617694.5061
CC	(12395)		638960.7088	617006.6915
PT	(12396)	1505+32.62	638387.8208	617490.7364
Radius:		750.0000		
Delta:		39° 09′ 35.2366″ Right		
Degree of Curvature(Arc):		7° 38′ 21.9742″		
Length:		512.6004		
Tangent:		266.7665		
Chord:		502.6814		
Middle Ordinate:		43.3687		
External:		46.0304		
Tangent Direction:		S 10° 38′ 42.1903″ W		
Radial Direction:		N 79° 21′ 17.8097″ W		
Chord Direction:		S 30° 13′ 29.8086″ W		
Radial Direction:		N 40° 11′ 42.5731″ W		
Tangent Direction:		S 49° 48′ 17.4269″ W		

NOTES:
1. SEE SHEET HV-15 FOR BASELINES.

UNOFFICIAL WEBSITE COPY

ADDENDA / REVISIONS

NOT TO SCALE

CANTILEVER AND OVERHEAD SIGN STRUCTURES, I-95

CONTRACT	BRIDGE NO.	N/A
T201907002	DESIGNED BY: RMB	
COUNTY		
NEW CASTLE	CHECKED BY: JWS	

HORIZONTAL AND VERTICAL CONTROL

HV-26
SECTION
TY
SHEET NO.
32

8/13/2019
T:\Dover\Projects\425025,14\600_CADD\05_Official\HV26.dgn

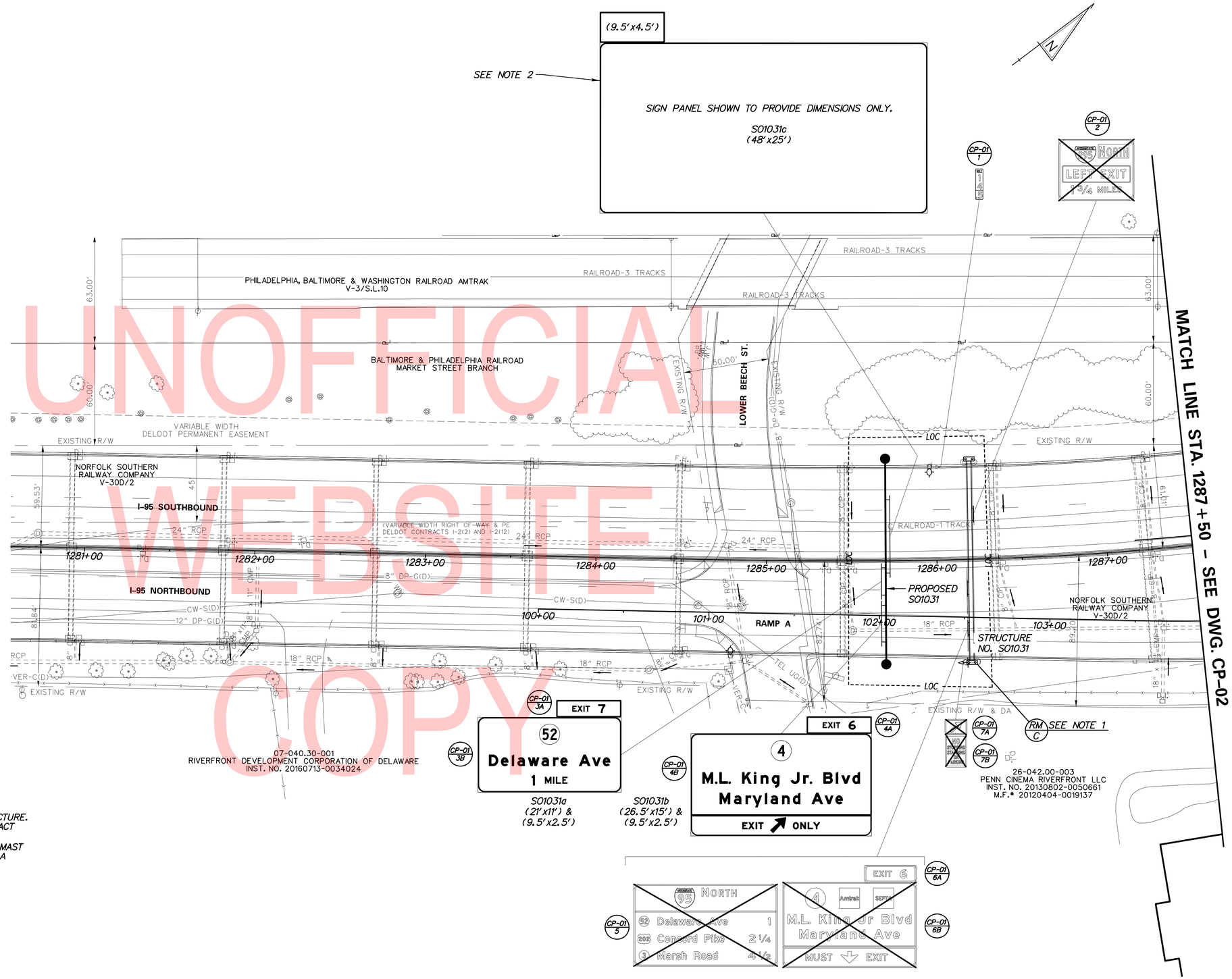

UNOFFICIAL WEBSITE COPY

NOTES:

1. REMOVE EXISTING SIGN PANEL, SIGN SUPPORTS, AND OVERHEAD SIGN STRUCTURE. SIGN STRUCTURE SUPPORT BRACKET TO BE REMOVED ON A FUTURE CONTRACT BY OTHERS.
2. INSTALL FOUNDATION, OVERHEAD SIGN STRUCTURE, AND SUPPORT BEAM TO MAST ARM CONNECTION ONLY. SIGN PANEL TO BE FURNISHED AND INSTALLED ON A FUTURE CONTRACT BY OTHERS.

ADDENDA / REVISIONS		SCALE 0 30 60 90 FEET	CANTILEVER AND OVERHEAD SIGN STRUCTURES, I-95	CONTRACT T201907002	BRIDGE NO. N/A	CONSTRUCTION PLAN	CP-01
				COUNTY NEW CASTLE	DESIGNED BY: AMP		SECTION TY
					CHECKED BY: RMB		SHEET NO. 33

8/13/2019
T:\Dover\Projects\425025.14\600_CADD\05_Official\CP01.dgn

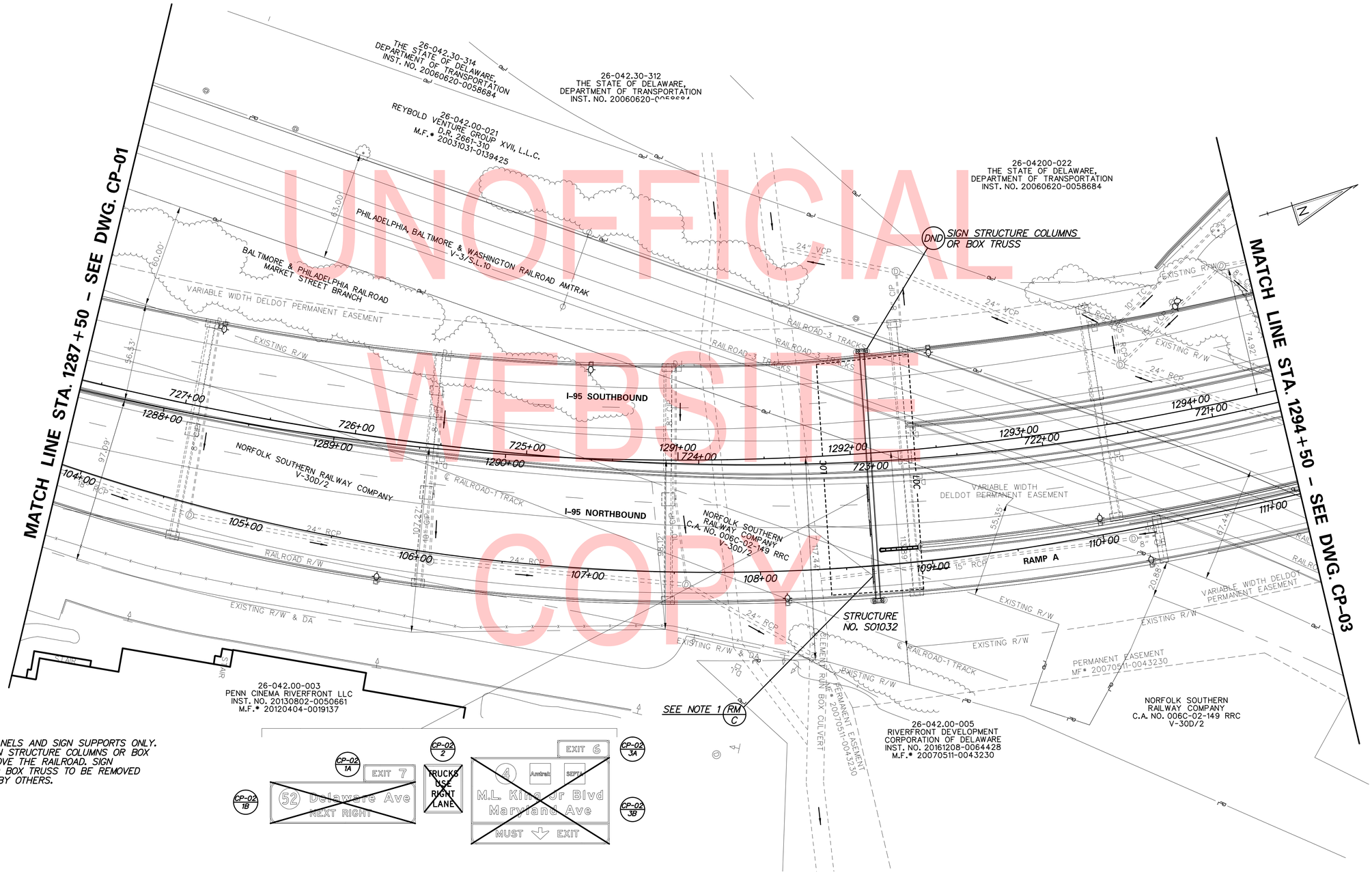

UNOFFICIAL WEBSITE COPY

NOTES:

1. REMOVE EXISTING SIGN PANELS AND SIGN SUPPORTS ONLY. DO NOT DISTURB THE SIGN STRUCTURE COLUMNS OR BOX TRUSS. DO NOT WORK ABOVE THE RAILROAD. SIGN STRUCTURE COLUMNS AND BOX TRUSS TO BE REMOVED ON A FUTURE CONTRACT BY OTHERS.

ADDENDA / REVISIONS

SCALE 0 30 60 90 FEET

CANTILEVER AND OVERHEAD SIGN STRUCTURES, I-95

CONTRACT	BRIDGE NO.	N/A
T201907002	DESIGNED BY: AMP	
COUNTY		
NEW CASTLE	CHECKED BY: RMB	

CONSTRUCTION PLAN

CP-02
SECTION
TY
SHEET NO.
34

8/13/2019
T:\Dover\Projects\425025.14\600_CADD\05_Official\CP02.dgn

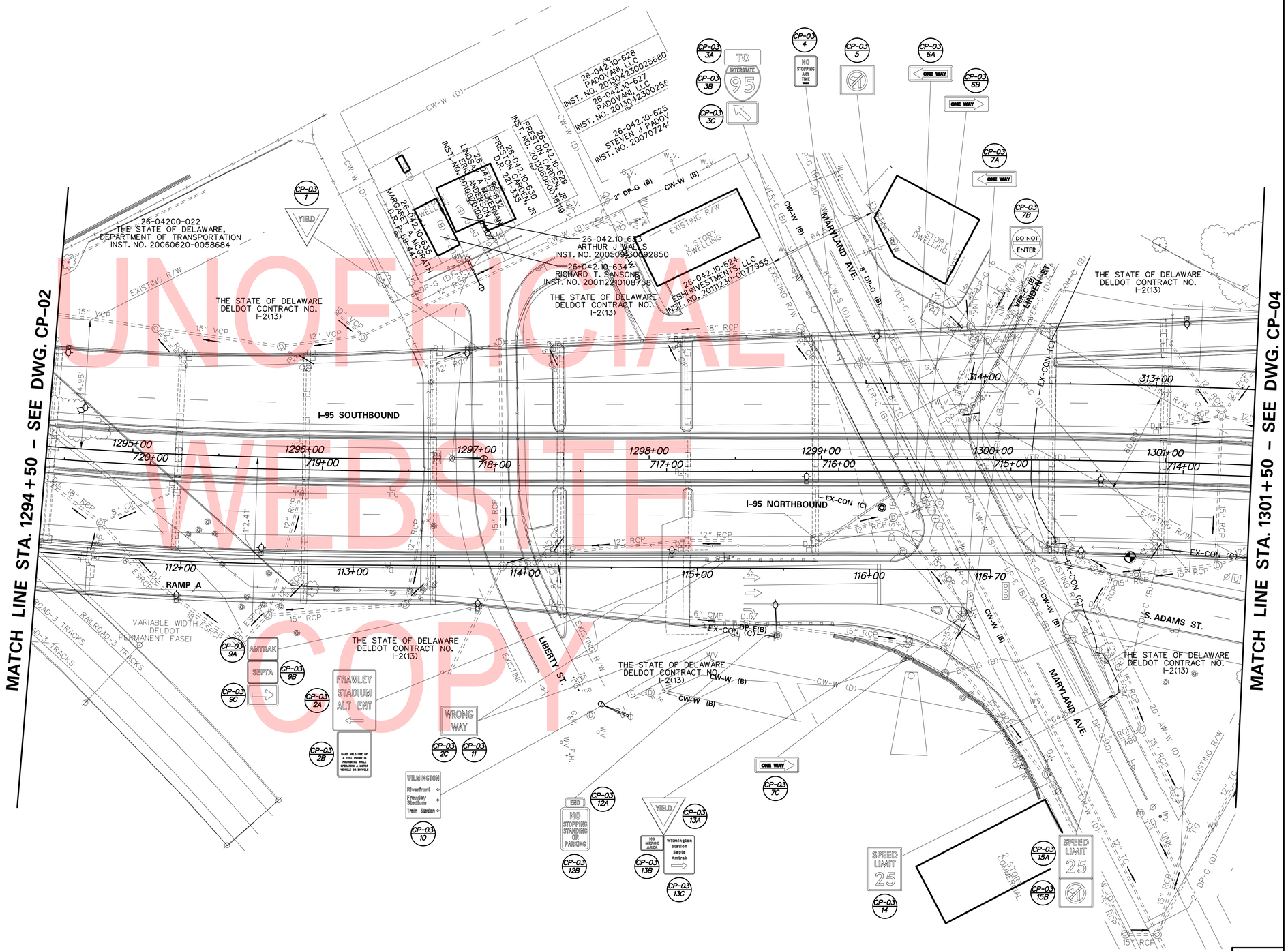

UNOFFICIAL WEBSITE COPY

ADDENDA / REVISIONS	

SCALE
0 30 60 90
FEET

CANTILEVER AND OVERHEAD SIGN STRUCTURES, I-95

CONTRACT	BRIDGE NO.	N/A
T201907002	DESIGNED BY: AMP	
COUNTY		
NEW CASTLE	CHECKED BY: RMB	

CONSTRUCTION PLAN

CP-03
SECTION
TY
SHEET NO.
35

8/13/2019
T:\Dover\Projects\425025.14\600_CADD\05_Official\CP03.dgn

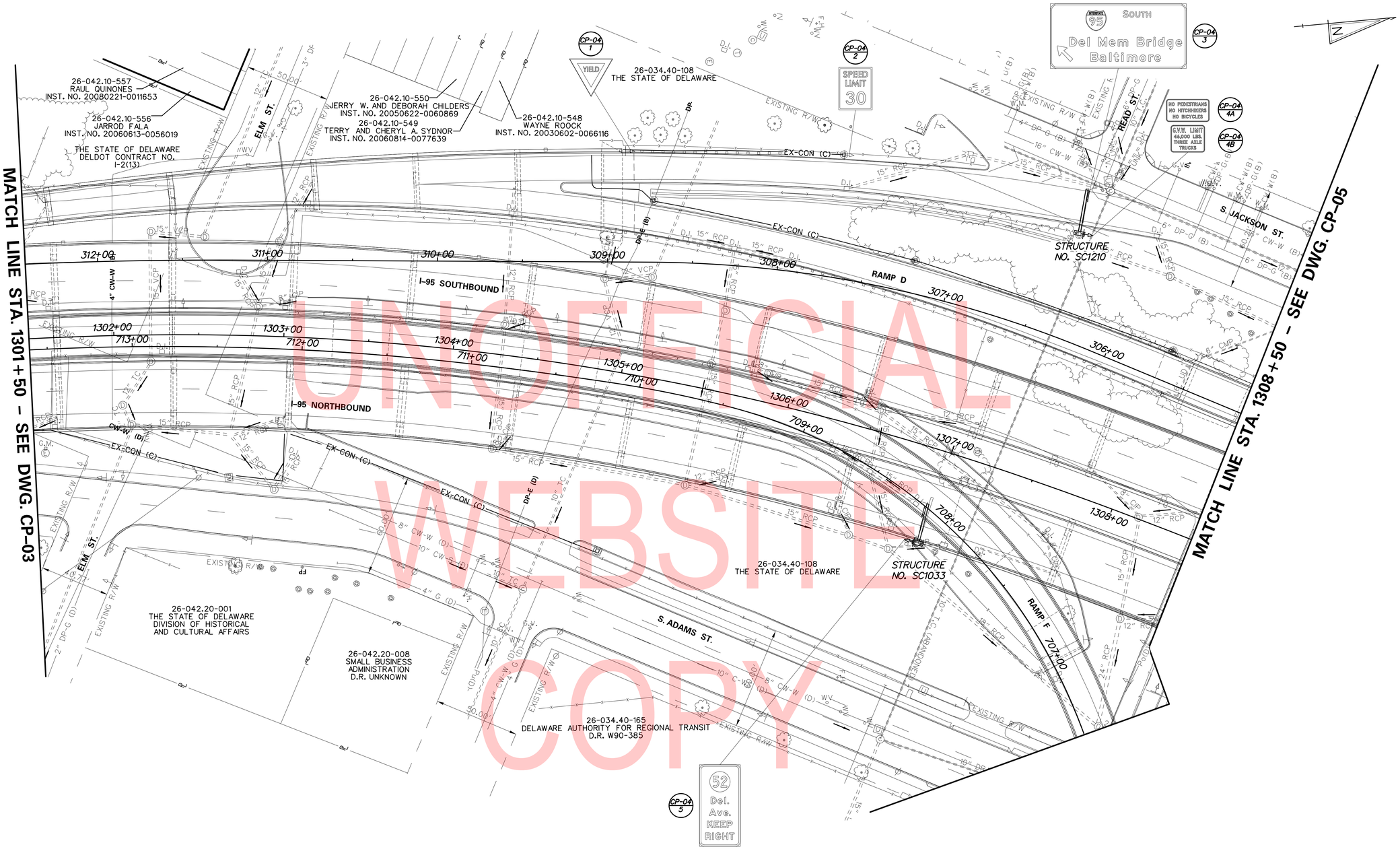

UNOFFICIAL WEBSITE COPY

ADDENDA / REVISIONS	

SCALE
0 30 60 90
FEET

CANTILEVER AND OVERHEAD SIGN STRUCTURES, I-95

CONTRACT	BRIDGE NO.	N/A
T201907002	DESIGNED BY: AMP	
COUNTY		
NEW CASTLE	CHECKED BY: RMB	

CONSTRUCTION PLAN

CP-04
SECTION
TY
SHEET NO.
36

8/13/2019
T:\Dover\Projects\425025.14\600_CADD\05_Official\CP04.dgn

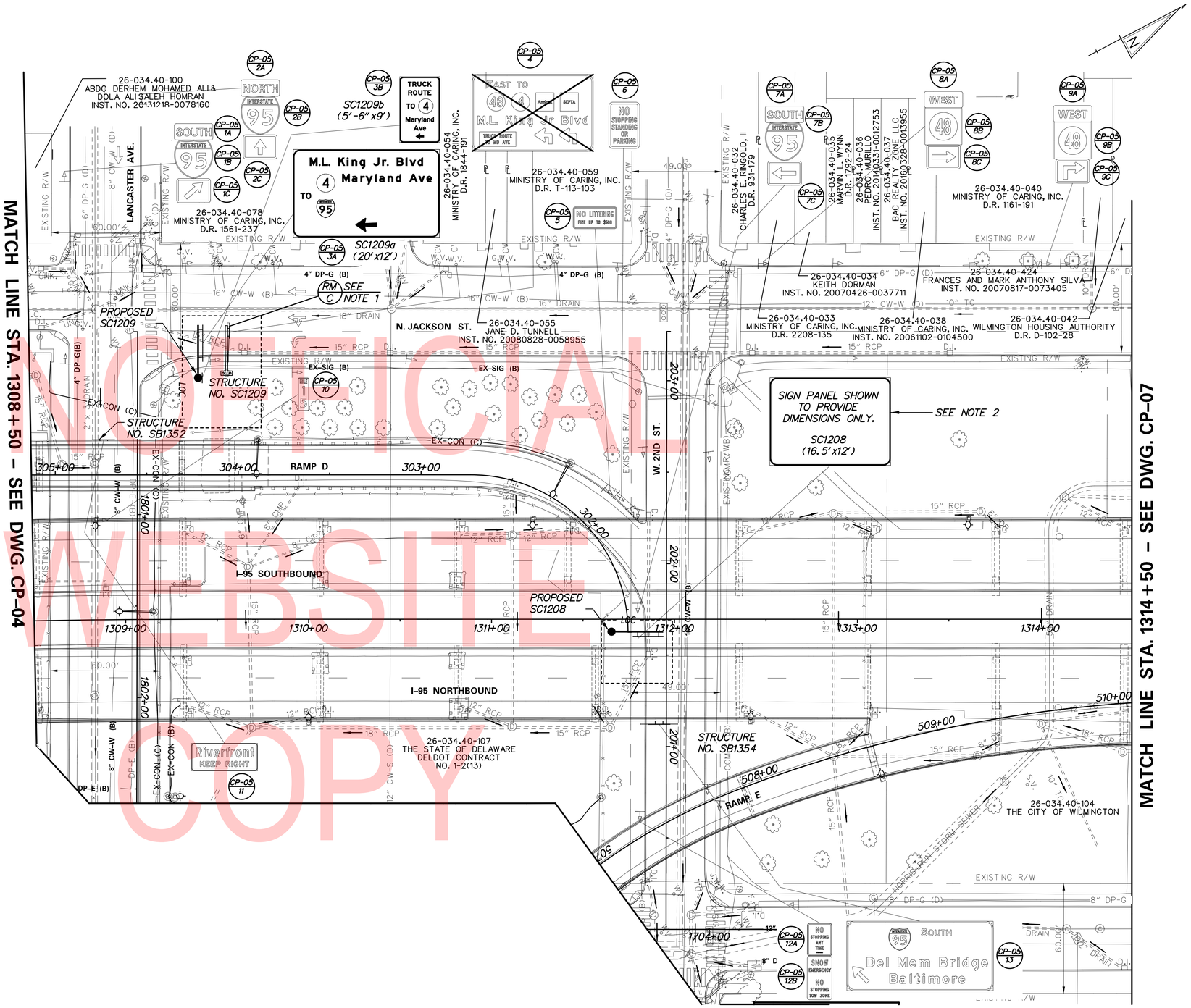

UNOFFICIAL WEBSITE COPY

NOTES:

1. REMOVE EXISTING SIGN PANEL, SIGN SUPPORTS, CANTILEVER SIGN STRUCTURE AND FOUNDATION.
2. INSTALL FOUNDATION, CANTILEVER SIGN STRUCTURE, AND SUPPORT BEAM TO MAST ARM CONNECTION ONLY. SIGN PANEL TO BE FURNISHED AND INSTALLED ON A FUTURE CONTRACT BY OTHERS. CONTRACTOR SHALL COORDINATE CONSTRUCTION OF SC1208 WITH THE CONTRACTOR ON DELDOT CONTRACT T20197402 AT LEAST TWO WEEKS PRIOR TO BEGINNING WORK.

ADDENDA / REVISIONS	

SCALE: 0 30 60 90 FEET

CANTILEVER AND OVERHEAD SIGN STRUCTURES, I-95

CONTRACT	BRIDGE NO.	N/A
T201907002	DESIGNED BY: AMP	
COUNTY: NEW CASTLE	CHECKED BY: RMB	

CONSTRUCTION PLAN

CP-05
SECTION: TY
SHEET NO. 37

8/13/2019
T:\Dover\Projects\425025.14\600_CADD\05_Official\CP05.dgn

NOTES:
1. REMOVE EXISTING SIGN PANELS, SIGN SUPPORTS, OVERHEAD SIGN STRUCTURE AND FOUNDATIONS.
2. SEE DWG. XS-12 FOR GUARDRAIL MAINTENANCE STRIP DETAILS.

GUARDRAIL SCHEDULE

NO.	ITEM DESCRIPTION / TYPE	BEGIN STA.	OFFSET	LENGTH
1	END ANCHORAGE, TYPE 31	810+03.08	20.5'	12.50'
2	GALVANIZED STEEL BEAM GUARDRAIL, TYPE 1-31	809+90.58	20.5'	100.00'
3	TYPE 1 END TREATMENT	808+90.58	20.5'	50.00'
4	END ANCHORAGE, TYPE 31	810+13.68	26.5'	12.50'
5	GALVANIZED STEEL BEAM GUARDRAIL, TYPE 1-31	810+01.18	26.5'	75.00'
6	TYPE 1 END TREATMENT	809+26.18	26.5'	50.00'

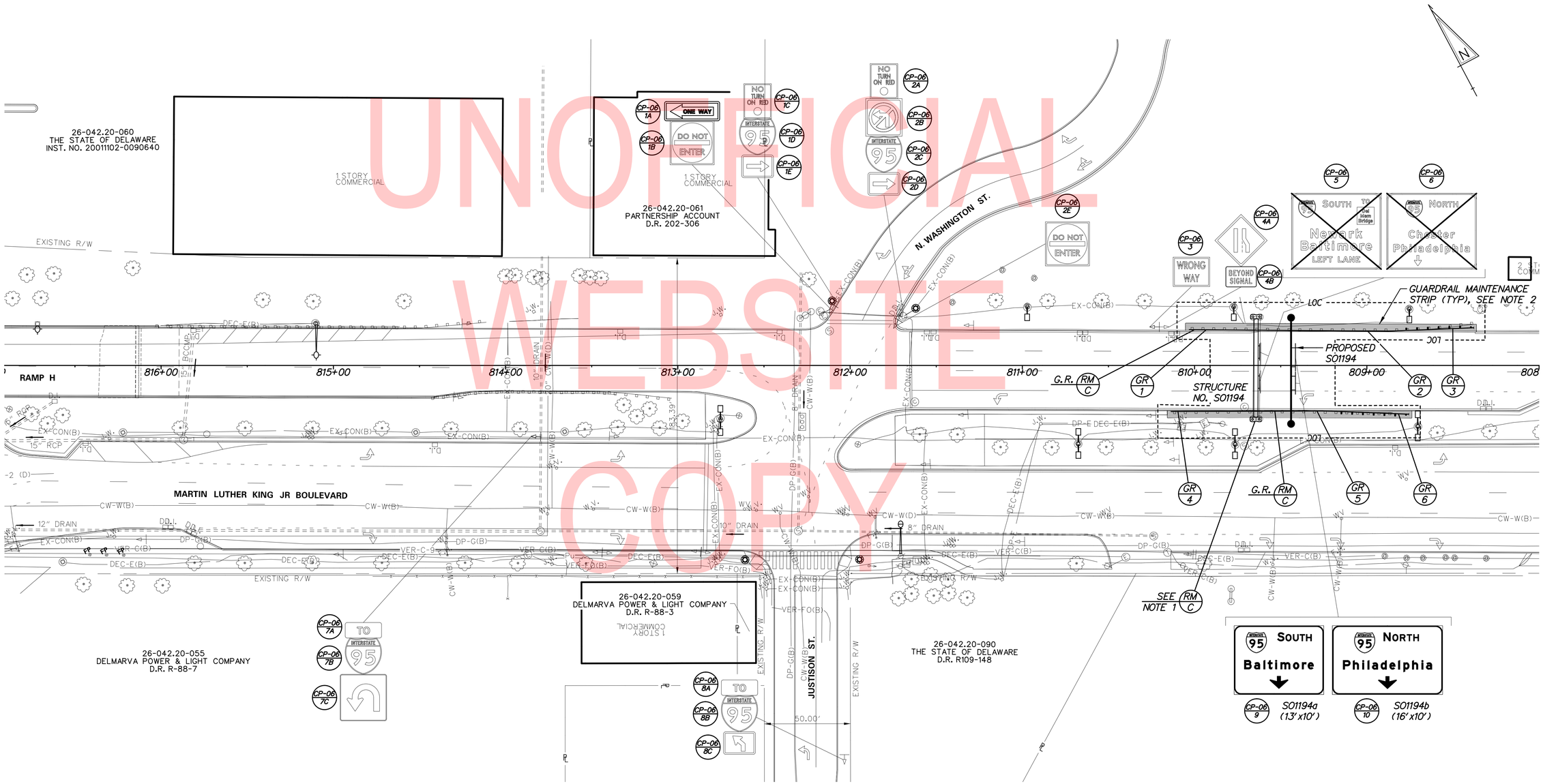

UNOFFICIAL WEBSITE COPY

ADDENDA / REVISIONS

SCALE 0 30 60 90 FEET

CANTILEVER AND OVERHEAD SIGN STRUCTURES, I-95

CONTRACT	BRIDGE NO.	N/A
T201907002	DESIGNED BY: AMP	
COUNTY	CHECKED BY: RMB	
NEW CASTLE		

CONSTRUCTION PLAN

CP-06
SECTION TY
SHEET NO. 38

8/13/2019
T:\Dover\Projects\425025.14\600_CADD\05_Official\CP06.dgn

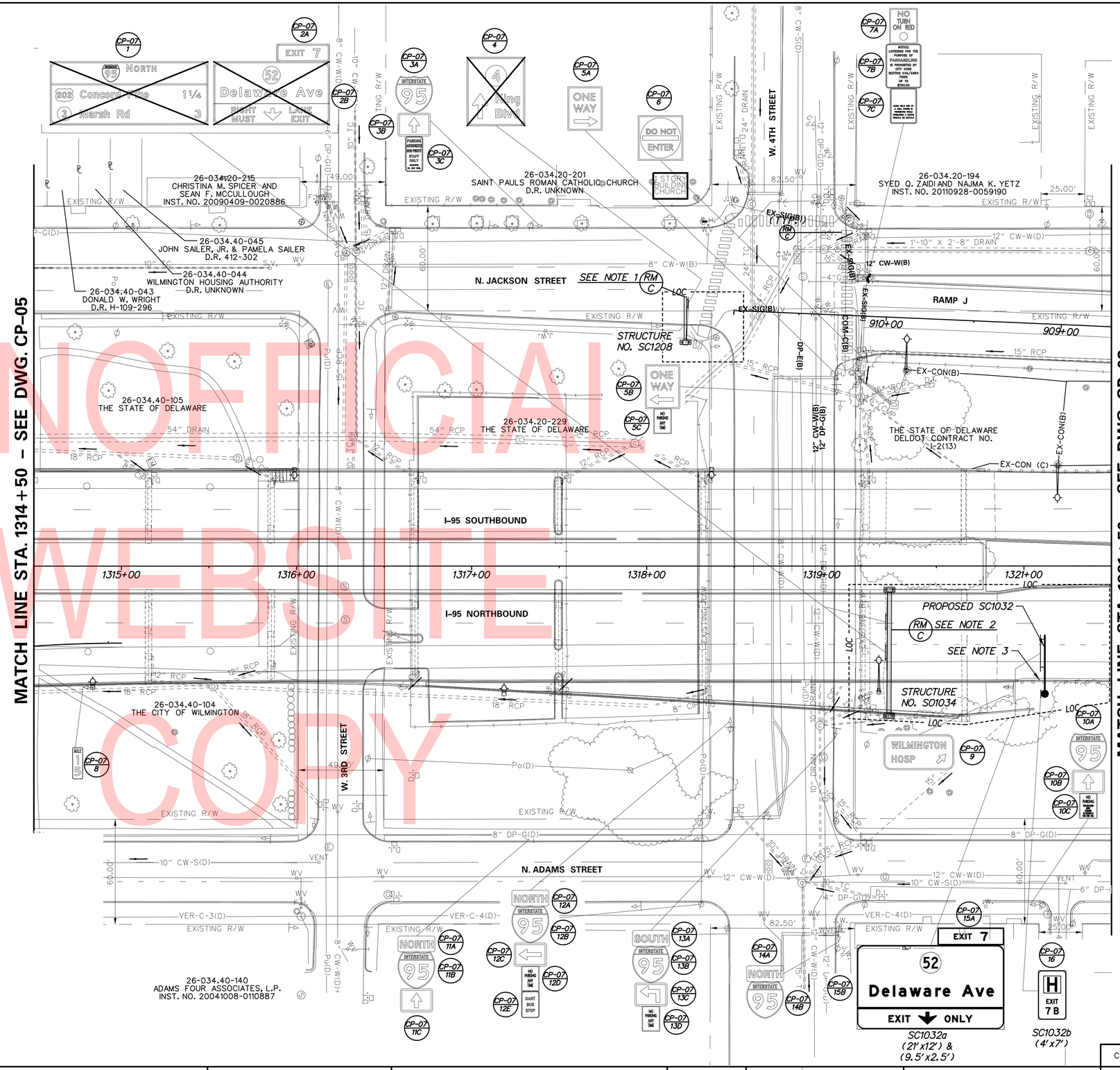

NOTES:

1. REMOVE EXISTING SIGN PANELS, SIGN SUPPORTS, CANTILEVER SIGN STRUCTURE AND FOUNDATION.
2. REMOVE EXISTING SIGN PANEL, SIGN SUPPORTS, AND OVERHEAD SIGN STRUCTURE. SIGN STRUCTURE SUPPORT BRACKET TO BE REMOVED ON A FUTURE CONTRACT BY OTHERS. DO NOT DAMAGE METAL BARRIER PLATE OR DECORATIVE FENCE ON TOP OF BARRIER.
3. REMOVE AND REINSTALL EXISTING GUARDRAIL AS NEEDED TO CONSTRUCT THE SIGN STRUCTURE FOUNDATION. PAYMENT SHALL BE INCIDENTAL TO ITEM 201000.

UNOFFICIAL WEBSITE COPY

ADDENDA / REVISIONS	

SCALE 0 30 60 90 FEET

CANTILEVER AND OVERHEAD SIGN STRUCTURES, I-95

CONTRACT	BRIDGE NO.	N/A
T201907002	DESIGNED BY: AMP	
COUNTY	CHECKED BY: RMB	
NEW CASTLE		

CONSTRUCTION PLAN

CP-07
SECTION
TY
SHEET NO.
39

8/13/2019
T:\Dover\Projects\425025.14.600_CADD\05_Official\CP07.dgn

UTILITY TEST HOLE SCHEDULE						
NO.	UTILITY	STATION	OFFSET	GRND EL.	COVER	O.D. & MATERIAL
TH-221	DELDOT	1324+64.61	72.60	69.41	1.23	2" ELEC. COND.

NOTES:

1. REMOVE EXISTING BRIDGE MOUNTED SIGN PANELS AND SIGN SUPPORTS. SIGN STRUCTURE SUPPORT BRACKET TO BE REMOVED ON A FUTURE CONTRACT BY OTHERS.
2. REMOVE AND REINSTALL EXISTING GUARDRAIL AS NEEDED TO CONSTRUCT THE SIGN STRUCTURE FOUNDATION. PAYMENT SHALL BE INCIDENTAL TO ITEM 201000.

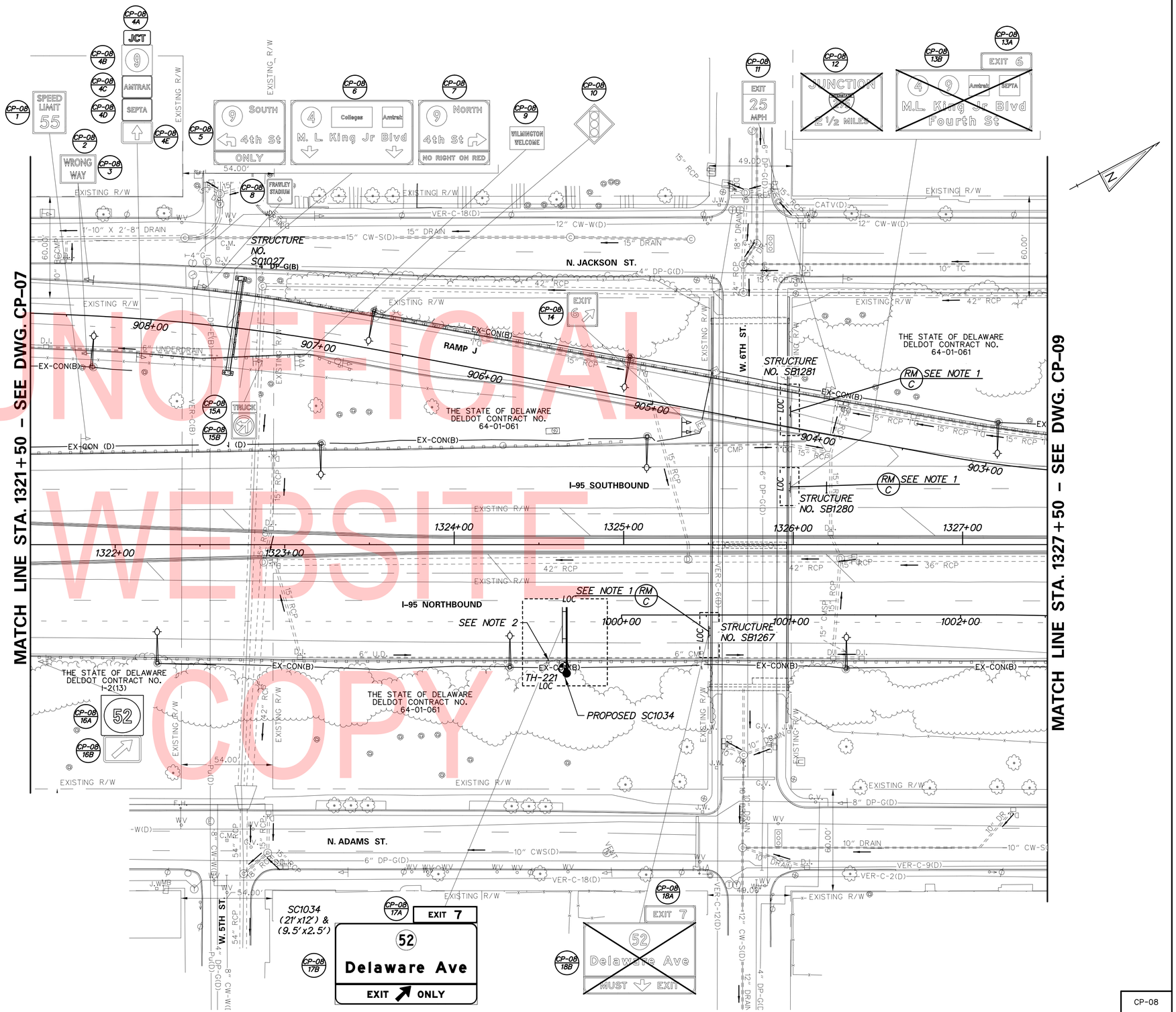

UNOFFICIAL WEBSITE COPY

ADDENDA / REVISIONS

SCALE 0 30 60 90 FEET

CANTILEVER AND OVERHEAD SIGN STRUCTURES, I-95

CONTRACT	BRIDGE NO.	N/A
T201907002	DESIGNED BY: AMP	
COUNTY	CHECKED BY: RMB	
NEW CASTLE		

CONSTRUCTION PLAN

CP-08
SECTION
TY
SHEET NO.
40

8/13/2019
T:\Dover\Projects\425025.14\600_CADD\05_Official\CP08.dgn

UTILITY TEST HOLE SCHEDULE						
NO.	UTILITY	STATION	OFFSET	GRND EL.	COVER	O.D. & MATERIAL
TH-222	DELDOT	900+91.95	21.79	70.66	1.46	2" ELEC. COND.

NOTES:

1. REMOVE EXISTING BRIDGE MOUNTED SIGN PANELS AND SIGN SUPPORTS. SIGN STRUCTURE SUPPORT BRACKET TO BE REMOVED ON A FUTURE CONTRACT BY OTHERS.
2. REMOVE AND REINSTALL EXISTING GUARDRAIL AS NEEDED TO CONSTRUCT THE SIGN STRUCTURE FOUNDATION. PAYMENT SHALL BE INCIDENTAL TO ITEM 201000.

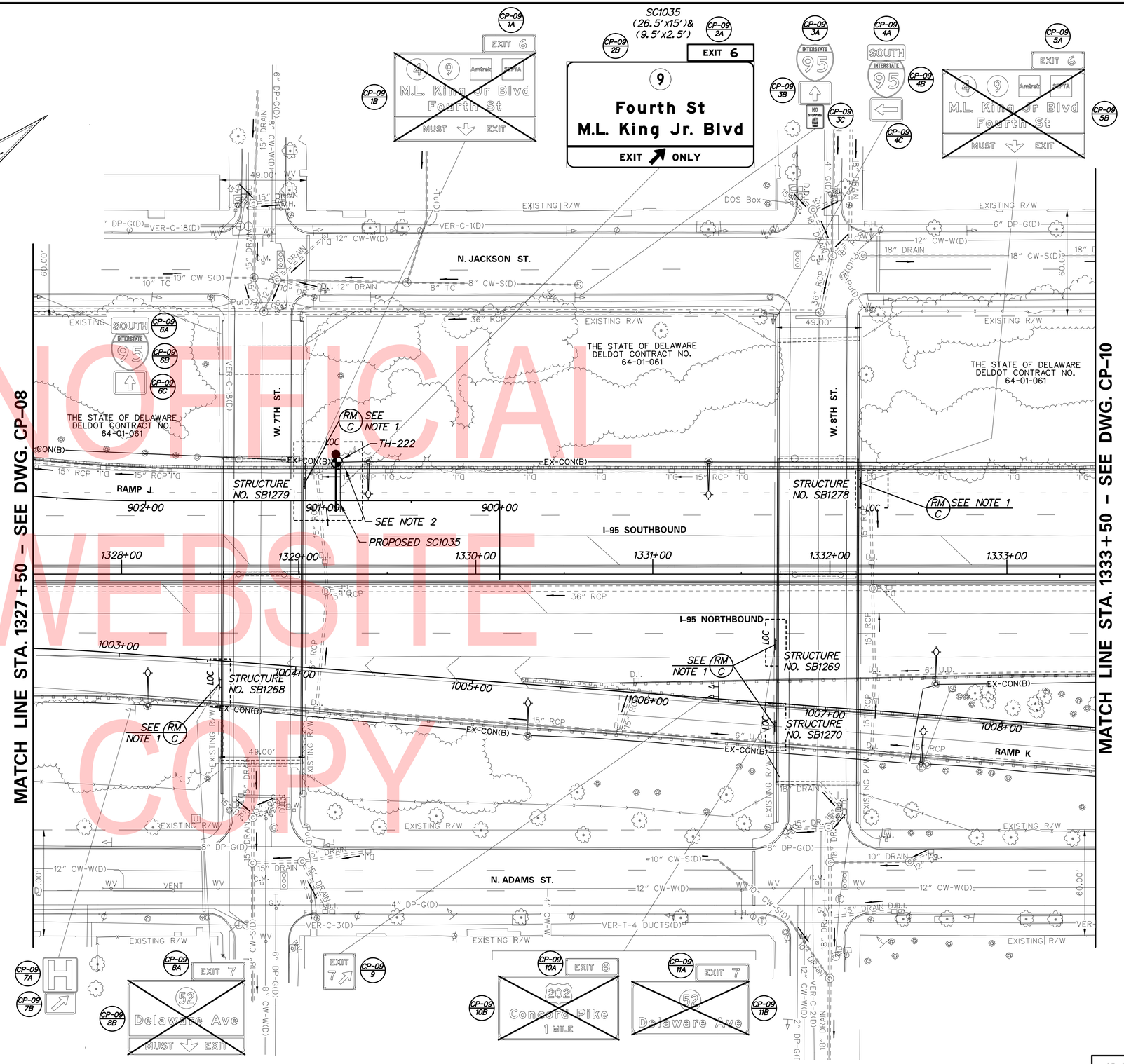

UNOFICIAL WEBSITE COPY

ADDENDA / REVISIONS	

SCALE 0 30 60 90 FEET

CANTILEVER AND OVERHEAD SIGN STRUCTURES, I-95

CONTRACT	BRIDGE NO.	N/A
T201907002	DESIGNED BY: AMP	
COUNTY	CHECKED BY: RMB	
NEW CASTLE		

CONSTRUCTION PLAN

CP-09
SECTION
TY
SHEET NO.
41

8/13/2019
T:\Dover\Projects\425025.14\600_CADD\05_Official\CP09.dgn

UTILITY TEST HOLE SCHEDULE						
NO.	UTILITY	STATION	OFFSET	GRND EL.	COVER	O. D. & MATERIAL
TH-223	DELDOT	1336+61.66	60.04	75.77	1.26	2" ELEC. COND.
TH-224	DELDOT	110+91.05	22.10	76.56	1.90	2" ELEC. COND.
TH-225	DELDOT	1337+37.25	123.17	94.59	2.50	2" ELEC. COND.
TH-226	DELDOT	1337+41.37	123.17	95.04	2.52	2" ELEC. COND.
TH-227	DELDOT	1337+47.08	122.54	94.20	2.87	4" METALLIC
TH-228	DELDOT	1337+49.03	132.83	95.73	0.89	2½" METALLIC

NOTES:

1. REMOVE EXISTING BRIDGE MOUNTED SIGN PANELS AND SIGN SUPPORTS. SIGN STRUCTURE SUPPORT BRACKET TO BE REMOVED ON A FUTURE CONTRACT BY OTHERS.
2. REMOVE EXISTING SIGN PANEL, SIGN SUPPORT, CANTILEVER SIGN STRUCTURE AND FOUNDATION.
3. REMOVE AND REINSTALL EXISTING GUARDRAIL AS NEEDED TO CONSTRUCT THE SIGN STRUCTURE FOUNDATION. PAYMENT SHALL BE INCIDENTAL TO ITEM 201000.
4. UTILITIES HAVE BEEN ABANDONED. REMOVE EXISTING CONDUIT THAT INTEREFERES WITH PLACEMENT OF THE DRILLED SHAFT FOUNDATION FOR SC1229. PAYMENT FOR REMOVAL OF CONDUIT SHALL BE INCIDENTAL TO ITEM 211000.

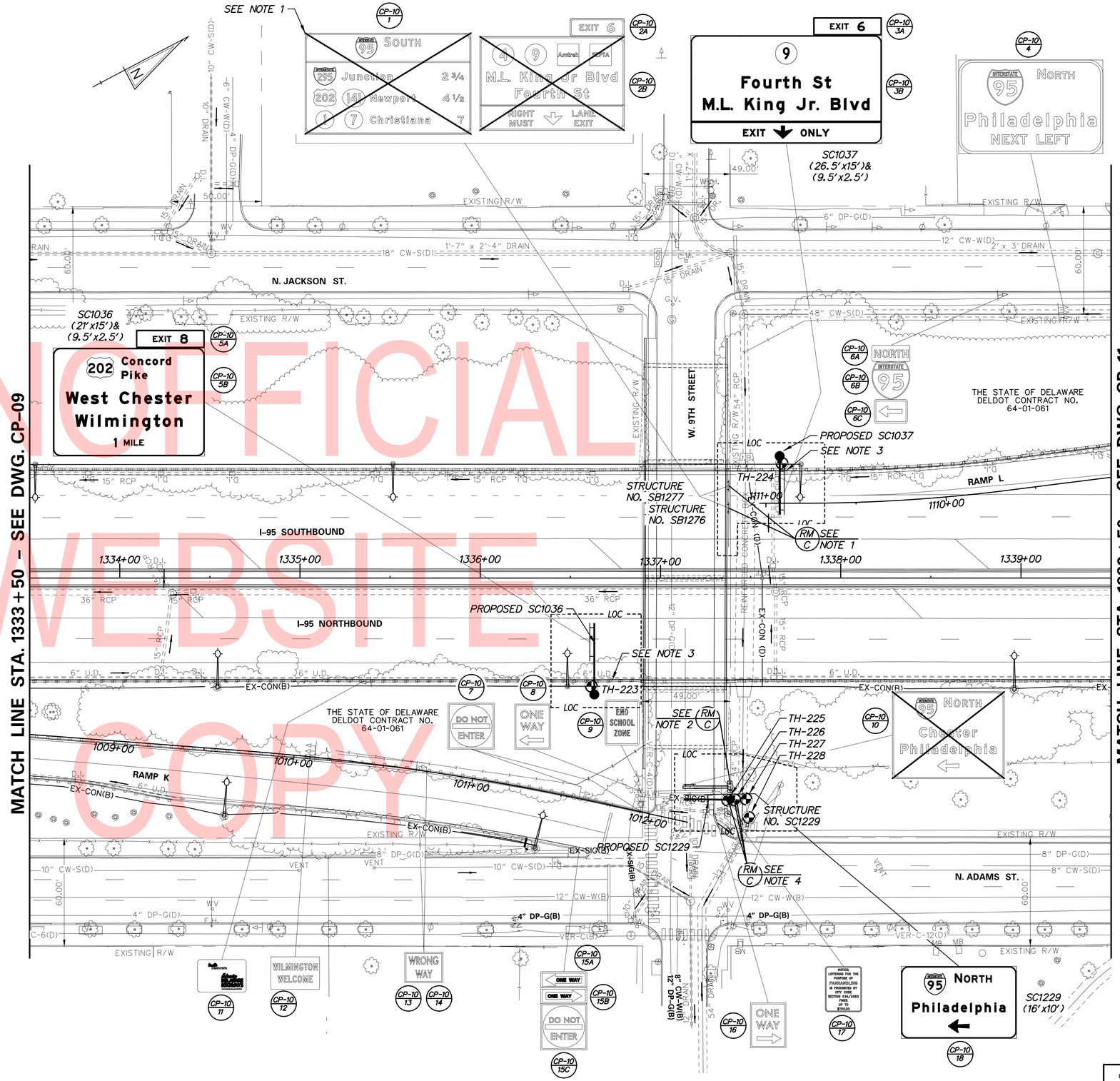

UNOFFICIAL WEBSITE COPY

ADDENDA / REVISIONS

SCALE 0 30 60 90 FEET

CANTILEVER AND OVERHEAD SIGN STRUCTURES, I-95

CONTRACT	BRIDGE NO.	N/A
T201907002	DESIGNED BY: AMP	
COUNTY		
NEW CASTLE	CHECKED BY: RMB	

CONSTRUCTION PLAN

CP-10
SECTION
TY
SHEET NO.
42

8/13/2019
T:\Dover\Projects\425025.14\600_CADD\05_Official\CP10.dgn

FENCE SCHEDULE

NO.	QTY.	DESCRIPTION	NOTES
1	124 LF	CHAINLINK FENCE, 5 FT. HIGH (ITEM 727000)	STA. 1200+60.33, 38.60' LT. TO STA. 1201+82.41, 22.71' LT. (+/-)

NOTES:
1. REMOVE EXISTING SIGN PANEL, SIGN SUPPORTS, CANTILEVER SIGN STRUCTURE AND FOUNDATION.

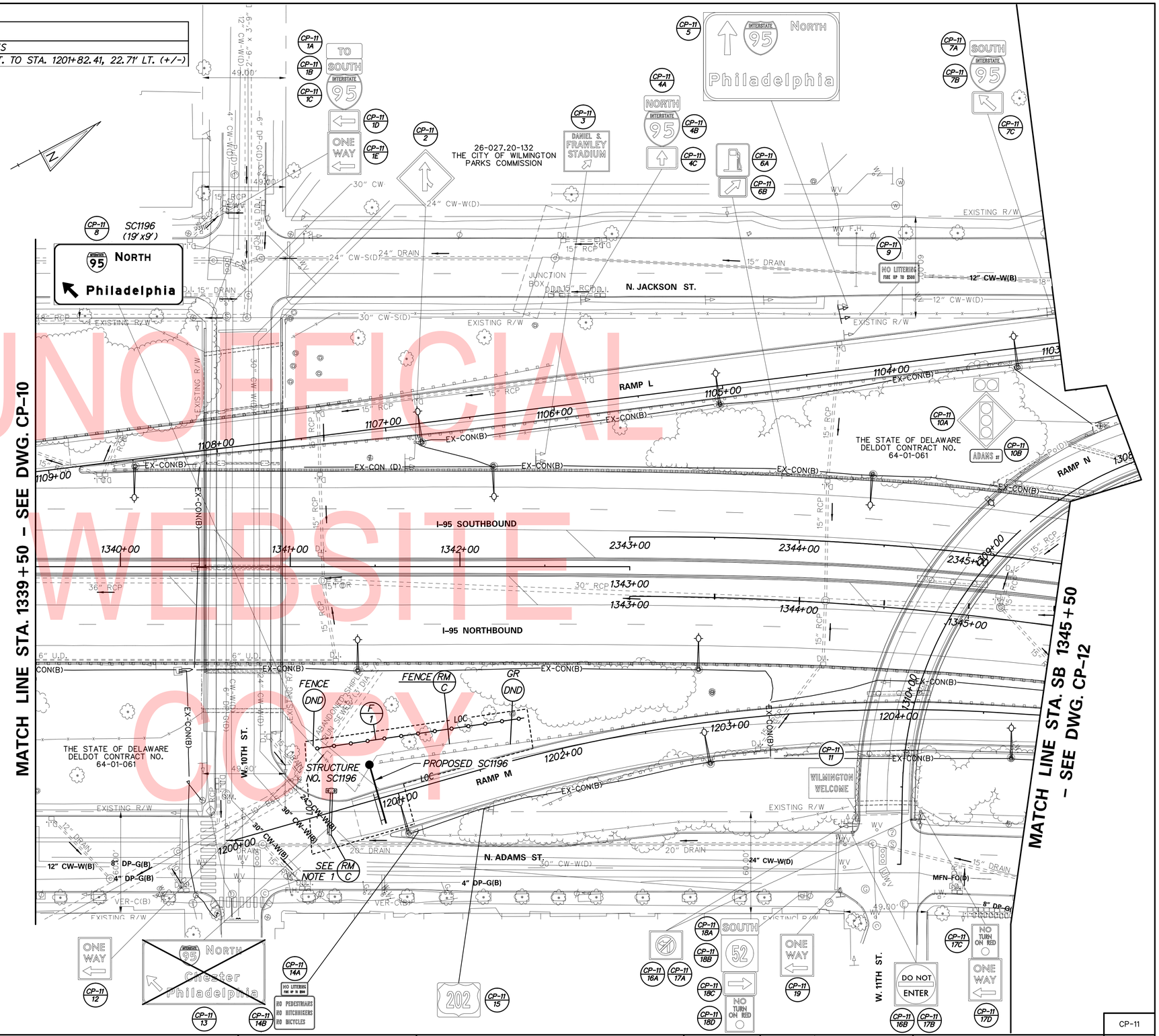

UNOFFICIAL WEBSITE COPY

ADDENDA / REVISIONS	

SCALE 0 30 60 90 FEET

CANTILEVER AND OVERHEAD SIGN STRUCTURES, I-95

CONTRACT	BRIDGE NO.	N/A
T201907002	DESIGNED BY: AMP	
COUNTY	CHECKED BY: RMB	
NEW CASTLE		

CONSTRUCTION PLAN

CP-11
SECTION
TY
SHEET NO.
43

8/13/2019
T:\Dover\Projects\425025.14\600_CADD\05_Official\CP11.dgn

NOTES:

1. REMOVE EXISTING SIGN PANEL, SIGN SUPPORTS, CANTILEVER SIGN STRUCTURE AND FOUNDATION.
2. REMOVE AND REINSTALL EXISTING GUARDRAIL AS NEEDED TO REMOVE THE EXISTING SIGN STRUCTURE AND FOUNDATION. PAYMENT SHALL BE INCIDENTAL TO ITEM 201000.

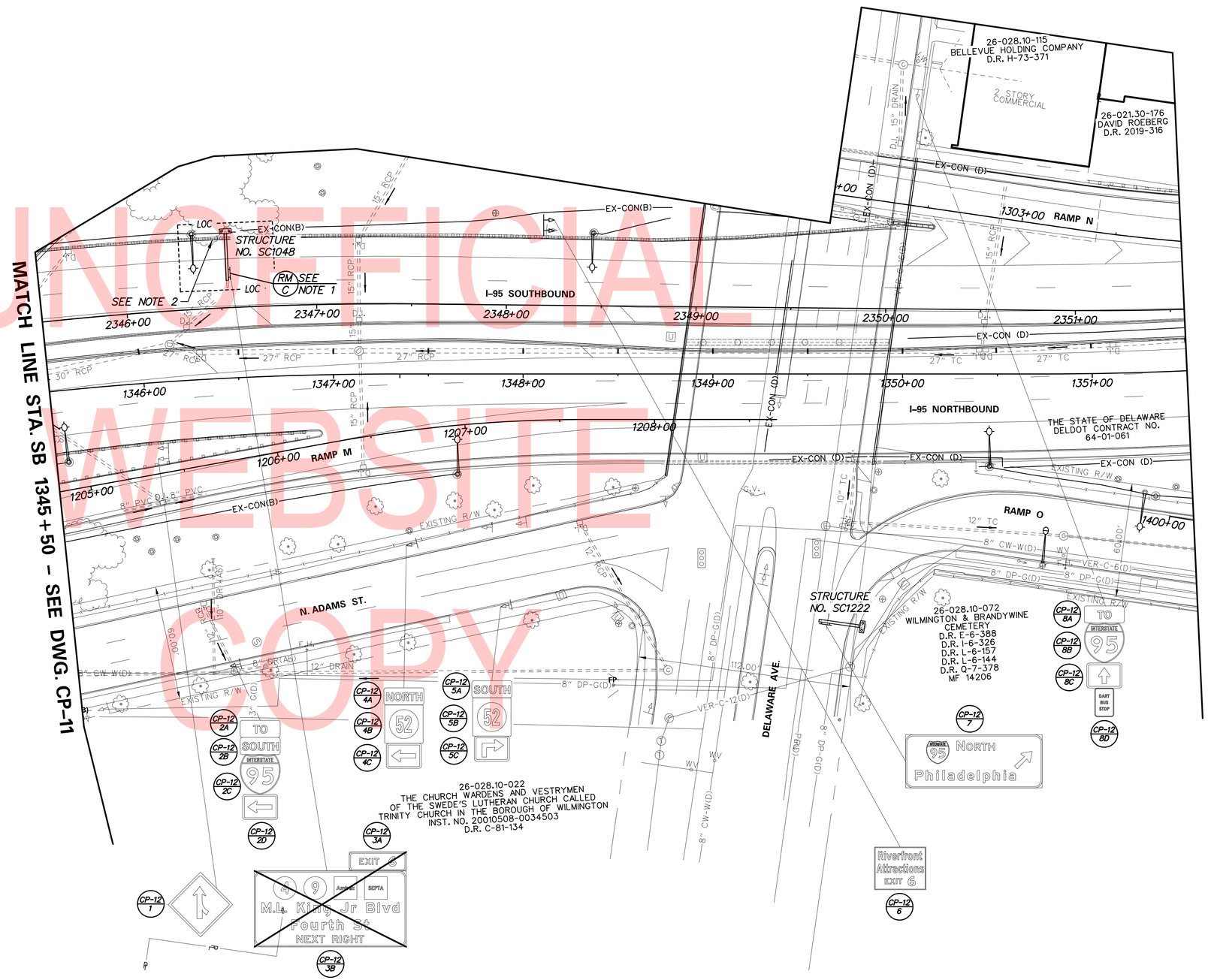

UNOFFICIAL WEBSITE COPY

ADDENDA / REVISIONS	

SCALE 0 30 60 90 FEET

CANTILEVER AND OVERHEAD SIGN STRUCTURES, I-95

CONTRACT	BRIDGE NO.	N/A
T201907002	DESIGNED BY: AMP	
COUNTY	CHECKED BY: RMB	
NEW CASTLE		

CONSTRUCTION PLAN

CP-12
SECTION
TY
SHEET NO.
44

8/13/2019
T:\Dover\Projects\425025.14\600_CADD\05_Official\CP12.dgn

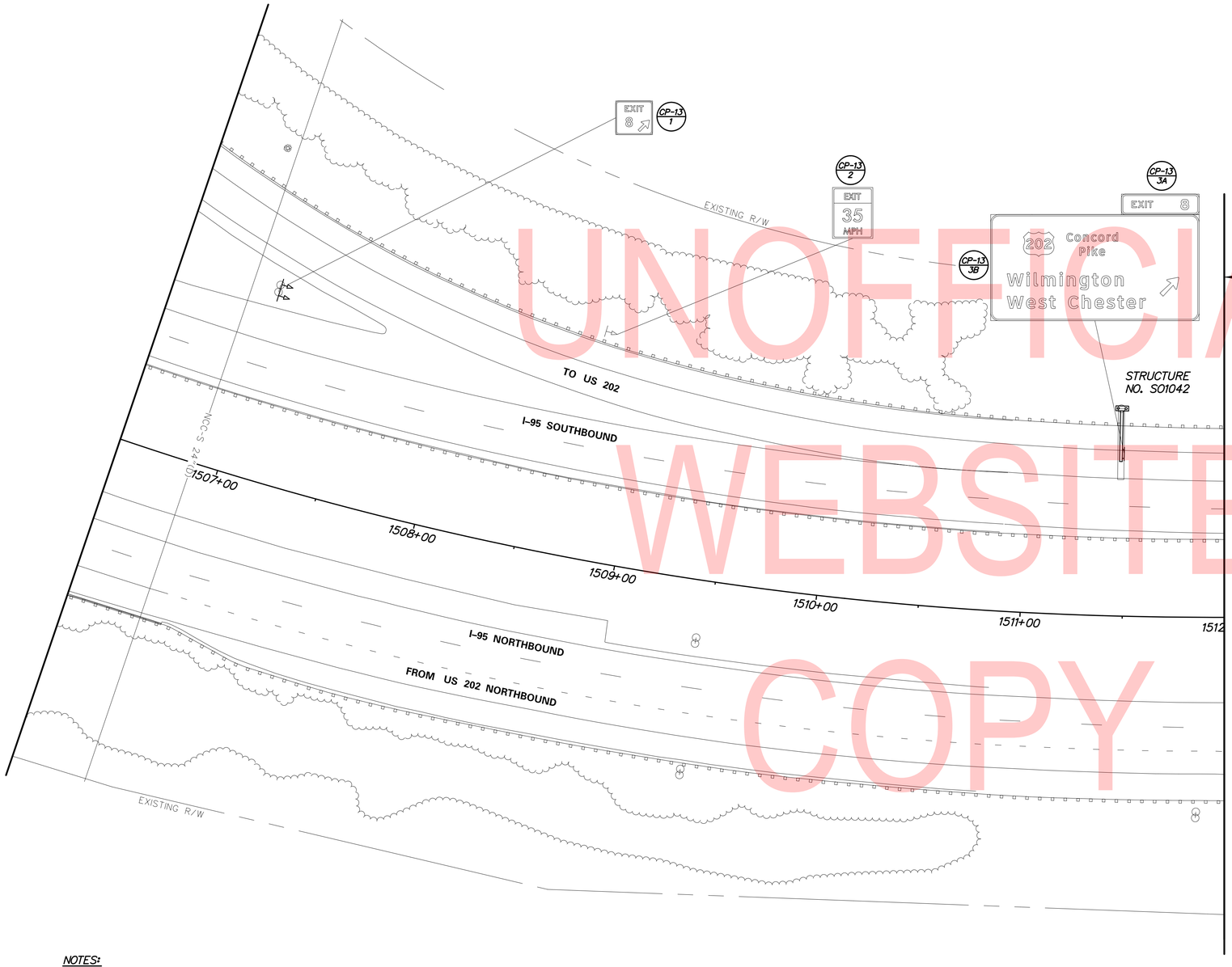

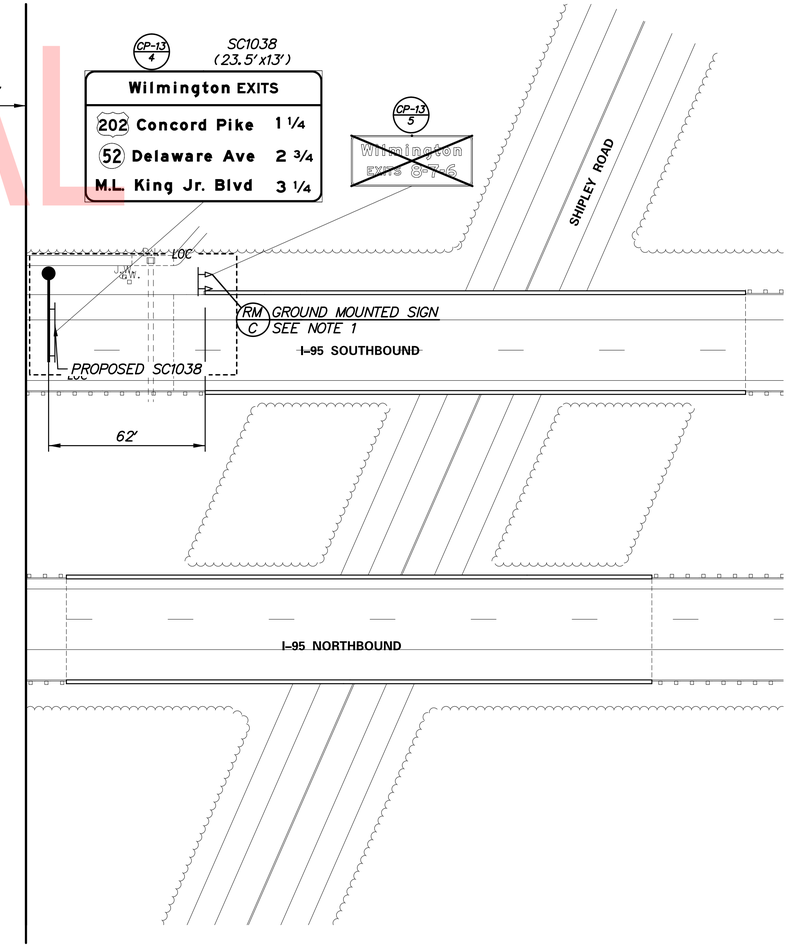

NOTES:
1. REMOVE EXISTING SIGN PANEL, GROUND MOUNTED SIGN STRUCTURE AND FOUNDATION.

UNOFFICIAL WEBSITE COPY

ADDENDA / REVISIONS	

SCALE 0 30 60 90 FEET

CANTILEVER AND OVERHEAD SIGN STRUCTURES, I-95

CONTRACT	BRIDGE NO.	N/A
T201907002	DESIGNED BY: AMP	
COUNTY	CHECKED BY: RMB	
NEW CASTLE		

CONSTRUCTION PLAN

CP-13
SECTION
TY
SHEET NO.
45

8/13/2019
T:\Dover\Projects\425025,14\600_CADD\05_Official\CP13.dgn

PANEL DESIGNATION	DWG. NO.	QUANTITY	LEGEND	SIZE AREA	SIZE WIDTH	SIZE HEIGHT	COLOR LEGEND	COLOR BCKGRND	BORDER THICKNESS	BORDER RADIUS	ARROW	SHEILD	REMARKS
S01031a	CP-01	1	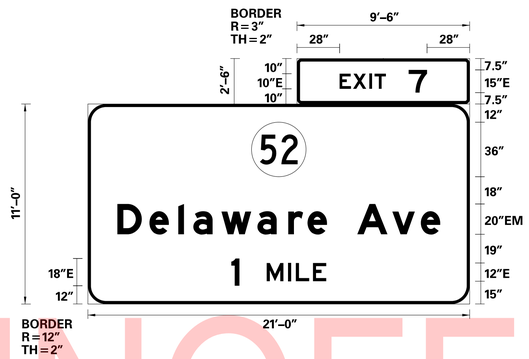	23.75	9'-6"	2'-6"	W	G	2"	3"	---	---	EXTRUDED ALUMINUM
				231.0	21'-0"	11'-0"	W	G	2"	12"	---	M1-5 (36x36)	EXTRUDED ALUMINUM
S01031b	CP-01	1	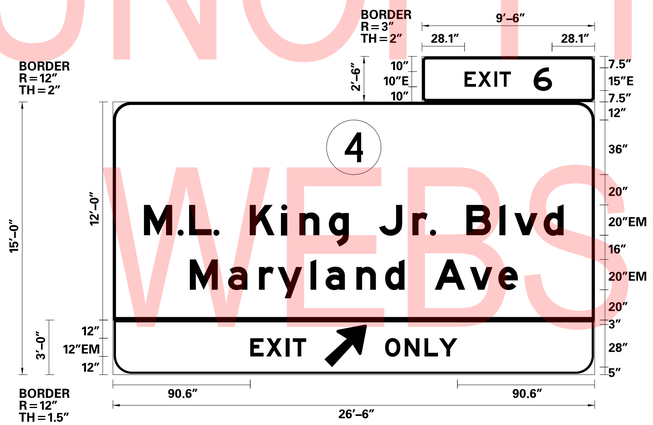	23.75	9'-6"	2'-6"	G	W	2"	3"	-	-	EXTRUDED ALUMINUM
				318.0	26'-6"	12'-0"	W	G	2"	12"	-	M1-5 (36"x36")	EXTRUDED ALUMINUM
				79.5	26'-6"	3'-0"	BLK	Y	1.5"	12"	STD. UP ARROW @ 45°	-	EXTRUDED ALUMINUM

COLORS: BLK=BLACK, BLU=BLUE, BRO=BROWN, G=GREEN, R=RED, W=WHITE, Y=YELLOW, FY=FLUORESCENT YELLOW, FYG=FLUORESCENT YELLOW GREEN, PUR=PURPLE.

UNOFFICIAL WEBSITE COPY

ADDENDA / REVISIONS	NOT TO SCALE	CANTILEVER AND OVERHEAD SIGN STRUCTURES, I-95	CONTRACT T201907002	BRIDGE NO. N/A	GUIDE SIGN DIMENSIONS & DETAILS	SS-01
			COUNTY NEW CASTLE	DESIGNED BY: AMP		SECTION TY
				CHECKED BY: JWS		SHEET NO. 46

PANEL DESIGNATION	DWG. NO.	QUANTITY	LEGEND	SIZE AREA	SIZE WIDTH	SIZE HEIGHT	COLOR LEGEND	COLOR BCKGRND	BORDER THICKNESS	BORDER RADIUS	ARROW	SHEILD	REMARKS
SC1209a	CP-05	1	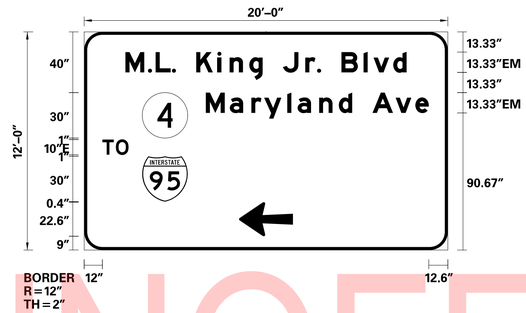	240.0	20'-0"	12'-0"	W	G	2"	12"	STD. UP ARROW @ 270°	MI-1 (30"x30") MI-5 (30"x30")	EXTRUDED ALUMINUM
SC1209b	CP-05	1	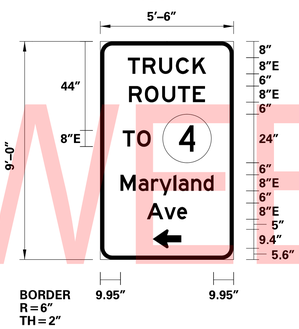	49.5	9'-0"	5'-6"	W	G	2"	6"	STD. UP ARROW @ 270°	MI-5 (24"x24")	EXTRUDED ALUMINUM
SO1194a	CP-06	1	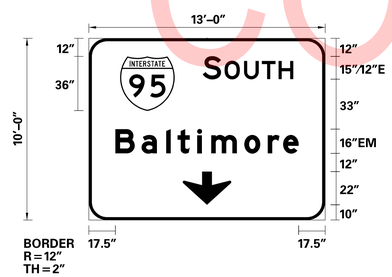	130.0	13'-0"	10'-0"	W	G	2"	12"	STD. DOWN ARROW @ 0°	MI-1 (36"x36")	EXTRUDED ALUMINUM

COLORS: BLK=BLACK, BLU=BLUE, BRO=BROWN, G=GREEN, R=RED, W=WHITE, Y=YELLOW, FY=FLUORESCENT YELLOW, FYG=FLUORESCENT YELLOW GREEN, PUR=PURPLE.

UNOFFICIAL WEBSITE COPY

ADDENDA / REVISIONS

NOT TO SCALE

CANTILEVER AND OVERHEAD SIGN STRUCTURES, I-95

CONTRACT T201907002 | COUNTY NEW CASTLE | BRIDGE NO. N/A | DESIGNED BY: AMP | CHECKED BY: JWS

GUIDE SIGN DIMENSIONS & DETAILS

SS-02 | SECTION TY | SHEET NO. 47

8/13/2019 T:\Dover\Projects\425025.14\600_CADD\05_Official\SS02.dgn

PANEL DESIGNATION	DWG. NO.	QUANTITY	LEGEND	SIZE AREA	SIZE WIDTH	SIZE HEIGHT	COLOR LEGEND	COLOR BCKGRND	BORDER THICKNESS	BORDER RADIUS	ARROW	SHEILD	REMARKS
S01194b	CP-06	1		160.0	16'-0"	10'-0"	W	G	2"	12"	STD. DOWN ARROW @ 0°	MI-1 (36"x36")	EXTRUDED ALUMINUM
SC1032a	CP-07	1	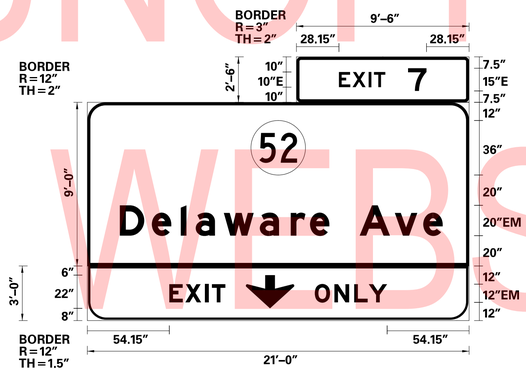	23.75	9'-6"	2'-6"	W	G	2"	3"	-	-	EXTRUDED ALUMINUM
				189.0	21'-0"	9'-0"	W	G	2"	12"	-	MI-5 (36"x36")	EXTRUDED ALUMINUM
				63.0	21'-0"	3'-0"	BLK	Y	1.5"	12"	STD. DOWN ARROW @ 0°	-	EXTRUDED ALUMINUM
SC1032b	CP-07	1	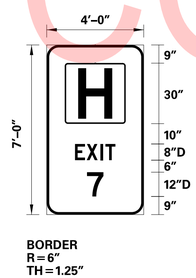	28.0	7'-0"	4'-0"	W	G	1.25"	6"	-	D9-2 (30"X30")	EXTRUDED ALUMINUM

COLORS: BLK=BLACK, BLU=BLUE, BRO=BROWN, G=GREEN, R=RED, W=WHITE, Y=YELLOW, FY=FLUORESCENT YELLOW, FYG=FLUORESCENT YELLOW GREEN, PUR=PURPLE.

UNOFFICIAL WEBSITE COPY

ADDENDA / REVISIONS

NOT TO SCALE

CANTILEVER AND OVERHEAD SIGN STRUCTURES, I-95

CONTRACT	BRIDGE NO.	N/A
T201907002	DESIGNED BY: AMP	
COUNTY		
NEW CASTLE	CHECKED BY: JWS	

GUIDE SIGN DIMENSIONS & DETAILS

SS-03
SECTION
TY
SHEET NO.
48

8/13/2019
T:\Dover\Projects\425025.14\600_CADD\05_Official\SS03.dgn

PANEL DESIGNATION	DWG. NO.	QUANTITY	LEGEND	SIZE AREA	SIZE WIDTH	SIZE HEIGHT	COLOR LEGEND	COLOR BCKGRND	BORDER THICKNESS	BORDER RADIUS	ARROW	SHEILD	REMARKS
SC1034	CP-08	1	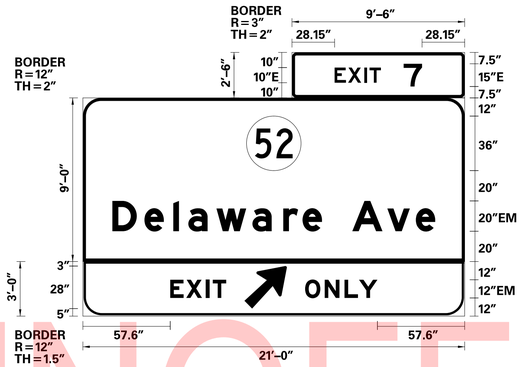	23.75	9'-6"	2'-6"	W	G	2"	3"	-	-	EXTRUDED ALUMINUM
				189.0	21'-0"	9'-0"	W	G	2"	12"	-	M1-5 (36"x36")	EXTRUDED ALUMINUM
				63.0	21'-0"	3'-0"	BLK	Y	1.5"	12"	STD. UP ARROW @ 45°	-	EXTRUDED ALUMINUM
SC1035	CP-09	1	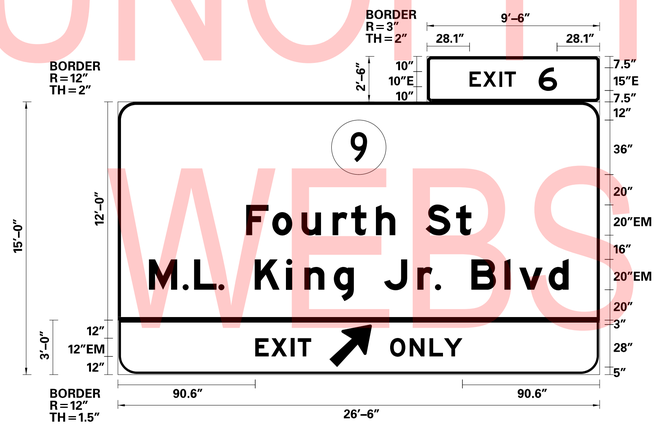	23.75	9'-6"	2'-6"	W	G	2"	3"	-	-	EXTRUDED ALUMINUM
				318.0	26'-6"	12'-0"	W	G	2"	12"	-	M1-5 (36"x36")	EXTRUDED ALUMINUM
				79.5	26'-6"	3'-0"	BLK	Y	1.5"	12"	STD. UP ARROW @ 45°	-	EXTRUDED ALUMINUM
SC1229	CP-10	1		160.0	16'-0"	10'-0"	W	G	2"	12"	STD. UP ARROW @ 270°	M1-1 (36"x36")	EXTRUDED ALUMINUM

COLORS: BLK=BLACK, BLU=BLUE, BRO=BROWN, G=GREEN, R=RED, W=WHITE, Y=YELLOW, FY=FLUORESCENT YELLOW, FYG=FLUORESCENT YELLOW GREEN, PUR=PURPLE.

UNOFFICIAL WEBSITE COPY

ADDENDA / REVISIONS	NOT TO SCALE	CANTILEVER AND OVERHEAD SIGN STRUCTURES, I-95	CONTRACT T201907002	BRIDGE NO. N/A	GUIDE SIGN DIMENSIONS & DETAILS	SS-04
			COUNTY NEW CASTLE	DESIGNED BY: AMP		SECTION TY
				CHECKED BY: JWS		SHEET NO. 49

PANEL DESIGNATION	DWG. NO.	QUANTITY	LEGEND	SIZE AREA	SIZE WIDTH	SIZE HEIGHT	COLOR LEGEND	COLOR BCKGRND	BORDER THICKNESS	BORDER RADIUS	ARROW	SHEILD	REMARKS
SC1036	CP-10	1	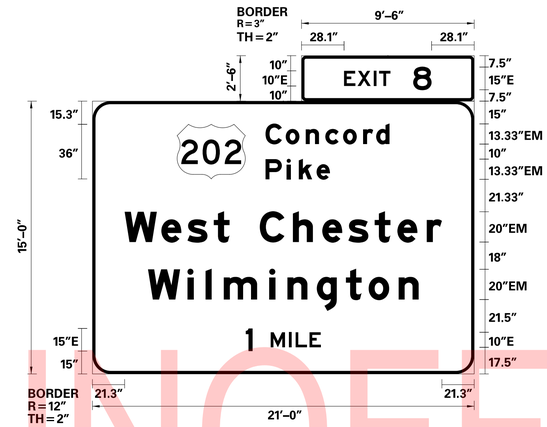	23.75	9'-6"	2'-6"	W	G	2"	3"	-	-	EXTRUDED ALUMINUM
				315.0	21'-0"	15'-0"	W	G	2"	12"	-	M1-4 (45"x36")	EXTRUDED ALUMINUM
SC1037	CP-10	1	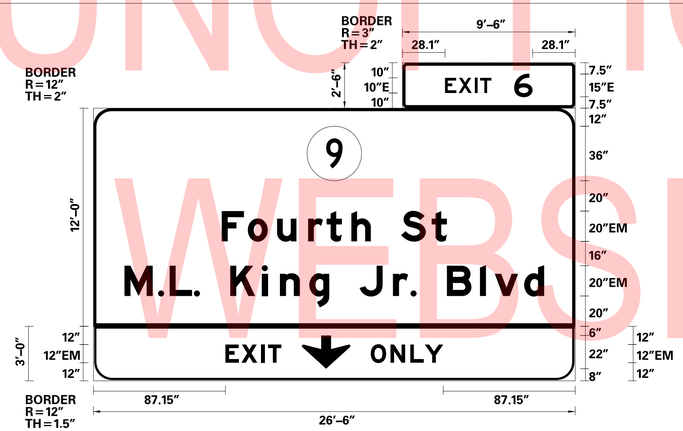	23.75	9'-6"	2'-6"	W	G	2"	3"	-	-	EXTRUDED ALUMINUM
				318.0	26'-6"	12'-0"	W	G	2"	12"	-	M1-5 (36"x36")	EXTRUDED ALUMINUM
				79.5	26'-6"	3'-0"	BLK	Y	1.5"	12"	STD. DOWN ARROW @ 0°	-	EXTRUDED ALUMINUM
SC1196	CP-11	1		171.0	19'-0"	9'-0"	W	G	2"	12"	STD. UP ARROW @ 315°	M1-1 (36"x36")	EXTRUDED ALUMINUM

COLORS: BLK=BLACK, BLU=BLUE, BRO=BROWN, G=GREEN, R=RED, W=WHITE, Y=YELLOW, FY=FLUORESCENT YELLOW, FYG=FLUORESCENT YELLOW GREEN, PUR=PURPLE.

UNOFFICIAL WEBSITE COPY

ADDENDA / REVISIONS

NOT TO SCALE

CANTILEVER AND OVERHEAD SIGN STRUCTURES, I-95

CONTRACT: T201907002
COUNTY: NEW CASTLE
BRIDGE NO.: N/A
DESIGNED BY: AMP
CHECKED BY: JWS

GUIDE SIGN DIMENSIONS & DETAILS

SS-05
SECTION: TY
SHEET NO.: 50

8/13/2019
T:\Dover\Projects\425025.14\600_CADD\05_Official\SS05.dgn

PANEL DESIGNATION	DWG. NO.	QUANTITY	LEGEND	SIZE AREA	SIZE WIDTH	SIZE HEIGHT	COLOR LEGEND	COLOR BCKGRND	BORDER THICKNESS	BORDER RADIUS	ARROW	SHEILD	REMARKS
SC1038	CP-13	1	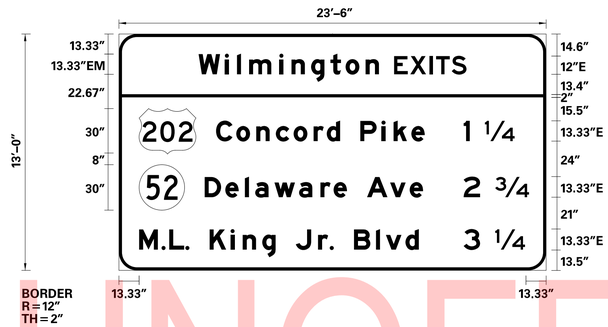	305.5	23'-6"	13'-0"	W	G	2"	12"	-	M1-4 (37.5" x30"), M1-5 (30"x30")	EXTRUDED ALUMINUM

COLORS: BLK=BLACK, BLU=BLUE, BRO=BROWN, G=GREEN, R=RED, W=WHITE, Y=YELLOW, FY=FLUORESCENT YELLOW, FYG=FLUORESCENT YELLOW GREEN, PUR=PURPLE.

UNOFFICIAL WEBSITE COPY

ADDENDA / REVISIONS

NOT TO SCALE

CANTILEVER AND OVERHEAD SIGN STRUCTURES, I-95

CONTRACT	BRIDGE NO.	N/A
T201907002	DESIGNED BY: AMP	
COUNTY		
NEW CASTLE	CHECKED BY: JWS	

GUIDE SIGN DIMENSIONS & DETAILS

SS-06
SECTION
TY
SHEET NO.
51

8/13/2019
T:\Dover\Projects\425025.14\600_CADD\05_Official\SS06.dgn

PERMANENT SIGN SCHEDULE

#	SHEET NO.	PLAN IDENTIFIER	SIGN DESIGNATION	QTY.	DESCRIPTION	SIGN WIDTH (IN)	SIGN HEIGHT (IN)	SIGN AREA (SF)	ITEM 819018 SINGLE POST (EACH)			ITEM 819019 INSTALLATION OR REMOVAL OF TRAFFIC SIGN(S) ON MULTIPLE SIGN POSTS (SF)			POST INSTALLATION TYPE	Code X11 12' Post (W/ Basepost)	ITEM 819016 4" HOLE, 0-6" (EACH)	ITEM 819017 4" HOLE, >6" (EACH)	REMARKS
									SIGN DISPOSITION	REMOVE	INSTALL	SIGN DISPOSITION	REMOVE	INSTALL					
1827	CP-01	1	D10-2a(12)	1	INTERMEDIATE REFERENCE LOCATION (2- Digit) - 12x48	12"	48"		REMAIN										
	CP-01	2		1	I-295 NORTH - LEFT EXIT - 1 3/4 MILES	132"	144"		REMOVE										ON OH STRUCTURE
	CP-01	3A		1	EXIT 7	114"	30"	23.8	NEW										SO1031a (9.5'x2.5')
	CP-01	3B		1	SR 52 - Delaware Ave - 1 MILE	252"	132"	231.0	NEW										SO1031a (21'x11')
	CP-01	4A		1	EXIT 6	114"	30"	23.8	NEW										SO1031b (9.5'x2.5')
	CP-01	4B		1	M.L. King Jr. Blvd/Maryland Ave - EXIT ONLY	318"	180"	397.5	NEW										SO1031b (26.5'x15')
	CP-01	5		1	I-95 NORTH - Delaware Ave/Concord Pike/Marsh Road	252"	144"		REMOVE										ON OH STRUCTURE
	CP-01	6A		1	EXIT 6	90"	30"		REMOVE										ON OH STRUCTURE
	CP-01	6B		1	M.L. King Jr. Blvd/Maryland Ave - EXIT ONLY	234"	114"		REMOVE										ON OH STRUCTURE
1610	CP-01	7A	M6-2_R(21)	1	DIRECTIONAL ARROW (Right - upward 45) - 21x15	21"	15"		REMOVE										ON OH STRUCTURE
424	CP-01	7B	R7-4-DE(18)	1	NO STOPPING, STANDING, OR PARKING - 18x24	18"	24"		REMOVE										ON OH STRUCTURE
	CP-02	1A		1	EXIT 7	90"	30"		REMOVE										ON OH STRUCTURE
	CP-02	1B		1	SR 52 - Delaware Ave - NEXT RIGHT	252"	72"		REMOVE										ON OH STRUCTURE
308	CP-02	2	R4-5(48)	1	TRUCKS USE RIGHT LANE - 48x60	48"	60"		REMOVE										ON OH STRUCTURE
	CP-02	3A		1	EXIT 6	90"	30"		REMOVE										ON OH STRUCTURE
	CP-02	3B		1	M.L. King Jr. Blvd/Maryland Ave - EXIT ONLY	240"	150"		REMOVE										ON OH STRUCTURE
10	CP-03	1	R1-2(60)	1	YIELD	60"	60"		REMAIN										
	CP-03	2A		1	"FRAWLEY STADIUM ALT. ENT" (Left)	24"	30"		REMAIN										
	CP-03	2B		1	"HAND HELD USE OF A CELL PHONE IS PROHIBITED.."	18"	24"		REMAIN										
362	CP-03	2C	R5-1a(36)	1	WRONG WAY - 36x24	36"	24"		REMAIN										
1534	CP-03	3A	M4-5(24)	1	TO - 24x12	24"	12"		REMAIN										
1472	CP-03	3B	M1-1(24)	1	INTERSTATE ROUTE (2 - Digit Sign) - 24x24	24"	24"		REMAIN										
1639	CP-03	3C	M6-7_L(21)	1	DIRECTIONAL ARROW AUXILIARY (Up - 45 Left) - 21x15	21"	15"		REMAIN										
422	CP-03	4	R7-4	1	NO STANDING ANY TIME	12"	18"		REMAIN										
111	CP-03	5	R3-2(36)	1	LEFT TURN PROHIBITION (Symbol) - 36x36	36"	36"		REMAIN										
394	CP-03	6A	R6-1_L(36)	1	ONE WAY (ENCLOSED IN LEFT ARROW) - 36x12	36"	12"		REMAIN										
392	CP-03	6B	R6-1_R(36)	1	ONE WAY (ENCLOSED IN RIGHT ARROW) - 36x12	36"	12"		REMAIN										
394	CP-03	7A	R6-1_L(36)	1	ONE WAY (ENCLOSED IN LEFT ARROW) - 36x12	36"	12"		REMAIN										
359	CP-03	7B	R5-1(36)	1	DO NOT ENTER - 36x36	36"	36"		REMAIN										
392	CP-03	7C	R6-1_R(36)	1	ONE WAY (ENCLOSED IN RIGHT ARROW) - 36x12	36"	12"		REMAIN										
	CP-03	9A		1	AMTRAK	24"	18"		REMAIN										
	CP-03	9B		1	SEPTA	24"	18"		REMAIN										
	CP-03	9C		1	DIRECTIONAL ARROW AUXILIARY (RIGHT)	24"	12"		REMAIN										
	CP-03	10		1	"WILMINGTON - Riverfront/Frawley Stadium/Train Station"	36"	34"		REMAIN										
362	CP-03	11	R5-1a(36)	1	WRONG WAY - 36x24	36"	24"		REMAIN										
1536	CP-03	12A	M4-6(12)	1	END - 12x6	12"	6"		REMAIN										
424	CP-03	12B	R7-4-DE(18)	1	NO STOPPING, STANDING, OR PARKING - 18x24	18"	24"		REMAIN										
10	CP-03	13A	R1-2(60)	1	YIELD	60"	60"					REMAIN							
	CP-03	13B		1	NO MERGE AREA	18"	12"		REMAIN										
	CP-03	13C		1	"Wilmington Station Septa Amtrak" (Right)	24"	30"		REMAIN										
42	CP-03	14	R2-1-25(24)	1	SPEED LIMIT (25 MPH - 24x30)	24"	30"		REMAIN										
42	CP-03	15A	R2-1-25(24)	1	SPEED LIMIT (25 MPH - 24x30)	24"	30"		REMAIN										
110	CP-03	15B	R3-2(24)	1	LEFT TURN PROHIBITION (Symbol) - 24x24	24"	24"		REMAIN										
8	CP-04	1	R1-2(36)	1	YIELD	36"	36"		REMAIN										
42	CP-04	2	R2-1-25(24)	1	SPEED LIMIT (25 MPH - 24x30)	24"	30"		REMAIN										
	CP-04	3		1	I-95 SOUTH - Del Mem Bridge/Baltimore	240"	114"		REMAIN										ON OH STRUCTURE
	CP-04	4A		1	"NO PEDESTRIANS/NO HITCHHIKERS/NO BICYCLES"	38"	20"		REMAIN										ON GM STRUCTURE
	CP-04	4B		1	"G.V.W. LIMIT - 46,000 LBS/THREE AXLE TRUCKS"	30"	24"		REMAIN										ON GM STRUCTURE
	CP-04	5		1	SR52 - Del. Ave. KEEP RIGHT	48"	96"		REMAIN										ON OH STRUCTURE
1514	CP-05	1A	M3-3(24)	1	CARDINAL DIRECTION - SOUTH - 24x12	24"	12"		REMAIN										
1472	CP-05	1B	M1-1(24)	1	INTERSTATE ROUTE (2 - Digit Sign) - 24x24	24"	24"		REMAIN										I-95
1638	CP-05	1C	M6-7_R(21)	1	DIRECTIONAL ARROW AUXILIARY (Up - 45 Right) - 21x15	21"	15"		REMAIN										
1509	CP-05	2A	M3-1(36)	1	CARDINAL DIRECTION - NORTH - 36x18	36"	18"		REMAIN										
1474	CP-05	2B	M1-1(36)	1	INTERSTATE ROUTE (2 - Digit Sign) - 36x36	36"	36"		REMAIN										I-95
1620	CP-05	2C	M6-3(30)	1	DIRECTIONAL ARROW (Up) - 30x21	30"	21"		REMAIN										
	CP-05	3A		1	SR 4 - M.L. King Jr. Blvd (Left)	240"	144"	240.0	NEW										SC1209a (20'x12')
	CP-05	3B		1	TRUCK ROUTE TO 4 (Left)	66"	108"	49.5	NEW										SC1209b (5.5"x9')
	CP-05	4		1	EAST TO - M.L. King Jr. Blvd	198"	126"		REMOVE										ON OH STRUCTURE
691	CP-05	5	SR1-12-DE	1	NO LITTERING UP TO $500 FINE	24"	12"		REMAIN										
423	CP-05	6	R7-4-DE(12)	1	NO STOPPING, STANDING, OR PARKING - 12x18	12"	18"		REMAIN										
1515	CP-05	7A	M3-3(36)	1	CARDINAL DIRECTION - SOUTH - 36x18	36"	18"		REMAIN										
1474	CP-05	7B	M1-1(36)	1	INTERSTATE ROUTE (2 - Digit Sign) - 36x36	36"	36"		REMAIN										I-95
1607	CP-05	7C	M6-1_L(30)	1	DIRECTIONAL ARROW (Left) - 30x21	30"	21"		REMAIN										
1518	CP-05	8A	M3-4(36)	1	CARDINAL DIRECTION - WEST - 36x18	36"	18"		REMAIN										
1490	CP-05	8B	M1-5(36)	1	STATE ROUTE (2 - Digit Sign) - 36x36	36"	36"		REMAIN										SR 48
1606	CP-05	8C	M6-1_R(30)	1	DIRECTIONAL ARROW (Right) - 30x21	30"	21"		REMAIN										
					PAGE TOTALS			966		0	0		0	0		0	0	0	

UNOFFICIAL WEBSITE COPY

ADDENDA / REVISIONS

NOT TO SCALE

CANTILEVER AND OVERHEAD SIGN STRUCTURES, I-95

CONTRACT	BRIDGE NO.	N/A
T201907002	DESIGNED BY: AMP	
COUNTY		
NEW CASTLE	CHECKED BY: JWS	

SIGN SCHEDULE

SS-07
SECTION
TY
SHEET NO.
52

8/13/2019
T:\Dover\Projects\425025.14\600_CADD\05_Official\SS07.dgn

PERMANENT SIGN SCHEDULE

NO.	SHEET NO.	PLAN IDENTIFIER	CODE	QTY.	DESCRIPTION	SIGN WIDTH (IN)	SIGN HEIGHT (IN)	SIGN AREA (SF)	ITEM 819018 SINGLE POST (EACH)			ITEM 819019 INSTALLATION OR REMOVAL OF TRAFFIC SIGN(S) ON MULTIPLE SIGN POSTS (SF)			POST INSTALLATION TYPE	Code X11 12' Post (W/ Basepost)	ITEM 819016 4" HOLE, 0-6" (EACH)	ITEM 819017 4" HOLE, >6" (EACH)	REMARKS
									SIGN DISPOSITION	REMOVE	INSTALL	SIGN DISPOSITION	REMOVE	INSTALL					
1518	CP-05	9A	M3-4(36)	1	CARDINAL DIRECTION - WEST - 36x18	36"	18"		REMAIN										
1490	CP-05	9B	M1-5(36)	1	STATE ROUTE (2 - Digit Sign) - 36x36	36"	36"		REMAIN										SR 48
1588	CP-05	9C	M5-1_R	1	ADVANCE TURN ARROW (Right - 90)	21"	15"		REMAIN										
1824	CP-05	10	D10-2(12)	1	REFERENCE LOCATION (2- Digit) - 12x36	12"	36"		REMAIN										
	CP-05	11		1	Riverfront - NEXT RIGHT	144"	60"		REMAIN										ON OH STRUCTURE
	CP-05	12A		1	"NO STOPPING ANY TIME TOW AWAY"	12"	18"		REMAIN										
	CP-05	12B		1	"SNOW EMERGENCY - NO STOPPING - TOW ZONE"	12"	24"		REMAIN										
	CP-05	13		1	I-95 SOUTH - Del Mem Bridge/Baltimore (Left)	240"	114"		REMAIN										ON OH STRUCTURE
394	CP-06	1A	R6-1_L(36)	1	ONE WAY (ENCLOSED IN LEFT ARROW) - 36x12	36"	12"		REMAIN										
358	CP-06	1B	R5-1(30)	1	DO NOT ENTER - 30x30	30"	30"		REMAIN										
	CP-06	1C	R10-11(18)	1	NO TURN ON RED (Ball) - 18x24	18"	24"		REMAIN										
1472	CP-06	1D	M1-1(24)	1	INTERSTATE ROUTE (2 - Digit Sign) - 24x24	24"	24"		REMAIN										I-95
1604	CP-06	1E	M6-1_R(21)	1	DIRECTIONAL ARROW (Right) - 21x15	21"	15"		REMAIN										
	CP-06	2A	R10-11(18)	1	NO TURN ON RED (Ball) - 18x24	18"	24"		REMAIN										
110	CP-06	2B	R3-2(24)	1	LEFT TURN PROHIBITION (Symbol) - 24x24	24"	24"		REMAIN										
1472	CP-06	2C	M1-1(24)	1	INTERSTATE ROUTE (2 - Digit Sign) - 24x24	24"	24"		REMAIN										I-95
1604	CP-06	2D	M6-1_R(21)	1	DIRECTIONAL ARROW (Right) - 21x15	21"	15"		REMAIN										
358	CP-06	2E	R5-1(30)	1	DO NOT ENTER - 30x30	30"	30"		REMAIN										
362	CP-06	3	R5-1a(36)	1	WRONG WAY - 36x24	36"	24"		REMAIN										
906	CP-06	4A	W4-2_R(36)	1	LANE ENDS (Right) - 36x36	36"	36"		REMAIN										
	CP-06	4B		1	"BEYOND SIGNAL"	24"	18"		REMAIN										
	CP-06	5		1	I-95 SOUTH - Newark/Baltimore - LEFT LANE	156"	132"		REMOVE										ON OH STRUCTURE
	CP-06	6		1	I-95 NORTH - Chester/Philadelphia	156"	132"		REMOVE										ON OH STRUCTURE
1534	CP-06	7A	M4-5(24)	1	TO - 24x12	24"	12"		REMAIN										
1472	CP-06	7B	M1-1(24)	1	INTERSTATE ROUTE (2 - Digit Sign) - 24x24	24"	24"		REMAIN										
	CP-06	7C		1	U-TURN SYMBOL	36"	36"		REMAIN										
1534	CP-06	8A	M4-5(24)	1	TO - 24x12	24"	12"		REMAIN										
1472	CP-06	8B	M1-1(24)	1	INTERSTATE ROUTE (2 - Digit Sign) - 24x24	24"	24"		REMAIN										
1592	CP-06	8C	M5-2_R	1	ADVANCE TURN ARROW (Right - 45)	21"	15"		REMAIN										
	CP-06	9		1	I-95 SOUTH - Baltimore	156"	120"	130.0	NEW										SO1194a (13'x10')
	CP-06	10		1	I-95 NORTH - Philadelphia	192"	120"	160.0	NEW										SO1194b (16'x10')
	CP-07	1		1	I-95 NORTH - Concord Pike/Marsh Rd	270"	108"		REMOVE										ON OH STRUCTURE
	CP-07	2A		1	EXIT 7	90"	30"		REMOVE										ON OH STRUCTURE
	CP-07	2B		1	SR 52 - Delaware Ave - RIGHT LANE MUST EXIT	198"	108"		REMOVE										ON OH STRUCTURE
1472	CP-07	3A	M1-1(24)	1	INTERSTATE ROUTE (2 - Digit Sign) - 24x24	24"	24"		REMAIN										I-95
1619	CP-07	3B	M6-3(21)	1	DIRECTIONAL ARROW (Up) - 21x15	21"	15"		REMAIN										
	CP-07	3C		1	"PARKING AUTHORIZED NON-PROFIT STAFF ONLY"	12"	24"		REMAIN										
	CP-07	4		1	SR 4 - King Blvd (Straight)	132"	156"		REMOVE										ON OH STRUCTURE
396	CP-07	5A	R6-2_R(18)	1	ONE WAY (RIGHT ARROW) - 18x24	18"	24"		REMAIN										
401	CP-07	5B	R6-2_L(18)	1	ONE WAY (LEFT ARROW) - 18x24	18"	24"		REMAIN										
418	CP-07	5C	R7-1	1	NO PARKING ANY TIME	12"	18"		REMAIN										
358	CP-07	6	R5-1(30)	1	DO NOT ENTER - 30x30	30"	30"		REMAIN										
	CP-07	7A	R10-11(18)	1	NO TURN ON RED (Ball) - 18x24	18"	24"		REMAIN										
	CP-07	7B		1	"NOTICE: LOITERING FOR THE PURPOSE OF PANHANDLING.."	24"	30"		REMAIN										
	CP-07	7C		1	"HAND HELD USE OF A CELL PHONE IS PROHIBITED WHILE.."	18"	24"		REMAIN										
1824	CP-07	8	D10-2(12)	1	REFERENCE LOCATION (2- Digit) - 12x36	12"	36"		REMAIN										
	CP-07	9		1	"WILMINGTON HOSP" (Right)	60"	30"					REMAIN							
1472	CP-07	10A	M1-1(24)	1	INTERSTATE ROUTE (2 - Digit Sign) - 24x24	24"	24"		REMAIN										I-95
1618	CP-07	10B	M6-3(B)	1	DIRECTIONAL ARROW (Up) - 12x9	12"	9"		REMAIN										
	CP-07	10C		1	"NO PARKING/TUES 8AM-10AM/STREET CLEANING"	12"	18"		REMAIN										
1509	CP-07	11A	M3-1(36)	1	CARDINAL DIRECTION - NORTH - 36x18	36"	18"		REMAIN										
1472	CP-07	11B	M1-1(24)	1	INTERSTATE ROUTE (2 - Digit Sign) - 24x24	24"	24"		REMAIN										I-95
1619	CP-07	11C	M6-3(21)	1	DIRECTIONAL ARROW (Up) - 21x15	21"	15"		REMAIN										
1508	CP-07	12A	M3-1(24)	1	CARDINAL DIRECTION - NORTH - 24x12	24"	12"		REMAIN										
1472	CP-07	12B	M1-1(24)	1	INTERSTATE ROUTE (2 - Digit Sign) - 24x24	24"	24"		REMAIN										I-95
1605	CP-07	12C	M6-1_L(21)	1	DIRECTIONAL ARROW (Left) - 21x15	21"	15"		REMAIN										
418	CP-07	12D	R7-1	1	NO PARKING ANY TIME	12"	18"		REMAIN										
1694	CP-07	12E	D4-3-DE	1	BUS STOP (DART)	12"	18"		REMAIN										
1514	CP-07	13A	M3-3(24)	1	CARDINAL DIRECTION - SOUTH - 24x12	24"	12"		REMAIN										
1472	CP-07	13B	M1-1(24)	1	INTERSTATE ROUTE (2 - Digit Sign) - 24x24	24"	24"		REMAIN										I-95
1589	CP-07	13C	M5-1_L	1	ADVANCE TURN ARROW (Left - 90)	21"	15"		REMAIN										
418	CP-07	13D	R7-1	1	NO PARKING ANY TIME	12"	18"		REMAIN										
1508	CP-07	14A	M3-1(24)	1	CARDINAL DIRECTION - NORTH - 24x12	24"	12"		REMAIN										
1472	CP-07	14B	M1-1(24)	1	INTERSTATE ROUTE (2 - Digit Sign) - 24x24	24"	24"		REMAIN										I-95
	CP-07	15A		1	EXIT 7	114"	30"	23.8	NEW										SC1032a (9.5'x2.5')
	CP-07	15B		1	SR 52 - Delaware Ave - EXIT ONLY	252"	144"	252.0	NEW										SC1032a (21'x12')
	CP-07	16		1	EXIT 7B HOSPITAL	48"	84"	28.0	NEW										SC1032b (4'x7')
68	CP-08	1	R2-1-55(48)	1	SPEED LIMIT (55 MPH - 48x60)	48"	60"		REMAIN										
					PAGE TOTALS			594		0	0		0	0		0	0	0	

UNOFFICIAL WEBSITE COPY

ADDENDA / REVISIONS

NOT TO SCALE

CANTILEVER AND OVERHEAD SIGN STRUCTURES, I-95

CONTRACT	BRIDGE NO.	N/A
T201907002	DESIGNED BY: AMP	
COUNTY		
NEW CASTLE	CHECKED BY: JWS	

SIGN SCHEDULE

SS-08

SECTION TY

SHEET NO. 53

8/13/2019
T:\Dover\Projects\425025,14,600_CADD\05_Official\SS08.dgn

PERMANENT SIGN SCHEDULE

NO.	SHEET NO.	PLAN IDENTIFIER	CODE	QTY.	DESCRIPTION	SIGN WIDTH (IN)	SIGN HEIGHT (IN)	SIGN AREA (SF)	ITEM 819018 SINGLE POST (EACH)			ITEM 819019 INSTALLATION OR REMOVAL OF TRAFFIC SIGN(S) ON MULTIPLE SIGN POSTS (SF)			POST INSTALLATION TYPE	Code X11 12' Post (W/ Basepost)	ITEM 819016 4" HOLE, 0-6" (EACH)	ITEM 819017 4" HOLE, >6" (EACH)	REMARKS
									SIGN DISPOSITION	REMOVE	INSTALL	SIGN DISPOSITION	REMOVE	INSTALL					
362	CP-08	2	R5-1a(36)	1	WRONG WAY - 36x24	36"	24"		REMAIN										
362	CP-08	3	R5-1a(36)	1	WRONG WAY - 36x24	36"	24"		REMAIN										
1504	CP-08	4A	M2-1(21)	1	JUNCTION - 21x15	21"	15"		REMAIN										
1488	CP-08	4B	M1-5(24)	1	STATE ROUTE (2 - Digit Sign) - 24x24	24"	24"		REMAIN										SR 9
	CP-08	4C		1	AMTRAK	24"	18"		REMAIN										
	CP-08	4D		1	SEPTA	24"	18"		REMAIN										
	CP-08	4E		1	DIRECTIONAL ARROW (Up) - 24x12	24"	12"		REMAIN										
	CP-08	5		1	SR 9 SOUTH - 4th St (Left) - ONLY	126"	114"		REMAIN										ON OH STRUCTURE
	CP-08	6		1	M.L. King Jr. Blvd	216"	114"		REMAIN										ON OH STRUCTURE
	CP-08	7		1	SR 9 NORTH - 4th St (Right) - NO RIGHT ON RED	144"	114"		REMAIN										ON OH STRUCTURE
	CP-08	8		1	"FRAWLEY STADIUM"	30"	30"		REMAIN										
	CP-08	9		1	"WILMINGTON WELCOME"	72"	66"					REMAIN							
877	CP-08	10	W3-3(30)	1	SIGNAL AHEAD (Symbol) - 30x30	30"	30"		REMAIN										
1305	CP-08	11	W13-3(48)	1	ADVISORY RAMP SPEED - 48x60	48"	60"					REMAIN							25 MPH
	CP-08	12		1	"JUNCTION I-295 - 2 1/2 MILES"	144"	102"		REMOVE										ON OH STRUCTURE
	CP-08	13A		1	EXIT 6	90"	30"		REMOVE										ON OH STRUCTURE
	CP-08	13B		1	M.L. King Jr. Blvd - Fourth St	240"	108"		REMOVE										ON OH STRUCTURE
1882	CP-08	14	E5-1a(78)	1	EXIT GORE (1-, 2- Digit Exit Number)	54"	60"					REMAIN							EXIT 6
1531	CP-08	15A	M4-4(24)	1	TRUCK - 24x12	24"	12"		REMAIN										
110	CP-08	15B	R3-2(24)	1	LEFT TURN PROHIBITION (Symbol) - 24x24	24"	24"		REMAIN										
1488	CP-08	16A	M1-5(24)	1	STATE ROUTE (2 - Digit Sign) - 24x24	24"	24"		REMAIN										SR 52
1638	CP-08	16B	M6-7_R(21)	1	DIRECTIONAL ARROW AUXILIARY (Up - 45 Right) - 21x15	21"	15"		REMAIN										
	CP-08	17A		1	EXIT 7	114"	30"	23.8	NEW										SC1034 (9.5'x2.5')
	CP-08	17B		1	SR 52 - Delaware Ave - EXIT ONLY (Right)	252"	144"	252.0	NEW										SC1034 (21'x12')
	CP-08	18A		1	EXIT 7	90"	30"		REMOVE										ON OH STRUCTURE
	CP-08	18B		1	SR 52 - Delaware Ave - MUST EXIT	198"	126"		REMOVE										ON OH STRUCTURE
	CP-09	1A		1	EXIT 6	90"	30"		REMOVE										ON OH STRUCTURE
	CP-09	1B		1	M.L. King Jr. Blvd/Fourth St - MUST EXIT	240"	150"		REMOVE										ON OH STRUCTURE
	CP-09	2A		1	EXIT 6	114"	30"	23.8	NEW										SC1035 (9.5'x2.5')
	CP-09	2B		1	SR 9 - Fourth St/M.L. King Jr. Blvd - EXIT ONLY (Right)	318"	180"	397.5	NEW										SC1035 (26.5'x15')
1472	CP-09	3A	M1-1(24)	1	INTERSTATE ROUTE (2 - Digit Sign) - 24x24	24"	24"		REMAIN										I-95
1619	CP-09	3B	M6-3(21)	1	DIRECTIONAL ARROW (Up) - 21x15	21"	15"		REMAIN										
	CP-09	3C		1	"NO/STOPPING/ANY/TIME"	12"	18"		REMAIN										
1514	CP-09	4A	M3-3(24)	1	CARDINAL DIRECTION - SOUTH - 24x12	24"	12"		REMAIN										
1472	CP-09	4B	M1-1(24)	1	INTERSTATE ROUTE (2 - Digit Sign) - 24x24	24"	24"		REMAIN										I-95
1605	CP-09	4C	M6-1_L(21)	1	DIRECTIONAL ARROW (Left) - 21x15	21"	15"		REMAIN										
	CP-09	5A		1	EXIT 6	90"	30"		REMOVE										ON OH STRUCTURE
	CP-09	5B		1	M.L. King Jr. Blvd/Fourth St - MUST EXIT	240"	150"		REMOVE										ON OH STRUCTURE
1514	CP-09	6A	M3-3(24)	1	CARDINAL DIRECTION - SOUTH - 24x12	24"	12"		REMAIN										
1472	CP-09	6B	M1-1(24)	1	INTERSTATE ROUTE (2 - Digit Sign) - 24x24	24"	24"		REMAIN										I-95
1619	CP-09	6C	M6-3(21)	1	DIRECTIONAL ARROW (Up) - 21x15	21"	15"		REMAIN										
1753	CP-09	7A	D9-2(24)	1	HOSPITAL (Symbol) - 24x24	24"	24"		REMAIN										
1638	CP-09	7B	M6-7_R(21)	1	DIRECTIONAL ARROW AUXILIARY (Up - 45 Right) - 21x15	21"	15"		REMAIN										
	CP-09	8A		1	EXIT 7	90"	30"		REMOVE										ON OH STRUCTURE
	CP-09	8B		1	SR 52 - Delaware Ave - MUST EXIT	138"	126"		REMOVE										ON OH STRUCTURE
1882	CP-09	9	E5-1a(78)	1	EXIT GORE (1-, 2- Digit Exit Number)	54"	60"					REMAIN							EXIT 7
	CP-09	10A		1	EXIT 8	90"	30"		REMOVE										ON OH STRUCTURE
	CP-09	10B		1	US 202 - Concord Pike - 1 MILE	138"	108"		REMOVE										ON OH STRUCTURE
	CP-09	11A		1	EXIT 7	90"	30"		REMOVE										ON OH STRUCTURE
	CP-09	11B		1	SR 52 - Delaware Ave	138"	90"		REMOVE										ON OH STRUCTURE
	CP-10	1		1	I-95 SOUTH - I-295 Junction/Newport/Christiana	276"	168"		REMOVE										ON OH STRUCTURE
	CP-10	2A		1	EXIT 6	90"	30"		REMOVE										ON OH STRUCTURE
	CP-10	2B		1	M.L. King Jr. Blvd/Fourth St - RIGHT LANE MUST EXIT	240"	156"		REMOVE										ON OH STRUCTURE
	CP-10	3A		1	EXIT 6	114"	30"	23.8	NEW										SC1037 (9.5'x2.5')
	CP-10	3B		1	SR 9 - Fourth St/M.L. King Jr. Blvd - EXIT ONLY	318"	180"	397.5	NEW										SC1037 (26.5'x15')
	CP-10	4		1	I-95 NORTH - Philadelphia - NEXT LEFT	240"	156"					REMAIN							
	CP-10	5A		1	EXIT 8	114"	30"	23.8	NEW										SC1036 (9.5'x2.5')
	CP-10	5B		1	US 202 Concord Pike - West Chester/Wilmington - 1 MILE	252"	180"	315.0	NEW										SC1036 (21'x15')
1508	CP-10	6A	M3-1(24)	1	CARDINAL DIRECTION - NORTH - 24x12	24"	12"		REMAIN										
1472	CP-10	6B	M1-1(24)	1	INTERSTATE ROUTE (2 - Digit Sign) - 24x24	24"	24"		REMAIN										I-95
1605	CP-10	6C	M6-1_L(21)	1	DIRECTIONAL ARROW (Left) - 21x15	21"	15"		REMAIN										
358	CP-10	7	R5-1(30)	2	DO NOT ENTER - 30x30	30"	30"		REMAIN										
401	CP-10	8	R6-2_L(18)	1	ONE WAY (LEFT ARROW) - 18x24	18"	24"		REMAIN										
1999	CP-10	9	S5-2(24)	1	END SCHOOL ZONE - 24x30	24"	30"		REMAIN										
	CP-10	10		1	I-95 NORTH - Chester/Philadelphia (Left)	186"	144"		REMOVE										ON OH STRUCTURE
	CP-10	11		1	"Livable Delaware"	30"	24"		REMAIN										
	CP-10	12		1	"WILMINGTON WELCOME"	72"	66"					REMAIN							
362	CP-10	13	R5-1a(36)	1	WRONG WAY - 36x24	36"	24"		REMAIN										
					PAGE TOTALS			1457		0	0		0	0		0	0	0	

UNOFFICIAL WEBSITE COPY

ADDENDA / REVISIONS

NOT TO SCALE

CANTILEVER AND OVERHEAD SIGN STRUCTURES, I-95

CONTRACT	BRIDGE NO.	N/A
T201907002	DESIGNED BY: AMP	
COUNTY		
NEW CASTLE	CHECKED BY: JWS	

SIGN SCHEDULE

SS-09

SECTION TY

SHEET NO. 54

8/13/2019
T:\Dover\Projects\425025.14\600_CADD\05_Official\SS09.dgn

PERMANENT SIGN SCHEDULE

NO.	SHEET NO.	PLAN IDENTIFIER	CODE	QTY.	DESCRIPTION	SIGN WIDTH (IN)	SIGN HEIGHT (IN)	SIGN AREA (SF)	ITEM 819018 SINGLE POST (EACH)			ITEM 819019 INSTALLATION OR REMOVAL OF TRAFFIC SIGN(S) ON MULTIPLE SIGN POSTS (SF)			POST INSTALLATION TYPE	Code X11 12' Post (W/ Basepost)	ITEM 819016 4" HOLE, 0-6" (EACH)	ITEM 819017 4" HOLE, >6" (EACH)	REMARKS
									SIGN DISPOSITION	REMOVE	INSTALL	SIGN DISPOSITION	REMOVE	INSTALL					
362	CP-10	14	R5-1a(36)	1	WRONG WAY - 36x24	36"	24"		REMAIN										
394	CP-10	15A	R6-1_L(36)	1	ONE WAY (ENCLOSED IN LEFT ARROW) - 36x12	36"	12"		REMAIN										
392	CP-10	15B	R6-1_R(36)	1	ONE WAY (ENCLOSED IN RIGHT ARROW) - 36x12	36"	12"		REMAIN										
358	CP-10	15C	R5-1(30)	1	DO NOT ENTER - 30x30	30"	30"		REMAIN										
396	CP-10	16	R6-2_R(18)	1	ONE WAY (RIGHT ARROW) - 18x24	18"	24"		REMAIN										
	CP-10	17		1	"NOTICE: LOITERING FOR THE PURPOSE OF PANHANDLING.."	24"	30"		REMAIN										
	CP-10	18		1	I-95 NORTH - Philadelphia	192"	120"	160.0	NEW										SC1229 (16'x10')
1534	CP--11	1A	M4-5(24)	1	TO - 24x12	24"	12"		REMAIN										
1514	CP--11	1B	M3-3(24)	1	CARDINAL DIRECTION - SOUTH - 24x12	24"	12"		REMAIN										
1472	CP--11	1C	M1-1(24)	1	INTERSTATE ROUTE (2 - Digit Sign) - 24x24	24"	24"		REMAIN										I-95
1605	CP--11	1D	M6-1_L(21)	1	DIRECTIONAL ARROW (Left) - 21x15	21"	15"		REMAIN										
402	CP--11	1E	R6-2_L(24)	1	ONE WAY (LEFT ARROW) - 24x30	24"	30"		REMAIN										
901	CP--11	2	W4-1_R(48)	1	MERGE (Right) - 48x48	48"	48"					REMAIN							
	CP--11	3		1	"DANIEL S FRAWLEY STADIUM"	54"	48"					REMAIN							
1508	CP--11	4A	M3-1(24)	1	CARDINAL DIRECTION - NORTH - 24x12	24"	12"		REMAIN										
1472	CP--11	4B	M1-1(24)	1	INTERSTATE ROUTE (2 - Digit Sign) - 24x24	24"	24"		REMAIN										I-95
1619	CP--11	4C	M6-3(21)	1	DIRECTIONAL ARROW (Up) - 21x15	21"	15"		REMAIN										
	CP-11	5		1	I-95 NORTH - Philadelphia (Straight)	240"	156'		REMAIN										
1765	CP-11	6A	D9-7(30)	1	GAS (Symbol) - 30x30	30"	30"		REMAIN										
	CP-11	6B	M6-7_R(24)	1	DIRECTIONAL ARROW AUXILLARY (Up - Right 45) - 24x18	24"	18"		REMAIN										
1514	CP-11	7A	M3-3(24)	1	CARDINAL DIRECTION - SOUTH - 24x12	24"	12"		REMAIN										
1472	CP-11	7B	M1-1(24)	1	INTERSTATE ROUTE (2 - Digit Sign) - 24x24	24"	24"		REMAIN										I-95
1639	CP-11	7C	M6-7_L(21)	1	DIRECTIONAL ARROW AUXILIARY (Up - 45 Left) - 21x15	21"	15"		REMAIN										
	CP-11	8		1	I-95 NORTH - Philadelphia (Left)	228"	108"	171.0	NEW										SC1196 (19'x9')
691	CP-11	9	SR1-12-DE	1	NO LITTERING UP TO $500 FINE	24"	12"		REMAIN										
878	CP-11	10A	W3-3(48)	1	SIGNAL AHEAD (Symbol) - 48x48	48"	48"		REMAIN										
1672	CP-11	10B	D3-1(8)	1	STREET NAME (1 Line)	18"	8"		REMAIN										ADAMS ST
	CP-11	11		1	"WILMINGTON WELCOME"	72"	66"					REMAIN							
401	CP-11	12	R6-2_L(18)	1	ONE WAY (LEFT ARROW) - 18x24	18"	24"		REMAIN										
	CP-11	13		1		216"	114"		REMOVE										ON OH STRUCTURE
691	CP-11	14A	SR1-12-DE	1	NO LITTERING UP TO $500 FINE	24"	12"		REMAIN										
	CP-11	14B		1	"NO PEDESTRIANS/NO HITCHHIKERS/NO BICYCLES"	36"	30"		REMAIN										
1485	CP-11	15	M1-4(30)	1	US ROUTE (3 - Digit Sign) - 30x24	30"	24"		REMAIN										US 202
110	CP-11	16A	R3-2(24)	1	LEFT TURN PROHIBITION (Symbol) - 24x24	24"	24"		REMAIN										
358	CP-11	16B	R5-1(30)	1	DO NOT ENTER - 30x30	30"	30"		REMAIN										
110	CP-11	17A	R3-2(24)	1	LEFT TURN PROHIBITION (Symbol) - 24x24	24"	24"		REMAIN										
358	CP-11	17B	R5-1(30)	1	DO NOT ENTER - 30x30	30"	30"		REMAIN										
	CP-11	17C	R10-11(18)	1	NO TURN ON RED (Ball) - 18x24	18"	24"		REMAIN										
401	CP-11	17D	R6-2_L(18)	1	ONE WAY (LEFT ARROW) - 18x24	18"	24"		REMAIN										
1514	CP-11	18A	M3-3(24)	1	CARDINAL DIRECTION - SOUTH - 24x12	24"	12"		REMAIN										
1488	CP-11	18B	M1-5(24)	1	STATE ROUTE (2 - Digit Sign) - 24x24	24"	24"		REMAIN										SR 52
1604	CP-11	18C	M6-1_R(21)	1	DIRECTIONAL ARROW (Right) - 21x15	21"	15"		REMAIN										
572	CP-11	18D	R10-11(24)	1	NO TURN ON RED (Ball) - 24x30	24"	30"		REMAIN										
401	CP-11	19	R6-2_L(18)	1	ONE WAY (LEFT ARROW) - 18x24	18"	24"		REMAIN										
901	CP-12	1	W4-1_R(48)	1	MERGE (Right) - 48x48	48"	48"		REMAIN										
1534	CP-12	2A	M4-5(24)	1	TO - 24x12	24"	12"		REMAIN										
1514	CP-12	2B	M3-3(24)	1	CARDINAL DIRECTION - SOUTH - 24x12	24"	12"		REMAIN										
1472	CP-12	2C	M1-1(24)	1	INTERSTATE ROUTE (2 - Digit Sign) - 24x24	24"	24"		REMAIN										I-95
1605	CP-12	2D	M6-1_L(21)	1	DIRECTIONAL ARROW (Left) - 21x15	21"	15"		REMAIN										
	CP-12	3A		1	EXIT 6	90"	30"		REMOVE										ON OH STRUCTURE
	CP-12	3B		1	M.L. King Jr. Blvd/Fourth St - NEXT RIGHT	240"	120"		REMOVE										ON OH STRUCTURE
1508	CP-12	4A	M3-1(24)	1	CARDINAL DIRECTION - NORTH - 24x12	24"	12"		REMAIN										
1488	CP-12	4B	M1-5(24)	1	STATE ROUTE (2 - Digit Sign) - 24x24	24"	24"		REMAIN										SR 52
1605	CP-12	4C	M6-1_L(21)	1	DIRECTIONAL ARROW (Left) - 21x15	21"	15"		REMAIN										
1514	CP-12	5A	M3-3(24)	1	CARDINAL DIRECTION - SOUTH - 24x12	24"	12"		REMAIN										
1488	CP-12	5B	M1-5(24)	1	STATE ROUTE (2 - Digit Sign) - 24x24	24"	24"		REMAIN										SR 52
1588	CP-12	5C	M5-1_R	1	ADVANCE TURN ARROW (Right - 90)	21"	15"		REMAIN										
	CP-12	6		1	Riverfront Attractions - EXIT 6	72"	60"					REMAIN							
	CP-12	7		1	I-95 NORTH - Philadelphia (Right)	216"	84"		REMAIN										
1534	CP-12	8A	M4-5(24)	1	TO - 24x12	24"	12"		REMAIN										
1472	CP-12	8B	M1-1(24)	1	INTERSTATE ROUTE (2 - Digit Sign) - 24x24	24"	24"		REMAIN										I-95
1619	CP-12	8C	M6-3(21)	1	DIRECTIONAL ARROW (Up) - 21x15	21"	15"		REMAIN										
1694	CP-12	8D	D4-3-DE	1	BUS STOP (DART)	12"	18"		REMAIN										
1882	CP-13	1	E5-1a(78)	1	EXIT GORE (1-, 2- Digit Exit Number)	72"	66"					REMAIN							
1302	CP-13	2	W13-2(48)	1	ADVISORY EXIT SPEED - 48x60	72"	24"					REMAIN							
	CP-13	3A		1	EXIT 8	114"	30"		REMAIN										ON OH STRUCTURE
	CP-13	3B		1	US 202 Concord Pike - Wilmington/West Chester (Right)	306"	156"		REMAIN										ON OH STRUCTURE
	CP-13	4		1	"Wilmington EXITS - Concord Pike/Delaware Ave/M.L. King Jr. Blvd"	282"	156"	305.5	NEW										SC1038 (23.5'x13')
	CP-13	5		1	"Wilmington - EXITS 8-7-6"	144"	60"					REMOVE							GM STRUCTURE
					PAGE TOTALS			637		0	0		0	0		0	0	0	
					JOB TOTALS			3653		0	0		0	0		0	0	0	

UNOFFICIAL WEBSITE COPY

ADDENDA / REVISIONS

NOT TO SCALE

CANTILEVER AND OVERHEAD SIGN STRUCTURES, I-95

CONTRACT	BRIDGE NO.	N/A
T201907002	DESIGNED BY: AMP	
COUNTY		
NEW CASTLE	CHECKED BY: JWS	

SIGN SCHEDULE

SS-10

SECTION TY

SHEET NO. 55

SIGN STRUCTURE NOTES

DESIGN SPECIFICATIONS

1. AASHTO "LRFD STANDARD SPECIFICATIONS FOR STRUCTURAL SUPPORTS FOR HIGHWAY SIGNS, LUMINAIRES, AND TRAFFIC SIGNALS", 2015, 1ST EDITION, WITH 2017 INTERIM REVISIONS.
2. AASHTO "LRFD BRIDGE DESIGN SPECIFICATIONS", 2014, 7TH EDITION, WITH 2017 INTERIM REVISIONS.
3. DELAWARE DEPARTMENT OF TRANSPORTATION STANDARD SPECIFICATIONS FOR ROAD AND BRIDGE CONSTRUCTION, AUGUST 2016, INCLUDING ALL SUPPLEMENTALS AND THE CONTRACT SPECIAL PROVISIONS.
4. AWS D1.1 STRUCTURAL WELDING CODE.

DESIGN LOADS

1. THE DESIGN WIND SPEED IS 120 MPH (3-SECOND GUST WIND SPEED), BASED ON A 1700-YEAR MEAN RECURRENCE INTERVAL.
2. THE DESIGN SIGN PANEL WEIGHT IS 3 PSF.
3. THE DESIGN SIGN PANEL AREA INCLUDES AN ADDITIONAL 15% INCREASE IN AREA OVER THE ACTUAL SIGN PANEL AREA.
4. FATIGUE DESIGN FOR CANTILEVER AND OVERHEAD SIGN STRUCTURES IS BASED ON FATIGUE CATEGORY I FOR GALLOPING, NATURAL WINDS GUSTS, AND TRUCK-INDUCED GUSTS.

MATERIALS

1. ALL STRUCTURAL PIPE FOR MASTS AND MAST ARMS SHALL CONFORM TO ASTM A53, GRADE B, TYPE S.
2. ALL STEEL PLATES, SHAPES, AND BACKING RINGS SHALL CONFORM TO AASHTO M270, GRADE 36 OR BETTER.
3. ALL STEEL MEMBERS GREATER THAN OR EQUAL TO ½" THICK, SHALL MEET THE CHARPY V-NOTCH REQUIREMENTS FOR ZONE 2, NON-FRACTURE CRITICAL.
4. THE STRUCTURE SHALL BE GALVANIZED IN ACCORDANCE WITH AASHTO M111.
5. ALL CONNECTION BOLTS (INCLUDING SPLICE BOLTS AND ATTACHMENT BOLTS) SHALL CONFORM TO ASTM A325. WASHERS SHALL CONFORM TO ASTM F436, AND NUTS SHALL CONFORM TO ASTM A563, GRADE DH, OR ASTM A194, GRADE 2H.
6. U-BOLTS SHALL CONFORM TO ASTM A449, TYPE 1.
7. ANCHOR BOLTS SHALL CONFORM TO AASHTO M314, GRADE 55, UNLESS OTHERWISE DIRECTED IN THE PLANS. ANCHOR NUTS SHALL CONFORM TO ASTM A563, GRADE DH, OR ASTM A194, GRADE 2H. WASHERS SHALL CONFORM TO ASTM F436.
8. ALL HARDWARE SHALL BE GALVANIZED IN ACCORDANCE WITH AASHTO M232.
9. PORTLAND CEMENT CONCRETE
   -USE PORTLAND CEMENT CONCRETE FOR CAST-IN-PLACE ELEMENTS AS FOLLOWS:
   (f'c = 28-DAY COMPRESSIVE STRENGTH)
   CLASS B - DRILLED SHAFTS, S01031 COLUMN (f'c = 3,000 PSI).
10. ALL EXPOSED EDGES OF CONCRETE SHALL BE CHAMFERED ¾" UNLESS OTHERWISE NOTED.
11. REINFORCING STEEL SHALL CONFORM TO AASHTO M31, GRADE 60 AND BE UNCOATED UNLESS OTHERWISE NOTED.
12. ALL REINFORCING STEEL SHALL HAVE A CLEAR COVER OF 2" UNLESS OTHERWISE NOTED.

GENERAL

1. FORM MASTS FOR SIGN STRUCTURES TO THE RADII SHOWN ON THE PLANS IN ACCORDANCE WITH THE TUBE AND PIPE ASSOCIATION INTERNATIONAL RECOMMENDED STANDARDS FOR INDUCTION BENDING OF PIPE AND TUBE (TPA-IBS-98).
2. STEEL TEMPLATES SHALL BE USED TO SET ANCHOR BOLTS PLUMB WHEN POURING THE FOUNDATION.
3. BASE PLATES SHALL BE IN FULL CONTACT WITH ALL FLAT WASHERS.
4. ALL ANCHOR BOLTS SHALL BE TIGHTENED USING TURN OF NUT METHOD (1/6 TURN AFTER SNUG TIGHT).
5. THREADS OF ANCHOR BOLTS SHALL BE BURRED OFF AT FACE OF NUT AFTER COLUMN IS INSTALLED.
6. LOCK WASHERS WITH FLAT WASHERS SHALL ONLY BE USED FOR "U" BOLT CONNECTIONS, AND NUT SHALL BE TURNED UNTIL THE LOCK WASHER IS FLAT.
7. MAST AND MAST ARM O.D. DIMENSIONS ARE ACTUAL.
8. FIELD VERIFY ALL DIMENSIONS BEFORE ORDERING ANY MATERIALS.
9. FABRICATE ALL SIGN STRUCTURES INTO THE LARGEST PRACTICAL SECTIONS PRIOR TO GALVANIZING. SUBMIT SPLICE LOCATIONS TO THE ENGINEER FOR APPROVAL. DO NOT COMMENCE FABRICATION UNTIL SUCH SPLICE LOCATIONS ARE APPROVED.
10. DO NOT USE GROUT BETWEEN BASE PLATE AND CONCRETE PEDESTAL.
11. SLOPE TOP OF PEDESTAL 4% FROM CENTER TO NEAR EDGES FOR DRAINAGE.
12. PROVIDE DOUBLE NUTS AND WASHERS FOR EACH ANCHOR BOLT.
13. SIGN STRUCTURES SHALL BE FABRICATED SO THAT AFTER ERECTION, THE MASTS AND MAST ARMS SHALL CONFORM TO THE CAMBER DIAGRAMS SHOWN IN THE DRAWINGS. PERMANENT CAMBER EQUAL TO L/1000 HAS BEEN PROVIDED IN ADDITION TO THE DEAD LOAD CAMBER, WHERE L IS EQUAL TO THE SIGN STRUCTURE SPAN LENGTH.
14. FURNISHING AND INSTALLATION OF VERTICAL SUPPORT BEAMS AND SUPPORT CONNECTIONS WILL BE PAID FOR UNDER ITEM 617000 AND 617001.
15. ALL SIGN STRUCTURES SHALL BE SHOP-ASSEMBLED TO ENSURE PROPER FIT OF SPLICE BOLTS IN THE FIELD.

SIGN STRUCTURE LOCATIONS

SIGN STRUCTURE NO.	STRUCTURE TYPE	BASELINE	STATION "A"	OFFSET "A"	STATION "B"	OFFSET "B"
SC1032	TUBULAR ARCH CANTILEVER	I-95	1321+11.95	72.99	-	-
SC1034	TUBULAR ARCH CANTILEVER	I-95	1324+66.34	75.93	-	-
SC1035	TUBULAR ARCH CANTILEVER	RAMP J	900+92.52	26.28	-	-
SC1036	TUBULAR ARCH CANTILEVER	I-95	1336+63.25	64.56	-	-
SC1037	TUBULAR ARCH CANTILEVER	RAMP L	1110+92.38	26.16	-	-
SC1038	TUBULAR ARCH CANTILEVER	SB I-95	*STA. N/A*	*N/A*	-	-
SC1208	TUBULAR ARCH CANTILEVER	2ND STREET	201+61.75	-30.04	-	-
SC1229	TUBULAR ARCH CANTILEVER	I-95	1337+38.83	122.95	-	-
SC1193	TUBULAR ARCH CANTILEVER	RAMP M	1200+88.16	-20.50	-	-
SC1209	TUBULAR ARCH CANTILEVER	N. JACKSON ST.	*STA. N/A*	*N/A*	-	-
S01031	TUBULAR ARCH OVERHEAD	I-95	1285+69.90	-59.71	1285+69.90	60.83
S01194	TUBULAR ARCH OVERHEAD	RAMP H	809+44.00	-33.93	809+44.00	27.71

UNOFFICIAL WEBSITE COPY

ADDENDA / REVISIONS

NOT TO SCALE

CANTILEVER AND OVERHEAD SIGN STRUCTURES, I-95

CONTRACT	BRIDGE NO.	N/A
T201907002	DESIGNED BY: RMB	
COUNTY		
NEW CASTLE	CHECKED BY: JWS	

SIGN STRUCTURE NOTES

PN-02
SECTION
TY
SHEET NO.
56

8/13/2019
T:\Dover\Projects\425025.14\600_CADD\05_Official\PN02.dgn

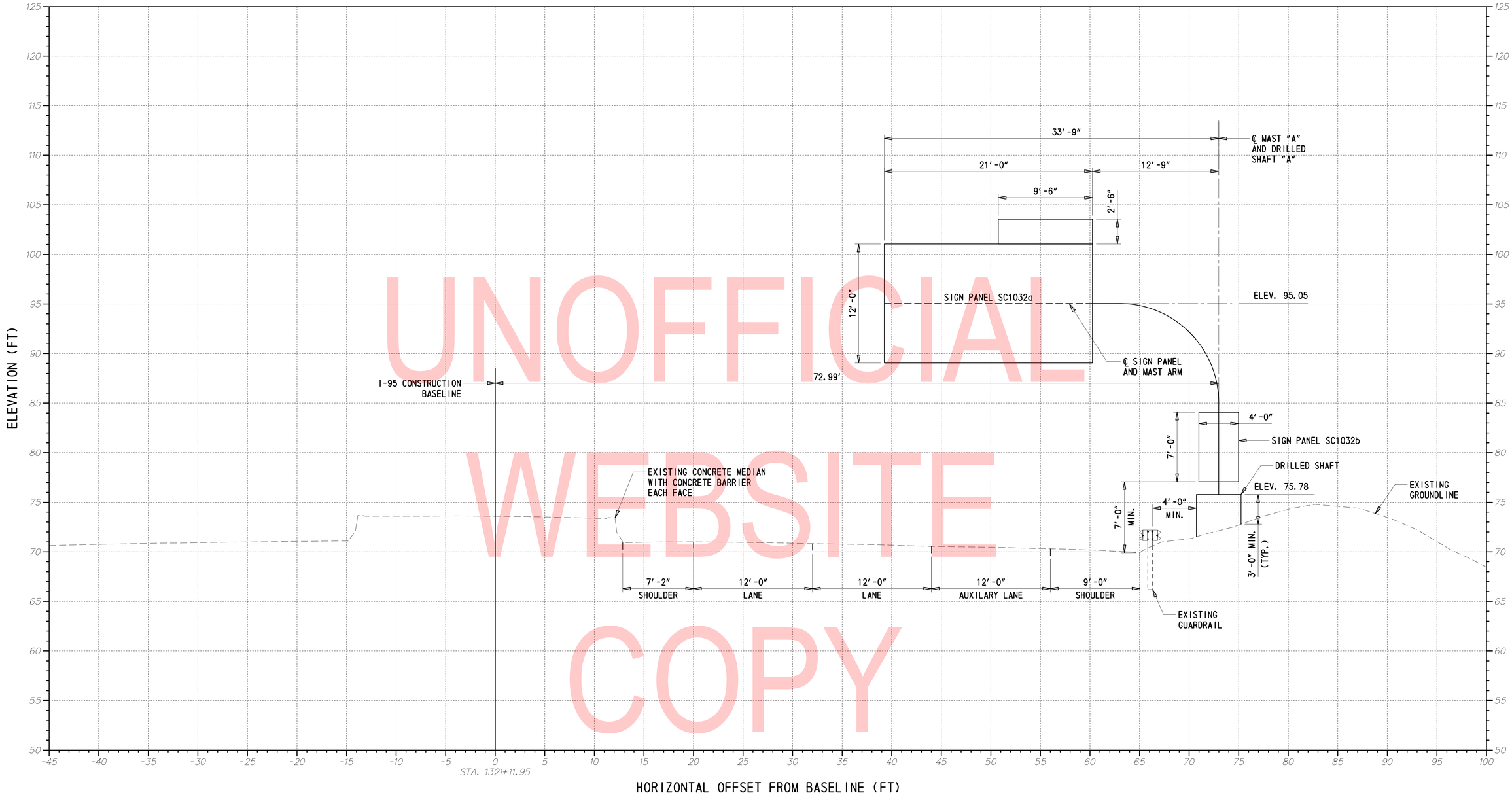

UNOFFICIAL WEBSITE COPY

PROPOSED SIGN STRUCTURE SC1032

STA. 1321+11.95
I-95 CONSTRUCTION BASELINE
(LOOKING STATIONS AHEAD)

NOTE:

1. *CROSS SECTIONS ARE TAKEN NORMAL TO ROADWAY.*
2. *UTILITY LOCATIONS ARE APPROXIMATE. THE ENGINEER SHALL REQUIRE THE CONTRACTOR TO EXCAVATE TEST PITS AT POINTS OF POSSIBLE UTILITY CONFLICTS, TO DETERMINE IF A CONFLICT EXISTS. IF A CONFLICT EXISTS, ANY CONFLICTS SHALL BE COORDINATED BY THE CONTRACTOR, WITH THE ENGINEER AND THE UTILITY COMPANY INVOLVED. THE ENGINEER SHALL ULTIMATELY DETERMINE THE SOLUTION TO THE UTILITY CONFLICT.*

ADDENDA / REVISIONS	SCALE (0 5 10 15 FEET)	CANTILEVER AND OVERHEAD SIGN STRUCTURES, I-95	CONTRACT T201907002	BRIDGE NO. N/A	CROSS SECTION SIGN STRUCTURE SC1032	XS-01
			COUNTY NEW CASTLE	DESIGNED BY: AMP		SECTION TY
				CHECKED BY: JWS		SHEET NO. 57

8/13/2019
T:\Dover\Projects\425025.14\600_CADD\05_Official\XS02_SC1032.dgn

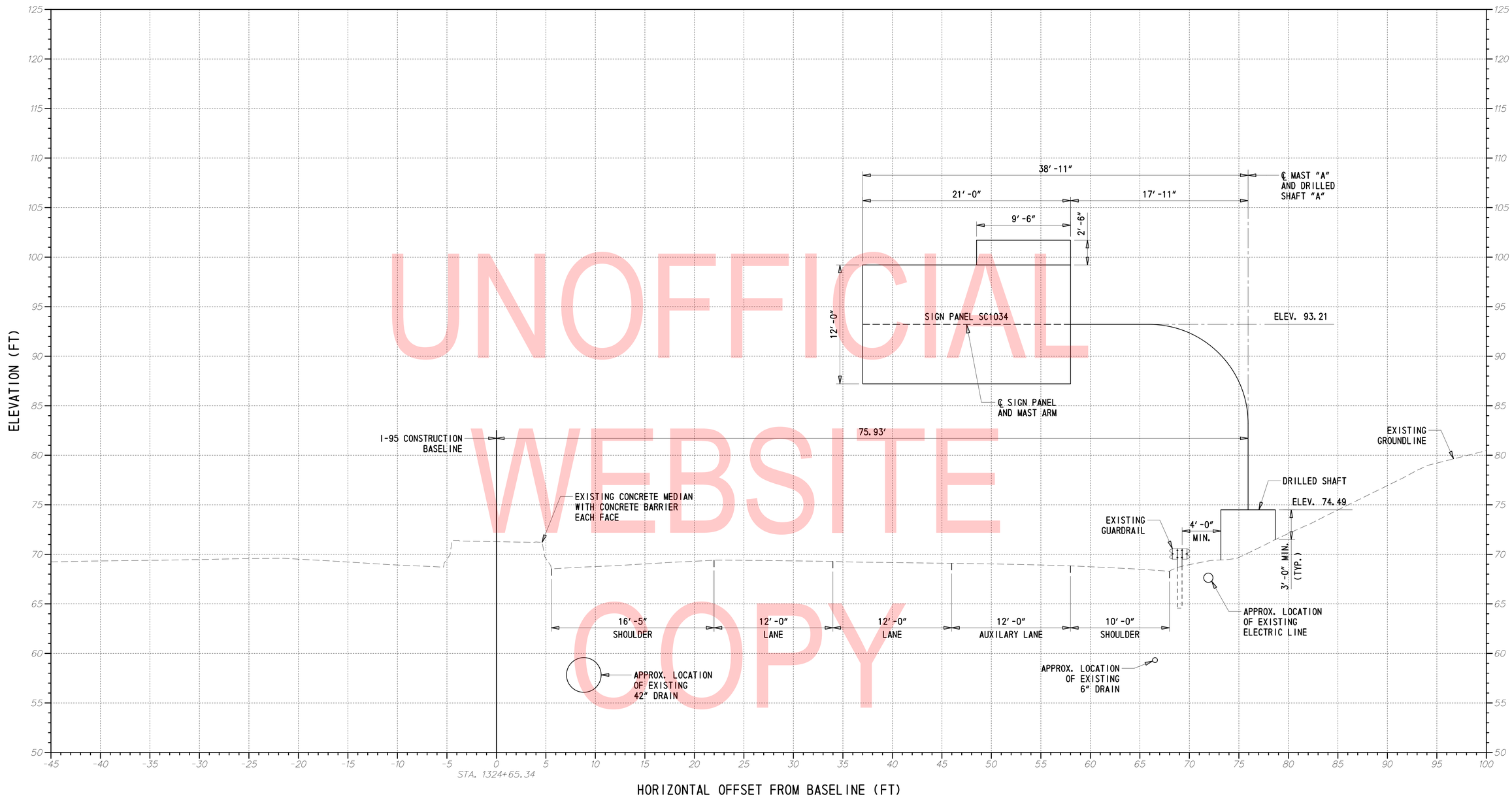

UNOFFICIAL WEBSITE COPY

PROPOSED SIGN STRUCTURE SC1034

STA. 1324+66.34
I-95 CONSTRUCTION BASELINE
(LOOKING STATIONS AHEAD)

NOTE:

1. *CROSS SECTIONS ARE TAKEN NORMAL TO ROADWAY.*
2. *UTILITY LOCATIONS ARE APPROXIMATE. THE ENGINEER SHALL REQUIRE THE CONTRACTOR TO EXCAVATE TEST PITS AT POINTS OF POSSIBLE UTILITY CONFLICTS, TO DETERMINE IF A CONFLICT EXISTS. IF A CONFLICT EXISTS, ANY CONFLICTS SHALL BE COORDINATED BY THE CONTRACTOR, WITH THE ENGINEER AND THE UTILITY COMPANY INVOLVED. THE ENGINEER SHALL ULTIMATELY DETERMINE THE SOLUTION TO THE UTILITY CONFLICT.*

ADDENDA / REVISIONS		SCALE 0 5 10 15 FEET	CANTILEVER AND OVERHEAD SIGN STRUCTURES, I-95	CONTRACT T201907002	BRIDGE NO. N/A	CROSS SECTION SIGN STRUCTURE SC1034	XS-02
				COUNTY NEW CASTLE	DESIGNED BY: AMP		SECTION TY
					CHECKED BY: JWS		SHEET NO. 58

8/13/2019
T:\Dover\Projects\425025.14\600_CADD\05_Official\XS03_SC1034.dgn

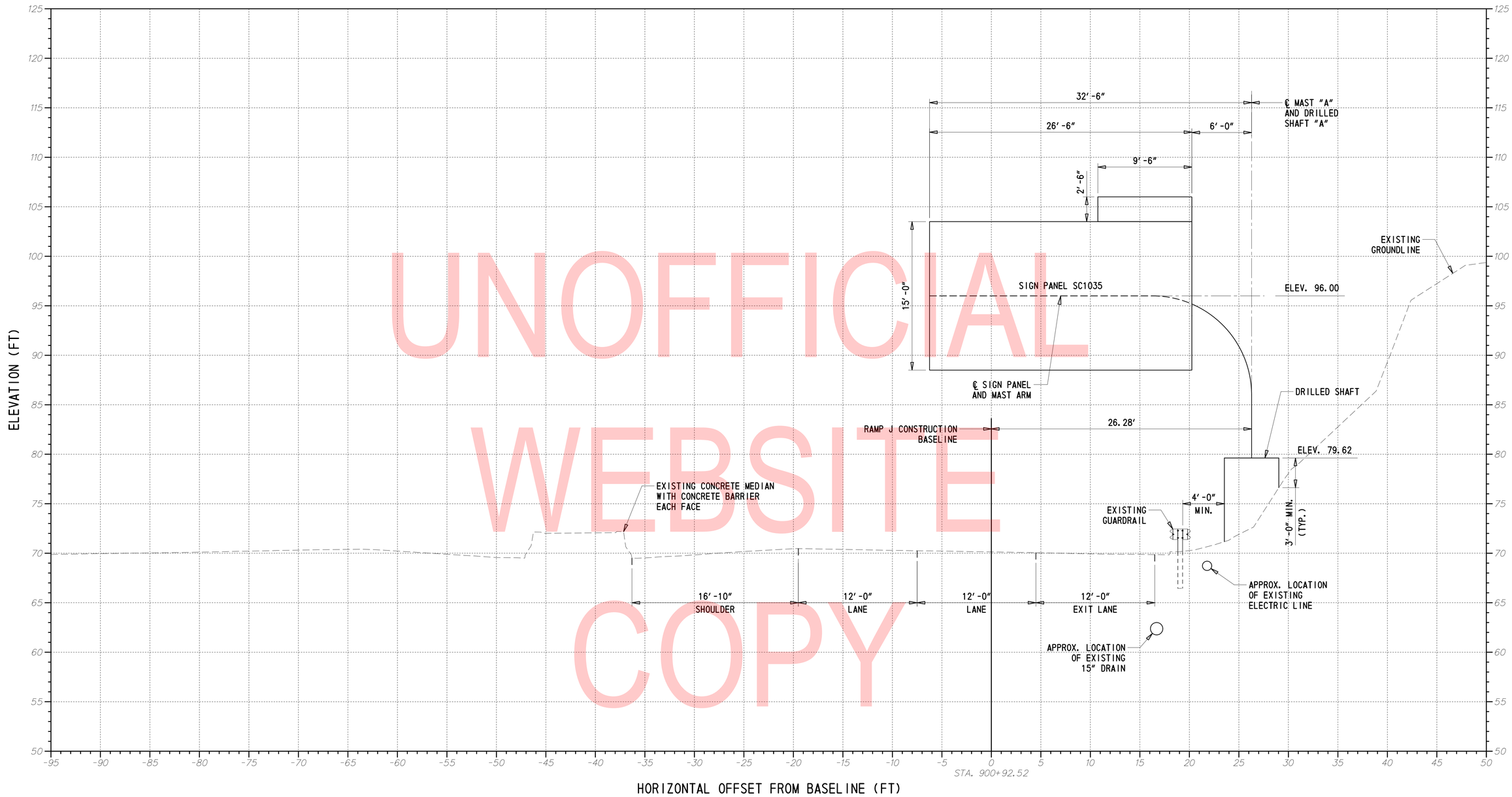

UNOFFICIAL WEBSITE COPY

PROPOSED SIGN STRUCTURE SC1035

STA. 900+92.52
RAMP J CONSTRUCTION BASELINE
(LOOKING STATIONS AHEAD)

NOTE:

1. *CROSS SECTIONS ARE TAKEN NORMAL TO ROADWAY.*
2. *UTILITY LOCATIONS ARE APPROXIMATE. THE ENGINEER SHALL REQUIRE THE CONTRACTOR TO EXCAVATE TEST PITS AT POINTS OF POSSIBLE UTILITY CONFLICTS, TO DETERMINE IF A CONFLICT EXISTS. IF A CONFLICT EXISTS, ANY CONFLICTS SHALL BE COORDINATED BY THE CONTRACTOR, WITH THE ENGINEER AND THE UTILITY COMPANY INVOLVED. THE ENGINEER SHALL ULTIMATELY DETERMINE THE SOLUTION TO THE UTILITY CONFLICT.*

ADDENDA / REVISIONS	

SCALE: 0 5 10 15 FEET

CANTILEVER AND OVERHEAD SIGN STRUCTURES, I-95

CONTRACT	BRIDGE NO.	N/A
T201907002	DESIGNED BY: AMP	
COUNTY		
NEW CASTLE	CHECKED BY: JWS	

CROSS SECTION SIGN STRUCTURE SC1035

XS-03
SECTION
TY
SHEET NO.
59

8/13/2019
T:\Dover\Projects\425025.14\600_CADD\05_Official\XS04_SC1035.dgn

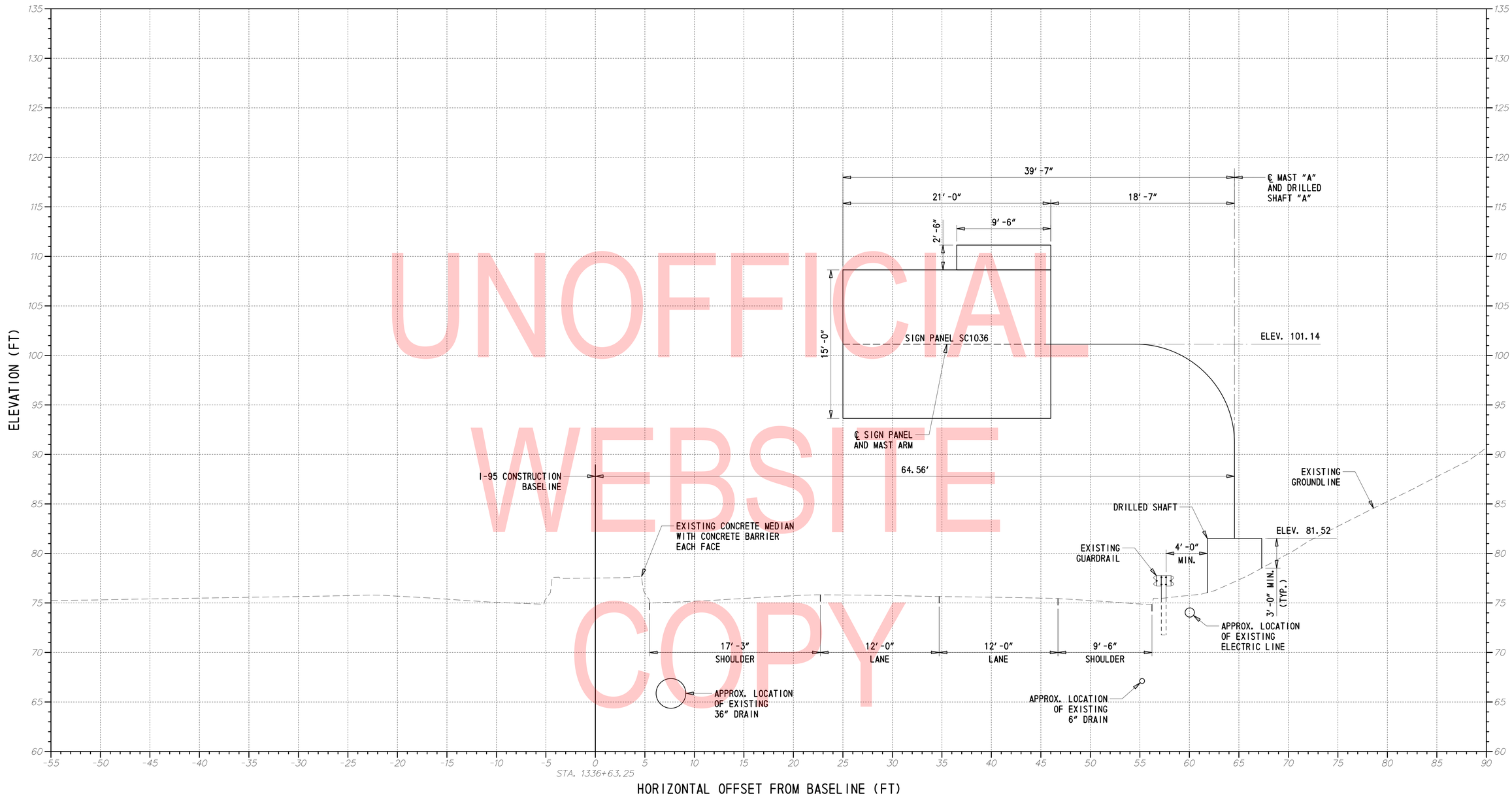

UNOFFICIAL WEBSITE COPY

PROPOSED SIGN STRUCTURE SC1036

STA. 1336+63.25
I-95 CONSTRUCTION BASELINE
(LOOKING STATIONS AHEAD)

NOTE:

1. *CROSS SECTIONS ARE TAKEN NORMAL TO ROADWAY.*
2. *UTILITY LOCATIONS ARE APPROXIMATE. THE ENGINEER SHALL REQUIRE THE CONTRACTOR TO EXCAVATE TEST PITS AT POINTS OF POSSIBLE UTILITY CONFLICTS, TO DETERMINE IF A CONFLICT EXISTS. IF A CONFLICT EXISTS, ANY CONFLICTS SHALL BE COORDINATED BY THE CONTRACTOR, WITH THE ENGINEER AND THE UTILITY COMPANY INVOLVED. THE ENGINEER SHALL ULTIMATELY DETERMINE THE SOLUTION TO THE UTILITY CONFLICT.*

ADDENDA / REVISIONS		SCALE 0 5 10 15 FEET	CANTILEVER AND OVERHEAD SIGN STRUCTURES, I-95	CONTRACT T201907002	BRIDGE NO. N/A	CROSS SECTION SIGN STRUCTURE SC1036	XS-04
				COUNTY NEW CASTLE	DESIGNED BY: AMP		SECTION TY
					CHECKED BY: JWS		SHEET NO. 60

8/13/2019
T:\Dover\Projects\425025.14\600_CADD\05_Official\XS05_SC1036.dgn

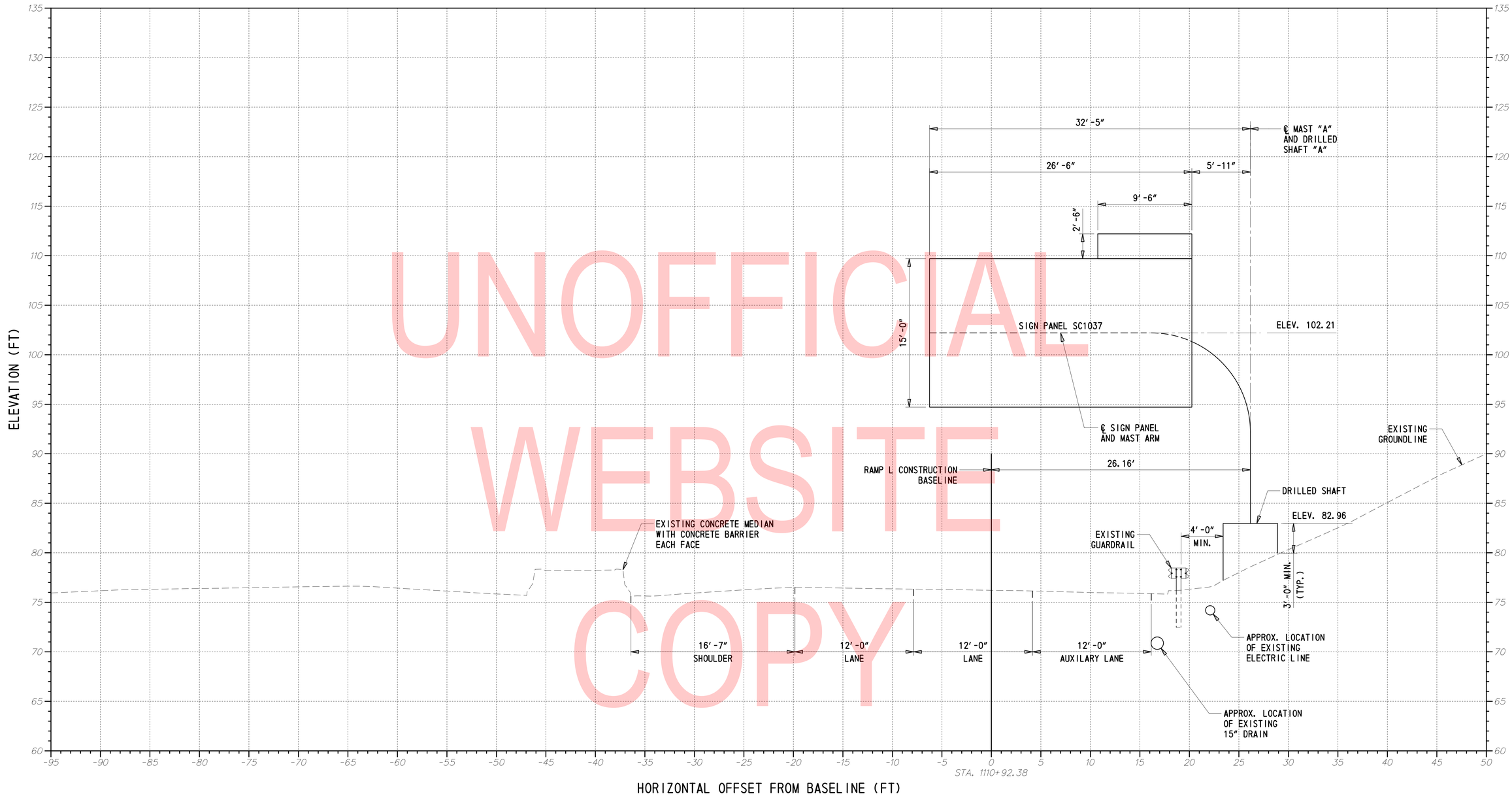

UNOFFICIAL WEBSITE COPY

PROPOSED SIGN STRUCTURE SC1037

STA. 1110+92.38
RAMP L CONSTRUCTION BASELINE
(LOOKING STATIONS AHEAD)

NOTE:

1. *CROSS SECTIONS ARE TAKEN NORMAL TO ROADWAY.*
2. *UTILITY LOCATIONS ARE APPROXIMATE. THE ENGINEER SHALL REQUIRE THE CONTRACTOR TO EXCAVATE TEST PITS AT POINTS OF POSSIBLE UTILITY CONFLICTS, TO DETERMINE IF A CONFLICT EXISTS. IF A CONFLICT EXISTS, ANY CONFLICTS SHALL BE COORDINATED BY THE CONTRACTOR, WITH THE ENGINEER AND THE UTILITY COMPANY INVOLVED. THE ENGINEER SHALL ULTIMATELY DETERMINE THE SOLUTION TO THE UTILITY CONFLICT.*

ADDENDA / REVISIONS	SCALE 0 5 10 15 FEET	CANTILEVER AND OVERHEAD SIGN STRUCTURES, I-95	CONTRACT T201907002	BRIDGE NO. N/A	CROSS SECTION SIGN STRUCTURE SC1037	XS-05 SECTION TY SHEET NO. 61
			COUNTY NEW CASTLE	DESIGNED BY: AMP		
				CHECKED BY: JWS		

8/13/2019
T:\Dover\Projects\425025.14\600_CADD\05_Official\XS06_SC1037.dgn

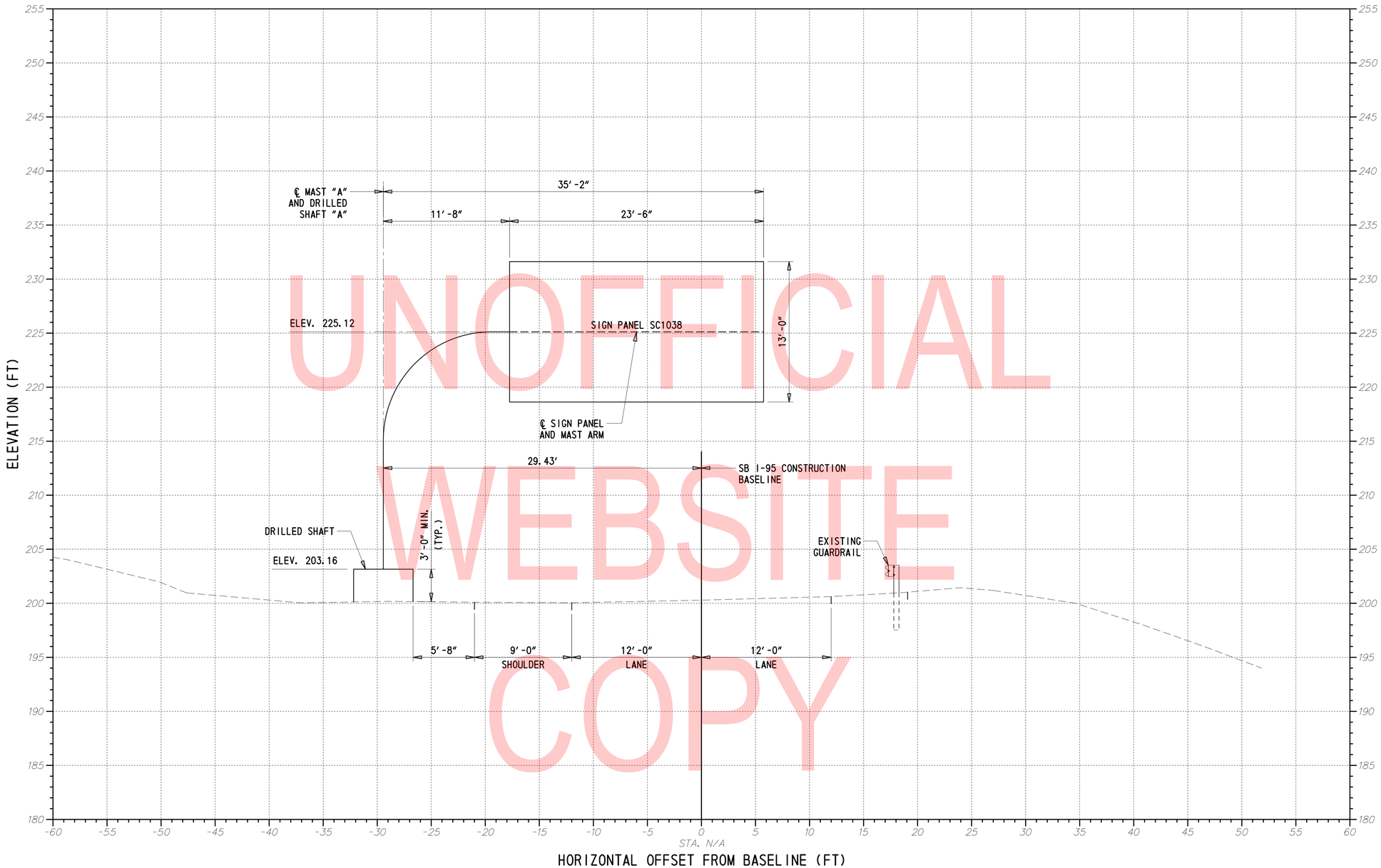

UNOFFICIAL WEBSITE COPY

PROPOSED SIGN STRUCTURE SC1038

STA. N/A
SB I-95 CONSTRUCTION BASELINE
(LOOKING STATIONS AHEAD)

NOTE:

1. *CROSS SECTIONS ARE TAKEN NORMAL TO ROADWAY.*
2. *UTILITY LOCATIONS ARE APPROXIMATE. THE ENGINEER SHALL REQUIRE THE CONTRACTOR TO EXCAVATE TEST PITS AT POINTS OF POSSIBLE UTILITY CONFLICTS, TO DETERMINE IF A CONFLICT EXISTS. IF A CONFLICT EXISTS, ANY CONFLICTS SHALL BE COORDINATED BY THE CONTRACTOR, WITH THE ENGINEER AND THE UTILITY COMPANY INVOLVED. THE ENGINEER SHALL ULTIMATELY DETERMINE THE SOLUTION TO THE UTILITY CONFLICT.*

ADDENDA / REVISIONS	SCALE 0 5 10 15 FEET	CANTILEVER AND OVERHEAD SIGN STRUCTURES, I-95	CONTRACT T201907002	BRIDGE NO. N/A	CROSS SECTION SIGN STRUCTURE SC1038	XS-06
			COUNTY NEW CASTLE	DESIGNED BY: AMP		SECTION TY
				CHECKED BY: JWS		SHEET NO. 62

8/13/2019
T:\Dover\Projects\425025.14\600_CADD\05_Official\XS07_SC1038.dgn

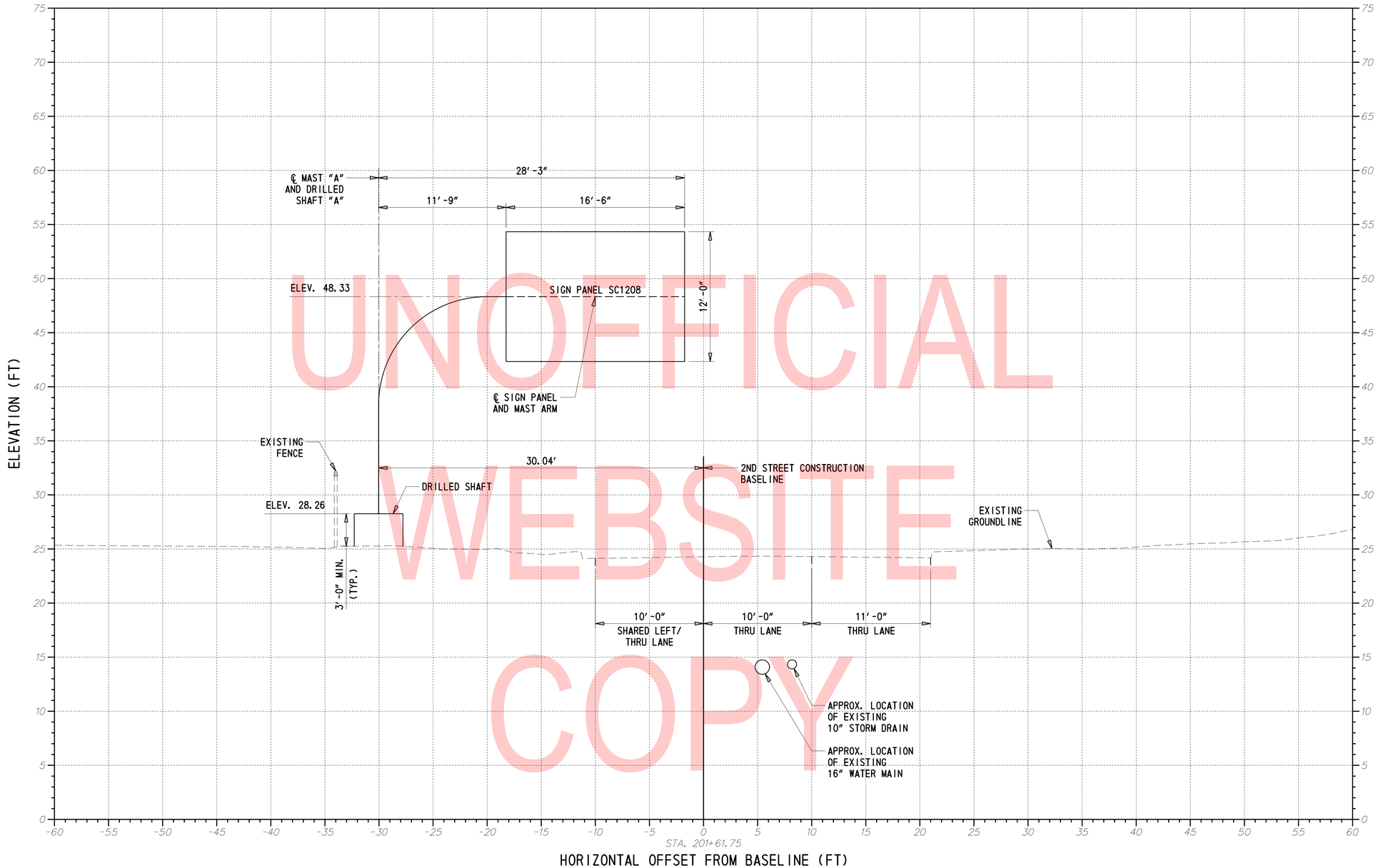

UNOFFICIAL WEBSITE COPY

PROPOSED SIGN STRUCTURE SC1208

STA. 201+61.75
2ND STREET CONSTRUCTION BASELINE
(LOOKING STATIONS AHEAD)

NOTE:

1. *CROSS SECTIONS ARE TAKEN NORMAL TO ROADWAY.*
2. *UTILITY LOCATIONS ARE APPROXIMATE. THE ENGINEER SHALL REQUIRE THE CONTRACTOR TO EXCAVATE TEST PITS AT POINTS OF POSSIBLE UTILITY CONFLICTS, TO DETERMINE IF A CONFLICT EXISTS. IF A CONFLICT EXISTS, ANY CONFLICTS SHALL BE COORDINATED BY THE CONTRACTOR, WITH THE ENGINEER AND THE UTILITY COMPANY INVOLVED. THE ENGINEER SHALL ULTIMATELY DETERMINE THE SOLUTION TO THE UTILITY CONFLICT.*

ADDENDA / REVISIONS	

SCALE: 0 5 10 15 FEET

CANTILEVER AND OVERHEAD SIGN STRUCTURES, I-95

CONTRACT	BRIDGE NO.	N/A
T201907002	DESIGNED BY: AMP	
COUNTY		
NEW CASTLE	CHECKED BY: JWS	

CROSS SECTION SIGN STRUCTURE SC1208

XS-07
SECTION
TY
SHEET NO.
63

8/13/2019
T:\Dover\Projects\425025.14\600_CADD\05_Official\XS08_SC1208.dgn

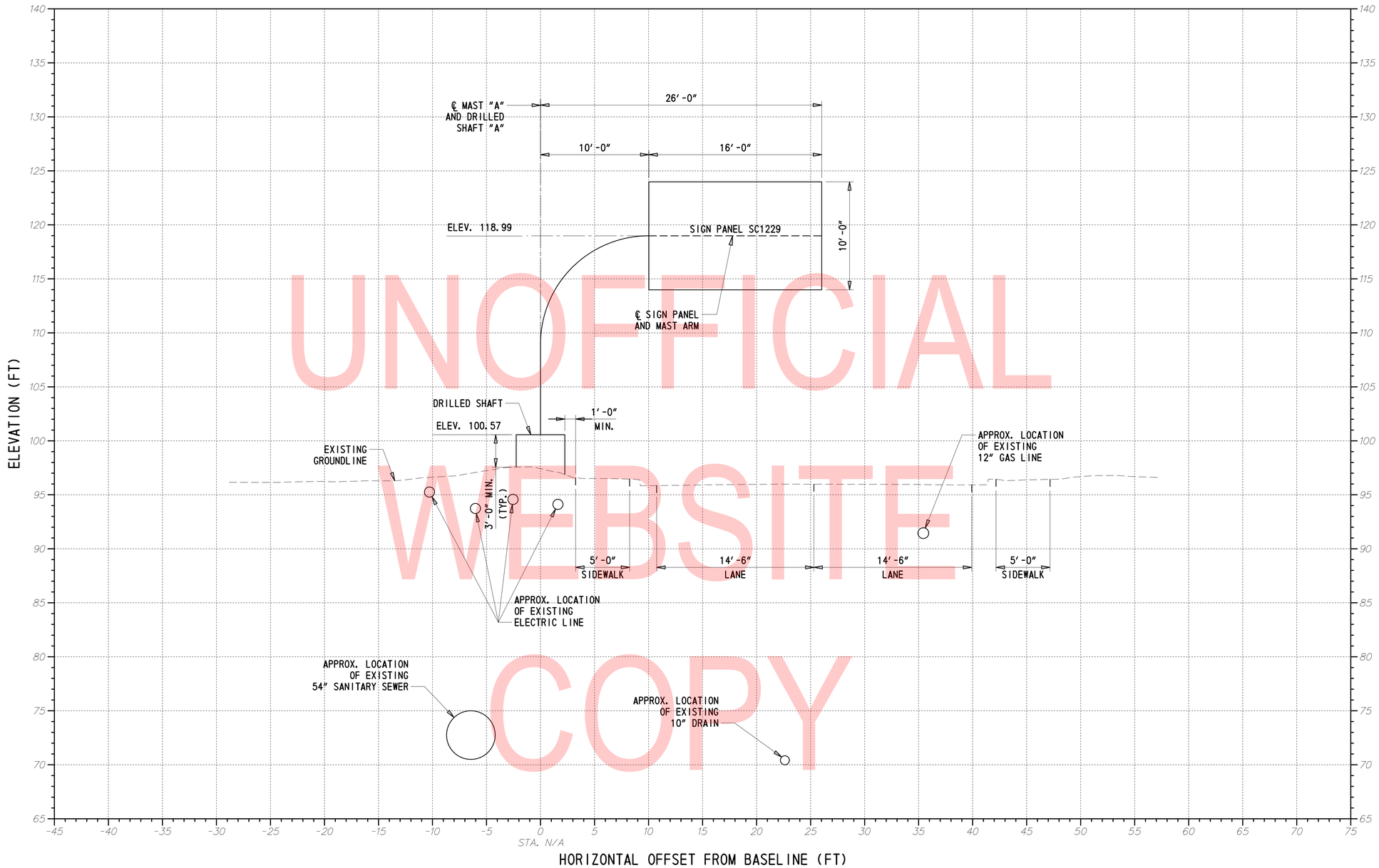

UNOFFICIAL WEBSITE COPY

PROPOSED SIGN STRUCTURE SC1229

STA. N/A
WEST 9TH STREET
(LOOKING WITH TRAFFIC)

NOTE:

1. *CROSS SECTIONS ARE TAKEN NORMAL TO ROADWAY.*
2. *UTILITY LOCATIONS ARE APPROXIMATE. THE ENGINEER SHALL REQUIRE THE CONTRACTOR TO EXCAVATE TEST PITS AT POINTS OF POSSIBLE UTILITY CONFLICTS, TO DETERMINE IF A CONFLICT EXISTS. IF A CONFLICT EXISTS, ANY CONFLICTS SHALL BE COORDINATED BY THE CONTRACTOR, WITH THE ENGINEER AND THE UTILITY COMPANY INVOLVED. THE ENGINEER SHALL ULTIMATELY DETERMINE THE SOLUTION TO THE UTILITY CONFLICT.*

ADDENDA / REVISIONS	SCALE 0 5 10 15 FEET	CANTILEVER AND OVERHEAD SIGN STRUCTURES, I-95	CONTRACT T201907002	BRIDGE NO. N/A	CROSS SECTION SIGN STRUCTURE SC1229	XS-08
			COUNTY NEW CASTLE	DESIGNED BY: AMP		SECTION TY
				CHECKED BY: JWS		SHEET NO. 64

8/13/2019
T:\Dover\Projects\425025,14\600_CADD\05_Official\XS09_SC1229.dgn

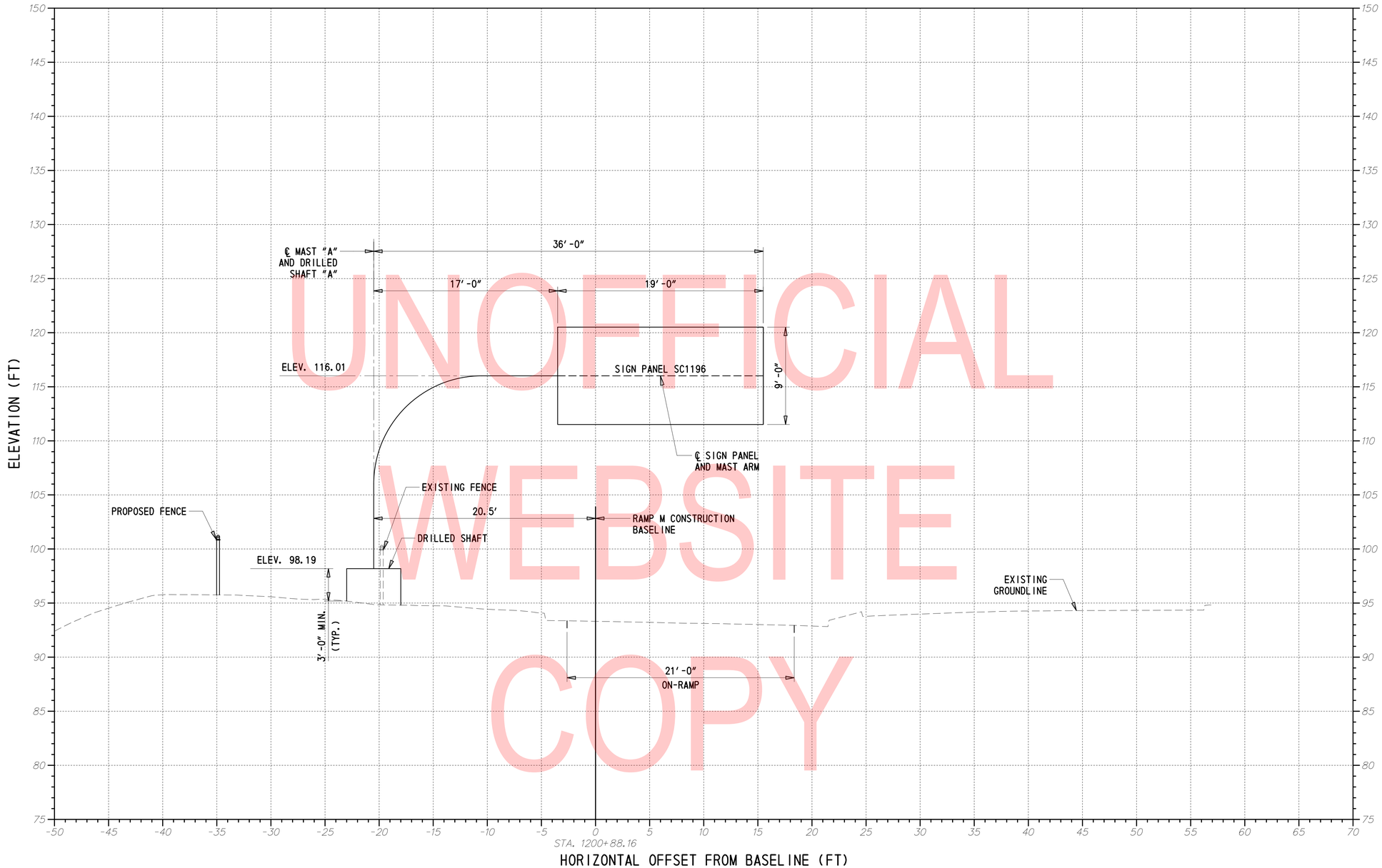

UNOFFICIAL WEBSITE COPY

PROPOSED SIGN STRUCTURE SC1196

STA. 1200+88.16
RAMP M CONSTRUCTION BASELINE
(LOOKING STATIONS AHEAD)

NOTE:

1. *CROSS SECTIONS ARE TAKEN NORMAL TO ROADWAY.*
2. *UTILITY LOCATIONS ARE APPROXIMATE. THE ENGINEER SHALL REQUIRE THE CONTRACTOR TO EXCAVATE TEST PITS AT POINTS OF POSSIBLE UTILITY CONFLICTS, TO DETERMINE IF A CONFLICT EXISTS. IF A CONFLICT EXISTS, ANY CONFLICTS SHALL BE COORDINATED BY THE CONTRACTOR, WITH THE ENGINEER AND THE UTILITY COMPANY INVOLVED. THE ENGINEER SHALL ULTIMATELY DETERMINE THE SOLUTION TO THE UTILITY CONFLICT.*

ADDENDA / REVISIONS	SCALE 0 5 10 15 FEET	CANTILEVER AND OVERHEAD SIGN STRUCTURES, I-95	CONTRACT T201907002	BRIDGE NO. N/A	CROSS SECTION SIGN STRUCTURE SC1196	XS-09
			COUNTY NEW CASTLE	DESIGNED BY: AMP		SECTION TY
				CHECKED BY: JWS		SHEET NO. 65

8/13/2019
T:\Dover\Projects\425025.14\600_CADD\05_Official\XS10_SC1196.dgn

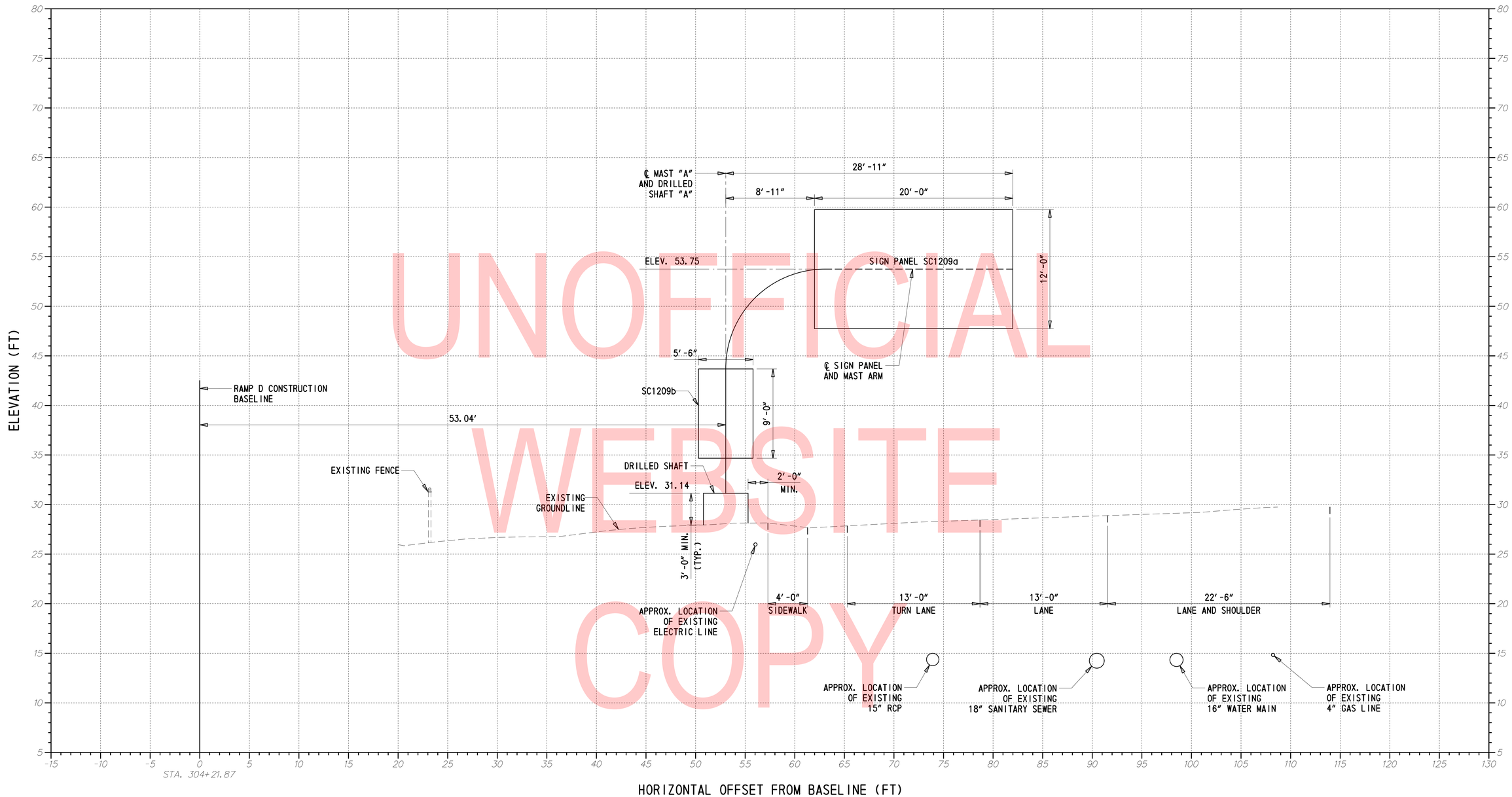

UNOFFICIAL WEBSITE COPY

PROPOSED SIGN STRUCTURE SC1209

STA. 304+21.87
RAMP D CONSTRUCTION BASELINE
(LOOKING STATIONS AHEAD)

NOTE:

1. *CROSS SECTIONS ARE TAKEN NORMAL TO ROADWAY.*
2. *UTILITY LOCATIONS ARE APPROXIMATE. THE ENGINEER SHALL REQUIRE THE CONTRACTOR TO EXCAVATE TEST PITS AT POINTS OF POSSIBLE UTILITY CONFLICTS, TO DETERMINE IF A CONFLICT EXISTS. IF A CONFLICT EXISTS, ANY CONFLICTS SHALL BE COORDINATED BY THE CONTRACTOR, WITH THE ENGINEER AND THE UTILITY COMPANY INVOLVED. THE ENGINEER SHALL ULTIMATELY DETERMINE THE SOLUTION TO THE UTILITY CONFLICT.*

ADDENDA / REVISIONS		SCALE 0 5 10 15 FEET	CANTILEVER AND OVERHEAD SIGN STRUCTURES, I-95	CONTRACT T201907002	BRIDGE NO. N/A	CROSS SECTION SIGN STRUCTURE SC1209	XS-10
				COUNTY NEW CASTLE	DESIGNED BY: AMP		SECTION TY
					CHECKED BY: JWS		SHEET NO. 66

8/13/2019
T:\Dover\Projects\425025.14\600_CADD\05_Official\XS11_SC1209.dgn

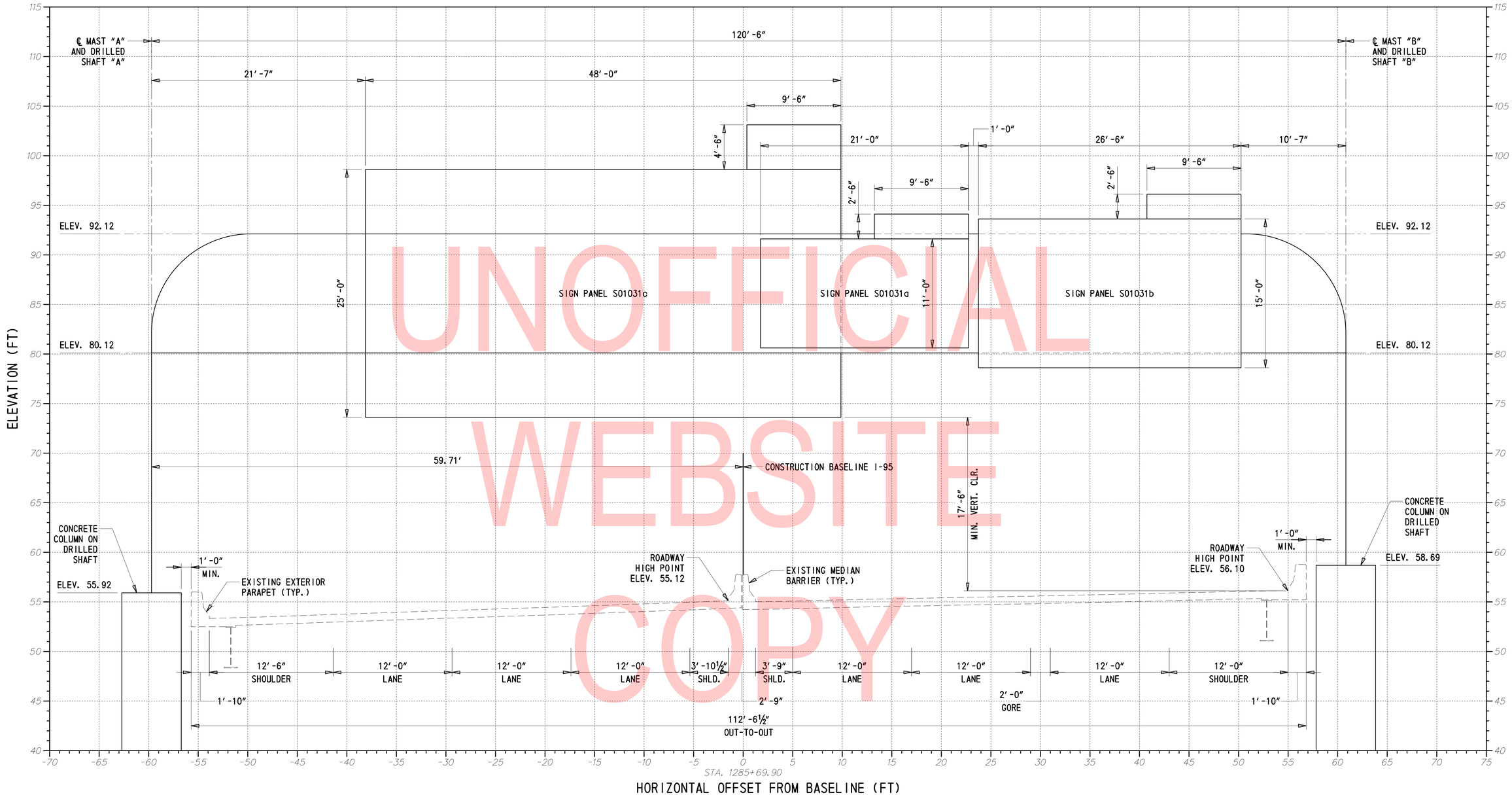

UNOFFICIAL WEBSITE COPY

PROPOSED SIGN STRUCTURE S01031

STA. 1285+69.90
I-95 BASELINE
(LOOKING STATIONS AHEAD)

NOTE:

1. *CROSS SECTIONS ARE TAKEN NORMAL TO ROADWAY.*

ADDENDA / REVISIONS	SCALE 0 5 10 15 FEET	CANTILEVER AND OVERHEAD SIGN STRUCTURES, I-95	CONTRACT T201907002	BRIDGE NO. N/A	CROSS SECTION SIGN STRUCTURE S01031	XS-11
			COUNTY NEW CASTLE	DESIGNED BY: AMP		SECTION TY
				CHECKED BY: JWS		SHEET NO. 67

8/13/2019
T:\Dover\Projects\425025;14\600_CADD\05_Official\XS12_S01031.dgn

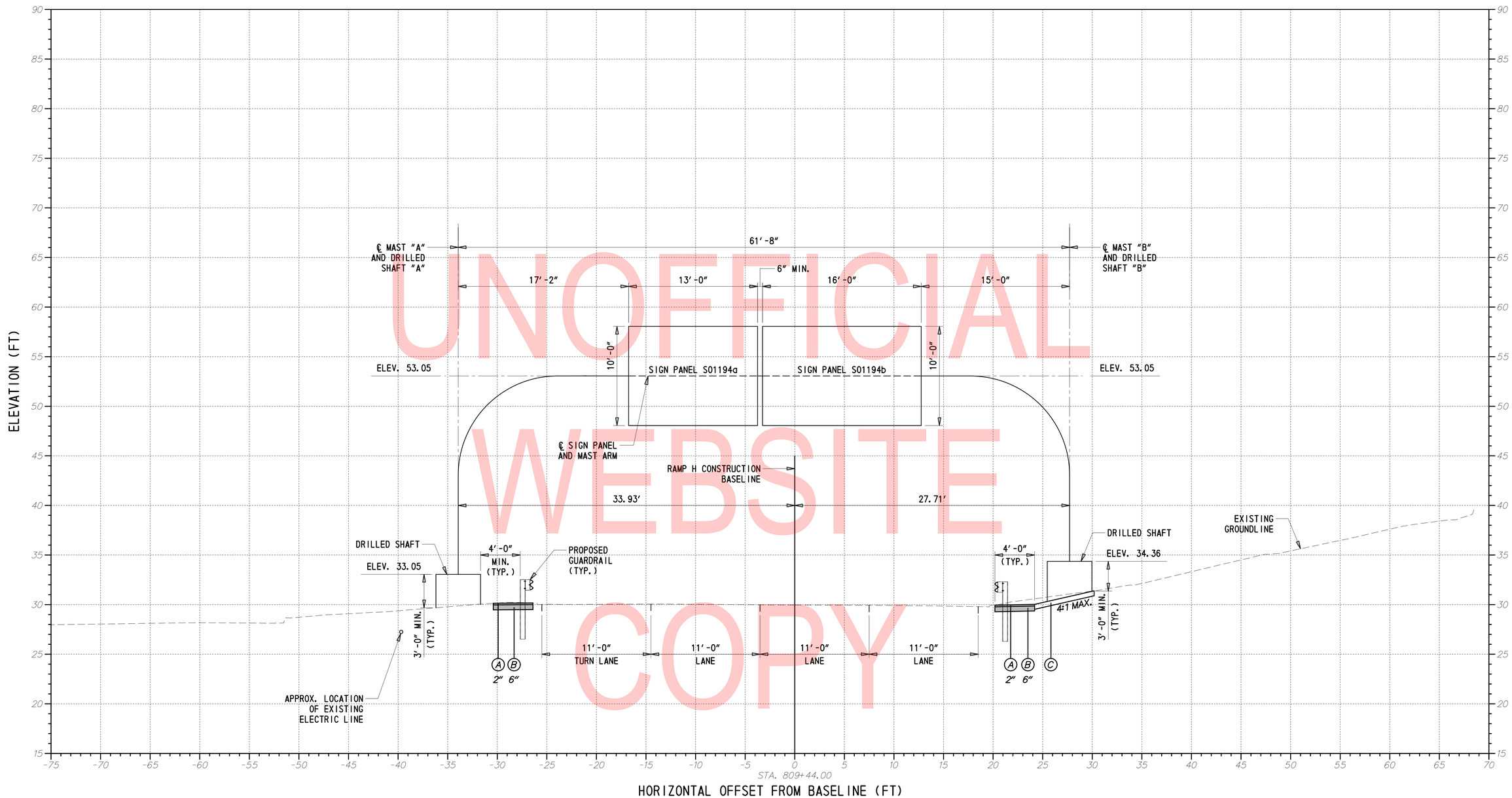

UNOFFICIAL WEBSITE COPY

LEGEND

- (A) ITEM 401044 - SUPERPAVE TYPE C, PG 70-22 (NON-CARBONATE STONE)
- (B) ITEM 301001 - GRADED AGGREGATE BASE COURSE, TYPE B
- (C) ITEM 908004 - TOPSOIL, 6" DEPTH
  ITEM 908014 - PERMANENT GRASS SEEDING, DRY GROUND

PROPOSED SIGN STRUCTURE S01194

STA. 809+44.00
RAMP H CONSTRUCTION BASELINE
(LOOKING STATIONS AHEAD)

NOTE:

1. *CROSS SECTIONS ARE TAKEN NORMAL TO ROADWAY.*
2. *UTILITY LOCATIONS ARE APPROXIMATE. THE ENGINEER SHALL REQUIRE THE CONTRACTOR TO EXCAVATE TEST PITS AT POINTS OF POSSIBLE UTILITY CONFLICTS, TO DETERMINE IF A CONFLICT EXISTS. IF A CONFLICT EXISTS, ANY CONFLICTS SHALL BE COORDINATED BY THE CONTRACTOR, WITH THE ENGINEER AND THE UTILITY COMPANY INVOLVED. THE ENGINEER SHALL ULTIMATELY DETERMINE THE SOLUTION TO THE UTILITY CONFLICT.*

ADDENDA / REVISIONS	

SCALE: 0 5 10 15 FEET

CANTILEVER AND OVERHEAD SIGN STRUCTURES, I-95

CONTRACT	BRIDGE NO.	N/A
T201907002	DESIGNED BY: AMP	
COUNTY	CHECKED BY: JWS	
NEW CASTLE		

CROSS SECTION SIGN STRUCTURE S01194

XS-12
SECTION
TY
SHEET NO.
68

8/13/2019
T:\Dover\Projects\425025.14\600_CADD\05_Official\XS13_S01194.dgn

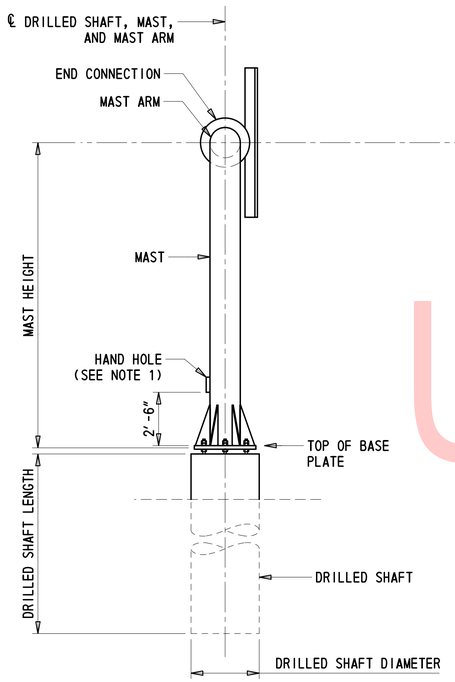

END VIEW

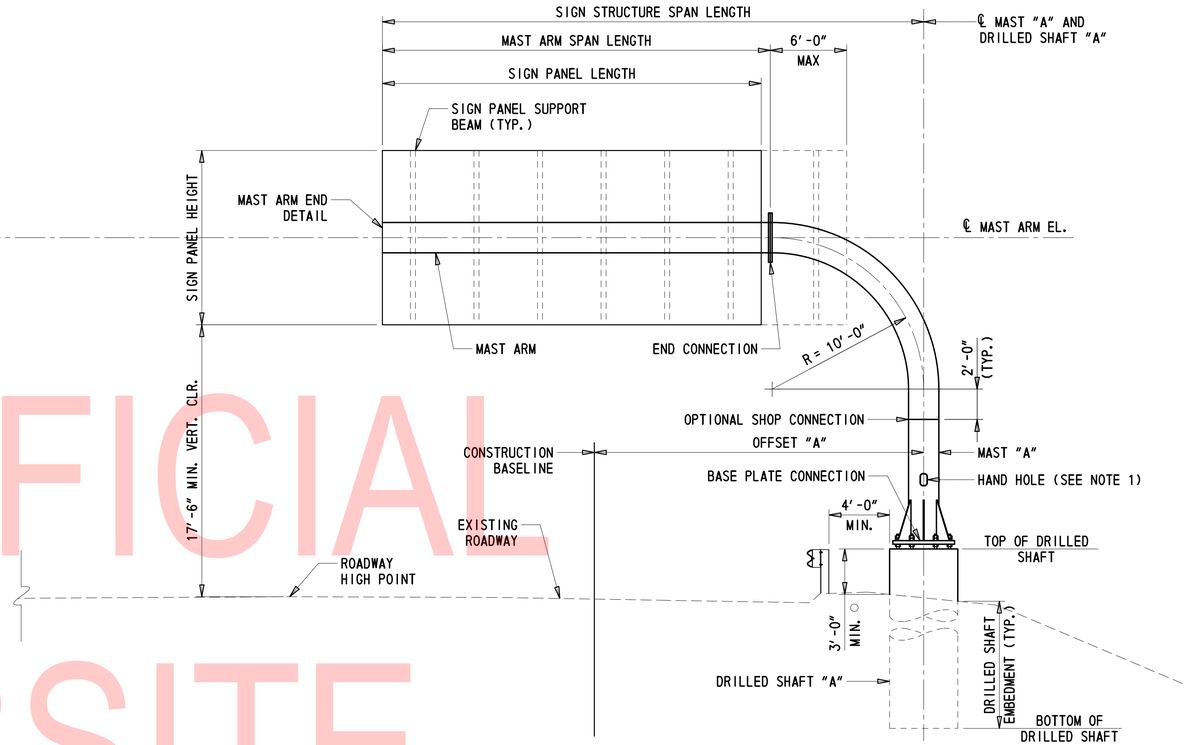

ELEVATION

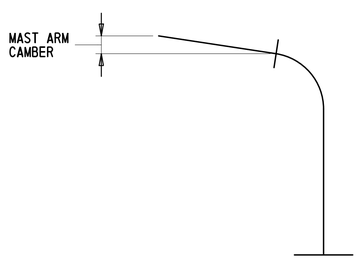

CAMBER DIAGRAM

MAST ARM CAMBER MUST INCLUDE BOTH MAST ARM AND MAST DEFLECTION. BACK RAKING OF MAST IS NOT PERMITTED.

UNOFFICIAL WEBSITE COPY

SIGN STRUCTURE GEOMETRY

SIGN STRUCTURE NO.	ACTUAL SIGN PANEL AREA (SF)	DESIGN SIGN PANEL AREA (SF)	SIGN STRUCTURE SPAN LENGTH	MAST ARM SPAN LENGTH	℄ MAST ARM EL.	MAST "A" HEIGHT	MAST ARM CAMBER
SC1032	303.8	349.3	33'-9"	23'-9"	95.05	18'-10"	2.72"
SC1034	275.8	317.1	38'-11"	28'-11"	93.21	18'-4"	2.98"
SC1035	421.3	484.4	32'-6"	22'-6"	96.00	16'-0"	1.72"
SC1036	338.8	389.6	39'-7"	29'-7"	101.14	19'-2"	2.95"
SC1037	421.3	484.4	32'-5"	22'-5"	102.21	18'-10"	1.87"
SC1038	305.5	351.3	35'-2"	25'-2"	225.12	21'-7"	2.55"
SC1208	198.0	227.7	28'-3"	18'-3"	48.33	19'-8"	1.66"
SC1229	160.0	184.0	26'-0"	16'-0"	118.99	18'-0"	1.17"
SC1196	171.0	196.7	36'-0"	26'-0"	116.01	17'-5"	2.93"
SC1209	289.5	332.9	28'-11"	18'-11"	53.75	22'-2"	1.92"

NOTE:

1. *LOCATE HAND HOLE ON THE DOWN-TRAFFIC SIDE OF THE MAST, WITH A DIRECTION THAT IS 90 DEGREES TO THE PLANE CONTAINING THE MAST ARM.*

CROSS-REFERENCE NOTES:

1. *FOR SIGN STRUCTURE NOTES, SEE DWG. PN-02.*
2. *FOR SIGN STRUCTURE LOCATIONS, SEE DWG. PN-02.*
3. *FOR SIGN STRUCTURE CROSS SECTIONS, SEE DWGS. XS-01 TO XS-12.*
4. *FOR SIGN PANEL LAYOUTS, SEE DWGS. SS-01 TO SS-06.*
5. *FOR FOUNDATION DETAILS, SEE DWG. DT-04.*
6. *FOR BASE PLATE CONNECTION DETAILS, SEE DWG. DT-01.*
7. *FOR END CONNECTION DETAILS, SEE DWG. DT-01.*
8. *FOR SIGN PANEL SUPPORT BEAM DETAILS, SEE DWGS. DT-02 AND DT-03.*
9. *FOR OPTIONAL SHOP CONNECTION DETAILS, SEE DWG. DT-01.*
10. *FOR MAST ARM END DETAILS, SEE DWG. DT-01.*
11. *FOR HAND HOLE DETAIL, SEE DWG. DT-02.*

ADDENDA / REVISIONS

NOT TO SCALE

CANTILEVER AND OVERHEAD SIGN STRUCTURES, I-95

CONTRACT T201907002 | COUNTY NEW CASTLE | BRIDGE NO. N/A | DESIGNED BY: AMP | CHECKED BY: JWS

CANTILEVER SIGN STRUCTURE ELEVATION AND END VIEW

PE-01 | SECTION TY | SHEET NO. 69

8/13/2019
T:\Dover\Projects\425025.14.600_CADD\05_Official\PE01.dgn

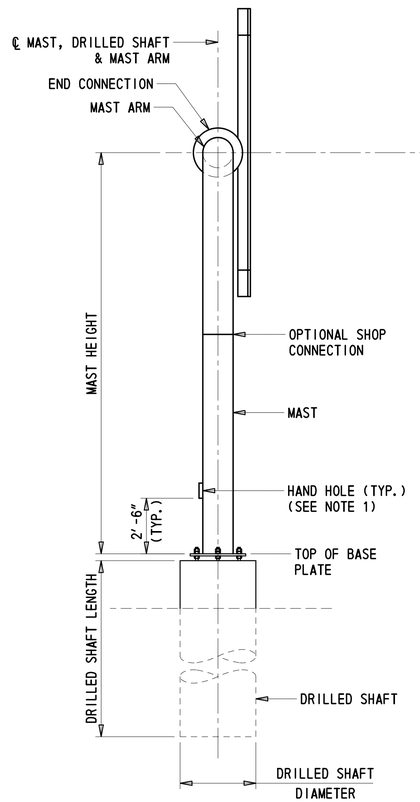

END VIEW

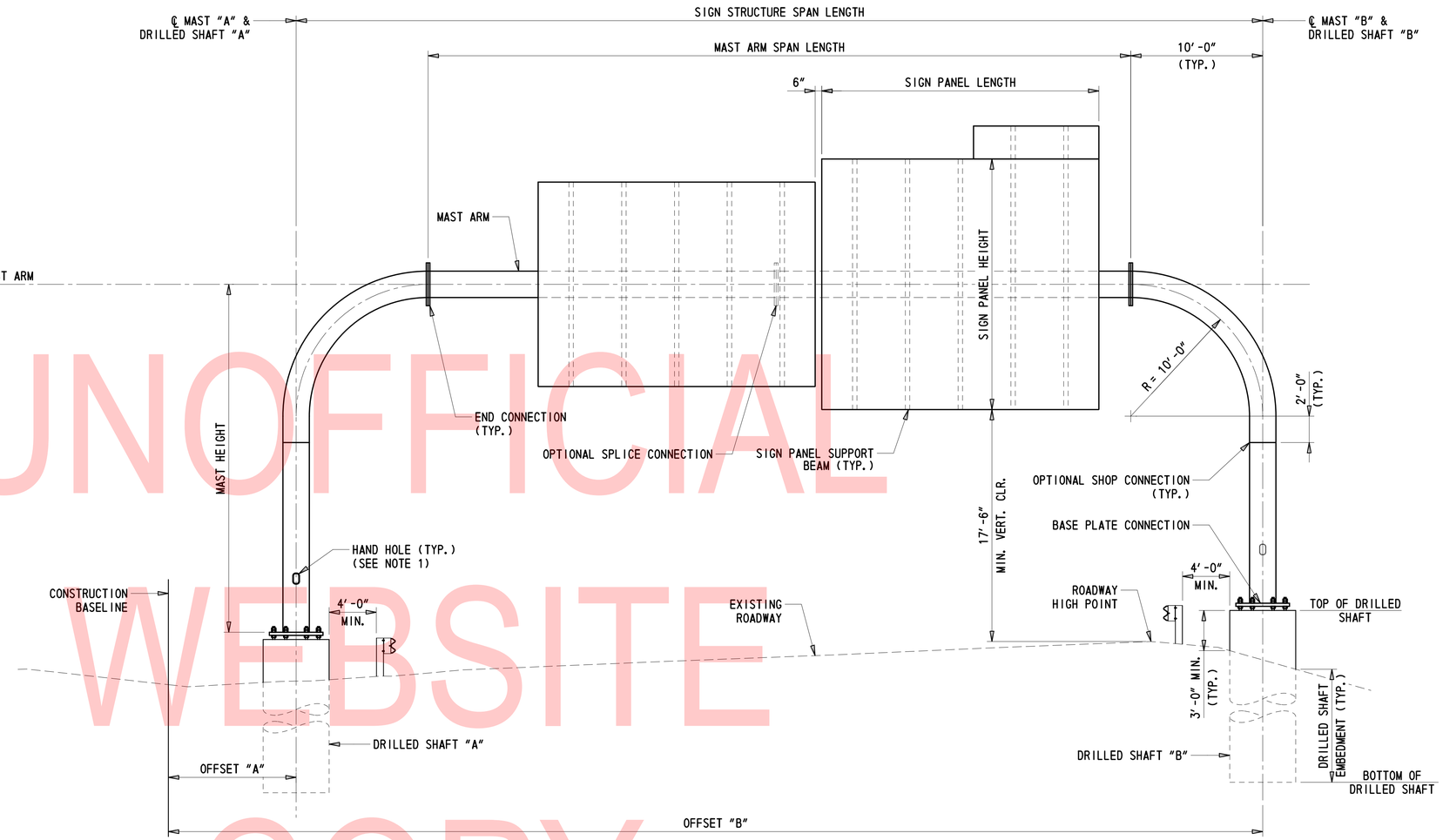

ELEVATION

(LOOKING STATIONS AHEAD)

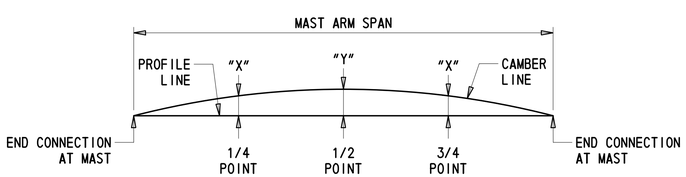

CAMBER DIAGRAM

SIGN STRUCTURE GEOMETRY									
SIGN STRUCTURE NO.	ACTUAL SIGN PANEL AREA (SF)	DESIGN SIGN PANEL AREA (SF)	SIGN STRUCTURE SPAN LENGTH	MAST ARM SPAN LENGTH	℄ MAST ARM EL.	MAST "A" HEIGHT	MAST "B" HEIGHT	CAMBER "X"	CAMBER "Y"
S01194	290.0	333.5	61′-8″	41′-8″	53.05	19′-7″	18′-3″	0.59″	0.75″

NOTE:

1. *LOCATE HAND HOLE ON THE DOWN-TRAFFIC SIDE OF EACH MAST, WITH A DIRECTION THAT IS 90 DEGREES TO THE PLANE CONTAINING THE MAST ARM.*

CROSS-REFERENCE NOTES:

1. *FOR SIGN STRUCTURE NOTES, SEE DWG. PN-02.*
2. *FOR SIGN STRUCTURE LOCATIONS, SEE DWG. PN-02.*
3. *FOR SIGN STRUCTURE CROSS SECTIONS, SEE DWGS. XS-01 TO XS-12.*
4. *FOR SIGN PANEL LAYOUTS, SEE DWGS. SS-01 TO SS-06.*
5. *FOR FOUNDATION DETAILS, SEE DWG. DT-04.*
6. *FOR BASE PLATE CONNECTION DETAILS, SEE DWG. DT-01.*
7. *FOR END CONNECTION DETAILS, SEE DWG. DT-01.*
8. *FOR SIGN PANEL SUPPORT BEAM DETAILS, SEE DWGS. DT-02 AND DT-03.*
9. *FOR OPTIONAL SHOP CONNECTION DETAILS, SEE DWG. DT-01.*
10. *FOR MAST ARM END DETAILS, SEE DWG. DT-01.*
11. *FOR HAND HOLE DETAIL, SEE DWG. DT-02.*

UNOFFICIAL WEBSITE COPY

ADDENDA / REVISIONS

NOT TO SCALE

CANTILEVER AND OVERHEAD SIGN STRUCTURES, I-95

CONTRACT T201907002 | COUNTY NEW CASTLE | BRIDGE NO. N/A | DESIGNED BY: AMP | CHECKED BY: JWS

OVERHEAD SIGN STRUCTURE ELEVATION AND END VIEW

PE-02 | SECTION TY | SHEET NO. 70

8/13/2019
T:\Dover\Projects\425025.14\600_CADD\05_Official\PE02.dgn

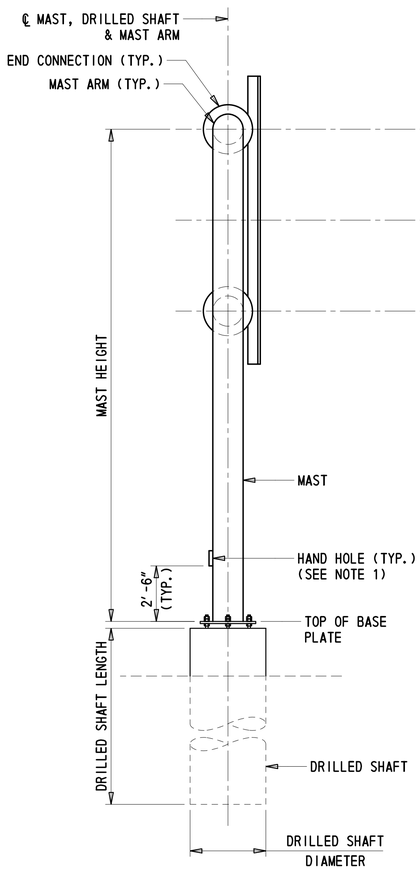

END VIEW

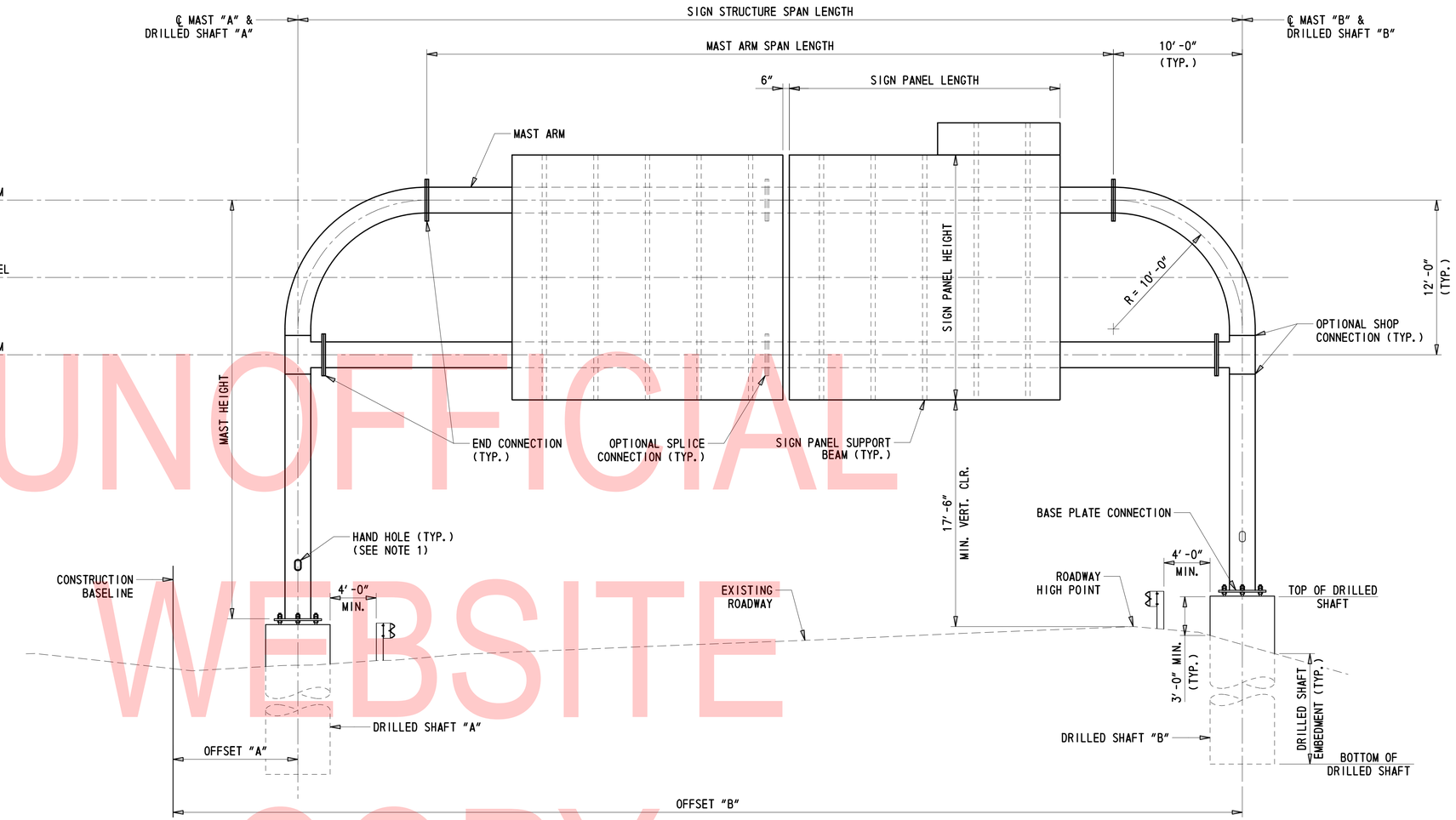

ELEVATION

(LOOKING STATIONS AHEAD)

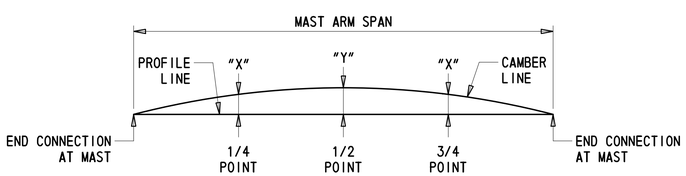

CAMBER DIAGRAM

SIGN STRUCTURE GEOMETRY

SIGN STRUCTURE NO.	ACTUAL SIGN PANEL AREA (SF)	DESIGN SIGN PANEL AREA (SF)	SIGN STRUCTURE SPAN LENGTH	MAST ARM SPAN LENGTH	℄ TOP MAST ARM EL.	MAST "A" HEIGHT	MAST "B" HEIGHT	CAMBER "X"	CAMBER "Y"
S01031	1918.8	2206.6	120'-6"	100'-6"	92.12	35'-9"	33'-0"	1.34"	2.20"

NOTE:

1. *LOCATE HAND HOLE ON THE DOWN-TRAFFIC SIDE OF EACH MAST, WITH A DIRECTION THAT IS 90 DEGREES TO THE PLANE CONTAINING THE MAST ARM.*

CROSS-REFERENCE NOTES:

1. *FOR SIGN STRUCTURE NOTES, SEE DWG. PN-02.*
2. *FOR SIGN STRUCTURE LOCATIONS, SEE DWG. PN-02.*
3. *FOR SIGN STRUCTURE CROSS SECTIONS, SEE DWGS. XS-01 TO XS-12.*
4. *FOR SIGN PANEL LAYOUTS, SEE DWGS. SS-01 TO SS-06.*
5. *FOR FOUNDATION DETAILS, SEE DWG. DT-04.*
6. *FOR BASE PLATE CONNECTION DETAILS, SEE DWG. DT-01.*
7. *FOR END CONNECTION DETAILS, SEE DWG. DT-01.*
8. *FOR SIGN PANEL SUPPORT BEAM DETAILS, SEE DWGS. DT-02 AND DT-03.*
9. *FOR OPTIONAL SHOP CONNECTION DETAILS, SEE DWG. DT-01.*
10. *FOR MAST ARM END DETAILS, SEE DWG. DT-01.*
11. *FOR HAND HOLE DETAIL, SEE DWG. DT-02.*
12. *FOR TEE CONNECTION DETAIL, SEE DWG. DT-03.*

UNOFFICIAL WEBSITE COPY

ADDENDA / REVISIONS	NOT TO SCALE	CANTILEVER AND OVERHEAD SIGN STRUCTURES, I-95	CONTRACT T201907002	BRIDGE NO. N/A	OVERHEAD SIGN STRUCTURE ELEVATION AND END VIEW	PE-03
			COUNTY NEW CASTLE	DESIGNED BY: AMP		SECTION TY
				CHECKED BY: JWS		SHEET NO. 71

8/13/2019
T:\Dover\Projects\425025.14\600_CADD\05_Official\PE03.dgn

SIGN STRUCTURE MEMBER DIMENSIONS

	MAST AND MAST ARM		ANCHOR BOLTS				BASE PLATE		H. S. SPLICE BOLTS			SPLICE PLATE	
SIGN STRUCTURE NO.	OUTSIDE DIA.	THICKNESS	NUMBER	BOLT DIA.	BOLT CIRCLE DIA.	EMBEDMENT	PLATE DIA.	NO. OF STIFFENERS	NUMBER	BOLT DIA.	BOLT CIRCLE DIA.	PLATE DIA.	NO. OF STIFFENERS
SC1032	24″	0.625″	12	2.0″	36″	48″	44″	12	12	1.5″	32″	38″	-
SC1034	28″	0.625″	16	2.0″	40″	48″	48″	8	16	1.5″	36″	42″	-
SC1035	28″	0.625″	16	2.0″	40″	48″	48″	8	10	1.5″	36″	42″	-
SC1036	30″	0.625″	16	2.0″	42″	48″	50″	8	18	1.5″	38″	44″	-
SC1037	28″	0.625″	16	2.0″	40″	48″	48″	8	10	1.5″	36″	42″	-
SC1038	28″	0.500″	12	2.0″	40″	48″	48″	12	12	1.5″	36″	42″	-
SC1208	24″	0.500″	8	2.0″	36″	48″	44″	8	8	1.5″	32″	38″	-
SC1229	24″	0.500″	8	2.0″	36″	48″	44″	8	8	1.5″	32″	38″	-
SC1196	24″	0.500″	10	2.0″	36″	48″	44″	10	10	1.5″	32″	38″	-
SC1209	24″	0.500″	8	2.0″	36″	48″	44″	8	8	1.5″	32″	38″	-
S01031*	36″	0.875″	22	2.5″	54″	48″	62″	-	14	1.5″	44″	50″	-
S01194	24″	0.500″	8	2.0″	36″	48″	44″	-	8	1.5″	32″	38″	-

* ANCHOR BOLTS FOR SIGN STRUCTURE S01031 SHALL CONFORM TO AASHTO M314, GRADE 105.

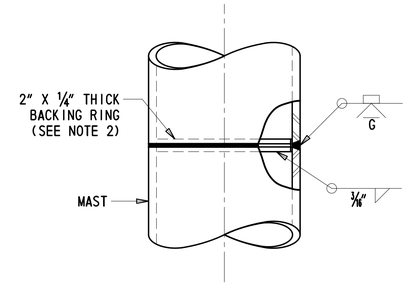

OPTIONAL SHOP CONNECTION DETAIL

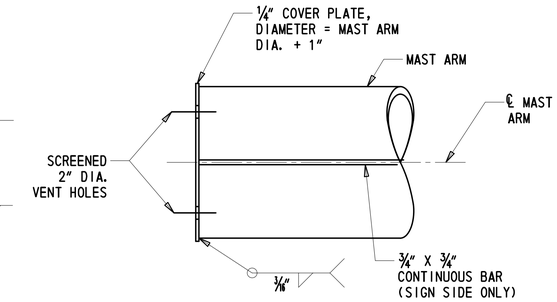

MAST ARM END DETAIL

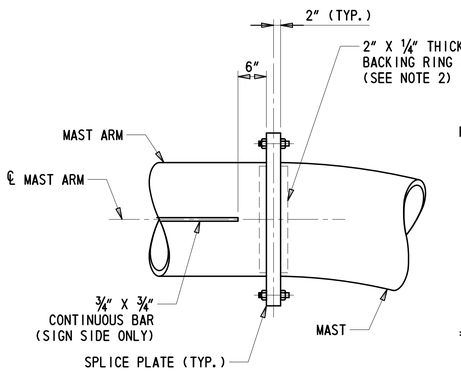

ELEVATION

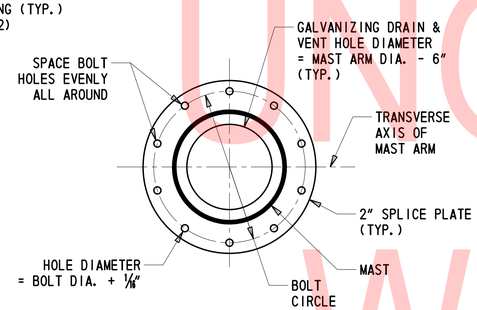

SECTION

END CONNECTION/SPLICE PLATE DETAILS

(10 BOLT CONFIGURATION SHOWN, OTHER CONFIGURATIONS SIMILAR)

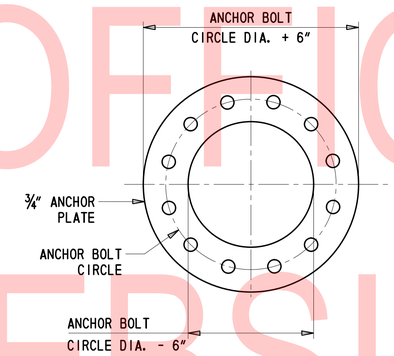

PLAN

ANCHOR PLATE DETAIL

(12 BOLT CONFIGURATION SHOWN, OTHER CONFIGURATIONS SIMILAR)

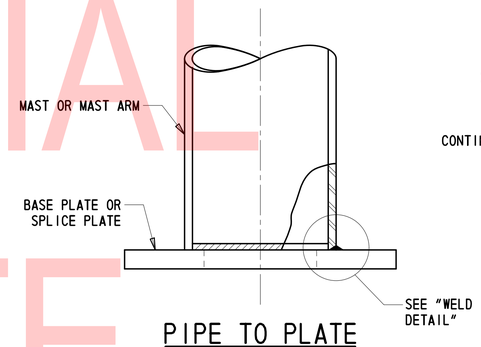

PIPE TO PLATE CONNECTION DETAIL

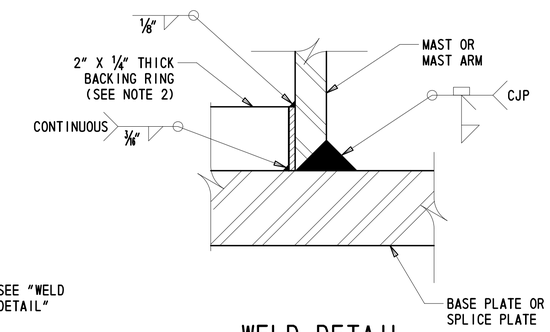

WELD DETAIL

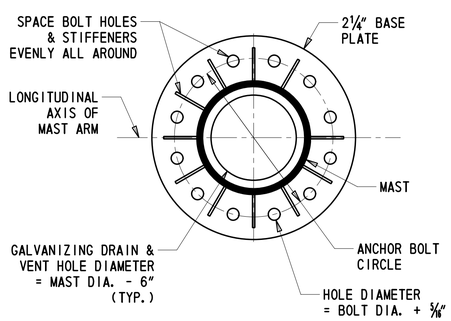

PLAN

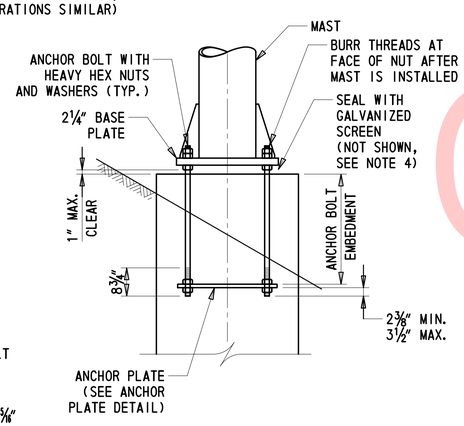

ELEVATION

(STIFFENERS NOT SHOWN FOR CLARITY)

BASE PLATE CONNECTION DETAILS

(12 BOLT CONFIGURATION SHOWN, OTHER CONFIGURATIONS SIMILAR)

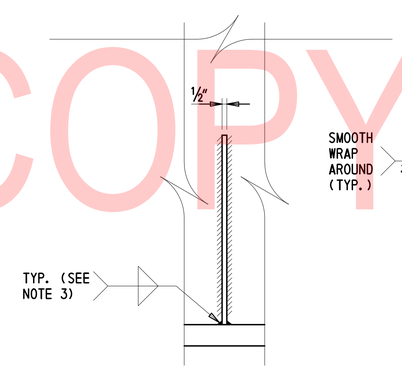

SECTION

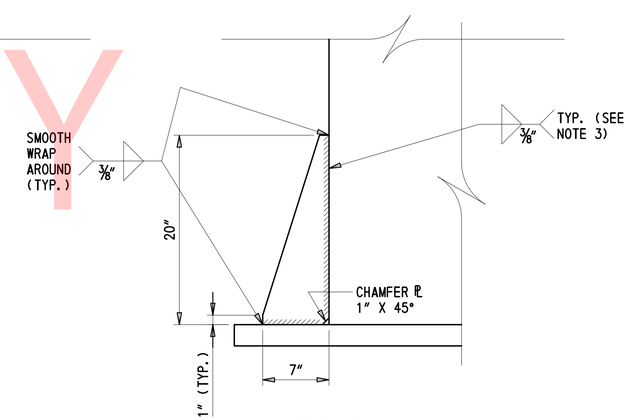

ELEVATION

STIFFENER DETAILS

(BASE CONNECTION)

NOTES:

1. PROVIDE STIFFENERS AS INDICATED IN SIGN STRUCTURE MEMBER DIMENSIONS TABLE.
2. TOP WELD OF THE BACKING RING SHALL BE MADE AFTER ULTRASONIC INSPECTION OF THE GROOVE WELD. BACKING RING MUST BE FABRICATED AS A CONTINUOUS RING.
3. TERMINATE WELDS ¼″ SHORT OF STIFFENER CHAMFER.
4. SEAL BASE PLATE TO FOUNDATION GAP WITH GALVANIZED STEEL SCREEN, ½″ BY ½″ MESH AND 0.063″ DIAMETER WIRES. SCREEN IS TO PREVENT ENTRY OF RODENTS WHILE PERMITTING DRAINAGE. SCREEN IS TO BE REMOVABLE AND ATTACHED TO THE BASE PLATE WITH STAINLESS STEEL HARDWARE.

CROSS-REFERENCE NOTES:

1. FOR SIGN STRUCTURE NOTES, SEE DWG. PN-02.
2. FOR SIGN PANEL SUPPORT BEAM DETAILS, SEE DWGS. DT-02 AND DT-03.
3. FOR FOUNDATION DETAILS, SEE DWG. DT-04.

UNOFFICIAL WEBSITE COPY

ADDENDA / REVISIONS	NOT TO SCALE	CANTILEVER AND OVERHEAD SIGN STRUCTURES, I-95	CONTRACT T201907002	BRIDGE NO. N/A	SIGN STRUCTURE DETAILS	DT-01
			COUNTY NEW CASTLE	DESIGNED BY: AMP		SECTION TY
				CHECKED BY: JWS		SHEET NO. 72

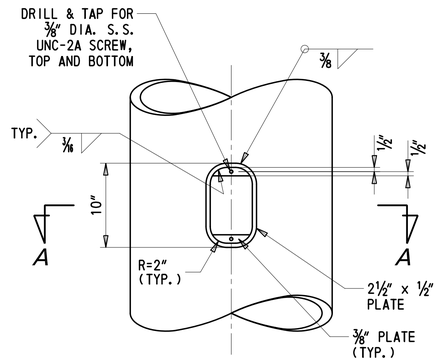

ELEVATION

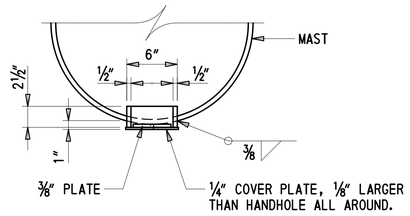

SECTION A-A

REINFORCED HANDHOLE

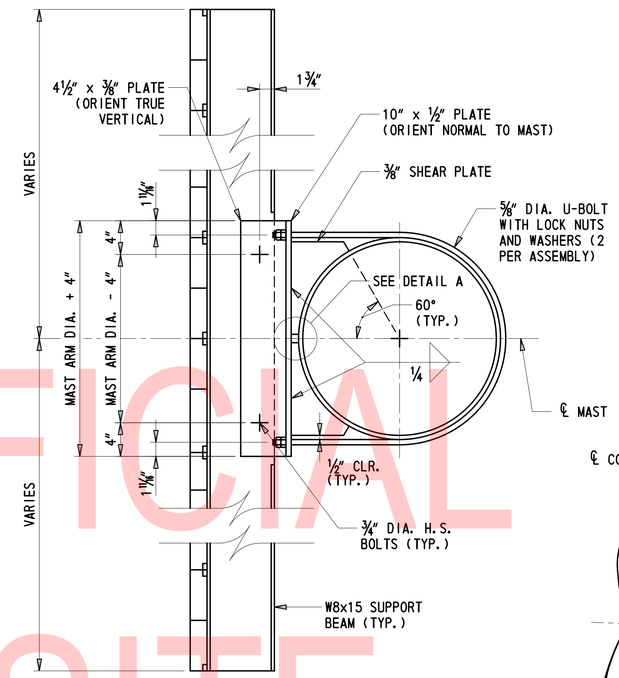

SIGN PANEL SECTION

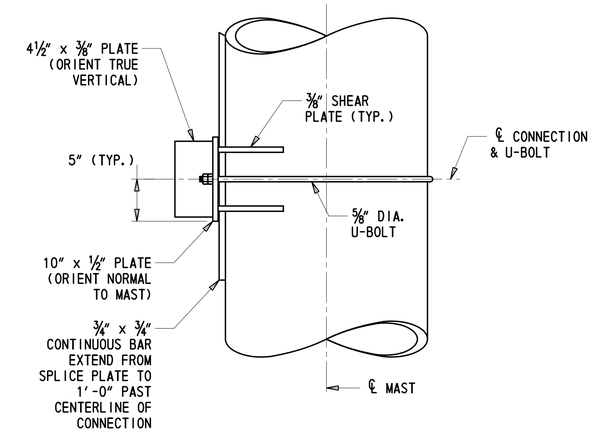

SINGLE U-BOLT PLAN

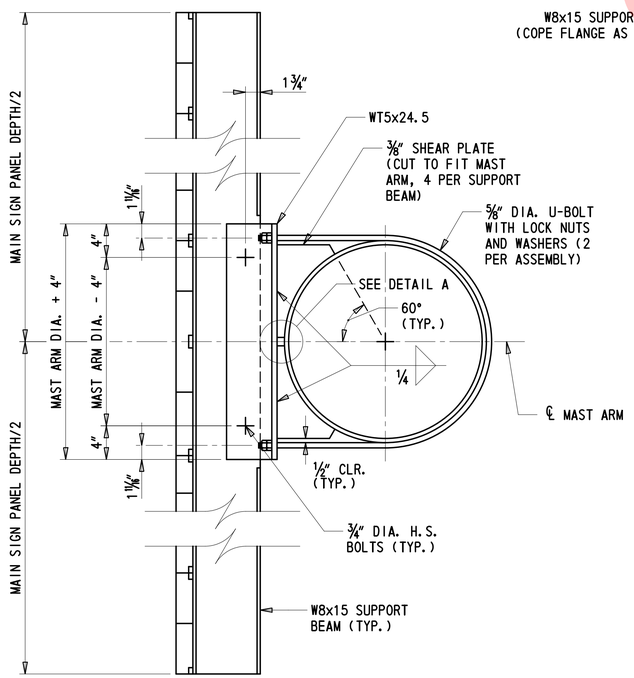

SIGN PANEL SECTION

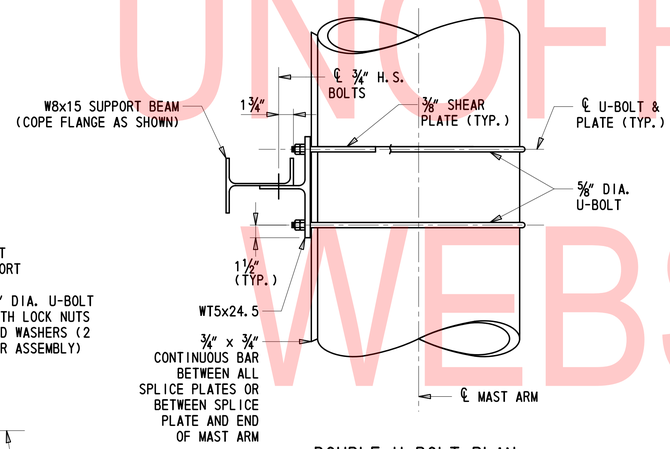

DOUBLE U-BOLT PLAN

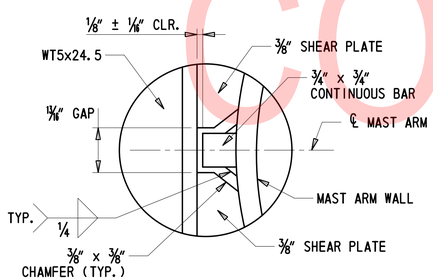

DETAIL A

SUPPORT BEAM TO MAST ARM CONNECTION DETAILS

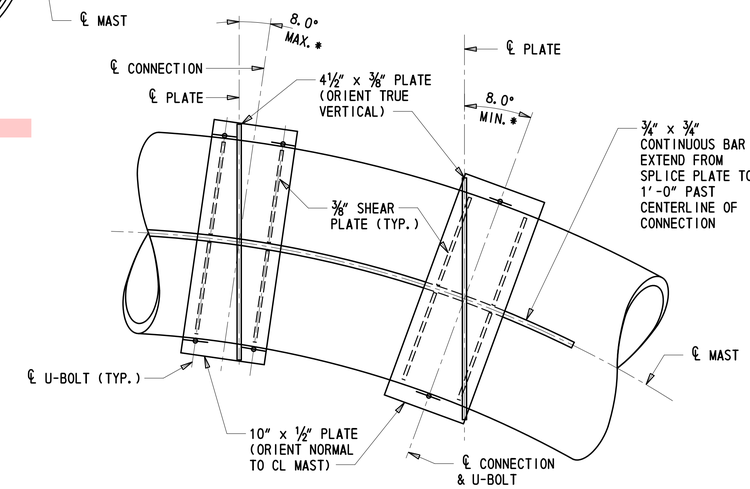

DOUBLE U-BOLT SINGLE U-BOLT

*NOTE: WHEN ANGLE BETWEEN TRUE VERTICAL AND ℄ CONNECTION IS LESS THAN 8.0°, USE DOUBLE U-BOLT DETAIL. WHEN ANGLE BETWEEN TRUE VERTICAL AND ℄ CONNECTION IS GREATER THAN 8.0°, USE SINGLE U-BOLT DETAIL.

SUPPORT BEAM TO CURVED MAST CONNECTION DETAILS

(SUPPORT BEAM NOT SHOWN IN PLAN AND ELEVATION VIEWS FOR CLARITY)

NOTE:

1. *LOCATE SUPPORT BEAMS TO AVOID END AND SPLICE CONNECTIONS. MAXIMUM SPACING = 5'-0". MAXIMUM DISTANCE TO PANEL EDGE = 2'-6".*

CROSS-REFERENCE NOTES:

1. *FOR SIGN STRUCTURE NOTES, SEE DWG. PN-02.*
2. *FOR SIGN PANEL DETAILS, SEE DWGS. SS-01 TO SS-06.*

UNOFFICIAL WEBSITE COPY

ADDENDA / REVISIONS	NOT TO SCALE	CANTILEVER AND OVERHEAD SIGN STRUCTURES, I-95	CONTRACT T201907002	BRIDGE NO. N/A	SIGN STRUCTURE DETAILS	DT-02
			COUNTY NEW CASTLE	DESIGNED BY: AMP		SECTION TY
				CHECKED BY: JWS		SHEET NO. 73

8/13/2019
T:\Dover\Projects\425025.14\600_CADD\05_Official\DT02.dgn

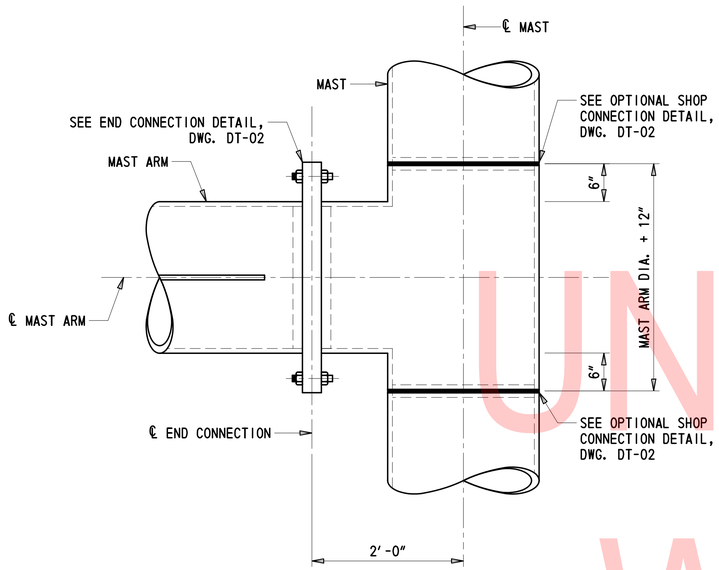

DOUBLE MAST ARM - TEE CONNECTION

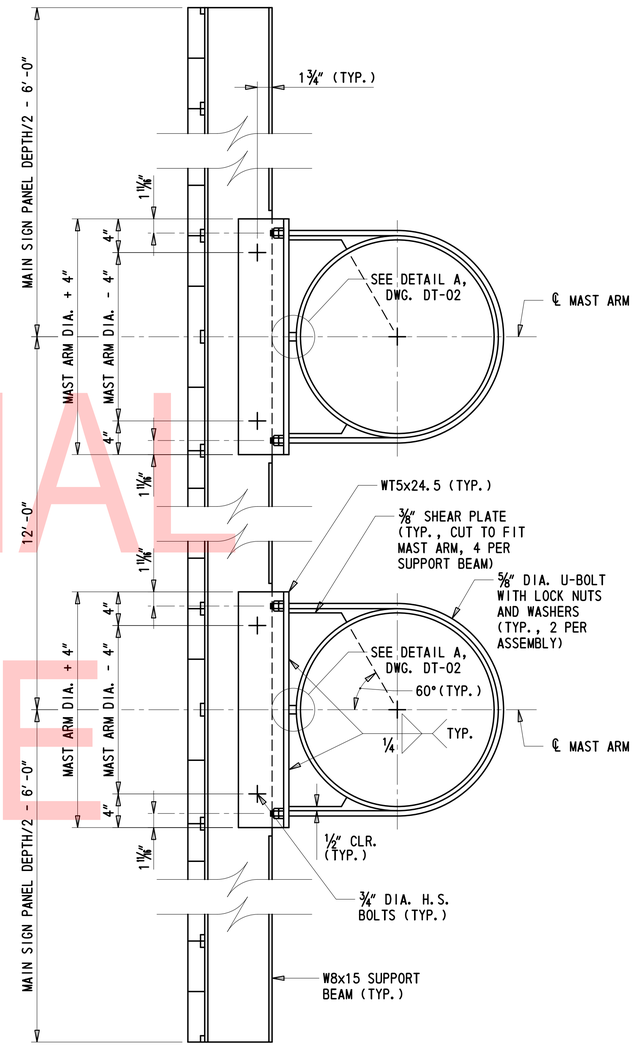

SIGN PANEL SECTION FOR DOUBLE MAST ARM

NOTE:

1. *LOCATE SUPPORT BEAMS TO AVOID END AND SPLICE CONNECTIONS. MAXIMUM SPACING = 5'-0". MAXIMUM DISTANCE TO PANEL EDGE = 2'-6".*

CROSS-REFERENCE NOTES:

1. *FOR SIGN STRUCTURE NOTES, SEE DWG. PN-02.*
2. *FOR SIGN PANEL DETAILS, SEE DWGS. SS-01 TO SS-06.*

UNOFFICIAL WEBSITE COPY

SIGN STRUCTURE FOUNDATION SUMMARY

SIGN STRUCTURE NO.	DRILLED SHAFT OR PEDESTAL "A"								DRILLED SHAFT OR PEDESTAL "B"							
	ROCK-SOCKET (YES/NO)	DIAMETER	TOP EL.	BOTTOM EL.	LENGTH	EMBEDMENT LENGTH	"N"	"S"	ROCK-SOCKET (YES/NO)	DIAMETER	TOP EL.	BOTTOM EL.	LENGTH	EMBEDMENT LENGTH	"N"	"S"
SC1032	NO	4'-6"	75.78	54.78	21'-0"	16'-9"	10	8"	-	-	-	-	-	-	-	-
SC1034	YES	5'-6"	74.49	50.99	23'-6"	18'-6"	13	8"	-	-	-	-	-	-	-	-
SC1035	YES	5'-6"	79.62	48.62	31'-0"	22'-7"	13	6"	-	-	-	-	-	-	-	-
SC1036	YES	5'-6"	81.52	58.02	23'-6"	18'-0"	13	6"	-	-	-	-	-	-	-	-
SC1037	YES	5'-6"	82.96	60.46	22'-6"	16'-9"	13	6"	-	-	-	-	-	-	-	-
SC1038	YES	5'-6"	203.16	183.66	19'-6"	16'-6"	13	10"	-	-	-	-	-	-	-	-
SC1208	NO	4'-6"	28.26	9.76	18'-6"	15'-6"	10	12"	-	-	-	-	-	-	-	-
SC1229	NO	4'-6"	100.57	86.07	14'-6"	11'-0"	10	12"	-	-	-	-	-	-	-	-
SC1196	NO	4'-6"	98.19	79.19	19'-0"	15'-7"	10	8"	-	-	-	-	-	-	-	-
SC1209	NO	4'-6"	31.14	12.14	19'-0"	16'-0"	10	12"	-	-	-	-	-	-	-	-
S01031	NO	6'-0"	55.92	-46.08	102'-0"	53'-0"	18	6"	NO	6'-0"	58.69	-43.31	102'-0"	51'-4"	18	6"
S01194	NO	4'-6"	33.05	17.05	16'-0"	12'-8"	10	12"	NO	4'-6"	34.36	16.36	18'-0"	13'-11"	10	12"

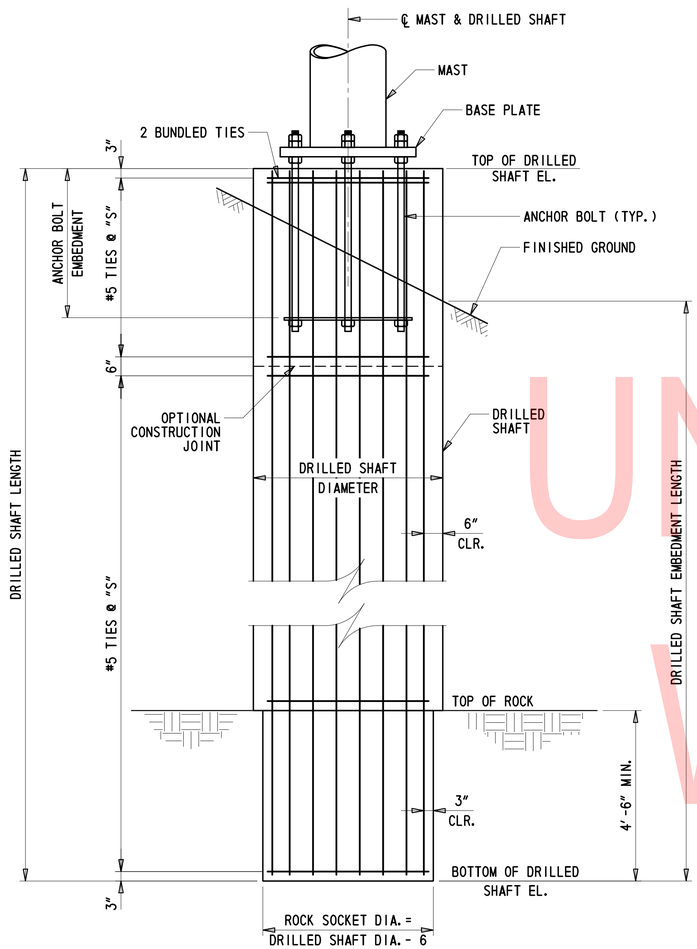

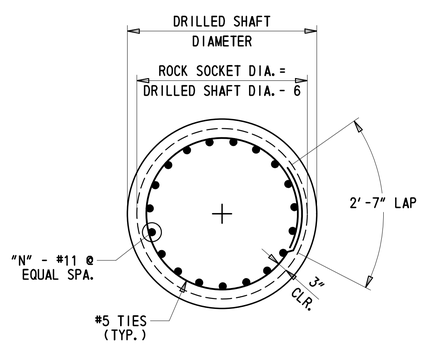

ROCK-SOCKETED DRILLED SHAFT FOUNDATION DETAILS

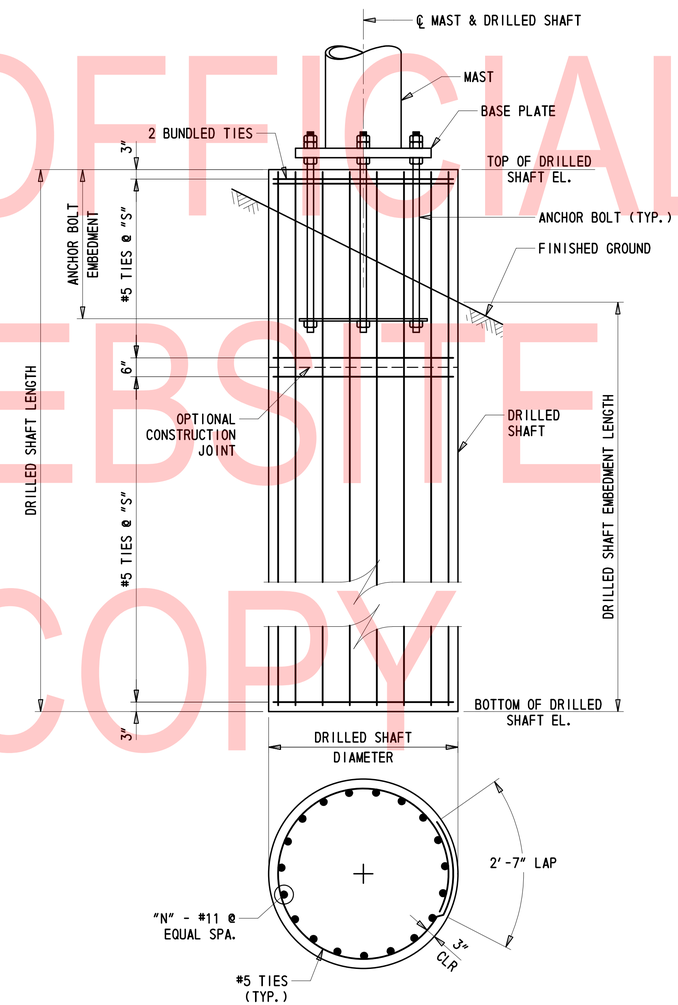

DRILLED SHAFT FOUNDATION DETAILS

CROSS-REFERENCE NOTES:

1. *FOR SIGN STRUCTURE NOTES, SEE DWG. PN-02.*
2. *FOR ANCHOR BOLT AND BASE PLATE DETAILS, SEE DWG. DT-01.*

NOTES:

1. *ALL DRILLED SHAFT CONSTRUCTION SHALL BE IN ACCORDANCE WITH THE DRILLED SHAFTS SPECIAL PROVISION EXCEPT AS MODIFIED BELOW.*
2. *SLOPE TOP OF DRILLED SHAFT 4% FROM CENTER TO NEAR EDGES FOR DRAINAGE.*
3. *TOP OF DRILLED SHAFT SHALL BE 3'-0" MIN. ABOVE FINISHED GROUND.*
4. *TEMPORARY STEEL CASING SHALL BE INSTALLED IN DRILLED SHAFT HOLE UNTIL CONCRETE HAS BEEN PLACED.*
5. *NO PERMANENT CASING SHALL BE USED.*
6. *THE IDENTIFICATION AND OCCURRENCE OF BEDROCK WILL BE FIELD VERIFIED DURING THE INSTALLATION OF THE DRILLED SHAFTS. THE VERIFICATION PROCESS WILL CONSIST OF:*
   - *THE TOP OF BEDROCK SHALL BE DEFINED AT THE DEPTH WHERE SPECIAL EXCAVATION STARTS. SPECIAL EXCAVATION IS DEFINED IN THE DRILLED SHAFT SPECIAL PROVISION.*
   - *IN THE CASE OF TOP-HOLE INSPECTION THE BOTTOM OF SHAFT SHALL BE INSPECTED BY WEIGHTED TAPE USING AT LEAST SIX SEPARATE SOUNDINGS. THE MEASURED THICKNESS OF THE SEDIMENTS SHOULD MEET THE REQUIREMENTS GIVEN IN DRILLED SHAFT SPECIAL PROVISION.*
7. *THE TERMINATION ELEVATIONS OF THE DRILLED SHAFTS WILL BE DETERMINED BY THE ENGINEER BASED ON PROBING RESULTS AND MUST MEET ALL OF THE FOLLOWING CRITERIA:*
   - *BE AT OR BELOW THE BOTTOM OF DRILLED SHAFT ELEVATION PROVIDED IN THE SIGN STRUCTURE FOUNDATION SUMMARY TABLE; AND*
   - *HAVE THE MINIMUM EMBEDMENT INTO BEDROCK AS PROVIDED IN THE SIGN STRUCTURE FOUNDATION SUMMARY TABLE & DETAILS.*
8. *FOR SIGN STRUCTURE S01031 FOUNDATION, DRILLED SHAFT PAY LIMITS SHALL EXTEND FROM BOTTOM OF DRILLED SHAFT TO FINISHED GROUND ELEVATION. ALL CONCRETE AND REINFORCEMENT BELOW FINISHED GROUND SHALL BE PAID UNDER ITEM 606005 - DRILLED SHAFT, 72". ALL CONCRETE ABOVE FINISHED GROUND SHALL BE PAID UNDER ITEM 610009 - PORTLAND CEMENT CONCRETE MASONRY, CLASS B. ALL REINFORCEMENT ABOVE FINISHED GROUND SHALL BE PAID UNDER ITEM 611000 - BAR REINFORCEMENT.*
9. *MINIMUM LAP SPLICE FOR #11 BAR SHALL BE 6'-3".*

UNOFFICIAL WEBSITE COPY

ADDENDA / REVISIONS

NOT TO SCALE

CANTILEVER AND OVERHEAD SIGN STRUCTURES, I-95

CONTRACT	BRIDGE NO.	N/A
T201907002	DESIGNED BY: AMP	
COUNTY	CHECKED BY: JWS	
NEW CASTLE		

SIGN STRUCTURE FOUNDATION DETAILS

DT-04
SECTION
TY
SHEET NO.
75

8/13/2019
T:\Dover\Projects\425025.14\600_CADD\05_Official\DT04.dgn

BORING: WB-9 (SC1032) | **DATE DRILLED:** 3/26/17
STATION: 1321+11.44 | **OFFSET:** 73.80 | **ELEVATION:** XXX | **NORTHING:** 635338.830 | **EASTING:** 615932.531
COMMENTS: N/A

SAMPLE INFORMATION

NO.	DEPTH	BLOWS /6"	DESCRIPTION	CLASS /G.I.	REMARKS
1	1.0	5	MOIST MEDIUM DENSE BROWN SILTY COARSE TO FINE SAND W/SOME	A-1-B	HOT-MIX 3.5" STONE 8.5"
	2.0	6	FINE GRAVEL 12" RECOVERY		
2	2.0	5	MOIST MEDIUM DENSE BROWN SILTY FINE GRAVEL W/SOME COARSE TO	A-2-4(0)	
		9	FINE SAND AND CLAY.		
		11			
	4.0	7	16" RECOVERY		
3	4.0	6	MOIST MEDIUM DENSE BROWN CLAYEY COARSE SANDY FINE GRAVEL	A-2-4(0)	
		8	W/SOME FINE SAND AND SILT.		
		9			
	6.0	13	18" RECOVERY		
4	6.0	11	MOIST DENSE BROWN SILTY COARSE TO FINE SAND AND FINE GRAVEL.	A-1-B	
		19			
		21			
	8.0	24	2" RECOVERY		
5	8.0	6	MOIST STIFF BROWN CLAYEY FINE GRAVELLY SILT W/ SOME COARSE	A-4(1)	
		6	TO FINE SAND.		
		10			
	10.0	10	18" RECOVERY		
6	10.0	6	NO SIEVE ANALYSIS - INDICATION OF MOIST MEDIUM DENSE BROWN		
		13	CLAYEY SILT W/SOME FINE TO COARSE SAND.		
		15			
	12.0	16	5" RECOVERY		
7	12.0	6	MOIST MEDIUM DENSE BROWN CLAYEY COARSE SAND AND FINE GRAVEL	A-2-4(0)	
		7	W/SOME FINE SAND AND SILT.		
		7			
	14.0	8	21" RECOVERY		
8	14.0	9	MOIST MEDIUM DENSE BROWN CLAYEY COARSE SAND W/SOME FINE	A-2-4(0)	
		11	GRAVEL, FINE SAND AND SILT		
		7			
	16.0	7	24" RECOVERY		
9	16.0	7	MOIST MEDIUM DENSE BROWN CLAYEY FINE SAND AND FINE GRAVEL	A-2-4(0)	
		11	W/SOME COARSE SAND AND SILT.		
		15			
	18.0	7	22" RECOVERY		
10	18.0	10	MOIST HARD BROWN CLAYEY SILT W/SOME COARSE TO FINE SAND AND	A-4(1)	
		21	FINE GRAVEL.		
		24			
	20.0	16	20" RECOVERY		
11	24.0	4	WET HARD BROWN SILTY CLAY W/TRACE FINE TO COARSE SAND.	A-6(17)	
		28			
		10			
	26.0	11	22" RECOVERY		
12	28.0	4	SATURATED STIFF BROWN SILTY CLAY W/TRACE FINE TO COARSE SAND.	A-7-6(28)	
		5			
		6			
	30.0	5	23" RECOVERY		
13	34.0	3	SATURATED FIRM BROWN SILTY CLAY W/SOME COARSE TO FINE SAND.	A-7-6(14)	
		4			
		4			
	36.0	6	19" RECOVERY		
14	38.0	3	SATURATED FIRM BROWN SILTY CLAY W/TRACE FINE TO COARSE SAND.	A-7-5(41)	
		3			
		4			
	40.0	4	21" RECOVERY		
15	44.0	4	SATURATED STIFF BROWN SILTY CLAY W/SOME COARSE TO FINE SAND.	A-7-6(12)	
		4			
		6			
	46.0	5	24" RECOVERY		
16	48.0	3	SATURATED STIFF BROWN SILTY COARSE SANDY CLAY W/SOME FINE SAND.	A-7-6(11)	
		5			
		5			
	50.0	5	15" RECOVERY		
			END BORING		

NOTES:

1. *NORTHING AND EASTING COORDINATES ARE REFERENCED TO THE DELAWARE STATE PLANE COORDINATE SYSTEM (NAD 83/91).*
2. *ELEVATIONS ARE BASED OFF OF NAVD 88.*

UNOFFICIAL WEBSITE COPY

ADDENDA / REVISIONS

CANTILEVER AND OVERHEAD SIGN STRUCTURES, I-95

CONTRACT	BRIDGE NO.	N/A
T201907002	DESIGNED BY: AMP	
COUNTY		
NEW CASTLE	CHECKED BY: JWS	

SOIL BORING LOGS

BO-01
SECTION
TY
SHEET NO.
76

8/13/2019
T:\Dover\Projects\425025.14\600_CADD\05_Official\B001.dgn

BORING: WB-10 (SC1034) | **DATE DRILLED:** 3/26/17
STATION: 1324+65.81 | **OFFSET:** 76.00 | **ELEVATION:** XXX | **NORTHING:** 635651.261 | **EASTING:** 616099.775
COMMENTS: N/A

SAMPLE INFORMATION

NO.	DEPTH	BLOWS /6"	DESCRIPTION	CLASS /G.I.	REMARKS
1	1.0 2.0		MOIST BROWN CLAYEY FINE TO COARSE SAND W/ SOME FINE GRAVEL AND SILT. 12" RECOVERY	A-2-4(0)	HOT-MIX 4.5" STONE 7.5"
2	2.0 3.5	6 8 8 50/1	MOIST MEDIUM DENSE BROWN SILTY COARSE TO FINE SAND W/SOME FINE GRAVEL AND CLAY. 17" RECOVERY	A-1-B	
R-1	3.5 8.5		GRANITE 60" RECOVERY		RECOVERY 100% RQD 43%
R-2	8.5 13.5		GRANITE 60" RECOVERY		RECOVERY 100% RQD 95%
			END BORING		

BORING: WB-11 (SC1035) | **DATE DRILLED:** 4/3/17
STATION: 900+92.23 | **OFFSET:** 23.00 | **ELEVATION:** XXX | **NORTHING:** 636119.688 | **EASTING:** 616187.953
COMMENTS: N/A

SAMPLE INFORMATION

NO.	DEPTH	BLOWS /6"	DESCRIPTION	CLASS /G.I.	REMARKS
1	2.0 4.0	4 4 2 2	MOIST LOOSE BROWN FINE GRAVELLY COARSE SAND W/SOME FINE SAND AND SILT. 4" RECOVERY	A-1-B	HOT-MIX 2.5" CONCRETE 11.5"
2	4.0 6.0	2 2 1 1	NO SIEVE ANALYSIS - INDICATION OF WET VERY LOOSE BROWN FINE GRAVEL W/SOME FINE TO COARSE SAND AND SILT. 8" RECOVERY		
3	6.0 8.0	3 5 1 2	WET LOOSE BROWN FINE GRAVEL W/SOME COARSE TO FINE SAND AND SILT. 6" RECOVERY	A-1-A	
4	8.0 10.0	13 50/3	WET VERY DENSE BROWN COARSE TO FINE SAND AND FINE GRAVEL W/SOME SILT. 15" RECOVERY	A-1-B	
5	10.0 11.0	22 50/3	WET VERY DENSE BROWN FINE SANDY FINE GRAVEL W/SOME COARSE SAND AND SILT. 7" RECOVERY	A-1-B	
R-1	11.0 16.0		BLUE GRANITE 48" RECOVERY		RECOVERY 80% RQD 65%
R-2	16.0 21.0		BLUE GRANITE 60" RECOVERY		RECOVERY 100% RQD 100%
			END BORING		

BORING: WB-12 (SC1036) | **DATE DRILLED:** 3/28/17
STATION: 1336+63.37 | **OFFSET:** 61.50 | **ELEVATION:** XXX | **NORTHING:** 636717.324 | **EASTING:** 616645.549
COMMENTS: N/A

SAMPLE INFORMATION

NO.	DEPTH	BLOWS /6"	DESCRIPTION	CLASS /G.I.	REMARKS
1	2.0 4.0	13 11 16 22	MOIST MEDIUM DENSE BROWN COARSE TO FINE SAND AND FINE GRAVEL W/SOME SILT. 2" RECOVERY	A-1-B	HOT-MIX 7" STONE
2	4.0 5.0	13 11 50/3	WET HARD BROWN FINE SANDY SILT W/SOME COARSE SAND, TRACE OF FINE GRAVEL. 12" RECOVERY	A-4(0)	
R-1	5.0 10.0		BLUE GRANITE 60" RECOVERY		RECOVERY 100% RQD 52%
R-2	10.0 15.0		BLUE GRANITE 60" RECOVERY		RECOVERY 100% RQD 100%
			END BORING		

BORING: WB-13 (SC1037) | **DATE DRILLED:** 4/2/17
STATION: 1110+92.56 | **OFFSET:** 22.00 | **ELEVATION:** XXX | **NORTHING:** 636866.341 | **EASTING:** 616582.816
COMMENTS: N/A

SAMPLE INFORMATION

NO.	DEPTH	BLOWS /6"	DESCRIPTION	CLASS /G.I.	REMARKS
1	2.0 4.0	5 6 6 6	SATURATED STIFF BROWN SILTY CLAY W/SOME COARSE TO FINE SAND AND FINE GRAVEL. 19" RECOVERY	A-7-5(16)	HOT-MIX 3.5" CONCRETE 13.5"
2	4.0 6.0	2 2 5 7	SATURATED FIRM BROWN SILTY CLAY W/SOME FINE TO COARSE SAND. 18" RECOVERY	A-7-6(19)	
3	6.0 8.0	8 9 15 16	SATURATED VERY STIFF BROWN SILTY CLAY W/SOME COARSE TO FINE SAND, TRACE OF FINE GRAVEL. 17" RECOVERY	A-7-5(24)	
4	8.0 10.0	2 9 15 12	SATURATED MEDIUM DENSE GRAY CLAYEY FINE TO COARSE SAND W/SOME SILT. 16" RECOVERY	A-2-7(1)	
5	10.0 12.0	38 50/2	SATURATED VERY DENSE GRAY SILTY FINE TO COARSE SAND W/TRACE FINE GRAVEL. 13" RECOVERY	A-2-4(0)	
6	12.0 13.5	50/4	NO SIEVE ANALYSIS - INDICATION OF SATURATED VERY DENSE GRAY SILTY FINE TO COARSE SAND W/ SOME FINE GRAVEL. 3" RECOVERY		
R-1	13.5 18.5		BLUE GRANITE 60" RECOVERY		RECOVERY 100% RQD 73%
R-2	18.5 23.5		BLUE GRANITE 60" RECOVERY		RECOVERY 100% RQD 100%
			END BORING		

BORING: WB-14 (SC1038) | **DATE DRILLED:** 3/8/17
STATION: *STA. N/A* | **OFFSET:** *-32.62* | **ELEVATION:** XXX | **NORTHING:** 647129.261 | **EASTING:** 627795.575
COMMENTS: N/A

SAMPLE INFORMATION

NO.	DEPTH	BLOWS /6"	DESCRIPTION	CLASS /G.I.	REMARKS
1	2.0 4.0	8 9 7 8	WET STIFF BROWN CLAY W/SOME FINE TO COARSE SAND, FINE GRAVEL AND SILT. 14" RECOVERY	A-6(4)	HOT-MIX 12" STONE 12"
R-1	4.0 9.0		GRANITE 9" RECOVERY		RECOVERY 15% RQD 0%
R-2	9.0 14.0		GRANITE 25" RECOVERY		RECOVERY 42% RQD 22%
R-3	14.0 19.0		GRANITE 58" RECOVERY		RECOVERY 97% RQD 62%
R-4	19.0 21.0		GRANITE 7" RECOVERY		RECOVERY 32% RQD 32%
			END BORING		

NOTES:

1. *NORTHING AND EASTING COORDINATES ARE REFERENCED TO THE DELAWARE STATE PLANE COORDINATE SYSTEM (NAD 83/91).*
2. *ELEVATIONS ARE BASED OFF OF NAVD 88.*

UNOFFICIAL WEBSITE COPY

ADDENDA / REVISIONS

CANTILEVER AND OVERHEAD SIGN STRUCTURES, I-95

CONTRACT	BRIDGE NO.	N/A
T201907002	DESIGNED BY: AMP	
COUNTY		
NEW CASTLE	CHECKED BY: JWS	

SOIL BORING LOGS

BO-02
SECTION
TY
SHEET NO.
77

8/13/2019
T:\Dover\Projects\425025.14\600_CADD\05_Official\B002.dgn

BORING: WB-15 (SC1208) | **DATE DRILLED:** 3/13/17
STATION: 1311+73.40 | **OFFSET:** 67.21 | **ELEVATION:** XXX | **NORTHING:** 634586.998 | **EASTING:** 615528.673
COMMENTS: N/A

SAMPLE INFORMATION					
NO.	DEPTH	BLOWS /6"	DESCRIPTION	CLASS /G.I.	REMARKS
1	0.0	5	SATURATED STIFF BROWN COARSE TO FINE SANDY SILT W/TRACE	A-4(0)	
		6	FINE GRAVEL.		
		7			
	2.0	6	11" RECOVERY		
2	2.0	13	SATURATED MEDIUM DENSE BROWN COARSE SAND AND FINE GRAVEL	A-1-B	
		12	W/SOME FINE SAND AND SILT.		
		11			
	4.0	7	12" RECOVERY		
3	4.0	4	SATURATED LOOSE BROWN SILTY FINE SANDY FINE GRAVEL W/SOME	A-2-4(0)	
		5	COARSE SAND.		
		4			
	6.0	4	15" RECOVERY		
4	6.0	5	SATURATED STIFF BROWN FINE GRAVELLY CLAY W/ TRACE COARSE TO	A-7-6(3)	
		6	FINE SAND AND SILT.		
		6			
	8.0	5	20" RECOVERY		
5	8.0	5	SATURATED VERY STIFF BROWN SILTY CLAY W/SOME FINE TO COARSE	A-7-6(11)	
		6	SAND, TRACE OF FINE GRAVEL.		
		6			
	10.0	10	19" RECOVERY		
6	10.0	9	SATURATED VERY STIFF BROWN CLAY W/SOME FINE TO COARSE SAND,	A-7-6(14)	
		9	TRACE OF FINE GRAVEL.		
		12			
	12.0	11	20" RECOVERY		
7	12.0	9	SATURATED VERY STIFF BROWN FINE SANDY SILT W/ TRACE COARSE	A-4(0)	
		11	SAND AND FINE GRAVEL.		
		10			
	14.0	11	18" RECOVERY		
8	14.0	13	SATURATED HARD BROWN FINE SANDY SILT W/ TRACE COARSE SAND	A-4(0)	
		15	AND FINE GRAVEL.		
		16			
	16.0	13	19" RECOVERY		
9	16.0	13	SATURATED VERY STIFF BROWN FINE SANDY CLAY W/ SOME SILT,	A-7-5(8)	
		11	TRACE OF COARSE SAND AND FINE GRAVEL.		
		13			
	18.0	12	19" RECOVERY		
10	18.0	5	SATURATED STIFF BROWN FINE SANDY CLAY W/SOME SILT, TRACE	A-7-5(9)	
		6	OF COARSE SAND AND FINE GRAVEL.		
		8			
	20.0	8	20" RECOVERY		
11	24.0	9	SATURATED VERY STIFF BROWN FINE SANDY CLAY W/ SOME COARSE	A-7-5(11)	
		13	SAND AND SILT, TRACE OF FINE GRAVEL.		
		15			
	26.0	17	24" RECOVERY		
12	28.0	9	SATURATED MEDIUM DENSE BROWN CLAYEY FINE SAND AND FINE GRAVEL	A-2-7(2)	
		13	W/SOME COARSE SAND AND SILT.		
		17			
	30.0	22	22" RECOVERY		
13	34.0	11	SATURATED VERY STIFF BROWN FINE TO COARSE SANDY CLAY W/SOME	A-7-5(3)	
		13	SILT AND FINE GRAVEL.		
		12			
	36.0	15	23" RECOVERY		
14	38.0	24	SATURATED DENSE BROWN CLAYEY COARSE SAND AND FINE GRAVEL	A-2-7(1)	
		21	W/SOME FINE SAND AND SILT.		
		23			
	40.0	25	16" RECOVERY		
15	44.0	50/4	SATURATED VERY DENSE BROWN FINE GRAVEL W/ SOME FINE	A-1-B	
			TO COARSE SAND AND SILT.		
	46.0		4" RECOVERY		
16	48.0	50/3	SATURATED VERY DENSE BROWN FINE GRAVEL W/ SOME FINE TO	A-1-A	
			COARSE SAND AND SILT.		
	50.0		3" RECOVERY		
			END BORING		

BORING: WB-17 (SC1229) | **DATE DRILLED:** 3/9/17
STATION: 1337+52.62 | **OFFSET:** 122.96 | **ELEVATION:** XXX | **NORTHING:** 636767.595 | **EASTING:** 616741.543
COMMENTS: AUGER REFUSAL @ 4'. OBTAINED A SAMPLE FROM 14'-16' ROCK CORE FROM BOULDER. 26' RESUMED ROCK CORING. SAMPLE @

SAMPLE INFORMATION					
NO.	DEPTH	BLOWS /6"	DESCRIPTION	CLASS /G.I.	REMARKS
1	0.0	7	WET MEDIUM DENSE BROWN CLAYEY FINE GRAVEL W/SOME FINE TO	A-2-4(0)	
		9	COARSE SAND AND SILT.		
		14			
	2.0	16	20" RECOVERY		
2	2.0	8	WET MEDIUM DENSE BROWN CLAYEY FINE GRAVEL W/SOME COARSE TO	A-2-6(0)	
		9	FINE SAND AND SILT.		
		19			
	4.0	32	6" RECOVERY		
			ROCK CORING THROUGH BOULDERS.		
3	18.0	3	WET LOOSE BROWN COARSE TO FINE SAND W/SOME FINE GRAVEL,	A-1-B	
		4	TRACE OF SILT.		
		4			
	20.0	3	18" RECOVERY		
4	24.0	3	WET LOOSE BROWN COARSE TO FINE SAND W/SOME FINE GRAVEL,	A-1-B	
		5	TRACE OF SILT.		
		4			
	26.0	3	5" RECOVERY		
			ROCK CORING THROUGH BOULDERS.		
R-1	39.0		GRANITE		RECOVERY 50% RQD 23%
	44.0		30" RECOVERY		
			END BORING		

UNOFFICIAL WEBSITE COPY

NOTES:

1. *NORTHING AND EASTING COORDINATES ARE REFERENCED TO THE DELAWARE STATE PLANE COORDINATE SYSTEM (NAD 83/91).*
2. *ELEVATIONS ARE BASED OFF OF NAVD 88.*

ADDENDA / REVISIONS	

CANTILEVER AND OVERHEAD SIGN STRUCTURES, I-95

CONTRACT	BRIDGE NO.	N/A
T201907002	DESIGNED BY: AMP	
COUNTY		
NEW CASTLE	CHECKED BY: JWS	

SOIL BORING LOGS

BO-03
SECTION
TY
SHEET NO.
78

8/13/2019
T:\Dover\Projects\425025.14\600_CADD\05_Official\B003.dgn

BORING: WB-18 (SC1196) | **DATE DRILLED:** 3/23/17
STATION: 1200+92.11 | **OFFSET:** -12.95 | **ELEVATION:** XXX | **NORTHING:** 637121.322 | **EASTING:** 616928.227
COMMENTS: FROM 10'-50' SAMPLES OBTAINED FROM ROCK CORE BARREL.

SAMPLE INFORMATION					
NO.	DEPTH	BLOWS /6"	DESCRIPTION	CLASS /G.I.	REMARKS
1	0.0 2.0	1 2 3 3	NO SIEVE ANALYSIS - INDICATION OF WET FIRM BROWN SILT W/SOME FINE TO COARSE SAND AND FINE GRAVEL. 2" RECOVERY		
2	2.0 4.0	50/2	NO RECOVERY NR" RECOVERY		
3	4.0 6.0	4 5 3 3	WET FIRM BROWN FINE GRAVELLY SILT W/SOME COARSE TO FINE SAND. 14" RECOVERY	A-4(0)	
4	6.0 8.0	2 2 2 2	WET SOFT BROWN CLAYEY SILT W/TRACE FINE TO COARSE SAND. 16" RECOVERY	A-4(7)	
5	8.0 10.0	16 28 50/2	WET VERY DENSE BROWN SILTY COARSE SANDY FINE GRAVEL W/SOME FINE SAND. 11" RECOVERY	A-1-B	
R-1	10.0 15.0		BROWN FRACTURED ROCK 18" RECOVERY		
R-2	15.0 20.0		BROWN FRACTURED ROCK 11" RECOVERY		
R-3	20.0 25.0		BROWN FRACTURED ROCK 15" RECOVERY		
R-4	25.0 30.0		NO RECOVERY NR" RECOVERY		
R-5	30.0 35.0		BROWN FRACTURED ROCK 6" RECOVERY		
R-6	35.0 40.0		BROWN FRACTURED ROCK 6" RECOVERY		
R-7	40.0 45.0		BROWN FRACTURED ROCK 6" RECOVERY		
R-8	45.0 50.0		BROWN FRACTURED ROCK 20" RECOVERY		
			END BORING		

BORING: WB-19 (SC1209) | **DATE DRILLED:** 3/20/17
STATION: 303+02.43 | **OFFSET:** 53.90 | **ELEVATION:** XXX | **NORTHING:** XXX | **EASTING:** XXX
COMMENTS: N/A

SAMPLE INFORMATION					
NO.	DEPTH	BLOWS /6"	DESCRIPTION	CLASS /G.I.	REMARKS
1	0.0 2.0	3 4 4 5	WET FIRM GRAY SILTY CLAY W/SOME FINE TO COARSE SAND, TRACE OF FINE GRAVEL. 11" RECOVERY	A-6(5)	
2	2.0 4.0	1 1 1 1	WET SOFT GRAY SILT W/SOME FINE TO COARSE SAND. 1" RECOVERY	A-4(0)	
3	4.0 6.0	4 4 4 4	WET FIRM BROWN COARSE SANDY CLAY W/SOME FINE SAND, FINE GRAVEL AND SILT. 16" RECOVERY	A-7-6(6)	
4	6.0 8.0	6 6 6 8	WET STIFF GRAY COARSE SANDY CLAY W/SOME FINE GRAVEL AND SILT, TRACE OF FINE SAND. 21" RECOVERY	A-7-5(6)	
5	8.0 10.0	7 8 9 16	WET VERY STIFF GRAY CLAYEY FINE TO COARSE SANDY SILT. 15" RECOVERY	A-4(2)	
6	10.0 12.0	11 16 17 22	WET HARD GRAY COARSE TO FINE SANDY CLAY W/ SOME SILT. 13" RECOVERY	A-7-6(7)	
7	12.0 14.0	16 17 21 20	WET HARD GRAY FINE TO COARSE SANDY CLAY W/ SOME SILT. 16" RECOVERY	A-7-6(8)	
8	14.0 16.0	14 16 28 31	WET HARD GRAY FINE TO COARSE SANDY CLAY W/ SOME SILT. 16" RECOVERY	A-6(4)	
9	16.0 18.0	50/4	WET DENSE GRAY SILTY FINE TO COARSE SAND. 6" RECOVERY	A-2-4(0)	
10	18.0 20.0	14 17 21 34	WET DENSE GRAY CLAYEY FINE TO COARSE SAND W/ SOME SILT. 23" RECOVERY	A-2-7(1)	
11	24.0 26.0	28 50/3	WET VERY DENSE GRAY CLAYEY FINE TO COARSE SAND W/SOME FINE GRAVEL AND SILT. 8" RECOVERY	A-2-6(1)	
12	28.0 30.0		NO RECOVERY NR" RECOVERY		
R-1	30.0 35.0		GRANITE 37" RECOVERY		RECOVERY 62% RQD 8%
R-2	35.0 40.0		GRANITE 60" RECOVERY		RECOVERY 100% RQD 76%
			END BORING		

NOTES:

1. *NORTHING AND EASTING COORDINATES ARE REFERENCED TO THE DELAWARE STATE PLANE COORDINATE SYSTEM (NAD 83/91).*
2. *ELEVATIONS ARE BASED OFF OF NAVD 88.*

UNOFFICIAL WEBSITE COPY

ADDENDA / REVISIONS

CANTILEVER AND OVERHEAD SIGN STRUCTURES, I-95

CONTRACT	BRIDGE NO.	N/A
T201907002	DESIGNED BY: AMP	
COUNTY	CHECKED BY: JWS	
NEW CASTLE		

SOIL BORING LOGS

BO-04
SECTION
TY
SHEET NO.
79

8/13/2019
T:\Dover\Projects\425025.14\600_CADD\05_Official\B004.dgn

BORING: WB-3 (S01194-A) | **DATE DRILLED:** 3/6/17
STATION: 810+39.23 | **OFFSET:** -38.30 | **ELEVATION:** XXX | **NORTHING:** 633681.778 | **EASTING:** 616741.407
COMMENTS: N/A

SAMPLE INFORMATION					
NO.	DEPTH	BLOWS /6"	DESCRIPTION	CLASS /G.I.	REMARKS
1	1.0		WET BROWN SILTY FINE GRAVEL W/SOME COARSE TO FINE SAND.	A-1-B	HOT-MIX 12"
	2.0		12" RECOVERY		
2	2.0	13	WET DENSE BROWN CLAYEY COARSE SANDY FINE GRAVEL W/SOME FINE SAND AND SILT.	A-2-6(0)	
		19			
		20			
	4.0	7	14" RECOVERY		
3	4.0	5	SATURATED STIFF BROWN FINE TO COARSE SANDY CLAY W/SOME SILT.	A-7-6(3)	
		6			
		7			
	6.0	6	18" RECOVERY		
4	6.0	2	SATURATED FIRM BROWN FINE TO COARSE SANDY SILT.	A-4(0)	
		2			
		3			
	8.0	2	3" RECOVERY		
5	8.0	3	SATURATED STIFF BROWN COARSE SANDY CLAY W/ SOME FINE SAND, FINE GRAVEL AND SILT.	A-7-5(12)	
		3			
		4			
	10.0	3	7" RECOVERY		
6	10.0	5	SATURATED STIFF BROWN SILTY CLAY W/SOME COARSE TO FINE SAND, TRACE OF FINE GRAVEL.	A-7-5(25)	
		6			
		5			
	12.0	5	14" RECOVERY		
7	12.0	9	SATURATED VERY STIFF BROWN SILTY CLAY W/TRACE FINE TO COARSE SAND.	A-7-5(47)	
		11			
		9			
	14.0	10	20" RECOVERY		
			END BORING		

BORING: WB-4 (S01194-B) | **DATE DRILLED:** 3/7/17
STATION: 810+39.23 | **OFFSET:** 28.50 | **ELEVATION:** XXX | **NORTHING:** 633740.814 | **EASTING:** 616772.662
COMMENTS: N/A

SAMPLE INFORMATION					
NO.	DEPTH	BLOWS /6"	DESCRIPTION	CLASS /G.I.	REMARKS
1	2.0	8	WET MEDIUM DENSE GRAY CLAYEY FINE GRAVEL W/ SOME FINE TO COARSE SAND AND SILT.	A-2-4(0)	HOT-MIX STONE BASE
		9			
		3			
	4.0	3	13" RECOVERY		
2	4.0	4	SATURATED FIRM BROWN SILTY CLAY W/SOME FINE SAND, TRACE OF COARSE SAND AND FINE GRAVEL.	A-7-5(16)	
		4			
		4			
	6.0	4	17" RECOVERY		
3	6.0	5	SATURATED FIRM BROWN SILTY CLAY W/SOME COARSE TO FINE SAND.	A-7-6(20)	
		4			
		3			
	8.0	5	23" RECOVERY		
4	8.0	3	SATURATED FIRM BROWN SILTY CLAY W/SOME FINE SAND, TRACE OF COARSE SAND.	A-7-6(35)	
		4			
		4			
	10.0	5	24" RECOVERY		
5	10.0	5	SATURATED STIFF BROWN SILTY CLAY W/SOME FINE SAND, TRACE OF COARSE SAND.	A-7-6(37)	
		4			
		5			
	12.0	5	19" RECOVERY		
6	12.0	5	SATURATED STIFF BROWN SILTY CLAY W/SOME FINE TO COARSE SAND.	A-7-6(27)	
		6			
		9			
	14.0	9	19" RECOVERY		
7	14.0	9	SATURATED VERY STIFF BROWN SILTY CLAY W/SOME COARSE SAND, TRACE OF FINE SAND.	A-7-6(19)	
		10			
		8			
	16.0	9	21" RECOVERY		
8	16.0	12	SATURATED VERY STIFF BROWN SILTY CLAY W/SOME COARSE TO FINE SAND.	A-7-6(17)	
		14			
		11			
	18.0	13	18" RECOVERY		
9	18.0	7	SATURATED VERY STIFF BROWN SILTY FINE TO COARSE SANDY CLAY.	A-7-6(14)	
		8			
		9			
	20.0	9	22" RECOVERY		
10	24.0	16	SATURATED HARD GRAY FINE TO COARSE SANDY CLAY W/SOME SILT.	A-6(2)	
		19			
		29			
	26.0	31	20" RECOVERY		
11	28.0	5	SATURATED STIFF GRAY FINE SANDY CLAY W/ SOME SILT, TRACE OF COARSE SAND.	A-7-5(8)	
		6			
		9			
	30.0	15	23" RECOVERY		
12	34.0	9	SATURATED VERY STIFF GRAY FINE TO COARSE SANDY CLAY W/SOME SILT.	A-7-5(3)	
		13			
		11			
	36.0	11	23" RECOVERY		
13	38.0	11	SATURATED VERY STIFF GRAY FINE SANDY CLAY W/ SOME COARSE SAND AND SILT.	A-7-5(9)	
		10			
		10			
	40.0	13	23" RECOVERY		
14	44.0	16	SATURATED VERY STIFF GRAY FINE SANDY CLAY W/ SOME COARSE SAND AND SILT.	A-7-5(11)	
		13			
		15			
	46.0	13	21" RECOVERY		
15	48.0	11	SATURATED VERY STIFF GRAY SILTY FINE SANDY CLAY W/TRACE COARSE SAND.	A-7-5(14)	
		13			
		11			
	50.0	12	15" RECOVERY		
			END BORING		

NOTES:

1. *NORTHING AND EASTING COORDINATES ARE REFERENCED TO THE DELAWARE STATE PLANE COORDINATE SYSTEM (NAD 83/91).*
2. *ELEVATIONS ARE BASED OFF OF NAVD 88.*

UNOFFICIAL WEBSITE COPY

8/13/2019
T:\Dover\Projects\425025.14\600_CADD\05_Official\B005.dgn

ADDENDA / REVISIONS	

CANTILEVER AND OVERHEAD SIGN STRUCTURES, I-95

CONTRACT	BRIDGE NO.	N/A
T201907002	DESIGNED BY: AMP	
COUNTY		
NEW CASTLE	CHECKED BY: JWS	

SOIL BORING LOGS

B0-05
SECTION
TY
SHEET NO.
80

BORING: WB-1 (S01031 N)			DATE DRILLED: 3/2/2017		
STATION: 1285+69.90		OFFSET: 59.71	ELEVATION: XXX	NORTHING: 632114.745	EASTING: 614863.991
COMMENTS: N/A					

SAMPLE INFORMATION

NO.	DEPTH	BLOWS /6"	DESCRIPTION	CLASS /G.I.	REMARKS
1	0.0 2.0	10 16 11 18	MOIST MEDIUM DENSE GRAY SILTY FINE GRAVEL W/ SOME FINE TO COARSE SAND. 20" RECOVERY	A-1-B	
2	2.0 4.0	5 8 10 8	NO SIEVE ANALYSIS - INDICATION OF MOIST MEDIUM DENSE GRAY SILTY FINE TO COARSE SAND W/SOME FINE GRAVEL. 8" RECOVERY	A-1-B	
3	4.0 6.0	16 21 20 28	WET DENSE GRAY SILTY COARSE TO FINE SAND AND FINE GRAVEL. 16" RECOVERY	A-1-B	
4	6.0 8.0	14 18 21 19	WET DENSE GRAY FINE GRAVELLY COARSE SAND W/ SOME FINE SAND AND SILT. 7" RECOVERY	A-1-B	
5	8.0 10.0	8 11 24 31	WET DENSE GRAY FINE GRAVEL AND COARSE SAND W/SOME FINE SAND, TRACE OF SILT. 15" RECOVERY	A-1-B	
6	10.0 12.0	18 15 10 6	WET MEDIUM DENSE GRAY COARSE TO FINE SAND AND FINE GRAVEL W/SOME SILT. 18" RECOVERY	A-1-B	
7	12.0 14.0	2 3 3 2	SATURATED FIRM GRAY SILT W/SOME COARSE SAND, TRACE OF FINE SAND. 15" RECOVERY	A-5(7)	
U-1	14.0 16.0		22" RECOVERY		SHELBY TUBE - PRESS SAMPLE
8	16.0 18.0	WH WH 1 2	SATURATED SOFT GRAY ORGANIC SILT W/SOME COARSE SAND, TRACE OF FINE SAND. 21" RECOVERY	A-5(12)	
9	18.0 20.0	1 1 1 1	SATURATED SOFT GRAY ORGANIC SILT W/TRACE COARSE TO FINE SAND. 24" RECOVERY	A-5(10)	
10	24.0 26.0	1 2 1 2	SATURATED SOFT GRAY ORGANIC SILT W/TRACE COARSE TO FINE SAND. 24" RECOVERY	A-5(10)	
11	28.0 30.0	8 9 14 10	SATURATED VERY STIFF BROWN FINE TO COARSE SANDY CLAY W/SOME SILT. 23" RECOVERY	A-7-5(4)	
12	34.0 36.0	9 11 14 16	SATURATED MEDIUM DENSE BROWN CLAYEY FINE TO COARSE SAND W/SOME SILT. 14 RECOVERY	A-2-5(0)	
13	38.0 40.0	13 15 11 14	SATURATED HARD BROWN FINE TO COARSE SANDY CLAY W/SOME SILT. 17"RECOVERY	A-7-5(4)	
14	44.0 46.0	16 13 12 11	SATURATED STIFF BROWN CLAYEY FINE SANDY SILT W/ SOME COARSE SAND, TRACE OF FINE GRAVEL. 16" RECOVERY	A-5(2)	
15	48.0 50.0	13 11 10 11	SATURATED VERY STIFF BROWN COARSE TO FINE SANDY CLAY W/SOME SILT. 15" RECOVERY	A-7-5(3)	
			END BORING		

UNOFFICIAL WEBSITE COPY

NOTES:

1. *NORTHING AND EASTING COORDINATES ARE REFERENCED TO THE DELAWARE STATE PLANE COORDINATE SYSTEM (NAD 83/91).*
2. *ELEVATIONS ARE BASED OFF OF NAVD 88.*

ADDENDA / REVISIONS	

CANTILEVER AND OVERHEAD SIGN STRUCTURES, I-95

CONTRACT	BRIDGE NO.	N/A
T201907002	DESIGNED BY: AMP	
COUNTY		
NEW CASTLE	CHECKED BY: JWS	

SOIL BORING LOGS

BO-06
SECTION
TY
SHEET NO.
81

GENERAL MOT NOTES

1. AMERICAN TRAFFIC SAFETY SERVICES ASSOCIATION (ATSSA) CERTIFIED TRAFFIC CONTROL SUPERVISOR REQUIREMENT FOR THIS PROJECT.

( )	THE CONTRACTOR SHALL NOT BE REQUIRED TO HAVE AN ATSSA SUPERVISOR ASSIGNED TO THIS PROJECT.
(X)	THE CONTRACTOR SHALL HAVE AN ATSSA SUPERVISOR ASSIGNED TO THIS PROJECT. THE CONTRACTOR'S GENERAL SUPERINTENDENT FOR THIS PROJECT OR ANOTHER ATSSA CERTIFIED MEMBER OF THE CONTRACTOR'S PROJECT STAFF MAY BE THE ATSSA SUPERVISOR. PAYMENT FOR ATSSA SUPERVISOR IS INCIDENTAL TO ITEM 801000.

2. ON ALL INTERSECTING STREETS APPROACHING THE WORK AREA, "ROAD WORK AHEAD" PERMANENT SIGNS SHALL BE PLACED AS SHOWN ON THESE PLANS OR AS DIRECTED BY THE ENGINEER. AN "END ROAD WORK" SIGN SHALL BE PLACED ACROSS THE STREET FROM THE "ROAD WORK AHEAD." SIGN, VISIBLE TO TRAFFIC OPERATING THE WORK ZONE.

3. THIS PROJECT IS CONSIDERED A SIGNIFICANT PROJECT AS DEFINED BY DELDOT'S WORK ZONE MOBILITY PROCEDURES AND GUIDELINES. A MODIFIED TYPE B TRANSPORATATION MANAGEMENT PLAN (TMP) HAS BEEN PREPARED AND IS AVAILABLE FOR VIEWING BY CONTACTING THE DEPARTMENT'S SAFETY PROGRAMS MANAGER AT (302)659-4060.

4. MAINTENANCE OF TRAFFIC DURING LANE CLOSURES SHALL CONFORM TO TYPICAL APPLICATION TA-21, TA-21A, TA-23, TA-33, TA-35H, TA-37, TA-42, TA-43, AND TA-44 OF THE DELAWARE MUTCD.

5. ROLLING ROAD BLOCK OPERATIONS IN ACCORDANCE WITH DELDOT MUTCD STANDARD TYPICAL APPLICATION TA-35H SHALL BE RESTRICTED TO NIGHTTIME HOURS ONLY.

I-95 - ALLOWABLE SINGLE LANE CLOSURE HOURS

	12:00 AM	1:00 AM	2:00 AM	3:00 AM	4:00 AM	5:00 AM	6:00 AM	7:00 AM	8:00 AM	9:00 AM	10:00 AM	11:00 AM	12:00 PM	1:00 PM	2:00 PM	3:00 PM	4:00 PM	5:00 PM	6:00 PM	7:00 PM	8:00 PM	9:00 PM	10:00 PM	11:00 PM
SUNDAY																						■	■	■
MONDAY	■	■	■	■	■	■																■	■	■
TUESDAY	■	■	■	■	■	■																■	■	■
WEDNESDAY	■	■	■	■	■	■																■	■	■
THURSDAY	■	■	■	■	■	■																■	■	■
FRIDAY	■	■	■	■	■	■																		
SATURDAY																								

MARTIN LUTHER KING JR. BLVD., N. JACKSON ST., W. 2ND ST., W. 9TH ST. - ALLOWABLE SINGLE LANE CLOSURE HOURS

	12:00 AM	1:00 AM	2:00 AM	3:00 AM	4:00 AM	5:00 AM	6:00 AM	7:00 AM	8:00 AM	9:00 AM	10:00 AM	11:00 AM	12:00 PM	1:00 PM	2:00 PM	3:00 PM	4:00 PM	5:00 PM	6:00 PM	7:00 PM	8:00 PM	9:00 PM	10:00 PM	11:00 PM
SUNDAY																								
MONDAY	■	■	■	■	■	■				■	■	■	■	■	■							■	■	■
TUESDAY	■	■	■	■	■	■				■	■	■	■	■	■							■	■	■
WEDNESDAY	■	■	■	■	■	■				■	■	■	■	■	■							■	■	■
THURSDAY	■	■	■	■	■	■				■	■	■	■	■	■							■	■	■
FRIDAY	■	■	■	■	■	■				■	■	■	■	■	■									
SATURDAY																								

LEGEND:

■ LANE CLOSED □ LANE OPEN

GENERAL EROSION AND SEDIMENT CONTROL NOTES

1. THE SEDIMENT AND STORMWATER MANAGEMENT PLANS HAVE BEEN APPROVED BY DELDOT'S STORMWATER ENGINEER UNDER DELDOT'S DELEGATED AUTHORITY. THE SEDIMENT AND STORMWATER MANAGEMENT PLANS ARE VALID FOR A FIVE YEAR PERIOD, BEGINNING ON THE DATE THE STORMWATER ENGINEER SIGNED THE CONSTRUCTION TITLE SHEET. IF THE FINAL ACCEPTANCE OF THE PROJECT IS ANTICIPATED TO EXTEND BEYOND THE FIVE YEARS, THE CONTRACTOR WILL INFORM THE ENGINEER THREE MONTHS PRIOR TO THE EXPIRATION OF THE APPROVED SEDIMENT AND STORMWATER MANAGEMENT PLANS. THE STORMWATER ENGINEER WILL REVIEW THE CURRENT SEDIMENT AND STORMWATER MANAGEMENT PLAN AND ISSUE AN EXTENSION WITH ANY APPROPRIATE MODIFICATIONS.

2.

EROSION POTENTIAL FOR THIS PROJECT	CONTRACTOR ESC SUPERVISOR REQUIREMENT
(X) INSIGNIFICANT	NONE
( ) MINOR	CONTRACTOR TRAINING PROGRAM, AS DEFINED IN SECTION 6.2 OF THE DELAWARE SEDIMENT AND STORMWATER REGULATIONS.
( ) MAJOR	CERTIFIED CONSTRUCTION REVIEWER (CCR), AS DEFINED IN SECTION 6.3 OF THE DELAWARE SEDIMENT AND STORMWATER REGULATIONS.

3. THE DISTURBED AREA FOR THIS PROJECT IS 0.00 ACRES.

4. AFTER CONSTRUCTION, AREAS IN THE VICINITY OF THE DRILLED SHAFTS ARE TO BE COVERED WITH TOPSOIL, SEEDED AND MULCHED, AND RESTORED TO THEIR ORIGINAL CONDITION.

EROSION & SEDIMENT CONTROL	
CFL	COMPOST FILTER LOG
SF	COMPOST FILTER LOG / LENGTH
DWBAG	DEWATERING BAG
DWB	DEWATERING BASIN
ED	EARTH DIKE
	INLET SEDIMENT CONTROL
	PERIMETER DIKE/SWALE
PST	PORTABLE SEDIMENT TANK
SBD	SANDBAG DIKE
SB	SANDBAG DIVERSION
	STONE CHECK DAM
SCE	STABILIZED CONSTRUCTION ENTRANCE
SF	SILT FENCE / LENGTH
SF	SILT FENCE
RSF	REINFORCED SILT FENCE / LENGTH
RSF	REINFORCED SILT FENCE
SSF	SUPER SILT FENCE / LENGTH
SSF	SUPER SILT FENCE
SP	SUMP PIT
SF	SEDIMENT TRAP / NUMBER
ST	SEDIMENT TRAP
ST	SEDIMENT TRAP WITH INLET AS OUTLET
ST	SEDIMENT TRAP PIPE OUTLET
SW	STILLING WELL
	TEMPORARY SWALE
TSD	TEMPORARY SLOPE DRAIN
T	TURBIDITY CURTAIN / LENGTH
T	TURBIDITY CURTAIN

CONSTRUCTION PHASING & M.O.T	
	BARRICADE, TYPE 3
	CONCRETE SAFETY BARRIER - PORTABLE
CSF	CONSTRUCTION SAFETY FENCE / LENGTH
CSF	CONSTRUCTION SAFETY FENCE
	CONSTRUCTION WARNING SIGN LOCATION
END ROAD WORK	CONSTRUCTION WARNING SIGN
	CRASH CUSHION ARRAY
	DRUM - TRAFFIC CONTROL
	FLAGGER LOCATION
	PHASING TRAFFIC FLOW ARROW
	TEMPORARY CONSTRUCTION
	TEMPORARY PAVEMENT MARKING ARROW
	TRUCK WITH MOUNTED ATTENUATOR
	WORK AREA - ACTIVE PHASE

UNOFFICIAL WEBSITE COPY

8/13/2019
T:\Dover\Projects\425025.14\600_CADD\05_Official\CS001.dgn

ADDENDA / REVISIONS

CANTILEVER AND OVERHEAD SIGN STRUCTURES, I-95

CONTRACT	BRIDGE NO.	N/A
T201907002	DESIGNED BY: JWS	
COUNTY		
NEW CASTLE	CHECKED BY: RMB	

CONSTRUCTION PHASING, M.O.T., AND EROSION CONTROL PLAN - NOTES

CS-1A

SECTION TY

SHEET NO. 82

SEQUENCE OF CONSTRUCTION

SIGN STRUCTURE S01031:

1. PERFORM EXCAVATION FOR DRILLED SHAFT TO THE DIMENSIONS AND ELEVATION SHOWN IN THE PLANS.
2. PERFORM REMAINING CONSTRUCTION ACTIVITY IN WORK AREA AS PER PLANS, INCLUDING PLACING NEW SIGN STRUCTURE S01031 AND REMOVING EXISTING SIGN STRUCTURE S01031.
3. INSTALLATION OF PROPOSED SIGN STRUCTURE S01031 AND REMOVAL OF EXISTING SIGN STRUCTURE S01031 SHALL BE RESTRICTED TO NIGHTTIME HOURS ONLY. ROLLING ROAD BLOCKS IN ACCORDANCE WITH DELDOT MUTCD STANDARD TYPICAL APPLICATION TA-35H SHALL BE USED. THE CONTRACTOR SHALL CONTACT DELDOT TRAFFIC TO COORDINATE THE DURATION AND WORK HOUR RESTRICTIONS FOR THE ROLLING ROAD BLOCKS.
4. EXISTING SIGN STRUCTURE S01031 MAY NOT BE REMOVED UNTIL AFTER THE NEW REPLACEMENT SIGN STRUCTURE S01031 IS INSTALLED AND ACCEPTED, UNLESS NOTED ON THE PLANS OR OTHERWISE APPROVED BY THE ENGINEER. INSTALL TEMPORARY SIGNS WHERE NEW SIGN STRUCTURES BLOCK THE VIEW OF EXISTING SIGN STRUCTURES.
5. COMPLETE ALL REMAINING WORK INCLUDING FULL RESTORATION OF AREAS TO ITS ORIGINAL CONDITIONS.

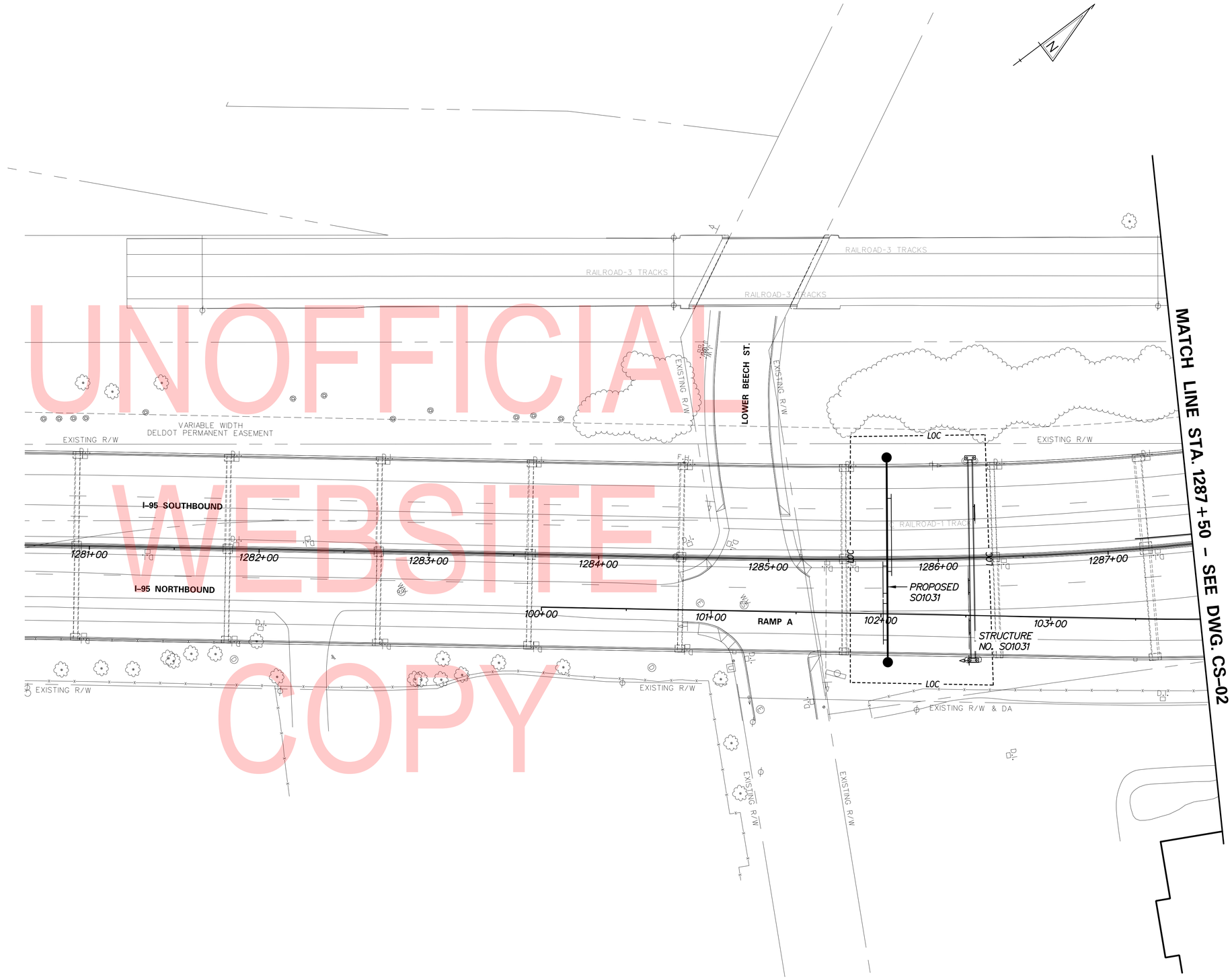

UNOFFICIAL WEBSITE COPY

ADDENDA / REVISIONS	

SCALE
0 30 60 90
FEET

CANTILEVER AND OVERHEAD SIGN STRUCTURES, I-95

CONTRACT	BRIDGE NO.	N/A
T201907002	DESIGNED BY: JWS	
COUNTY	CHECKED BY: RMB	
NEW CASTLE		

CONSTRUCTION PHASING, M.O.T., AND EROSION CONTROL PLAN

CS-01
SECTION
TY
SHEET NO.
83

8/13/2019
T:\Dover\Projects\425025.14.600_CADD\05_Official\CS01.dgn

SEQUENCE OF CONSTRUCTION

SIGN STRUCTURE S01032:

1. REMOVAL OF EXISTING S01032 SIGN PANELS SHALL BE RESTRICTED TO NIGHTTIME HOURS ONLY. ROLLING ROAD BLOCKS IN ACCORDANCE WITH DELDOT MUTCD STANDARD TYPICAL APPLICATION TA-35H SHALL BE USED. THE CONTRACTOR SHALL CONTACT DELDOT TRAFFIC TO COORDINATE THE DURATION AND WORK HOUR RESTRICTIONS FOR THE ROLLING ROAD BLOCKS.
2. EXISTING S01032 SIGN PANELS MAY NOT BE REMOVED UNTIL AFTER THE NEW REPLACEMENT SIGN STRUCTURE S01031 (SEE DWG. CS-01) IS INSTALLED AND ACCEPTED, UNLESS OTHERWISE APPROVED BY THE ENGINEER.

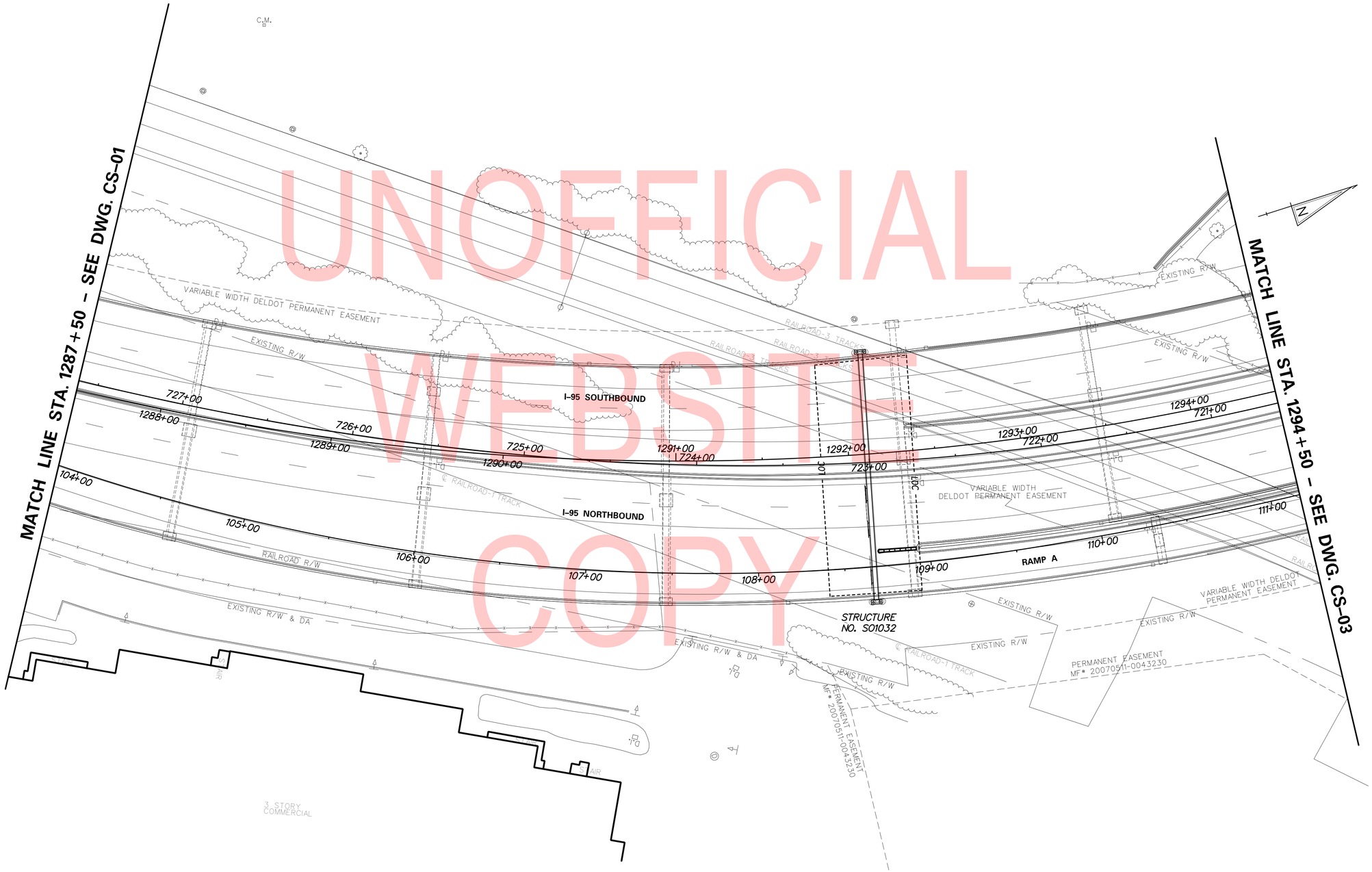

UNOFFICIAL WEBSITE COPY

ADDENDA / REVISIONS	

SCALE: 0 30 60 90 FEET

CANTILEVER AND OVERHEAD SIGN STRUCTURES, I-95

CONTRACT	BRIDGE NO.	N/A
T201907002	DESIGNED BY: JWS	
COUNTY		
NEW CASTLE	CHECKED BY: RMB	

CONSTRUCTION PHASING, M.O.T., AND EROSION CONTROL PLAN

CS-02
SECTION
TY
SHEET NO.
84

8/13/2019
T:\Dover\Projects\425025.14\600_CADD\05_Official\CS02.dgn

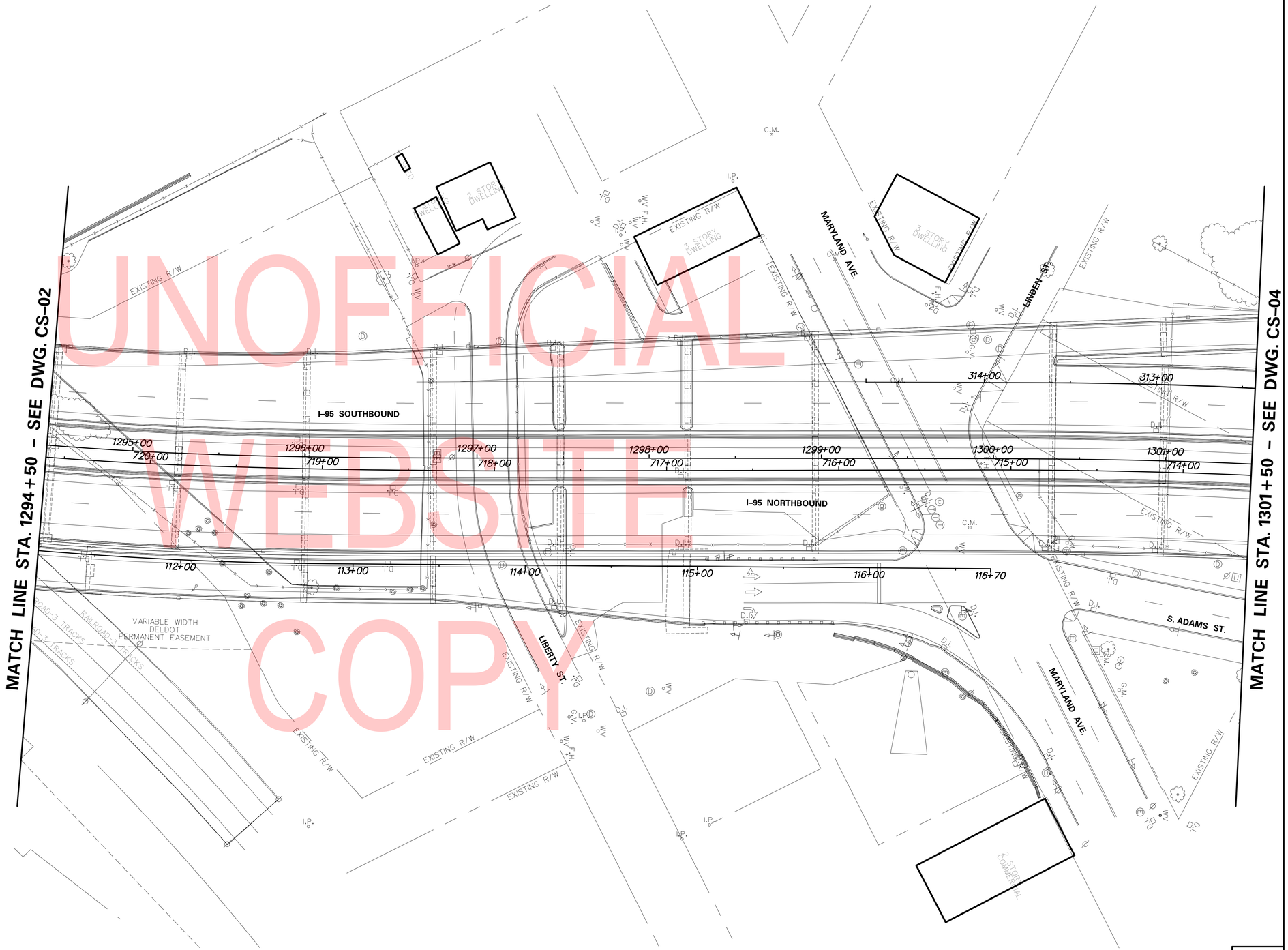

UNOFFICIAL WEBSITE COPY

ADDENDA / REVISIONS

SCALE
0 30 60 90
FEET

CANTILEVER AND OVERHEAD SIGN STRUCTURES, I–95

CONTRACT	BRIDGE NO.	N/A
T201907002	DESIGNED BY: JWS	
COUNTY		
NEW CASTLE	CHECKED BY: RMB	

CONSTRUCTION PHASING, M.O.T., AND EROSION CONTROL PLAN

CS-03
SECTION
TY
SHEET NO.
85

8/13/2019
T:\Dover\Projects\425025.14\600_CADD\05_Official\CS03.dgn

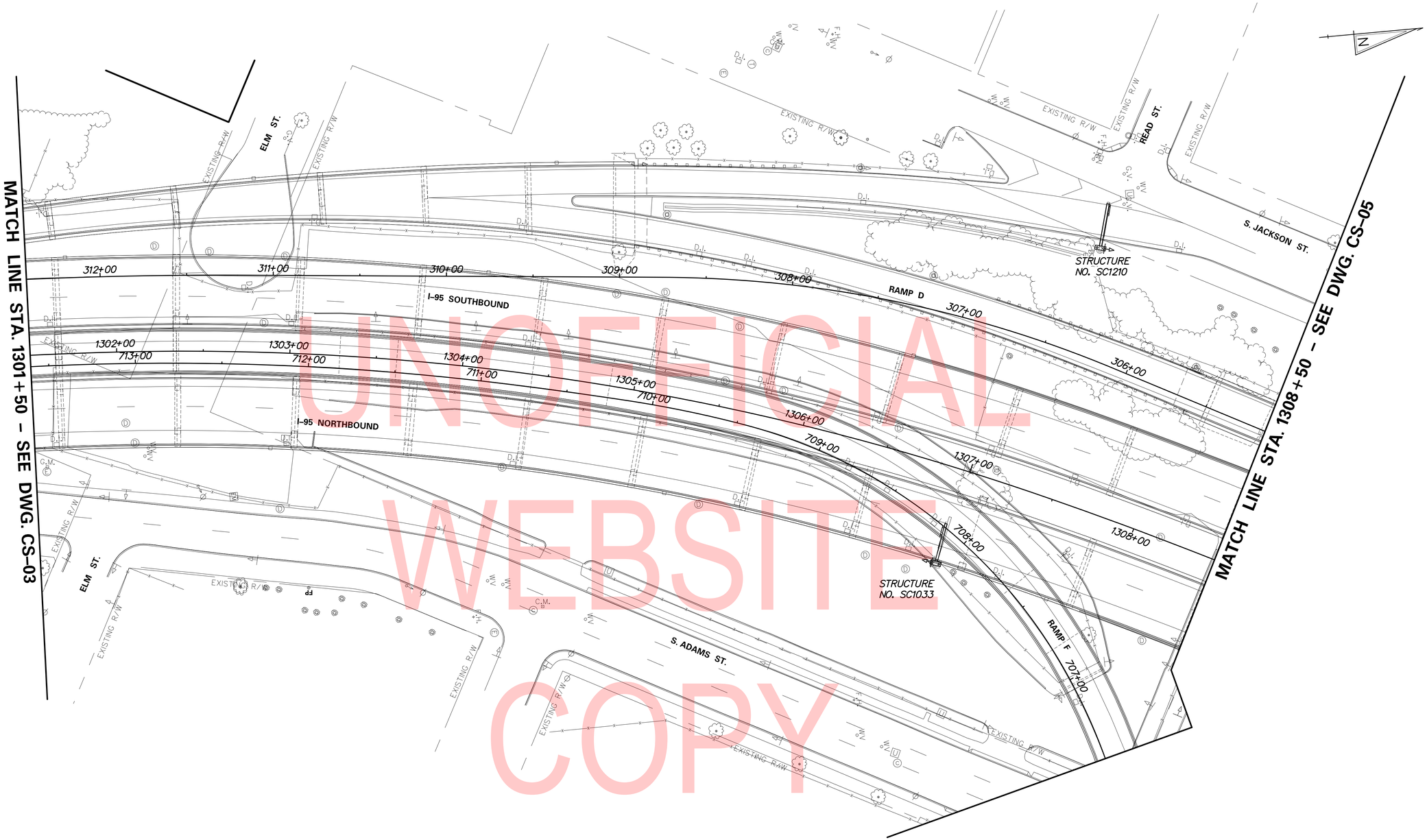

UNOFFICIAL WEBSITE COPY

ADDENDA / REVISIONS	

SCALE
0 30 60 90
FEET

CANTILEVER AND OVERHEAD SIGN STRUCTURES, I-95

CONTRACT	BRIDGE NO.	N/A
T201907002	DESIGNED BY: JWS	
COUNTY		
NEW CASTLE	CHECKED BY: RMB	

CONSTRUCTION PHASING, M.O.T., AND EROSION CONTROL PLAN

CS-04
SECTION
TY
SHEET NO.
86

8/13/2019
T:\Dover\Projects\425025.14\600_CADD\05_Official\CS04.dgn

SEQUENCE OF CONSTRUCTION

SIGN STRUCTURE SC1208:

1. INSTALL MOT DEVICES IN ACCORDANCE WITH DELDOT MUTCD STANDARD TYPICAL APPLICATION TA-23 FOR THE LEFT LANE CLOSURE ON W. 2ND STREET.
2. PERFORM EXCAVATION FOR DRILLED SHAFT TO THE DIMENSIONS AND ELEVATION SHOWN IN THE PLANS.
3. PERFORM REMAINING CONSTRUCTION ACTIVITY IN WORK AREA AS PER PLANS, INCLUDING PLACING NEW SIGN STRUCTURE SC1208.
4. INSTALLATION OF PROPOSED SIGN STRUCTURE SC1208 SHALL BE RESTRICTED TO NIGHTTIME HOURS ONLY. LEFT LANE CLOSURE IN ACCORDANCE WITH DELDOT MUTCD STANDARD TYPICAL APPLICATION TA-23 SHALL BE USED.
5. COMPLETE ALL REMAINING WORK INCLUDING FULL RESTORATION OF AREAS TO ITS ORIGINAL CONDITIONS.
6. REMOVE ALL MOT DEVICES INCLUDING TEMPORARY SIGNS AND REOPEN THE ROADWAY.

SIGN STRUCTURE SC1209:

1. INSTALL MOT DEVICES IN ACCORDANCE WITH DELDOT MUTCD STANDARD TYPICAL APPLICATION TA-21 FOR THE LEFT LANE CLOSURE ON N. JACKSON STREET.
2. INSTALL PEDESTRIAN SIDEWALK DETOUR IN ACCORDANCE WITH DELDOT MUTCD STANDARD TYPICAL APPLICATION TA-28 FOR THE SIDEWALK ALONG N. JACKSON STREET, ADJACENT TO THE LOCATION OF PROPOSED SIGN STRUCTURE SC1209.
3. PERFORM EXCAVATION FOR DRILLED SHAFT TO THE DIMENSIONS AND ELEVATION SHOWN IN THE PLANS.
4. PERFORM REMAINING CONSTRUCTION ACTIVITY IN WORK AREA AS PER PLANS, INCLUDING PLACING NEW SIGN STRUCTURE SC1209 AND REMOVING EXISTING SIGN STRUCTURE SC1209.
5. INSTALLATION OF PROPOSED SIGN STRUCTURE SC1209 AND REMOVAL OF EXISTING SIGN STRUCTURE SC1209 SHALL BE RESTRICTED TO NIGHTTIME HOURS ONLY. LEFT LANE CLOSURE IN ACCORDANCE WITH DELDOT MUTCD STANDARD TYPICAL APPLICATION TA-21 SHALL BE USED.
6. EXISTING SIGN STRUCTURE SC1209 MAY NOT BE REMOVED UNTIL AFTER THE NEW REPLACEMENT SIGN STRUCTURE SC1209 IS INSTALLED AND ACCEPTED, UNLESS NOTED ON THE PLANS OR OTHERWISE APPROVED BY THE ENGINEER.
7. COMPLETE ALL REMAINING WORK INCLUDING FULL RESTORATION OF AREAS TO ITS ORIGINAL CONDITIONS.
8. REMOVE ALL MOT DEVICES INCLUDING TEMPORARY SIGNS AND REOPEN THE ROADWAY.

CROSS REFERENCE NOTE

1. TEMPORARY TRAFFIC CONTROL DEVICES SHOWN ON I-95 NB ARE PART OF THE TRAFFIC CONTROL SET-UP FOR PROPOSED SIGN STRUCTURE SC1032 (SEE DWG. CS-07).

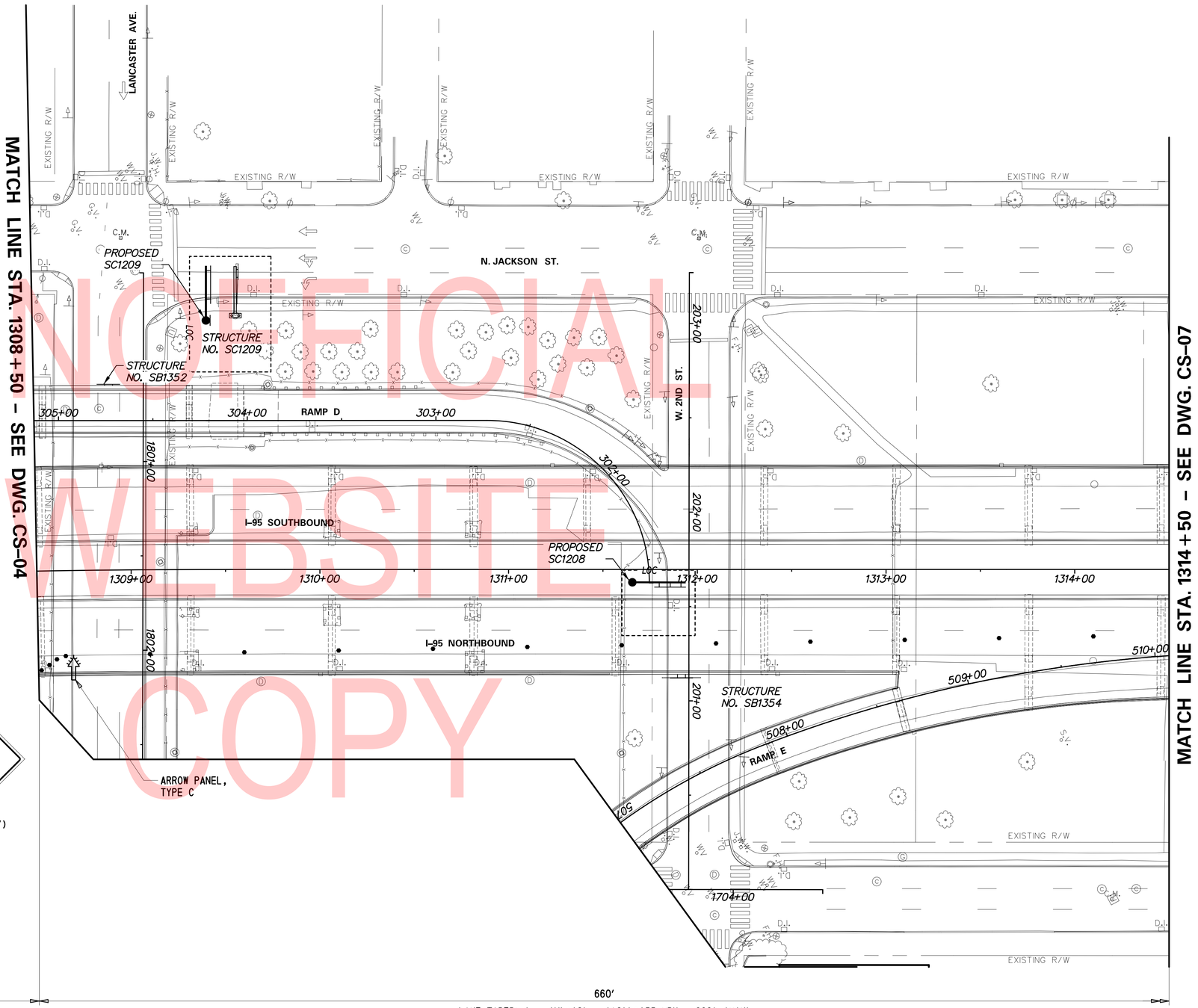

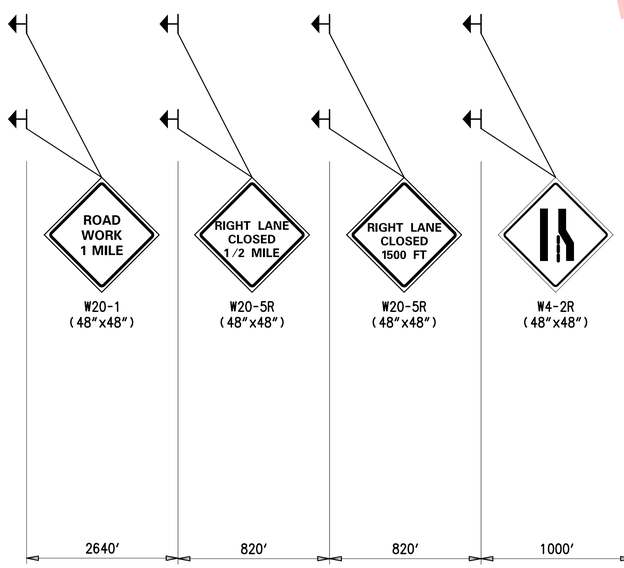

LANE TAPER: L = (W)*(S) = (12')*(55 MPH = 660' (MIN)

UNOFFICIAL WEBSITE COPY

ADDENDA / REVISIONS	

SCALE 0 30 60 90 FEET

CANTILEVER AND OVERHEAD SIGN STRUCTURES, I-95

CONTRACT	BRIDGE NO.	N/A
T201907002	DESIGNED BY: JWS	
COUNTY		
NEW CASTLE	CHECKED BY: RMB	

CONSTRUCTION PHASING, M.O.T., AND EROSION CONTROL PLAN

CS-05
SECTION
TY
SHEET NO.
87

8/13/2019
T:\Dover\Projects\425025.14\600_CADD\05_Official\CS05.dgn

SEQUENCE OF CONSTRUCTION

SIGN STRUCTURE S01194:

1. INSTALL MOT DEVICES IN ACCORDANCE WITH DELDOT MUTCD STANDARD TYPICAL APPLICATION TA-23 FOR THE RIGHT LANE CLOSURE ON MARTIN LUTHER KING JR. BOULEVARD.
2. REMOVE GUARDRAIL TO THE EXTENTS SHOWN IN THE PLANS.
3. PERFORM EXCAVATION FOR DRILLED SHAFT TO THE DIMENSIONS AND ELEVATION SHOWN IN THE PLANS.
4. PERFORM REMAINING CONSTRUCTION ACTIVITY IN WORK AREA AS PER PLANS, INCLUDING INSTALLING NEW GUARDRAIL AND MAINTENANCE STRIP.
5. COMPLETE ALL REMAINING WORK INCLUDING FULL RESTORATION OF AREAS TO ITS ORIGINAL CONDITIONS.
6. REMOVE ALL MOT DEVICES INCLUDING TEMPORARY SIGNS AND REOPEN THE ROADWAY.
7. INSTALL MOT DEVICES IN ACCORDANCE WITH DELDOT MUTCD STANDARD TYPICAL APPLICATION TA-21A FOR THE LEFT LANE CLOSURE ON MARTIN LUTHER KING JR. BOULEVARD.
8. REPEAT STEPS 2 THROUGH 7 FOR THE CONSTRUCTION ACTIVITIES IN THE MEDIAN WORK AREA.
9. PERFORM REMAINING CONSTRUCTION ACTIVITY AS PER PLANS, INCLUDING PLACING NEW SIGN STRUCTURE S01194 AND REMOVING EXISTING SIGN STRUCTURE S01194.
10. INSTALLATION OF PROPOSED SIGN STRUCTURE S01194 AND REMOVAL OF EXISTING SIGN STRUCTURE S01194 SHALL BE RESTRICTED TO NIGHTTIME HOURS ONLY. ROLLING ROAD BLOCKS IN ACCORDANCE WITH DELDOT MUTCD STANDARD TYPICAL APPLICATION TA-35H SHALL BE USED. THE CONTRACTOR SHALL CONTACT DELDOT TRAFFIC TO COORDINATE THE DURATION AND WORK HOUR RESTRICTIONS FOR THE ROLLING ROAD BLOCKS.
11. EXISTING SIGN STRUCTURE S01194 MAY NOT BE REMOVED UNTIL AFTER THE NEW REPLACEMENT SIGN STRUCTURE S01194 IS INSTALLED AND ACCEPTED, UNLESS NOTED ON THE PLANS OR OTHERWISE APPROVED BY THE ENGINEER. INSTALL TEMPORARY SIGNS WHERE NEW SIGN STRUCTURES BLOCK THE VIEW OF EXISTING SIGN STRUCTURES.

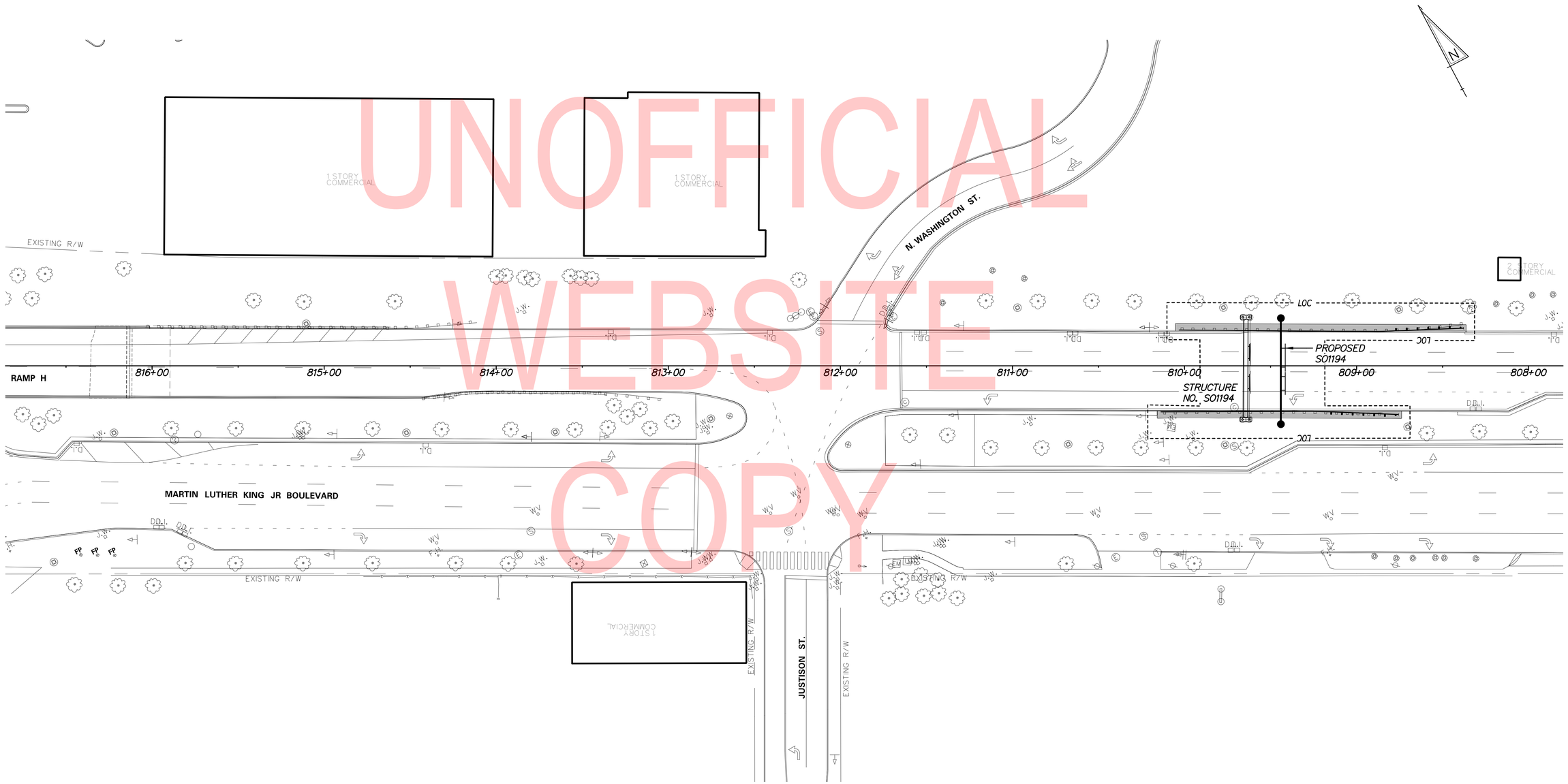

UNOFFICIAL WEBSITE COPY

ADDENDA / REVISIONS	

SCALE 0 30 60 90 FEET

CANTILEVER AND OVERHEAD SIGN STRUCTURES, I-95

CONTRACT	BRIDGE NO.	N/A
T201907002	DESIGNED BY: JWS	
COUNTY	CHECKED BY: RMB	
NEW CASTLE		

CONSTRUCTION PHASING, M.O.T., AND EROSION CONTROL PLAN

CS-06
SECTION
TY
SHEET NO.
88

8/13/2019
T:\Dover\Projects\425025.14.600_CADD\05_Official\CS06.dgn

SEQUENCE OF CONSTRUCTION

SIGN STRUCTURE SC1032/S01034:

1. INSTALL MOT DEVICES IN ACCORDANCE WITH DELDOT MUTCD STANDARDS, THE TEMPORARY TRAFFIC CONTROLS AS SHOWN IN THE PLANS ON I-95 NB, AND THE SHOULDER CLOSURE DETAIL (SEE DWG. CS-14).
2. REMOVE GUARDRAIL AS DIRECTED IN THE PLANS.
3. PERFORM EXCAVATION FOR DRILLED SHAFT TO THE DIMENSIONS AND ELEVATION SHOWN IN THE PLANS.
4. PERFORM REMAINING CONSTRUCTION ACTIVITY IN WORK AREA AS PER PLANS, INCLUDING PLACING NEW SIGN STRUCTURE SC1032, REMOVING EXISTING SIGN STRUCTURE S01034, AND RE-INSTALLING GUARDRAIL.
5. INSTALLATION OF PROPOSED SIGN STRUCTURE SC1032 AND REMOVAL OF EXISTING SIGN STRUCTURE S01034 SHALL BE RESTRICTED TO NIGHTTIME HOURS ONLY. ROLLING ROAD BLOCKS IN ACCORDANCE WITH DELDOT MUTCD STANDARD TYPICAL APPLICATION TA-35H SHALL BE USED. THE CONTRACTOR SHALL CONTACT DELDOT TRAFFIC TO COORDINATE THE DURATION AND WORK HOUR RESTRICTIONS FOR THE ROLLING ROAD BLOCKS.
6. COMPLETE ALL REMAINING WORK INCLUDING FULL RESTORATION OF AREAS TO ITS ORIGINAL CONDITIONS.
7. REMOVE ALL MOT DEVICES INCLUDING TEMPORARY SIGNS AND REOPEN THE ROADWAY.

SIGN STRUCTURE SC1208:

1. PERFORM ALL CONSTRUCTION ACTIVITY IN WORK AREA AS PER PLANS, INCLUDING REMOVING EXISTING SIGN STRUCTURE SC1208.
2. REMOVAL OF EXISTING SIGN STRUCTURE SC1208 SHALL BE RESTRICTED TO NIGHTTIME HOURS ONLY. ROLLING ROAD BLOCKS IN ACCORDANCE WITH DELDOT MUTCD STANDARD TYPICAL APPLICATION TA-35H SHALL BE USED. THE CONTRACTOR SHALL CONTACT DELDOT TRAFFIC TO COORDINATE THE DURATION AND WORK HOUR RESTRICTIONS FOR THE ROLLING ROAD BLOCKS.
3. COMPLETE ALL REMAINING WORK INCLUDING FULL RESTORATION OF AREAS TO ITS ORIGINAL CONDITIONS.
4. PRIOR TO REMOVAL OF THE EXISTING FOUNDATION, INSTALL PEDESTRIAN SIDEWALK DETOUR IN ACCORDANCE WITH DELDOT MUTCD STANDARD TYPICAL APPLICATION TA-28 FOR THE SIDEWALK ALONG N. JACKSON STREET, ADJACENT TO THE LOCATION OF EXISTING SIGN STRUCTURE SC1208.

CROSS REFERENCE NOTE

1. SEE CS-05 FOR THE BEGINNING OF THE TRAFFIC CONTROL SETUP FOR PROPOSED SIGN STRUCTURE SC1032.

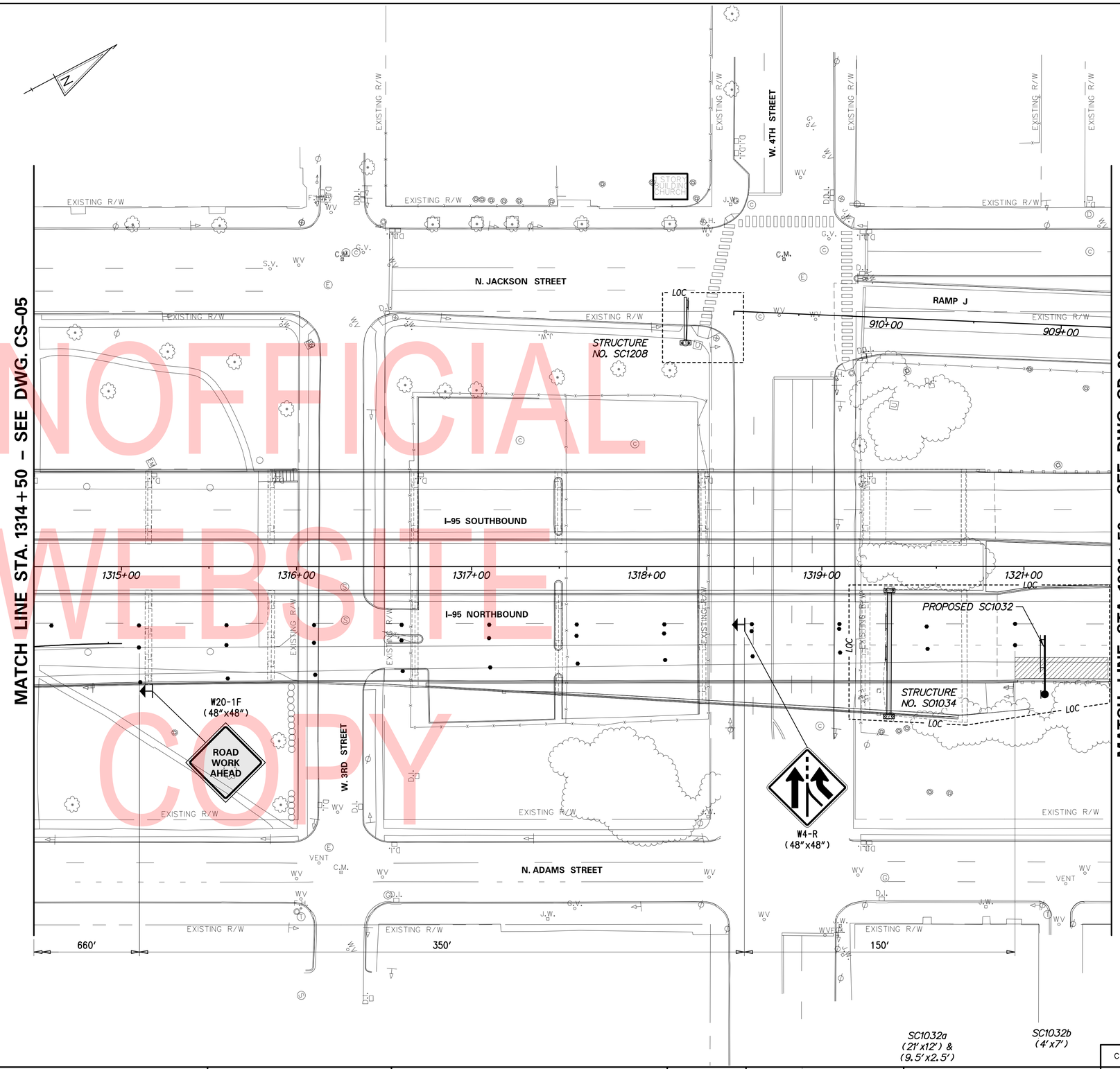

UNOFFICIAL WEBSITE COPY

ADDENDA / REVISIONS	

SCALE 0 30 60 90 FEET

CANTILEVER AND OVERHEAD SIGN STRUCTURES, I-95

CONTRACT	BRIDGE NO.	N/A
T201907002	DESIGNED BY: JWS	
COUNTY		
NEW CASTLE	CHECKED BY: RMB	

CONSTRUCTION PHASING, M.O.T., AND EROSION CONTROL PLAN

CS-07
SECTION
TY
SHEET NO.
89

8/13/2019
T:\Dover\Projects\425025.14\600_CADD\05_Official\CS07.dgn

SEQUENCE OF CONSTRUCTION

SIGN STRUCTURE SC1034/SB1267:

1. INSTALL MOT DEVICES IN ACCORDANCE WITH THE SHOULDER AND LANE CLOSURE DETAIL (SEE DWG. CS-14) AND DELDOT MUTCD STANDARDS FOR THE RIGHT LANE CLOSURE ON I-95 NB.
2. REMOVE GUARDRAIL AS DIRECTED IN THE PLANS.
3. PERFORM EXCAVATION FOR DRILLED SHAFT TO THE DIMENSIONS AND ELEVATION SHOWN IN THE PLANS.
4. PERFORM REMAINING CONSTRUCTION ACTIVITY IN WORK AREA AS PER PLANS, INCLUDING PLACING NEW SIGN STRUCTURE SC1034, REMOVING EXISTING SIGN STRUCTURE SB1267, AND RE-INSTALLING GUARDRAIL.
5. INSTALLATION OF PROPOSED SIGN STRUCTURE SC1034 AND REMOVAL OF EXISTING SIGN STRUCTURE SB1267 SHALL BE RESTRICTED TO NIGHTTIME HOURS ONLY. ROLLING ROAD BLOCKS IN ACCORDANCE WITH DELDOT MUTCD STANDARD TYPICAL APPLICATION TA-35H SHALL BE USED. THE CONTRACTOR SHALL CONTACT DELDOT TRAFFIC TO COORDINATE THE DURATION AND WORK HOUR RESTRICTIONS FOR THE ROLLING ROAD BLOCKS.
6. EXISTING SIGN STRUCTURE SB1267 MAY NOT BE REMOVED UNTIL AFTER THE NEW REPLACEMENT SIGN STRUCTURE SC1034 IS INSTALLED AND ACCEPTED, UNLESS OTHERWISE APPROVED BY THE ENGINEER.
7. COMPLETE ALL REMAINING WORK INCLUDING FULL RESTORATION OF AREAS TO ITS ORIGINAL CONDITIONS.
8. REMOVE ALL MOT DEVICES INCLUDING TEMPORARY SIGNS AND REOPEN THE ROADWAY.

SIGN STRUCTURE SB1280:

1. REMOVAL OF EXISTING SIGN STRUCTURE SB1280 SHALL BE RESTRICTED TO NIGHTTIME HOURS ONLY. ROLLING ROAD BLOCKS IN ACCORDANCE WITH DELDOT MUTCD STANDARD TYPICAL APPLICATION TA-35H SHALL BE USED. THE CONTRACTOR SHALL CONTACT DELDOT TRAFFIC TO COORDINATE THE DURATION AND WORK HOUR RESTRICTIONS FOR THE ROLLING ROAD BLOCKS.

SIGN STRUCTURE SB1281:

1. REMOVAL OF EXISTING SIGN STRUCTURE SB1281 SHALL BE RESTRICTED TO NIGHTTIME HOURS ONLY. ROLLING ROAD BLOCKS IN ACCORDANCE WITH DELDOT MUTCD STANDARD TYPICAL APPLICATION TA-35H SHALL BE USED. THE CONTRACTOR SHALL CONTACT DELDOT TRAFFIC TO COORDINATE THE DURATION AND WORK HOUR RESTRICTIONS FOR THE ROLLING ROAD BLOCKS.
2. EXISTING SIGN STRUCTURE SB1281 MAY NOT BE REMOVED UNTIL AFTER THE PROPOSED SC1035 IS INSTALLED AND ACCEPTED, UNLESS APPROVED BY THE ENGINEER.

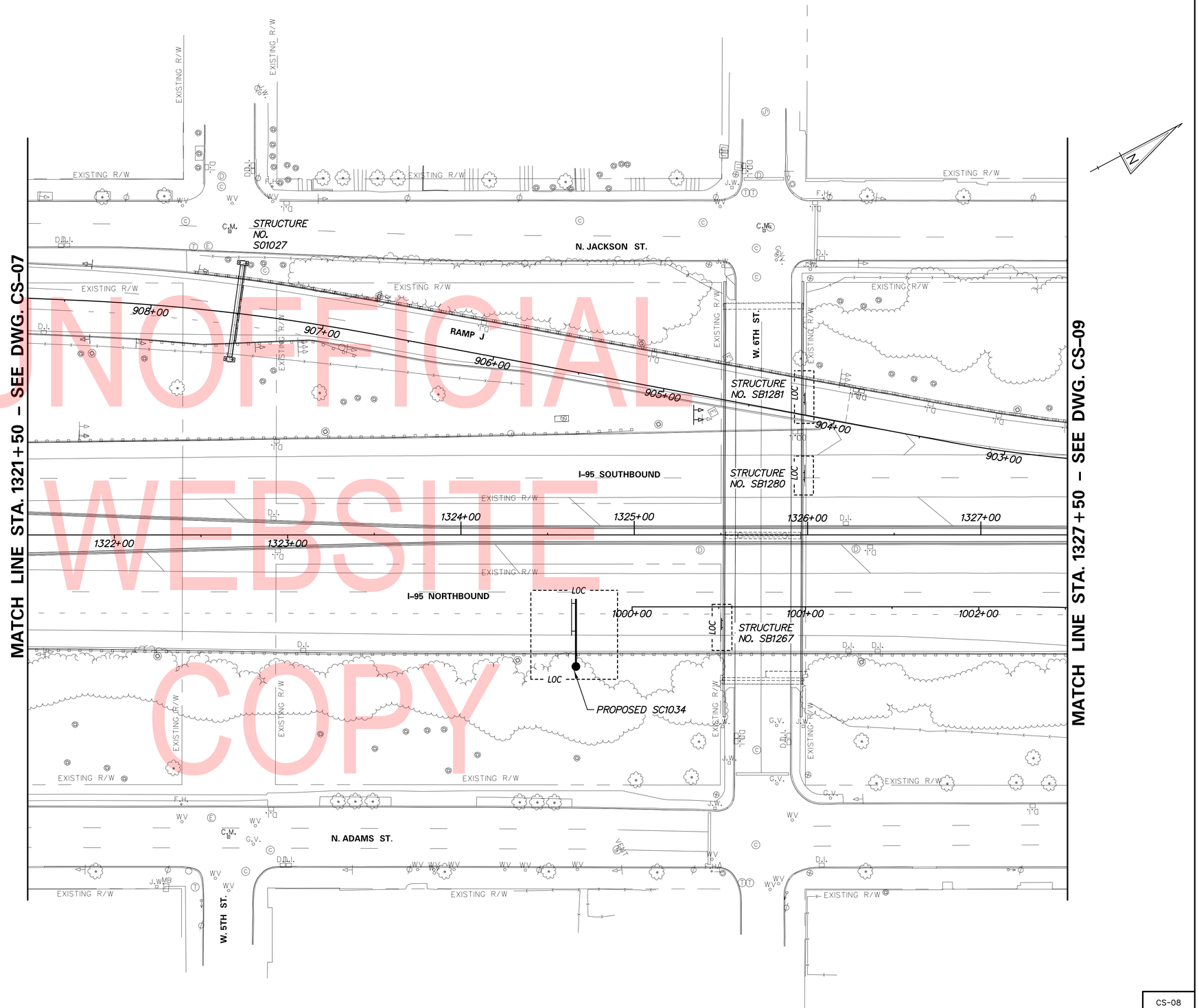

UNOFFICIAL WEBSITE COPY

ADDENDA / REVISIONS	

SCALE 0 30 60 90 FEET

CANTILEVER AND OVERHEAD SIGN STRUCTURES, I-95

CONTRACT	BRIDGE NO.	N/A
T201907002	DESIGNED BY: JWS	
COUNTY	CHECKED BY: RMB	
NEW CASTLE		

CONSTRUCTION PHASING, M.O.T., AND EROSION CONTROL PLAN

CS-08
SECTION
TY
SHEET NO.
90

8/13/2019
T:\Dover\Projects\425025;14\600_CADD\05_Official\CS08.dgn

SEQUENCE OF CONSTRUCTION

SIGN STRUCTURE SC1035/SB1279:

1. INSTALL MOT DEVICES IN ACCORDANCE WITH THE DETOUR PLAN DP-02-SB I-95 OFF-RAMP TO MLK JR BOULEVARD/ 4TH STREET (EXIT 6) AND THE LANE CLOSURE DETAIL (SEE DWG. CS-14) FOR THE RAMP J CLOSURE CLOSURE. EXTEND PLASTIC DRUMS PAST THE WORK ZONE TO THE BARRICADES SHOWN IN DP-02.
2. REMOVE GUARDRAIL AS DIRECTED IN THE PLANS.
3. PERFORM EXCAVATION AND CONSTRUCTION FOR DRILLED SHAFT TO THE DIMENSIONS AND ELEVATION SHOWN IN THE PLANS.
4. STABILIZE AND RESTORE ALL DISTURBED AREAS TO THEIR ORIGINAL CONDITIONS.
5. REPLACE THE GUARDRAIL AS DIRECTED IN THE PLANS.
6. REMOVE ALL MOT DEVICES INCLUDING TEMPORARY SIGNS AND REOPEN THE ROADWAY. THE ROADWAY SHALL NOT BE CLOSED FOR MORE THAN 5 CONSECUTIVE DAYS WITHOUT APPROVAL FROM THE TRAFFIC ENGINEER.
7. PERFORM REMAINING CONSTRUCTION ACTIVITY IN WORK AREA AS PER PLANS, INCLUDING PLACING NEW SIGN STRUCTURE SC1035 AND REMOVING EXISTING SIGN STRUCTURE SB1279.
8. INSTALLATION OF PROPOSED SIGN STRUCTURE SC1035 AND REMOVAL OF EXISTING SIGN STRUCTURE SB1279 SHALL BE RESTRICTED TO NIGHTTIME HOURS ONLY. ROLLING ROAD BLOCKS IN ACCORDANCE WITH DELDOT MUTCD STANDARD TYPICAL APPLICATION TA-35H SHALL BE USED. THE CONTRACTOR SHALL CONTACT DELDOT TRAFFIC TO COORDINATE THE DURATION AND WORK HOUR RESTRICTIONS FOR THE ROLLING ROAD BLOCKS.
9. EXISTING SIGN STRUCTURE SB1279 MAY NOT BE REMOVED UNTIL AFTER THE NEW REPLACEMENT SIGN STRUCTURE SC1035 IS INSTALLED AND ACCEPTED, UNLESS OTHERWISE APPROVED BY THE ENGINEER.

SIGN STRUCTURE SB1268:

1. REMOVAL OF EXISTING SIGN STRUCTURE SB1268 SHALL BE RESTRICTED TO NIGHTTIME HOURS ONLY. ROLLING ROAD BLOCKS IN ACCORDANCE WITH DELDOT MUTCD STANDARD TYPICAL APPLICATION TA-35H SHALL BE USED. THE CONTRACTOR SHALL CONTACT DELDOT TRAFFIC TO COORDINATE THE DURATION AND WORK HOUR RESTRICTIONS FOR THE ROLLING ROAD BLOCKS.
2. EXISTING SIGN STRUCTURE SB1268 MAY NOT BE REMOVED UNTIL AFTER THE NEW REPLACEMENT SIGN STRUCTURE SC1034 (SEE DWG. CS-08) IS INSTALLED AND ACCEPTED, UNLESS OTHERWISE APPROVED BY THE ENGINEER.

SIGN STRUCTURE SB1269:

1. REMOVAL OF EXISTING SIGN STRUCTURE SB1269 SHALL BE RESTRICTED TO NIGHTTIME HOURS ONLY. ROLLING ROAD BLOCKS IN ACCORDANCE WITH DELDOT MUTCD STANDARD TYPICAL APPLICATION TA-35H SHALL BE USED. THE CONTRACTOR SHALL CONTACT DELDOT TRAFFIC TO COORDINATE THE DURATION AND WORK HOUR RESTRICTIONS FOR THE ROLLING ROAD BLOCKS.

SIGN STRUCTURE SB1270:

1. REMOVAL OF EXISTING SIGN STRUCTURE SB1270 SHALL BE RESTRICTED TO NIGHTTIME HOURS ONLY. ROLLING ROAD BLOCKS IN ACCORDANCE WITH DELDOT MUTCD STANDARD TYPICAL APPLICATION TA-35H SHALL BE USED. THE CONTRACTOR SHALL CONTACT DELDOT TRAFFIC TO COORDINATE THE DURATION AND WORK HOUR RESTRICTIONS FOR THE ROLLING ROAD BLOCKS.

SIGN STRUCTURE SB1278:

1. REMOVAL OF EXISTING SIGN STRUCTURE SB1270 SHALL BE RESTRICTED TO NIGHTTIME HOURS ONLY. ROLLING ROAD BLOCKS IN ACCORDANCE WITH DELDOT MUTCD STANDARD TYPICAL APPLICATION TA-35H SHALL BE USED. THE CONTRACTOR SHALL CONTACT DELDOT TRAFFIC TO COORDINATE THE DURATION AND WORK HOUR RESTRICTIONS FOR THE ROLLING ROAD BLOCKS.

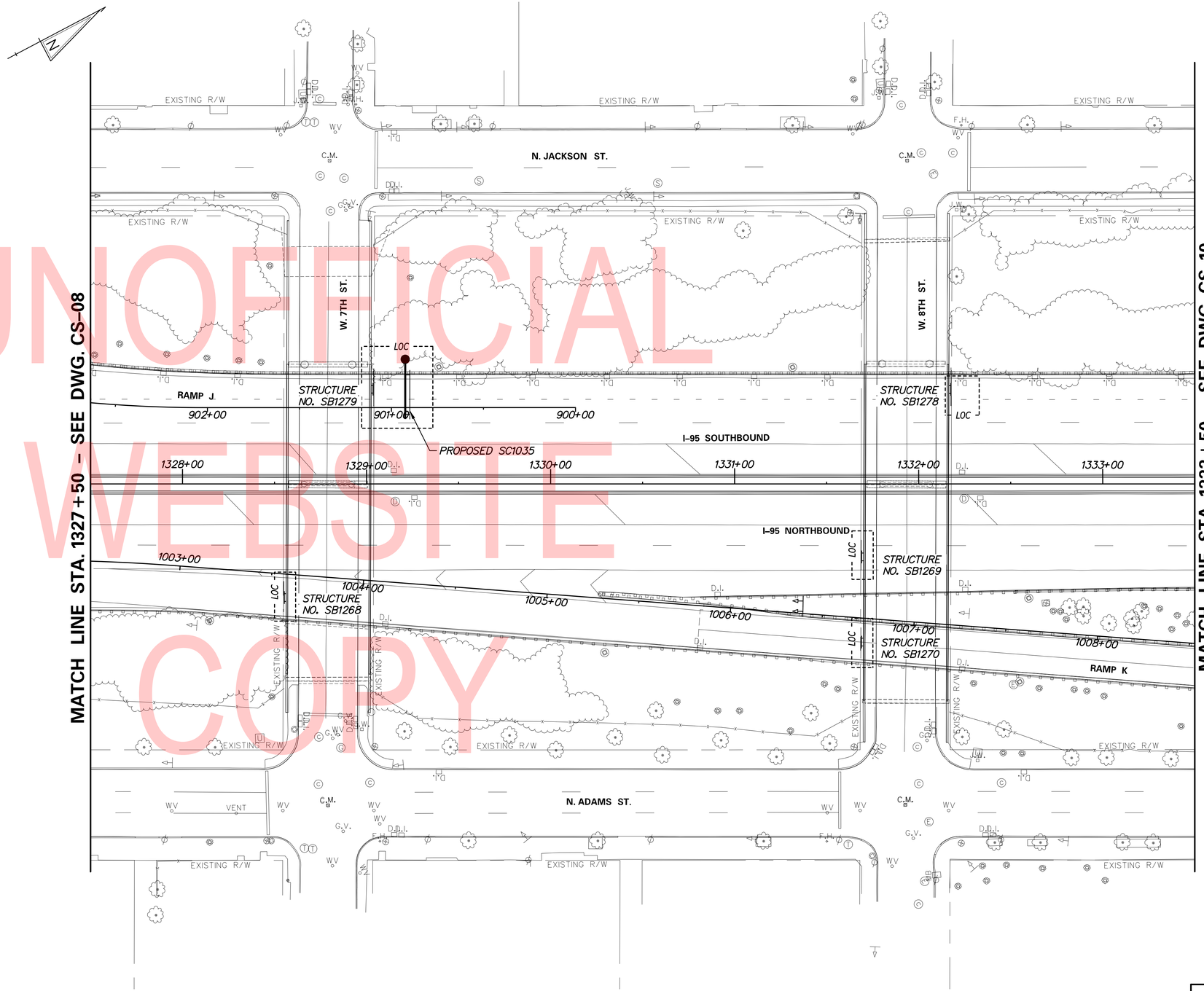

UNOFFICIAL VERSION
WEBSITE COPY

ADDENDA / REVISIONS	

SCALE 0 30 60 90 FEET

CANTILEVER AND OVERHEAD SIGN STRUCTURES, I-95

CONTRACT	BRIDGE NO.	N/A
T201907002	DESIGNED BY: JWS	
COUNTY	CHECKED BY: RMB	
NEW CASTLE		

CONSTRUCTION PHASING, M.O.T., AND EROSION CONTROL PLAN

CS-09
SECTION
TY
SHEET NO.
91

8/13/2019
T:\Dover\Projects\425025.14\600_CADD\05_Official\CS09.dgn

SEQUENCE OF CONSTRUCTION

SIGN STRUCTURE SC1036:

1. INSTALL MOT DEVICES IN ACCORDANCE WITH THE SHOULDER AND LANE CLOSURE DETAIL (SEE DWG. CS-14) AND DELDOT MUTCD STANDARDS FOR THE RIGHT LANE CLOSURE ON I-95 NB.
2. REMOVE GUARDRAIL AS DIRECTED IN THE PLANS.
3. PERFORM EXCAVATION FOR DRILLED SHAFT TO THE DIMENSIONS AND ELEVATION SHOWN IN THE PLANS.
4. PERFORM REMAINING CONSTRUCTION ACTIVITY IN WORK AREA AS PER PLANS, INCLUDING PLACING NEW SIGN STRUCTURE SC1036 AND RE-INSTALLING GUARDRAIL.
5. INSTALLATION OF PROPOSED SIGN STRUCTURE SC1036 SHALL BE RESTRICTED TO NIGHTTIME HOURS ONLY. ROLLING ROAD BLOCKS IN ACCORDANCE WITH DELDOT MUTCD STANDARD TYPICAL APPLICATION TA-35H SHALL BE USED. THE CONTRACTOR SHALL CONTACT DELDOT TRAFFIC TO COORDINATE THE DURATION AND WORK HOUR RESTRICTIONS FOR THE ROLLING ROAD BLOCKS.
6. EXISTING SIGN STRUCTURE SB1269 (SEE DWG. CS-09) MAY NOT BE REMOVED UNTIL AFTER THE NEW REPLACEMENT SIGN STRUCTURE SC1036 IS INSTALLED AND ACCEPTED, UNLESS OTHERWISE APPROVED BY THE ENGINEER. INSTALL TEMPORARY SIGNS WHERE NEW SIGN STRUCTURES BLOCK THE VIEW OF EXISTING SIGN STRUCTURES.
7. COMPLETE ALL REMAINING WORK INCLUDING FULL RESTORATION OF AREAS TO ITS ORIGINAL CONDITIONS.
8. REMOVE ALL MOT DEVICES INCLUDING TEMPORARY SIGNS AND REOPEN THE ROADWAY.

SIGN STRUCTURE SC1037/SB1277:

1. INSTALL MOT DEVICES IN ACCORDANCE WITH THE DETOUR PLAN DP-01-SB I-95 ON-RAMP FROM JACKSON STREET/DELAWARE AVENUE AND THE SHOULDER CLOSURE DETAIL (SEE DWG. CS-14) FOR THE RAMP L CLOSURE.
2. REMOVE GUARDRAIL AS DIRECTED IN THE PLANS.
3. PERFORM EXCAVATION AND CONSTRUCTION FOR DRILLED SHAFT TO THE DIMENSIONS AND ELEVATION SHOWN IN THE PLANS.
4. STABILIZE AND RESTORE ALL DISTURBED AREAS TO THEIR ORIGINAL CONDITIONS.
5. REPLACE THE GUARDRAIL AS DIRECTED IN THE PLANS.
6. REMOVE ALL MOT DEVICES INCLUDING TEMPORARY SIGNS AND REOPEN THE ROADWAY. THE ROADWAY SHALL NOT BE CLOSED FOR MORE THAN 5 CONSECUTIVE DAYS WITHOUT APPROVAL FROM THE TRAFFIC ENGINEER.
7. PERFORM REMAINING CONSTRUCTION ACTIVITY IN WORK AREA AS PER PLANS, INCLUDING PLACING NEW SIGN STRUCTURE SC1037 AND REMOVING EXISTING SIGN STRUCTURE SB1277.
8. INSTALLATION OF PROPOSED SIGN STRUCTURE SC1037 AND REMOVAL OF EXISTING SIGN STRUCTURE SB1277 SHALL BE RESTRICTED TO NIGHTTIME HOURS ONLY. ROLLING ROAD BLOCKS IN ACCORDANCE WITH DELDOT MUTCD STANDARD TYPICAL APPLICATION TA-35H SHALL BE USED. THE CONTRACTOR SHALL CONTACT DELDOT TRAFFIC TO COORDINATE THE DURATION AND WORK HOUR RESTRICTIONS FOR THE ROLLING ROAD BLOCKS.
9. EXISTING SIGN STRUCTURE SB1277 MAY NOT BE REMOVED UNTIL AFTER THE NEW REPLACEMENT SIGN STRUCTURE SC1037 IS INSTALLED AND ACCEPTED, UNLESS OTHERWISE APPROVED BY THE ENGINEER.

SIGN STRUCTURE SC1229:

1. INSTALL MOT DEVICES IN ACCORDANCE WITH DELDOT MUTCD STANDARD TYPICAL APPLICATION TA-21 FOR THE LEFT LANE CLOSURE ON W. 9TH STREET.
2. INSTALL PEDESTRIAN SIDEWALK DETOUR IN ACCORDANCE WITH DELDOT MUTCD STANDARD TYPICAL APPLICATION TA-28 FOR THE SIDEWALK ALONG W. 9TH STREET, ADJACENT TO PROPOSED SIGN STRUCTURE SC1229.
3. PERFORM EXCAVATION FOR DRILLED SHAFT TO THE DIMENSIONS AND ELEVATION SHOWN IN THE PLANS.
4. PERFORM REMAINING CONSTRUCTION ACTIVITY IN WORK AREA AS PER PLANS, INCLUDING PLACING NEW SIGN STRUCTURE SC1229 AND REMOVING EXISTING SIGN STRUCTURE SB1229.
5. INSTALLATION OF PROPOSED SIGN STRUCTURE SC1229 AND REMOVAL OF EXISTING SIGN STRUCTURE SB1229 SHALL BE RESTRICTED TO NIGHTTIME HOURS ONLY. LEFT LANE CLOSURE IN ACCORDANCE WITH DELDOT MUTCD STANDARD TYPICAL APPLICATION TA-21 SHALL BE USED.
6. EXISTING SIGN STRUCTURE SB1229 MAY NOT BE REMOVED UNTIL AFTER THE NEW REPLACEMENT SIGN STRUCTURE SC1229 IS INSTALLED AND ACCEPTED, UNLESS OTHERWISE APPROVED BY THE ENGINEER.
7. COMPLETE ALL REMAINING WORK INCLUDING FULL RESTORATION OF AREAS TO ITS ORIGINAL CONDITIONS.
8. REMOVE ALL MOT DEVICES INCLUDING TEMPORARY SIGNS AND REOPEN THE ROADWAY.

SIGN STRUCTURE SB1276:

1. REMOVAL OF EXISTING SIGN STRUCTURE SB1276 SHALL BE RESTRICTED TO NIGHTTIME HOURS ONLY. ROLLING ROAD BLOCKS IN ACCORDANCE WITH DELDOT MUTCD STANDARD TYPICAL APPLICATION TA-35H SHALL BE USED. THE CONTRACTOR SHALL CONTACT DELDOT TRAFFIC TO COORDINATE THE DURATION AND WORK HOUR RESTRICTIONS FOR THE ROLLING ROAD BLOCKS.

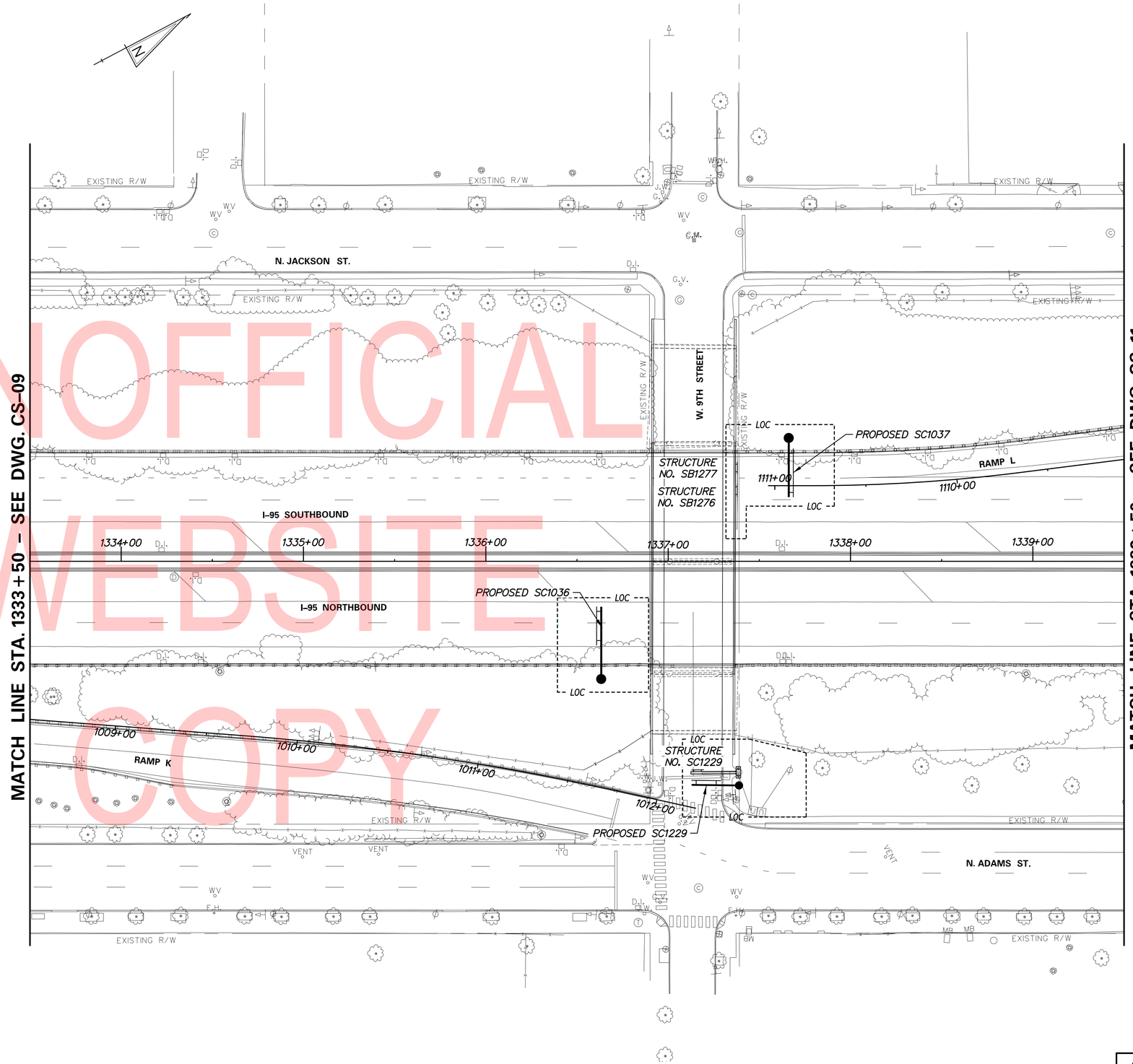

UNOFFICIAL WEBSITE COPY

ADDENDA / REVISIONS	

SCALE 0 30 60 90 FEET

CANTILEVER AND OVERHEAD SIGN STRUCTURES, I-95

CONTRACT	BRIDGE NO.	N/A
T201907002	DESIGNED BY: JWS	
COUNTY	CHECKED BY: RMB	
NEW CASTLE		

CONSTRUCTION PHASING, M.O.T., AND EROSION CONTROL PLAN

CS-10
SECTION
TY
SHEET NO.
92

8/13/2019
T:\Dover\Projects\425025.14\600_CADD\05_Official\CS10.dgn

SEQUENCE OF CONSTRUCTION

SIGN STRUCTURE SC1196:

1. INSTALL MOT DEVICES IN ACCORDANCE WITH THE DETOUR PLAN DP-03-NB I-95 ON-RAMP FROM ADAMS STREET/10TH STREET FOR THE RAMP M CLOSURE.
2. REMOVE FENCE AS DIRECTED IN THE PLANS.
3. PERFORM EXCAVATION AND CONSTRUCTION FOR DRILLED SHAFT TO THE DIMENSIONS AND ELEVATION SHOWN IN THE PLANS.
4. CONSTRUCT FENCE AS SHOWN IN THE PLANS.
5. REMOVE MOT DEVICES AND COVER TEMPORARY SIGNS AND REOPEN THE ROADWAY. THE ROADWAY SHALL NOT BE CLOSED FOR MORE THAN 5 CONSECUTIVE DAYS WITHOUT APPROVAL FROM THE TRAFFIC ENGINEER.
6. WHEN THE CONTRACTOR IS READY TO PERFORM REMAINING CONSTRUCTION ACTIVITY IN WORK AREA AS PER PLANS, INCLUDING PLACING NEW SIGN STRUCTURE SC1196 AND REMOVING EXISTING SIGN STRUCTURE SC1196, UNCOVER TEMPORARY SIGNS AND REINSTALL MOT DEVICES IN ACCORDANCE WITH THE DETOUR PLAN.
7. INSTALLATION OF PROPOSED SIGN STRUCTURE SC1196 AND REMOVAL OF EXISTING SIGN STRUCTURE SC1196 SHALL BE RESTRICTED TO NIGHTTIME HOURS ONLY. THE CONTRACTOR IS REQUIRED TO REMOVE THE DETOUR DURING NON-WORK HOURS.
8. EXISTING SIGN STRUCTURE SC1196 MAY NOT BE REMOVED UNTIL AFTER THE NEW REPLACEMENT SIGN STRUCTURE SC1196 IS INSTALLED AND ACCEPTED, UNLESS NOTED ON THE PLANS OR OTHERWISE APPROVED BY THE ENGINEER.
9. STABILIZE AND RESTORE ALL DISTURBED AREAS TO THEIR ORIGINAL CONDITIONS.
10. REMOVE ALL MOT DEVICES INCLUDING TEMPORARY WARNING SIGNS AND REOPEN THE ROADWAY.

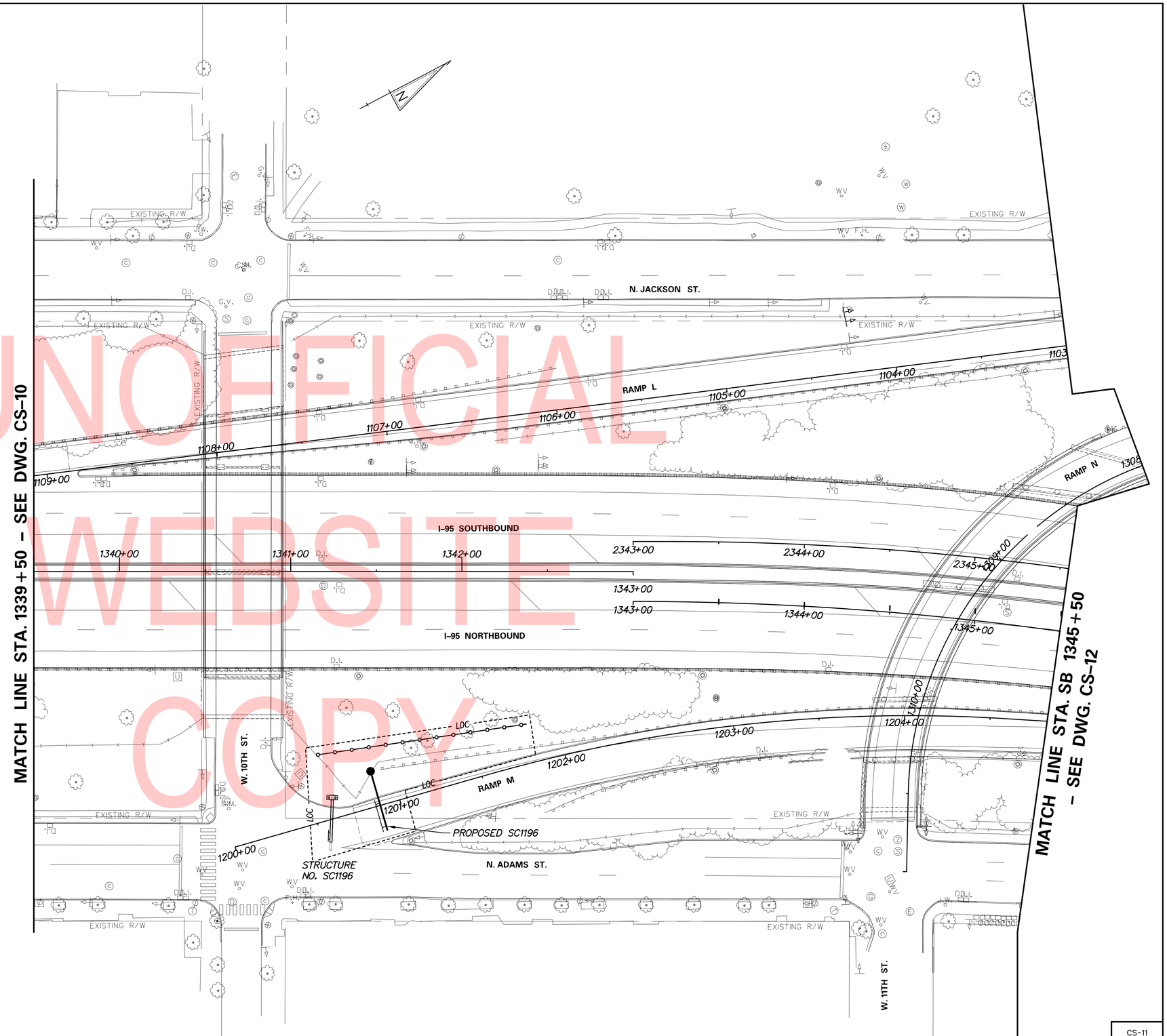

UNOFFICIAL WEBSITE COPY

ADDENDA / REVISIONS	

SCALE 0 30 60 90 FEET

CANTILEVER AND OVERHEAD SIGN STRUCTURES, I-95

CONTRACT	BRIDGE NO.	N/A
T201907002	DESIGNED BY: JWS	
COUNTY		
NEW CASTLE	CHECKED BY: RMB	

CONSTRUCTION PHASING, M.O.T., AND EROSION CONTROL PLAN

CS-11
SECTION
TY
SHEET NO.
93

8/13/2019
T:\Dover\Projects\425025.14\600_CADD\05_Official\CS11.dgn

SEQUENCE OF CONSTRUCTION

SIGN STRUCTURE SC1048:

1. INSTALL MOT DEVICES IN ACCORDANCE WITH THE SHOULDER CLOSURE DETAIL (SEE DWG. CS-14) AND DELDOT MUTCD STANDARDS FOR THE RIGHT SHOULDER CLOSURE ON I-95 SB.
2. REMOVE GUARDRAIL AS DIRECTED IN THE PLANS.
3. REMOVE EXISTING SIGN STRUCTURE SC1048.
4. RE-INSTALL GUARDRAIL.
5. REMOVAL OF EXISTING SIGN STRUCTURE SC1048 SHALL BE RESTRICTED TO NIGHTTIME HOURS ONLY. ROLLING ROAD BLOCKS IN ACCORDANCE WITH DELDOT MUTCD STANDARD TYPICAL APPLICATION TA-35H SHALL BE USED. THE CONTRACTOR SHALL CONTACT DELDOT TRAFFIC TO COORDINATE THE DURATION AND WORK HOUR RESTRICTIONS FOR THE ROLLING ROAD BLOCKS.
6. COMPLETE ALL REMAINING WORK INCLUDING FULL RESTORATION OF AREAS TO ITS ORIGINAL CONDITIONS.
7. REMOVE ALL MOT DEVICES INCLUDING TEMPORARY SIGNS AND REOPEN THE ROADWAY.

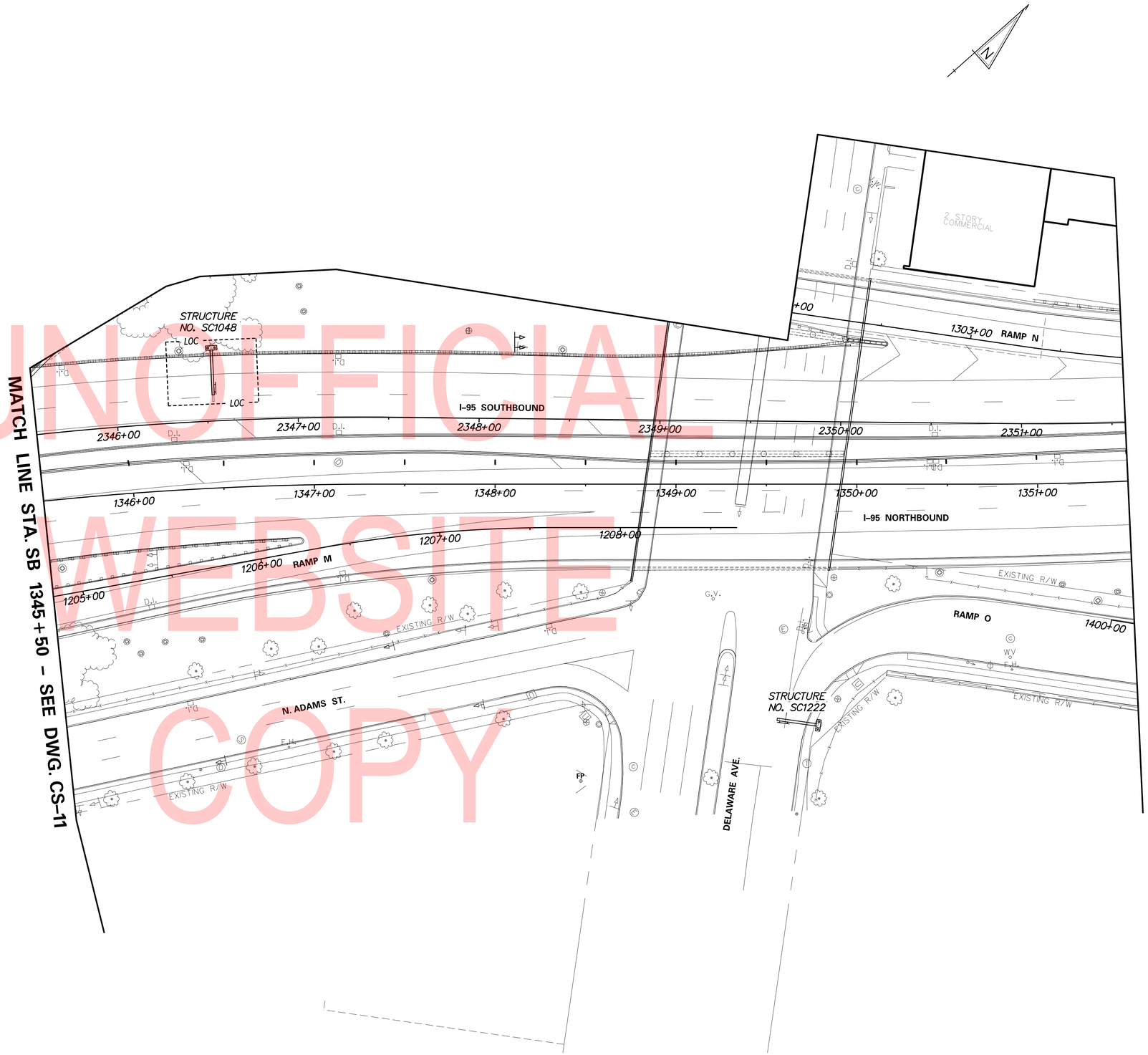

UNOFFICIAL WEBSITE COPY

ADDENDA / REVISIONS	

SCALE 0 30 60 90 FEET

CANTILEVER AND OVERHEAD SIGN STRUCTURES, I-95

CONTRACT	BRIDGE NO.	N/A
T201907002	DESIGNED BY: JWS	
COUNTY		
NEW CASTLE	CHECKED BY: RMB	

CONSTRUCTION PHASING, M.O.T., AND EROSION CONTROL PLAN

CS-12
SECTION
TY
SHEET NO.
94

8/13/2019
T:\Dover\Projects\425025.14\600_CADD\05_Official\CS12.dgn

SEQUENCE OF CONSTRUCTION

SIGN STRUCTURE SC1038:

1. INSTALL MOT DEVICES IN ACCORDANCE WITH THE SHOULDER CLOSURE DETAIL (SEE DWG. CS-14) AND DELDOT MUTCD STANDARDS FOR THE RIGHT SHOULDER CLOSURE ON I-95 NB.
2. PERFORM EXCAVATION FOR DRILLED SHAFT TO THE DIMENSIONS AND ELEVATION SHOWN IN THE PLANS.
3. PERFORM REMAINING CONSTRUCTION ACTIVITY IN WORK AREA AS PER PLANS, INCLUDING PLACING NEW SIGN STRUCTURE SC1038.
4. INSTALLATION OF PROPOSED SIGN STRUCTURE SC1038 SHALL BE RESTRICTED TO NIGHTTIME HOURS ONLY. ROLLING ROAD BLOCKS IN ACCORDANCE WITH DELDOT MUTCD STANDARD TYPICAL APPLICATION TA-35H SHALL BE USED. THE CONTRACTOR SHALL CONTACT DELDOT TRAFFIC TO COORDINATE THE DURATION AND WORK HOUR RESTRICTIONS FOR THE ROLLING ROAD BLOCKS.
5. EXISTING GROUND MOUNTED STRUCTURE MAY NOT BE REMOVED UNTIL AFTER THE NEW REPLACEMENT SIGN STRUCTURE SC1038 IS INSTALLED AND ACCEPTED, UNLESS OTHERWISE APPROVED BY THE ENGINEER.
6. COMPLETE ALL REMAINING WORK INCLUDING FULL RESTORATION OF AREAS TO ITS ORIGINAL CONDITIONS.
7. REMOVE ALL MOT DEVICES INCLUDING TEMPORARY SIGNS AND REOPEN THE ROADWAY.

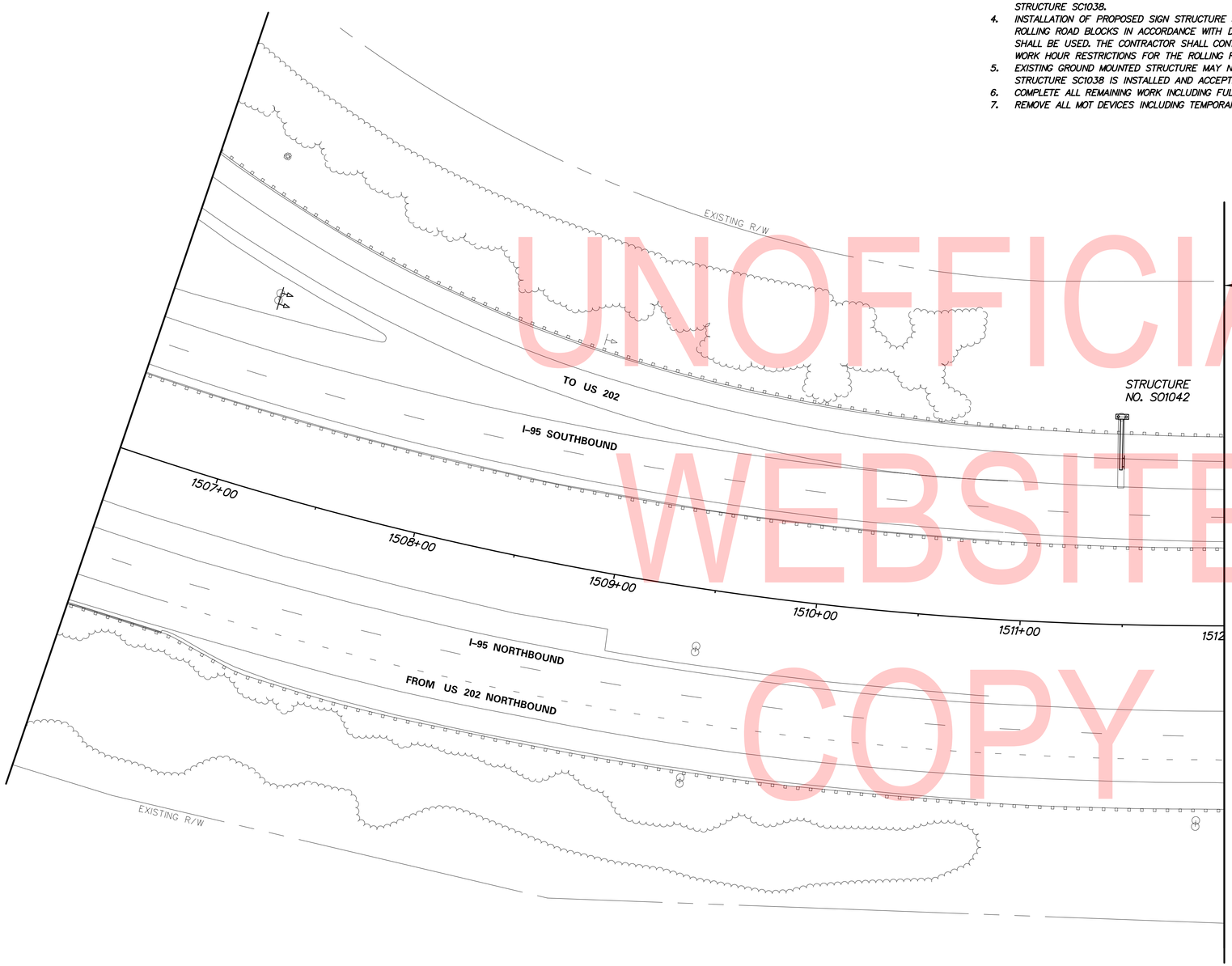

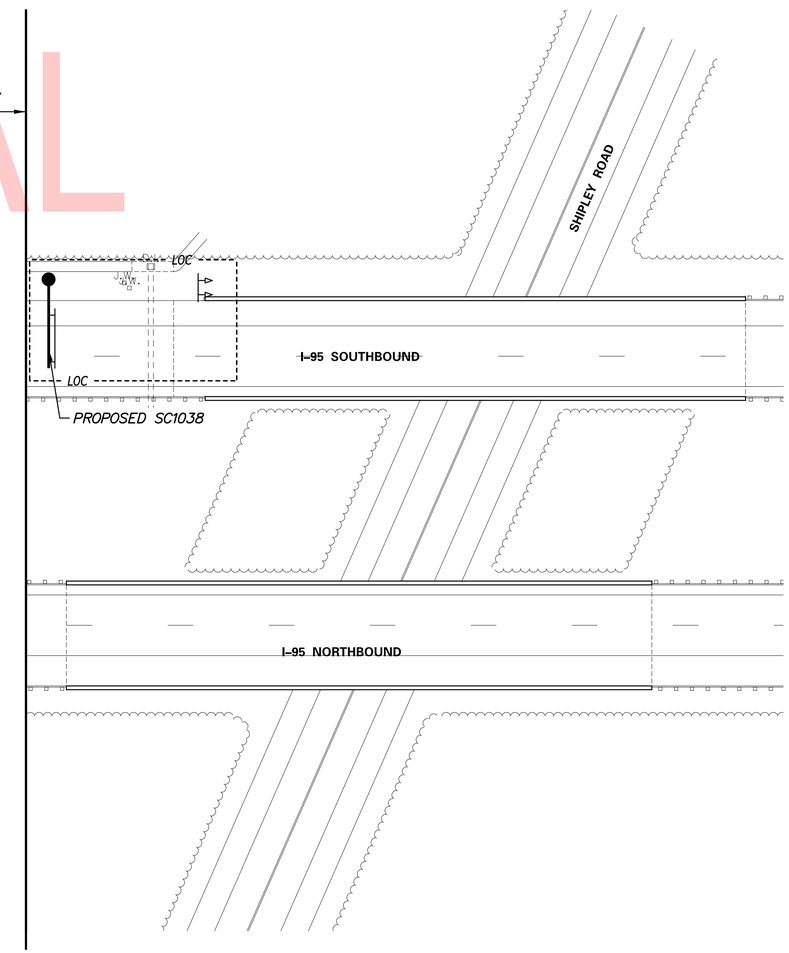

UNOFFICIAL WEBSITE COPY

ADDENDA / REVISIONS	

SCALE: 0 30 60 90 FEET

CANTILEVER AND OVERHEAD SIGN STRUCTURES, I-95

CONTRACT	BRIDGE NO.	N/A
T201907002	DESIGNED BY: JWS	
COUNTY		
NEW CASTLE	CHECKED BY: RMB	

CONSTRUCTION PHASING, M.O.T., AND EROSION CONTROL PLAN

CS-13
SECTION
TY
SHEET NO.
95

8/13/2019
T:\Dover\Projects\425025.14\600_CADD\05_Official\CS13.dgn

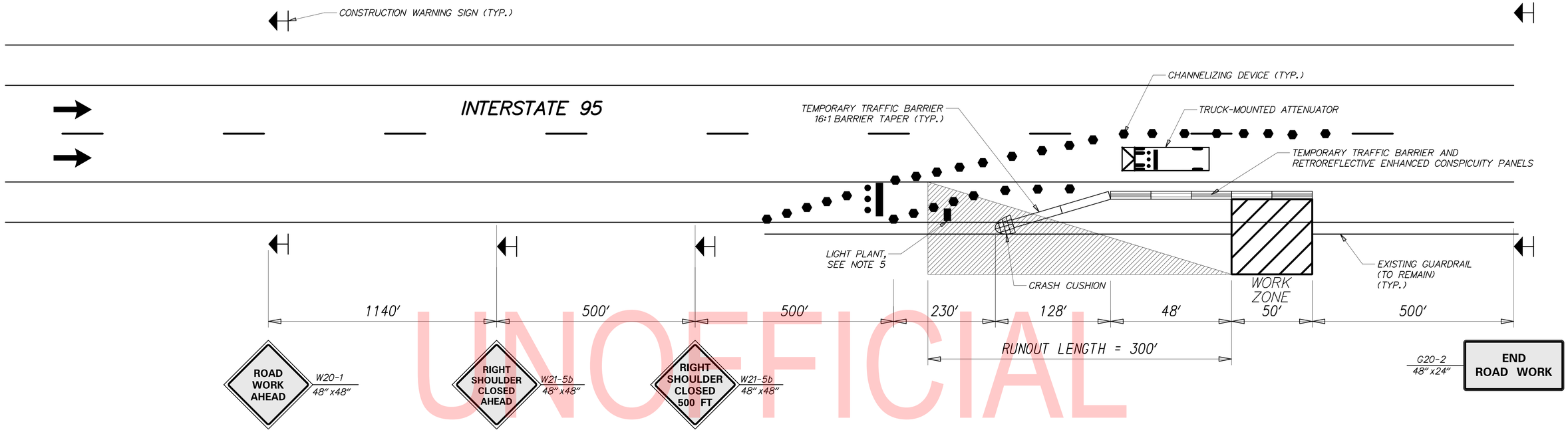

SHOULDER CLOSURE SIGNS

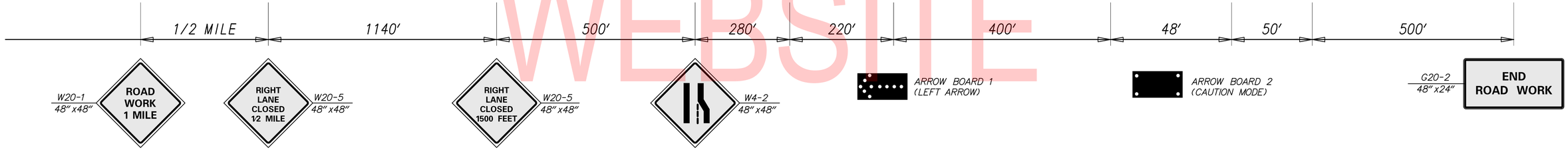

RIGHT LANE CLOSURE SIGNS

UNOFFICIAL WEBSITE COPY

NOTES:

1. ALL SIGNING SHALL COMPLY WITH THE "DELAWARE MANUAL ON UNIFORM TRAFFIC DEVICES" (DE MUTCD)
2. ONLY ONE SET OF SIGNS, SHOULDER CLOSURE OR LANE CLOSURE, SHALL BE VISIBLE AT ANY TIME. SIGNS FOR THE CLOSURE TYPE NOT IN USE SHALL BE COMPLETELY COVERED, WITH NO RETROREFLECTIVE MATERIAL SHOWING.
3. WHEN AN ENTRANCE RAMP INTERSECTS THE SIGNED AREA, ADDITIONAL SIGNS OR TRAFFIC CONTROL DEVICES MAY BE WARRANTED ON THE RAMP, AS DIRECTED BY THE ENGINEER.
4. THE CONTRACTOR SHALL BE RESPONSIBLE FOR COORDINATING HIS WORK WITH OTHER CONTRACTORS IN THE AREA.
5. LIGHT PLANT IS REQUIRED FOR NIGHTTIME WORK ONLY.

BARRIER LENGTH OF NEED: APPROACHING TRAFFIC

$$\frac{L_s + (b/a) * L_t - L_a}{(b/a) + (L_s / L_t)} = \frac{20.0 + (1/16) * 48.0 - 2.0}{(1/16) + (20.0 / 300)} = 163'$$

(NOTE: BARRIER LENGTH OF NEED BASED ON A 10′ SHOULDER WIDTH)

RUNOUT LENGTH = 300′

AREA BEHIND RUNOUT LENGTH

ADDENDA / REVISIONS		NOT TO SCALE	CANTILEVER AND OVERHEAD SIGN STRUCTURES, I-95	CONTRACT T201907002	BRIDGE NO. N/A	SHOULDER AND LANE CLOSURE DETAILS	CS-14
				COUNTY NEW CASTLE	DESIGNED BY: JWS		SECTION TY
					CHECKED BY: RMB		SHEET NO. 96

8/13/2019
T:\Dover\Projects\425025,14\600_CADD\05_Official\CS14.dgn

PORTABLE CHANGEABLE MESSAGE SIGNS

PRIOR TO DETOUR
(10 DAYS PRIOR TO BEGINNING OF DETOUR)

PCMS-1

RAMP TO I-95 SB TO CLOSE	STARTING MM/DD

DURING DETOUR
(DISPLAY FOR 5 DAYS AFTER IMPLEMENTATION OF DETOUR)

PCMS-1

RAMP TO I-95 SB CLOSED	FOLLOW DETOUR

LEGEND

= CLOSURE AREA

= RECOMMENDED DETOUR ROUTE

SPECIAL SIGNS

PREPARED BY
T.Y. LIN INTERNATIONAL

Douglas E. Finney 8/7/2019
DATE

THIS SEAL APPLIES TO ALL SHEETS BEARING THE "TY" SECTION DESIGNATION.

DOUGLAS E. FINNEY REGISTERED PROFESSIONAL ENGINEER NO. 8434 DELAWARE
SEAL

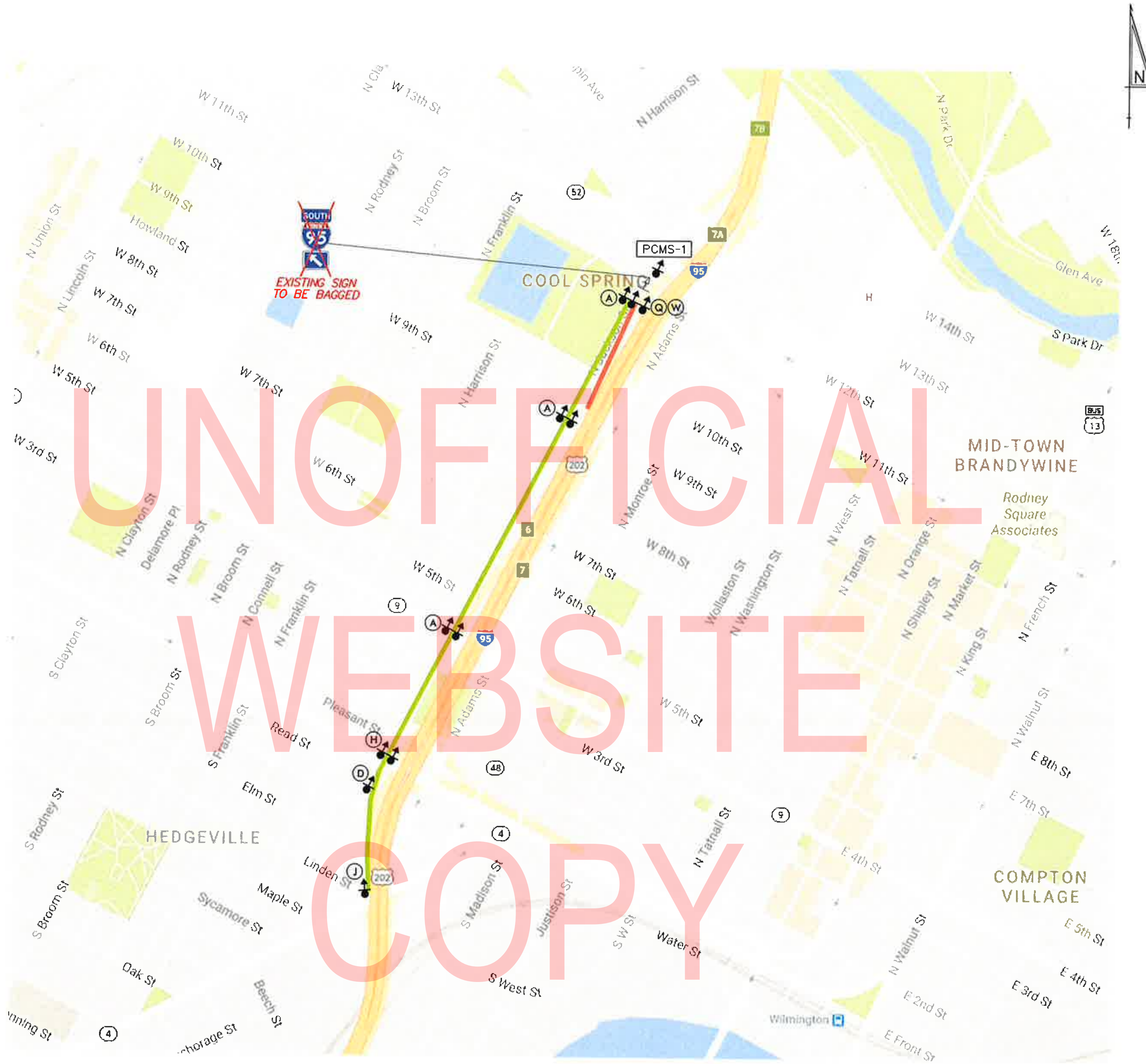

UNOFFICIAL WEBSITE COPY

LEGEND

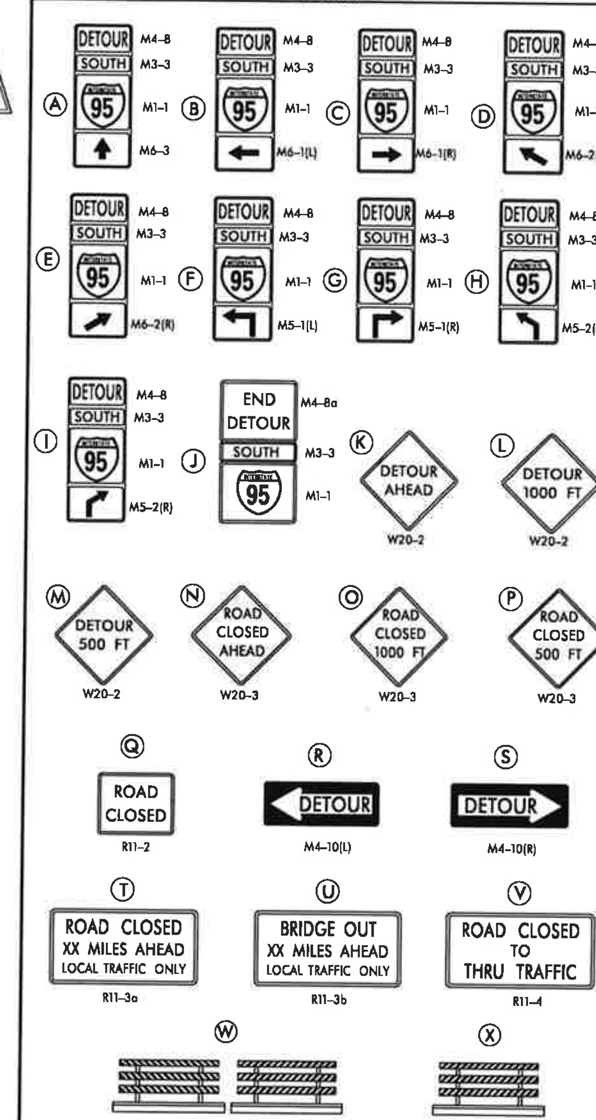

GENERAL NOTES

1. ALL TEMPORARY TRAFFIC CONTROL DEVICES ARE TO BE SUPPLIED AND MAINTAINED BY THE GENERAL CONTRACTOR AND SHALL BE IN COMPLIANCE WITH THIS PLAN AND THE DELAWARE MANUAL ON UNIFORM TRAFFIC CONTROL DEVICES (DE MUTCD) LATEST EDITION.

2. SIGNS "N" THROUGH "Q" AND "T" AND "V", THE WORD "ROAD" SHALL BE CHANGED TO "RAMP", "RR XING" OR "BRIDGE" WHERE APPLICABLE.

3. "W" TYPE 3 BARRICADES AT A ROAD CLOSURE SHALL BE PLACED COMPLETELY ACROSS THE ROADWAY, FROM CURB TO CURB, OR FROM EDGE OF ROAD TO EDGE OF ROAD, WITH THE STRIPES POSITIONED DOWNWARD TOWARD THE CENTER OF THE ROADWAY.

4. BARRICADES SHALL BE A MINIMUM OF 6 FEET WIDE UNLESS DIRECTED BY THE ENGINEER.

CONCURRENCE FOR IMPLEMENTATION
TRAFFIC SAFETY 7-22-19
DATE

ADDENDA / REVISIONS

NOT TO SCALE

CANTILEVER AND OVERHEAD SIGN STRUCTURES, I-95

CONTRACT	T201907002	PERMIT NO.	N/A
COUNTY	NEW CASTLE	DESIGNED BY:	RMB
		CHECKED BY:	JWS

DP-01-SB I-95 ON-RAMP FROM JACKSON STREET/ DELAWARE AVENUE

SECTION TY
SHEET NO. 97

PORTABLE CHANGEABLE MESSAGE SIGNS

PRIOR TO DETOUR
(10 DAYS PRIOR TO BEGINNING OF DETOUR)

PCMS-1

EXIT 6 TO BE CLOSED	STARTING MM/DD

DURING DETOUR
(DISPLAY FOR 5 DAYS AFTER IMPLEMENTATION OF DETOUR)

PCMS-1

EXIT 6 CLOSED AHEAD	FOLLOW DETOUR

LEGEND

= CLOSURE AREA

= RECOMMENDED DETOUR ROUTE

SPECIAL SIGNS

Y

48"

EXIT 6

8"D

Black Legend; Retroreflective Fluorescent Orange Background

UNOFFICIAL WEBSITE COPY

LEGEND

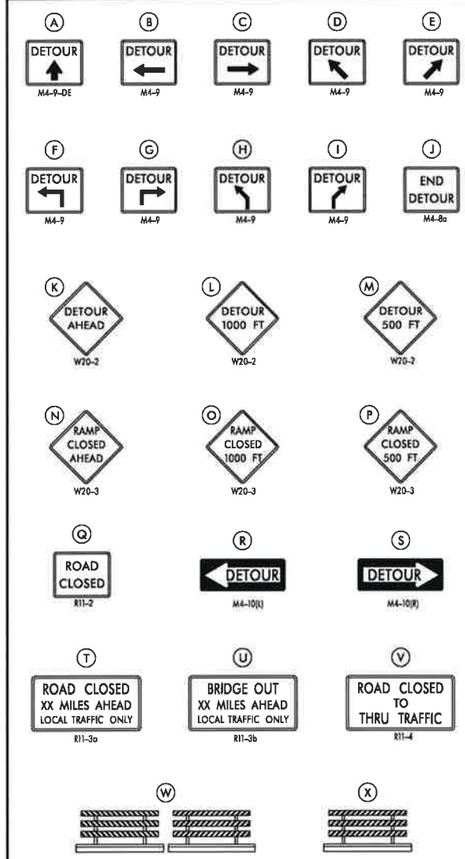

GENERAL NOTES

1. ALL TEMPORARY TRAFFIC CONTROL DEVICES ARE TO BE SUPPLIED AND MAINTAINED BY THE GENERAL CONTRACTOR AND SHALL BE IN COMPLIANCE WITH THIS PLAN AND THE DELAWARE MANUAL ON UNIFORM TRAFFIC CONTROL DEVICES (DE MUTCD) LATEST EDITION.

2. SIGNS "N" THROUGH "Q" AND "T" AND "V", THE WORD "ROAD" SHALL BE CHANGED TO "RAMP", "RR XING" OR "BRIDGE" WHERE APPLICABLE.

3. "W" TYPE 3 BARRICADES AT A ROAD CLOSURE SHALL BE PLACED COMPLETELY ACROSS THE ROADWAY, FROM CURB TO CURB, OR FROM EDGE OF ROAD TO EDGE OF ROAD, WITH THE STRIPES POSITIONED DOWNWARD TOWARD THE CENTER OF THE ROADWAY.

4. BARRICADES SHALL BE A MINIMUM OF 6 FEET WIDE UNLESS DIRECTED BY THE ENGINEER.

PREPARED BY
T.Y. LIN INTERNATIONAL

Douglas E. Finney — 8/7/2019
THIS SEAL APPLIES TO ALL SHEETS BEARING THE "TY" SECTION DESIGNATION. — DATE

DOUGLAS E. FINNEY REGISTERED NO. 8434 DELAWARE PROFESSIONAL ENGINEER
SEAL

CONCURRENCE FOR IMPLEMENTATION

TRAFFIC SAFETY — 8-7-19 DATE

LAST REVISED: 9/11/2018
7/25/2019
2:27:59 PM
SFILES

ADDENDA / REVISIONS		NOT TO SCALE	CANTILEVER AND OVERHEAD SIGN STRUCTURES, I-95	CONTRACT T201907002	PERMIT NO. N/A	DP-02-SB I-95 OFF-RAMP TO MLK JR BOULEVARD/ 4TH STREET (EXIT 6)	SECTION TY
				COUNTY NEW CASTLE	DESIGNED BY: RMB		SHEET NO. 98
					CHECKED BY: JWS		

PORTABLE CHANGEABLE MESSAGE SIGNS

PRIOR TO DETOUR
(10 DAYS PRIOR TO BEGINNING OF DETOUR)

PCMS-1

RAMP TO I-95 NB TO CLOSE	STARTING MM/DD

DURING DETOUR
(DISPLAY FOR 5 DAYS AFTER IMPLEMENTATION OF DETOUR)

PCMS-1

RAMP TO I-95 NB CLOSED	FOLLOW DETOUR

LEGEND

= CLOSURE AREA

= RECOMMENDED DETOUR ROUTE

SPECIAL SIGNS

UNOFFICIAL WEBSITE COPY

LEGEND

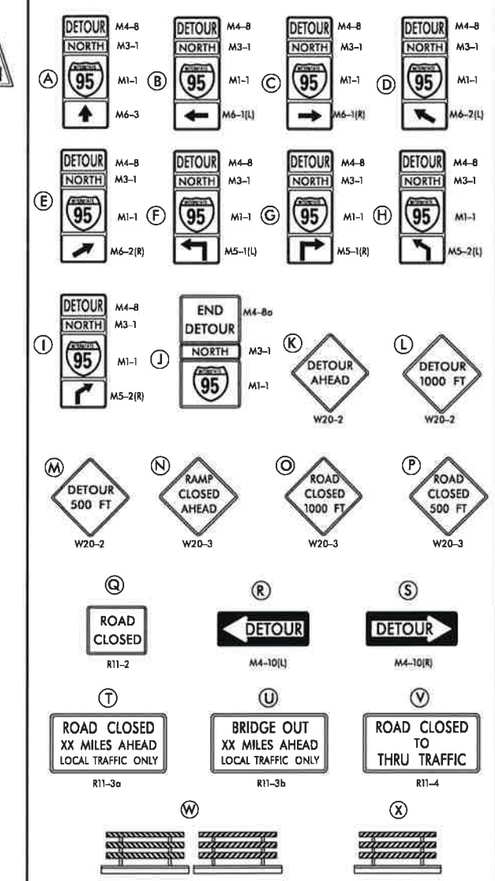

GENERAL NOTES

1. ALL TEMPORARY TRAFFIC CONTROL DEVICES ARE TO BE SUPPLIED AND MAINTAINED BY THE GENERAL CONTRACTOR AND SHALL BE IN COMPLIANCE WITH THIS PLAN AND THE DELAWARE MANUAL ON UNIFORM TRAFFIC CONTROL DEVICES (DE MUTCD) LATEST EDITION.

2. SIGNS "N" THROUGH "Q" AND "T" AND "V", THE WORD "ROAD" SHALL BE CHANGED TO "RAMP", "RR XING" OR "BRIDGE" WHERE APPLICABLE.

3. "W" TYPE 3 BARRICADES AT A ROAD CLOSURE SHALL BE PLACED COMPLETELY ACROSS THE ROADWAY, FROM CURB TO CURB, OR FROM EDGE OF ROAD TO EDGE OF ROAD, WITH THE STRIPES POSITIONED DOWNWARD TOWARD THE CENTER OF THE ROADWAY.

4. BARRICADES SHALL BE A MINIMUM OF 6 FEET WIDE UNLESS DIRECTED BY THE ENGINEER.

CONCURRENCE FOR IMPLEMENTATION

TRAFFIC SAFETY — DATE: 8-7-19

PREPARED BY
T.Y. LIN INTERNATIONAL

Douglas E. Finney — 8/7/2019
THIS SEAL APPLIES TO ALL SHEETS BEARING THE "TY" SECTION DESIGNATION. — DATE

DOUGLAS E. FINNEY REGISTERED NO. 8434 DELAWARE PROFESSIONAL ENGINEER
SEAL

ADDENDA / REVISIONS

NOT TO SCALE

CANTILEVER AND OVERHEAD SIGN STRUCTURES, I-95

CONTRACT	T201907002
COUNTY	NEW CASTLE
PERMIT NO.	N/A
DESIGNED BY:	RMB
CHECKED BY:	JWS

DP-03-NB I-95 ON-RAMP FROM ADAMS STREET/ 10TH STREET

SECTION	TY
SHEET NO.	99

LAST REVISED: 9/11/2018
7/25/2019
2:20:04 PM
SFILES