THE STATE OF DELAWARE
DEPARTMENT OF TRANSPORTATION

U.S. CUSTOMARY UNITS

CONSTRUCTION PLANS FOR:

REHABILITATION OF I-95, 2ND STREET ON-RAMP IMPROVEMENTS

CONTRACT NUMBER: T201907402

FEDERAL AID PROJECT NUMBER: NH-N059 (44)

COUNTY: NEW CASTLE **M.R. #: N059**

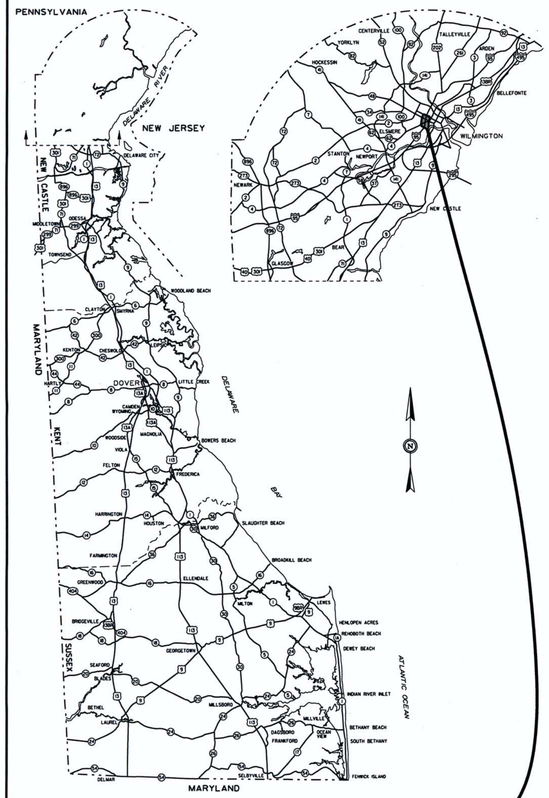

GENERAL LOCATION OF CONTRACT

END CONTRACT STATION 1312+17

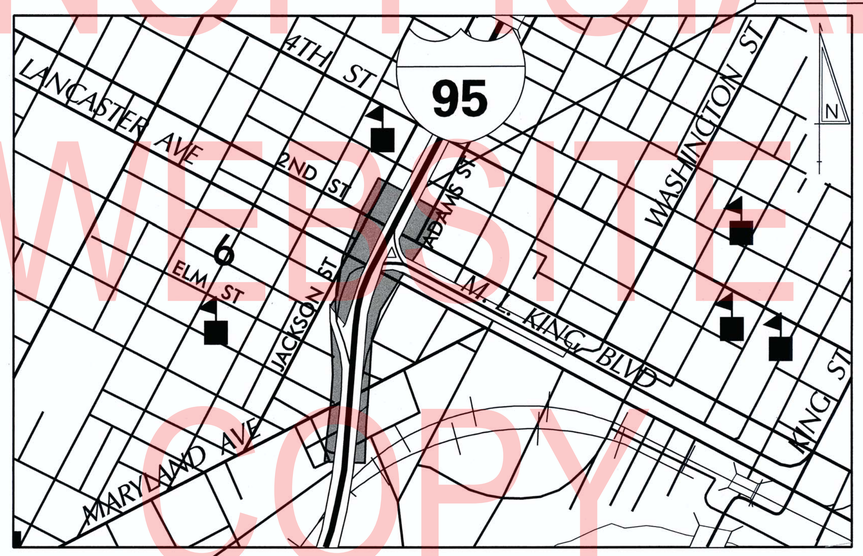

LOCATION MAP
NOT TO SCALE

BEGIN CONTRACT STATION 1294+49

DESIGN DESIGNATION

RAMP D

FUNCTIONAL CLASS: INTERSTATE	D.H.V. PROJECTED: 734	YEAR: 2040
TYPE OF CONSTRUCTION: BRIDGE REHABILITATION	DESIGN SPEED: 40 M.P.H.	
A.A.D.T. CURRENT: 8,100 YEAR: 2015	TRUCKS: 4.6 %	
A.A.D.T. PROJECTED: 9,130 YEAR: 2040	DIRECTION OF DISTRIBUTION: N/A	

APPROVED DESIGN EXCEPTIONS

DESIGN PARAMETER	REQUIRED	PROVIDED	DATE
MAXIMUM GRADE - RAMP D	6.0%	7.0%	8/23/2019
SHOULDER WIDTH - RAMP D	8'-10'	2' MIN.	8/23/2019
HORIZONTAL CURVE RADIUS - RAMP D	485'	86'	8/23/2019
MINIMUM K (SAG) - RAMP D	64.00	14.96	8/23/2019

ADDENDA / REVISIONS

DESCRIPTION	NAME & DATE

ASSOCIATED CONTRACTS

CONTRACT NO.	CONTRACT NAME
64-03-004	INTERSTATE HIGHWAY ROUTE I-95 SOUTH WILMINGTON VIADUCT
76-01-015	WILMINGTON BOULEVARD I-95 MODIFICATIONS
75-06-001	I-95 WIDENING AND CHRISTINA INTERCHANGE TO SOUTH WILMINGTON VIADUCT
78-091-01	INTERSTATE HIGHWAY ROUTE I-95 SOUTH WILMINGTON VIADUCT WIDENING AND RESURFACING
96-074-07	WILMINGTON VIADUCT REHABILITATION AND PAINTING

APPROVED FOR ADVERTISEMENT

DIRECTOR OF TRANSPORTATION SOLUTIONS — DATE: 08/29/2019

PREPARED BY

WRA Whitman, Requardt and Associates, LLP
Engineers • Architects • Environmental Planners Est. 1915

THIS SEAL APPLIES TO ALL SHEETS BEARING THE "WRA" SECTION DESIGNATION. — DATE: 8/27/19

WILLIAM A. GESCHKE — LICENSE No. 15578 — DELAWARE PROFESSIONAL ENGINEER — SEAL

PREPARED BY

RJM ENGINEERING
6031 University Blvd, Ellicott City, Maryland 21042

THIS SEAL APPLIES TO ALL SHEETS BEARING THE "RJM" SECTION DESIGNATION. — DATE: 8/26/2019

DONG ZHAO — LICENSE No. 21088 — DELAWARE PROFESSIONAL ENGINEER — SEAL

UNOFFICIAL WEBSITE COPY

N:\31987_00A\CONTRACT_RAMP_D\CADD\TC01.dgn
8/26/2019 10:35:42 AM

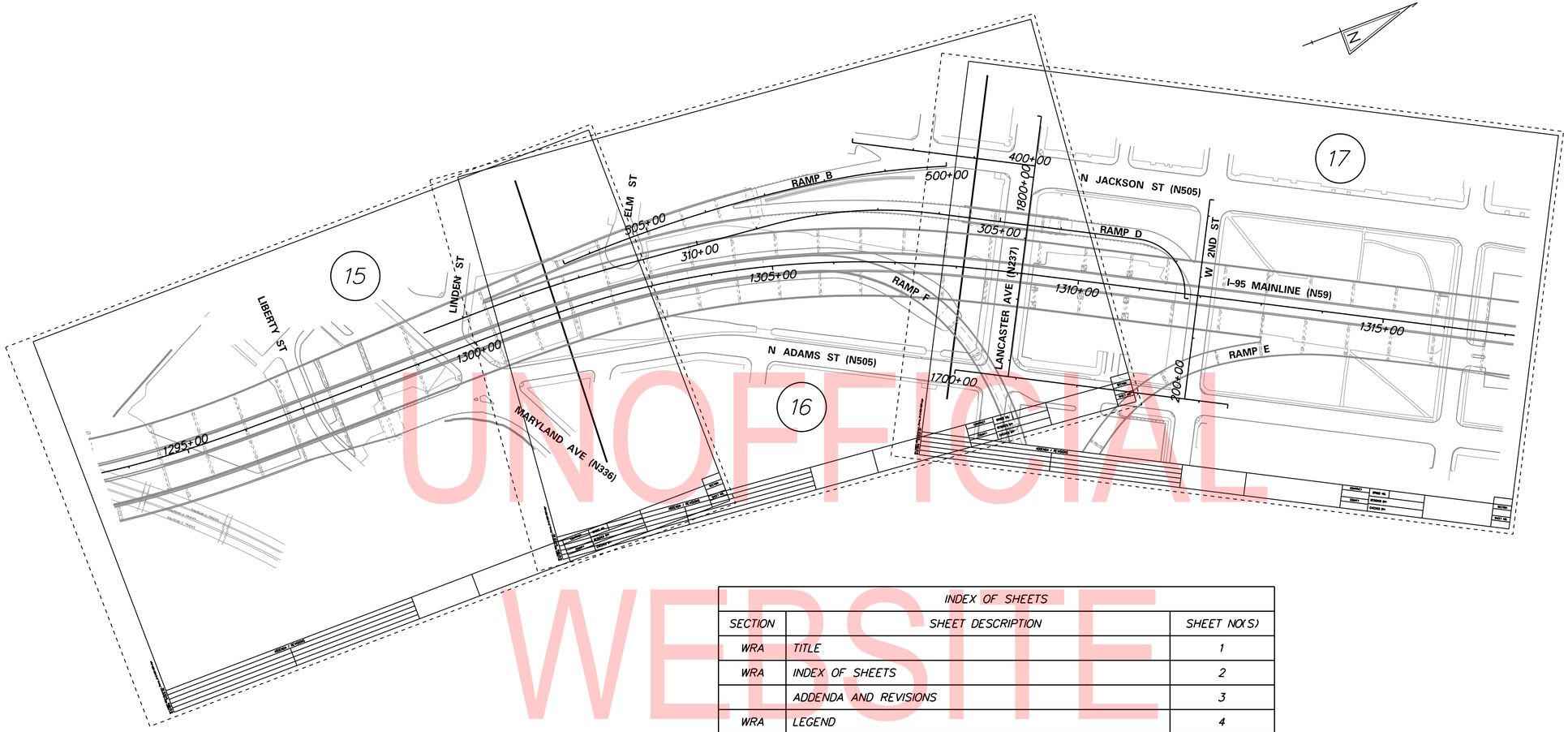

UNOFFICIAL WEBSITE COPY

INDEX OF SHEETS		
SECTION	SHEET DESCRIPTION	SHEET NO(S)
WRA	TITLE	1
WRA	INDEX OF SHEETS	2
	ADDENDA AND REVISIONS	3
WRA	LEGEND	4
WRA	NOTES	5
WRA	EARTHWORK SUMMARY	6
WRA	TYPICAL SECTIONS	7-10
WRA	HORIZONTAL AND VERTICAL CONTROL	11-14
WRA	CONSTRUCTION PLANS (CP)	15-17
WRA	PROFILES	18-19
WRA	GRADES AND GEOMETRICS AND JOINT LAYOUT (GG)	20-22
WRA	CONSTRUCTION DETAILS	23-28
WRA	GRADING PLAN	29
WRA	BRIDGE PLANS - SEE BRIDGE PLANS FOR TABLE OF CONTENTS	30-204
WRA	UTILITY RELOCATION PLANS	205-209
WRA	CONSTRUCTION PHASING, M.O.T. AND EROSION CONTROL PLANS	210-230
WRA	DETOUR PLANS	231-237
WRA	LIGHTING PLANS	238-249
WRA	SIGNING, STRIPING AND CONDUIT PLANS (SS)	250-258, 261
RJM	SIGNING, STRIPING AND CONDUIT PLANS (SS)	259-260
WRA	SIGNALIZATION PLANS	262-263

N:\31987-004\Contract_-Ramp_D\CADD\IS01.dgn
8/5/2019 9:42:31 AM

ADDENDA / REVISIONS

SCALE
0 100 200 600
FEET

REHABILITATION OF I-95, 2ND STREET ON-RAMP IMPROVEMENTS

CONTRACT	BRIDGE NO.	
T201907402	DESIGNED BY: J. DAVIS	
COUNTY		
NEW CASTLE	CHECKED BY: B. TOWNSEND	

INDEX OF SHEETS

IS-01
SECTION
WRA
SHEET NO.
2

UNOFFICIAL
WEBSITE
COPY

N:\31987-004\Contract_Ramp_D\CADD\AR01.dgn
8/27/2019 3:13:57 PM

ADDENDA / REVISIONS		NOT TO SCALE	REHABILITATION OF I-95, 2ND STREET ON-RAMP IMPROVEMENTS	CONTRACT T201907402	BRIDGE NO.	ADDENDA AND REVISIONS	AR-01 SECTION
				COUNTY NEW CASTLE	DESIGNED BY: D. NIZAMOFF		SHEET NO. 3
					CHECKED BY: W. GESCHREI		

EXISTING SYMBOLS

DRAINAGE

—∞—	DITCH OR STREAM CENTERLINE
	DIRECTIONAL STREAM FLOW ARROW
C.B. / D.I.	DRAINAGE INLET
J.B.	DRAINAGE JUNCTION BOX
D	DRAINAGE MANHOLE
SIZE/TYPE LABEL	DRAINAGE PIPE AND FLOW ARROW
	DRAINAGE PIPE HEADWALL
	RIPRAP - AREA FEATURE
	RIPRAP - LINEAR FEATURE

MANMADE ROADSIDE FEATURES

	BOLLARD - STEEL POLE
	BOLLARD - WOOD POST
(TYPE LABEL)	CURB
(TYPE LABEL)	CURB AND GUTTER
	FENCE - CHAINLINK OR STRANDED
	FENCE - STOCKADE OR SPLIT RAIL
FP	FLAG POLE
	GUARDRAIL - STEEL BEAM
	GUARDRAIL - WIRE ROPE
LAMP	LAMP AND POST - RESIDENTIAL
MB	MAILBOX
PM	PARKING METER AND POST
	PAVEMENT - FLEXIBLE
	PAVEMENT - RIGID
	PILE - BRIDGE
	PILLAR OR MISCELLANEOUS POST
	TRAFFIC SIGN AND POST
	WALL - BRICK OR BLOCK
	WALL - STONE

NATURAL ROADSIDE FEATURES

	GRASS LAWN
	HEDGEROW OR THICKET
	MARSH BOUNDARY LINE
	TREE - CONIFEROUS
	TREE - DECIDUOUS
	TREE STUMP
	SHRUBBERY
—WL—	USACE WETLAND BOUNDARY
	WOODS LINE BOUNDARY
—SWM—	STATE MAPPED WETLAND

RIGHT-OF-WAY SYMBOLS

C.M.	PROPERTY MARKER - CONCRETE MON.
I.P.	PROPERTY MARKER - IRON PIPE
100+00	HISTORIC RIGHT-OF-WAY BASELINE
	EXISTING / RAILROAD RIGHT-OF-WAY
	EXISTING PROPERTY LINE
—EASEMENT TYPE—	EXISTING EASEMENT
—DA—	EXISTING DENIAL OF ACCESS
—R/W-DA—	EXISTING R/W & DENIAL OF ACCESS

SURVEY CONTROL & MONUMENTATION

B.M.	SURVEY BENCHMARK LOCATION
T.P.	SURVEY TIE POINT LOCATION
△	SURVEY TRAVERSE POINT
	POINT OF CURVATURE OR TANGENCY
	POINT OF INTERSECTING TANGENTS

UTILITY

	SOIL BORING LOCATION
	UTILITY TEST HOLE LOCATION
TV	CABLE TV DISTRIBUTION BOX
E	ELECTRIC MANHOLE
EM	ELECTRIC METER
E	ELECTRIC TRANSFORMER
	POLE MOUNTED LUMINAIRE
G	GAS MANHOLE
G.M.	GAS METER
G.V.	GAS VALVE
G.P.	GAS PUMP - SERVICE STATION
	RAILROAD TRACKS
S	SANITARY SEWER MANHOLE
S.V.	SANITARY SEWER VALVE
VENT	SANITARY SEWER VENT OR CLEANOUT
S.D.F.	SEPTIC DRAIN FIELD
B	TELEPHONE BOOTH
T	TELEPHONE MANHOLE
T	TELEPHONE TEST POINT
J.W.	TRAFFIC - CONDUIT JUNCTION WELL
	TRAFFIC - LIGHT POLE AND BASE
	TRAFFIC - PEDESTRIAN POLE & BASE
	TRAFFIC - SIGNAL CABINET & BASE
	TRAFFIC - SIGNAL POLE AND BASE
U	UTILITY BOX
	UTILITY POLE GUY WIRE ANCHOR
	UTILITY POLE
F.H.	WATER - FIRE HYDRANT
W.M.	WATER METER
W.V.	WATER VALVE
WELL	WELL HEAD
?	MANHOLE - UNDETERMINED OWNER
C	SEWER MANHOLE

UTILITY COMPANY FACILITIES

—AW-W (X)—	ARTESIAN WATER COMPANY
—CW-S (X)—	CITY OF WILMINGTON - SEWER
—CW-W (X)—	CITY OF WILMINGTON - WATER
—COM-C (X)—	COMCAST CABLE
—EX-CON (X)—	DELDOT MULTIDUCT CONDUIT - EXISTING
—EX-SIG (X)—	DELDOT SIGNAL CONDUIT - EXISTING
—DP-E (X)—	DELMARVA POWER - ELECTRIC
—DP-G (X)—	DELMARVA POWER - GAS
—VER-C (X)—	VERIZON

(X) REPRESENTS ASCE DEFINED SUE QUALITY LEVEL

PROPOSED SYMBOLS

CONSTRUCTION

	CONCRETE SAFETY BARRIER - PERMANENT
—BFS—	BIOFILTRATION SWALE
	BRICK PATTERNED SURFACE
	BUTT JOINT
100+00	CONSTRUCTION BASELINE
—CSF—	CONSTRUCTION SAFETY FENCE
	CURB, TYPE 1 & TYPE 3
	CURB, TYPE 2
	CURB & GUTTER, TYPE 1
	CURB & GUTTER, TYPE 2
	CURB & GUTTER, TYPE 3
	CURB & GUTTER, TYPE 4
—CZ—	CLEAR ZONE
	DRAINAGE INLET
	DITCH
	FENCE - METAL
	FENCE - WOOD
	FLARED END SECTION
	GUARDRAIL, TYPE 1
	GUARDRAIL, TYPE 2
	GUARDRAIL, TYPE 3
	GUARDRAIL END ANCHORAGE
	GUARDRAIL END TREATMENT, TYPE 1
	GUARDRAIL END TREATMENT, TYPE 2
	GUARDRAIL END TREATMENT, TYPE 3
	IMPACT ATTENUATOR
	JUNCTION BOX - DRAINAGE
—LO—	LATERAL OFFSET
—LOC—	LIMIT OF CONSTRUCTION
MB	MAILBOX
	MANHOLE
	PAVEMENT PATCH
	PAVEMENT REMOVAL - TOPSOIL, SEED AND MULCH
	PIPE & DIRECTIONAL FLOW ARROW
	RIPRAP
	P.C.C. SIDEWALK - 4"
	P.C.C. SIDEWALK - 6" (USE 8" DEPTH FOR CHANNELIZATION ISLANDS.)
	UNDERDRAIN
	UNDERDRAIN OUTLET

RIGHT-OF-WAY SYMBOLS

	PROPOSED RIGHT-OF-WAY MONUMENT
—DA—	PROPOSED DENIAL OF ACCESS
—PE—	PROPOSED PERMANENT EASEMENT
—R/W—	PROPOSED RIGHT-OF-WAY
—R/W-DA—	PROPOSED R/W & DENIAL OF ACCESS
—TCE—	TEMPORARY CONSTRUCTION EASEMENT
100+00	PROPOSED RIGHT-OF-WAY BASELINE

IDENTIFIERS

A/C	ADJUST BY CONTRACTOR
A/O	ADJUST BY OTHERS
B	CONCRETE SAFETY BARRIER
C	CURB OR CURB & GUTTER
CJB	CONVERT TO JUNCTION BOX
CMH	CONVERT TO DRAINAGE MANHOLE
C/O	CURB OPENING
PC	PEDSTRIAN CONNECTION / TYPE
PC-N	PEDESTRIAN CONNECTION / TYPE WITHOUT SIDEWALK SURFACE DETECTABLE WARNING SYSTEM
CSF	CONSTRUCTION SAFETY FENCE
DI	DRAINAGE INLET
DND	DO NOT DISTURB
ED	ENERGY DISSIPATOR
F	FENCE
FES	FLARED END SECTION
FF/C	FILL WITH FLOWABLE FILL
FS	FILTRATION STRUCTURE
GR	GUARDRAIL
JB	JUNCTION BOX
MH	MANHOLE
M	MONUMENT - RIGHT-OF-WAY
P	PIPE
RL/C	RELOCATE BY CONTRACTOR
RL/O	RELOCATE BY OTHERS
RM/C	REMOVE BY CONTRACTOR
RM/O	REMOVE BY OTHERS
UD	UNDERDRAIN / LENGTH
UD/C	UNDERDRAIN CONNECTION TO EXISTING PIPE
UDO	UNDERDRAIN OUTLET PIPE

LANDSCAPING

LS	LANDSCAPE PLANTINGS
	SHRUBBERY
	CONIFEROUS TREE
	DECIDUOUS TREE

TRAFFIC

—ITMS-CON—	ITMS CONDUIT
—SIG-CON—	SIGNAL CONDUIT
	CONDUIT JUNCTION WELL
	LUMINAIRE
	PAVEMENT MARKINGS
	PAVEMENT STRIPING
	TRAFFIC SIGN
—EX-CON—	EXISTING CONDUIT

PAVEMENT SECTION(S)

	OVERLAY PAVEMENT - SEE TYPICAL SECTIONS FOR MATERIALS AND DEPTHS
	12" PORTLAND CEMENT CONCRETE PAVEMENT 12" GRADED AGGREGATE BASE COURSE, TYPE B
	FULL DEPTH ASPHALT PAVEMENT - SEE TYPICAL SECTIONS FOR MATERIALS AND DEPTHS
	PAVEMENT REMOVAL OUTSIDE OF ROADWAY TEMPLATE

UTILITY COMPANY FACILITIES

—CW-S—	CITY OF WILMINGTON - SEWER

MISCELLANEOUS SYMBOLS

SDP	SLOTTED DRAIN PIPE
PL	PIPE LINING
©	MANHOLE - COMBINATION SEWER/SD
⊗R.T.M.S.	RADAR TRAFFIC MANAGMENT SENSOR
AB/C	ABANDON BY CONTRACTOR

UNOFFICIAL WEBSITE COPY

ADDENDA / REVISIONS

NOT TO SCALE

REHABILITATION OF I-95, 2ND STREET ON-RAMP IMPROVEMENTS

CONTRACT	T201907402
COUNTY	NEW CASTLE
BRIDGE NO.	
DESIGNED BY:	J. DAVIS
CHECKED BY:	B. TOWNSEND

LEGEND

LG-01

SECTION	WRA
SHEET NO.	4

N:\31987-004\Contract_Ramp_D\CADD\LG01.dgn
8/5/2019 9:29:09 AM

GENERAL NOTES

1. THIS PROJECT IS TO BE CONSTRUCTED IN ACCORDANCE WITH THE DELAWARE DEPARTMENT OF TRANSPORTATION "STANDARD SPECIFICATIONS", DATED AUGUST 2016 AND THE DELAWARE DEPARTMENT OF TRANSPORTATION "STANDARD CONSTRUCTION DETAILS", DATED 2016, INCLUDING ALL REVISIONS UP TO THE DATE OF ADVERTISEMENT.

2. ELECTRONIC PROJECT FILES THAT WILL BE MADE AVAILABLE TO THE AWARDED CONTRACTOR, INCLUDE:

( )	NONE
( )	ASCII DATA FILES WITH COORDINATES AND ELEVATIONS FOR PROPOSED POINTS AS SELECTED BY THE ENGINEER.
(X)	ALL PLAN SHEETS, IN PDF FORMAT.
( )	EXISTING DIGITAL TERRAIN MODEL, IN .DTM FILE FORMAT, COMPATIBLE WITH SOFTWARE CURRENTLY USED BY DELDOT.
( )	PROPOSED DIGITAL TERRAIN MODEL, IN .DTM FILE FORMAT, COMPATIBLE WITH SOFTWARE CURRENTLY USED BY DELDOT.
( )	DESIGN FILE, IN .DGN FILE FORMAT, CONTAINING ONLY THE PROPOSED 3D TRIANGLES OF THE PROPOSED DIGITAL TERRAIN MODEL (DTM).

NOTE: THE DOCUMENT ENTITLED "RELEASE FOR DELIVERY OF DOCUMENTS IN ELECTRONIC FORM TO A CONTRACTOR" MUST BE SIGNED BY ALL PARTIES PRIOR TO THE DELIVERY OF ANY ELECTRONIC PROJECT FILES.

3. PROJECT FILES THAT WILL BE MADE AVAILABLE TO THE CONTRACTOR, INCLUDE:

(X)	CROSS SECTIONS (WILL BE MADE AVAILABLE TO THE AWARDED CONTRACTOR)
( )	RIGHT-OF-WAY PLANS

PROJECT NOTES

SECTION 100

1. ANY DAMAGE TO ITEMS NOTED TO BE RELOCATED OR RESET BY THE CONTRACTOR, AT THE DISCRETION OF THE ENGINEER, SHALL BE REPAIRED AND/OR REPLACED IN KIND AT THE CONTRACTOR'S EXPENSE.

2. THE CONTRACTOR WILL CONTACT THE DELAWARE TMC AT 302-659-4600 PRIOR TO ANY UNMANNED AIRCRAFT VEHICLE (UAV) FLIGHTS. THE CONTRACTOR WILL BE REQUIRED TO PROVIDE THE FOLLOWING INFORMATION: THE REGISTRATION NUMBER OF THE UAV, THE FLIGHT TIME, LOCATION OF THE FLIGHT, THE PILOT'S NAME AND THE PILOT'S CONTACT NUMBER DURING THE FLIGHT.

SECTION 200

3. ALL OBJECTS WITHIN THE LOC NOT DESIGNATED AS "DND" (DO NOT DISTURB) OR DESIGNATED TO BE ADJUSTED, ABANDONED, CONVERTED (TO JUNCTION BOX/MANHOLE), OR RELOCATED, SHALL BE REMOVED BY THE CONTRACTOR. GUARDRAIL INCLUDING END TREATMENT ATTENUATORS, AND ATTACHMENTS TO STRUCTURES SHALL BE REMOVED UNDER ITEM 211002 - REMOVAL OF STRUCTURES AND OBSTRUCTIONS (GUARDRAIL). ITEMS TO BE REMOVED UNDER ITEM 211000 - REMOVAL OF STRUCTURES AND OBSTRUCTIONS SHALL INCLUDE, BUT NOT BE LIMITED TO, THE FOLLOWING:
   A. FENCES AND GATES
   B. PREVIOUSLY ABANDONED UTILITIES
   C. PREVIOUSLY ABANDONED SIGN STRUCTURE FOUNDATIONS

4. THE CONTRACTOR IS ADVISED THAT NOT ALL ITEMS TO BE REMOVED BY THE CONTRACTOR ARE IDENTIFIED ON THE PLANS. BARRIER TO BE REPLACED BY ANOTHER BARRIER OF THE SAME OR OF A DIFFERENT TYPE IN APPROXIMATELY THE SAME LOCATION, AND DRAINAGE STRUCTURES TO BE REPLACED BY DRAINAGE STRUCTURES OF THE SAME OR OF A DIFFERENT TYPE IN APPROXIMATELY THE SAME LOCATION, MAY NOT BE IDENTIFIED ON THE PLANS. THE CONTRACTOR SHALL REMOVE SUCH ITEMS WHEN IN CONFLICT WITH THE PROPOSED WORK. MEASUREMENT AND PAYMENT SHALL BE HANDLED AS SPECIFIED IN THE CONTRACT DOCUMENTS.

5. ALL EXISTING STORM SEWER MANHOLES, INLETS AND PIPES IN DIRECT CONFLICT WITH THE PROPOSED EXCAVATION SHALL BE REMOVED AND PAYMENT SHALL BE INCIDENTAL TO ITEM 202000 - EXCAVATION AND EMBANKMENT. ANY PIPES OR MANHOLES NOT IN DIRECT CONFLICT WITH PROPOSED EXCAVATION SHALL BE ABANDONED IN PLACE, BACKFILLED WITH FLOWABLE FILL AND PLUGGED IN ACCORDANCE WITH STANDARD DELDOT DETAILS.

SECTION 600

6. STATION AND ELEVATION DATA GIVEN FOR DRAINAGE STRUCTURES ARE TO BE APPLIED TO THE CENTER OF THE GRATE FOR INLETS, AND TO THE CENTER OF THE STRUCTURE FOR JUNCTION BOXES AND MANHOLES.

7. DRAINAGE INLET GRATES ADJACENT TO THE ROAD, WITHIN THE PROJECT LIMITS, WHICH ARE NOT TYPE 1 OR TYPE 4 SHALL BE REPLACED. THE ACTUAL LOCATIONS, THE NEED FOR ANY GRATE MODIFICATIONS OR FOR NEW FRAMES SHALL BE DETERMINED BY THE ENGINEER. ALL REPLACED GRATES/FRAMES SHALL BE DELIVERED TO THE NEAREST DISTRICT MAINTENANCE YARD WITH THE COST OF DELIVERY INCIDENTAL TO ITEM 602100 - REPLACE DRAINAGE INLET GRATE(S). FINAL PAYMENT FOR REPLACED GRATES/FRAMES SHALL NOT BE MADE UNTIL RECEIPT OF DELIVERED MATERIALS IS PRODUCED, SIGNED BY A DELDOT MAINTENANCE YARD SUPERVISOR.

SECTION 700

8. WHEN SAW CUTTING OF AN EXISTING COMPOSITE PAVEMENT SECTION IS REQUIRED, IT SHALL BE PAID UNDER ITEM 762001 - SAWCUTTING, CONCRETE, FULL DEPTH.

9. IN AREAS WHERE PROPOSED CURB MEETS EXISTING CURB AND THE TWO CURB TYPES ARE NOT SIMILAR, THE PROPOSED CURB SHALL BE TRANSITIONED IN 10 LINEAR FEET, UNLESS OTHERWISE DIRECTED BY THE ENGINEER. PAYMENT FOR THIS WORK, INCLUDING SAWCUTTING EXISTING CURB SHALL BE INCIDENTAL TO THE PROPOSED CURB ITEM.

10. WHERE PROPOSED CONCRETE SIDEWALK IS CONSTRUCTED TO MEET EXISTING SIDEWALK, THE EXISTING SIDEWALK SHALL BE SAWCUT AT THE TIE-IN POINT OR MEET THE NEAREST EXISTING SIDEWALK JOINT. ALL SAW CUTTING SHALL BE FULL DEPTH, UNLESS OTHERWISE NOTED ON THE PLANS OR DIRECTED BY THE ENGINEER AND SHALL BE PAID FOR UNDER ITEM 762001 - SAWCUTTING, CONCRETE, FULL DEPTH.

11. THE NEW CASTLE COUNTY DEPARTMENT OF PUBLIC WORKS SHALL SUPPLY AND THE STATE'S CONTRACTOR SHALL INSTALL NEW SELF SEALING MANHOLE FRAMES AND COVERS ON ALL COUNTY SEWER MANHOLES THAT ARE NOT BEING ADJUSTED, WITHIN THE PROJECT LIMITS IN ACCORDANCE WITH THE COUNTY'S STANDARD SPECIFICATIONS. THE EXISTING MANHOLE FRAMES AND COVERS THAT ARE REMOVED SHALL BECOME THE PROPERTY OF THE STATE'S CONTRACTOR. PAYMENT SHALL BE INCIDENTAL TO ITEM 711500 - ADJUST AND REPAIR EXISTING SANITARY SEWER MANHOLE.

12. THE CONTRACTOR SHALL DELIVER ALL EXCESS MILLED MATERIAL TO NORTH DISTRICT MAINTENANCE ON REGAL BLVD OR THE TALLEY YARD ON TALLEY ROAD. CONTACT NORTH DISTRICT MAINTENANCE AT 302-834-6307 TO COORDINATE DELIVERY. EXCESS BEYOND THE NEEDS OF THE DEPARTMENT SHALL BE DISPOSED OF BY THE CONTRACTOR. THE MATERIAL SHALL BE NEATLY STOCKPILED AT THE YARD. COSTS FOR THIS WORK SHALL BE INCIDENTAL TO ITEM 760010 - PAVEMENT MILLING, BITUMINOUS CONCRETE PAVEMENT.

13. ALL PAVED AREAS TO BE RECONSTRUCTED OR WIDENED SHALL BE SAWCUT AT THE POINT WHERE THE NEW PAVEMENT IS TO TIE INTO THE EXISTING PAVEMENT.

14. NO. 57 STONE SHALL BE SEPARATED FROM SOIL ON ALL SIDES USING A SEPARATION GEOTEXTILE, TO BE PAID AS ITEM 708002 - GEOTEXTILES, SEPARATION UNLESS OTHERWISE NOTED IN THE CONTRACT DOCUMENTS.

SECTION 900

15. THIS PROJECT IS COVERED UNDER AN NPDES GENERAL PERMIT FOR CONSTRUCTION. UNDER THE GENERAL PERMIT, COMPLIANCE WITH DELDOT'S APPROVED SEDIMENT AND STORMWATER MANAGEMENT PLANS WILL CONSTITUTE COMPLIANCE WITH THE NPDES INDUSTRIAL PERMITTING REQUIREMENTS FOR THIS CONSTRUCTION PROJECT. A COPY OF THE NPDES GENERAL PERMIT AND NOI IS KEPT ON FILE IN EACH OF THE CONSTRUCTION OFFICES AND THE DEPARTMENT'S STORMWATER SECTION. A COPY OF THE GENERAL PERMIT OR THE NOI CAN BE OBTAINED UPON REQUEST FROM EITHER THE DEPARTMENT'S STORMWATER ENGINEER OR THE APPROPRIATE CONSTRUCTION ENGINEER.

MISCELLANEOUS

16. THE CONTRACTOR SHALL NOTIFY DART FIRST STATE AT DOT_DETOURS@DELAWARE.GOV AT LEAST 14 DAYS PRIOR TO THE START OF ANY DETOURS OR CONSTRUCTION, AND DOT_DTC_PROJECTDEVELOPMENT@DELAWARE.GOV AT SUCH TIME THE FACILITY IS COMPLETED AND OPERABLE FOR TRANSIT OPERATIONS. FOR EMERGENCY DETOUR INFORMATION ONLY, PLEASE CONTACT DTC'S CHIEF SCHEDULER AT 302-576-6019.

17. ALL UTILITY FEATURES THAT FALL WITHIN THE LIMIT OF MILL AND OVERLAY ARE TO BE ADJUSTED BY CONTRACTOR, UNLESS OTHERWISE NOTED.

UNOFFICIAL WEBSITE COPY

	W Second Street	Adams Street	Jackson Street	Lancaster Avenue	Ramp B	Ramp D	
	ALL ALIGNMENTS	ALL ALIGNMENTS	ALL ALIGNMENTS	ALL ALIGNMENTS	ALL ALIGNMENTS	ALL ALIGNMENTS	PROJECT TOTALS
EXCAVATION - ITEM 202000 (CY) [NEED = '-' / EXCESS = '+']							
EX01 : FROM CROSS SECTIONS / MODELS (+)	209	72	340	371	133	526	1,651
EX02 : BITUMINOUS PAVEMENT REMOVED IN FILL SECTIONS (+)	0	0	19	16	23	2	60
EX03 : TOPSOIL REMOVED UNDER FILL SECTIONS (+)	0	2	11	3	0	70	86
EX04 : TOPSOIL PLACED IN CUT SECTIONS (+)	0	0	0	0	0	0	0
EX05 : ROOT MAT REMOVED IN CUT SECTIONS (-)	0	0	176	0	0	68	244
EX06 : CURB AND/OR CURB AND GUTTER EXCAVATION (-)	0	0	0	0	0	0	0
EX07 : UNDERDRAIN EXCAVATION (-)	0	0	0	0	0	0	0
EX08 : ROCK EXCAVATION (-)	0	0	0	0	0	0	0
EX09 : REMOVAL OF PCC PAVEMENT, CURBS, SIDEWALK, ETC. (-)	10	14	72	53	73	123	345
EXTOTAL : TOTAL EXCAVATION	199	60	122	337	83	407	1208
STORMWATER MANAGEMENT POND EXCAVATION - ITEM 910008 (CY) [NEED = '-' / EXCESS = '+']							
SWEX01 : FROM CROSS SECTIONS / MODELS (+)	0	0	0	0	0	0	0
SWEX02 : TOPSOIL REMOVED UNDER FILL SECTIONS (+)	0	0	0	0	0	0	0
SWEX03 : TOPSOIL PLACED IN CUT SECTIONS (+)	0	0	0	0	0	0	0
SWEX04 : ROOT MAT REMOVED (-)	0	0	0	0	0	0	0
SWEX05 : ROCK EXCAVATION (-)	0	0	0	0	0	0	0
SWEXTOTAL : TOTAL STORMWATER MANAGEMENT POND EXCAVATION	0	0	0	0	0	0	0
EXCAVATION AVAILABLE FOR EMBANKMENT (CY) [NEED = '-' / EXCESS = '+']							
EXTOTAL : TOTAL EXCAVATION (+) [ITEM 202000]	199	60	122	337	83	407	1,208
SWEXTOTAL : TOTAL STORMWATER MANAGEMENT POND EXCAVATION (+) [ITEM 910008]	0	0	0	0	0	0	0
AVEX01 : EXCAVATION AND BACKFILLING FOR STRUCTURES (+) [ITEM 207000]	0	4	0	30	0	0	34
AVEX02 : EXCAVATION FOR PIPE TRENCHES (+) [Item 601XXX)	0	0	0	0	0	0	0
AVEX03 : CHANNEL EXCAVATION (+) [ITEM 203000]	0	0	0	0	0	0	0
AVEX04 : POLE BASES EXCAVATION (+) [ITEM 834XXX]	0	0	0	0	0	0	0
AVEX05 : EXCAVATION FROM CURBS AND/OR CURB AND GUTTER (+)	0	0	0	0	0	0	0
AVEX06 : EXCAVATION FROM UNDERDRAINS (+) [ITEM 70900X]	0	0	0	0	0	0	0
AVEX07 : MISCELLANEOUS EXCAVATIONS (+)	0	0	0	0	0	0	0
AVEX08 : TOPSOIL REMOVED IN CUT AND/OR FILL SECTIONS (-)	47	14	31	26	6	160	284
AVEX09 : TOPSOIL REMOVED IN CUT AND/OR FILL SECTIONS FOR STORMWATER MANAGEMENT PONDS (-)	0	0	0	0	0	0	0
AVEX10: UNSUITABLE MATERIALS (-)	30	19	72	141	77	102	441
AVEXTOTAL : TOTAL EXCAVATION AVAILABLE FOR EMBANKMENT	122	31	19	200	0	145	517
EMBANKMENT AND BORROW, TYPE 'F' REQUIRED (CY) [NEED = '-' / EXCESS = '+']							
EMRF01 : FROM CROSS SECTIONS / MODEL (+) [EMBANKMENT REQUIRED BELOW SUBGRADE OR CAPPING]	2	3	55	11	25	111	207
EMRF02 : TOPSOIL REMOVED UNDER FILL (+)	0	2	11	3	0	70	86
EMRF03 : ROOT MAT REMOVED UNDER FILL (+)	0	0	149	0	0	50	199
EMRF04 : UNSUITABLE MATERIAL REMOVED UNDER FILL (+)	0	0	41	13	54	14	122
EMRF05 : PCC REMOVED UNDER FILL (+)	0	0	59	2	70	22	153
EMRF06 : BITUMINOUS PAVEMENT REMOVED UNDER FILL (+)	0	0	19	16	23	2	60
EMRF07 : TOPSOIL TO BE PLACED IN FILL (+)	0	0	0	0	0	0	0
EMRF08 : SUBTOTAL OF EMBANKMENT AND BORROW, TYPE 'F' REQUIRED	2	5	334	45	172	269	827
EMRF09 : COMPACTION FACTOR APPLIED TO THE SUBTOTAL (%)	1.2	1.2	1.2	1.2	1.2	1.2	1.2
EMRFTOTAL : TOTAL EMBANKMENT AND BORROW, TYPE 'F' REQUIRED	2	6	401	54	206	323	992
TOPSOIL SUMMARY (CY) [NEED = '-' / EXCESS = '+']							
TOP01 ; TOPSOIL SALVAGED FROM CUT SECTIONS (+)	47	12	20	23	6	90	198
TOP02 : TOPSOIL SALVAGED FROM FILL SECTIONS (+)	0	2	11	3	0	70	86
TOP03 : TOPSOIL SALVAGED FROM STORMWATER MANAGEMENT PONDS (+)	0	0	0	0	0	0	0
TOP04 : TOPSOIL REQUIRED (-)	16	6	107	14	55	116	314
TOPTOTAL : TOTAL TOPSOIL	31	8	-76	12	-49	44	-30
MATERIAL BALANCE (CY) [NEED = '-' / EXCESS = '+']							
BORROW, TYPE 'A'	0	0	0	0	0	0	0
BORROW, TYPE 'B'	0	0	0	0	0	0	0
BORROW, TYPE 'C'	0	0	0	0	0	0	0
BORROW, TYPE 'F'	120	25	-382	146	-206	-178	-475
TOPSOIL	31	8	-76	12	-49	44	-30
UNSUITABLE MATERIAL	30	19	72	141	77	102	441

UNOFFICIAL WEBSITE COPY

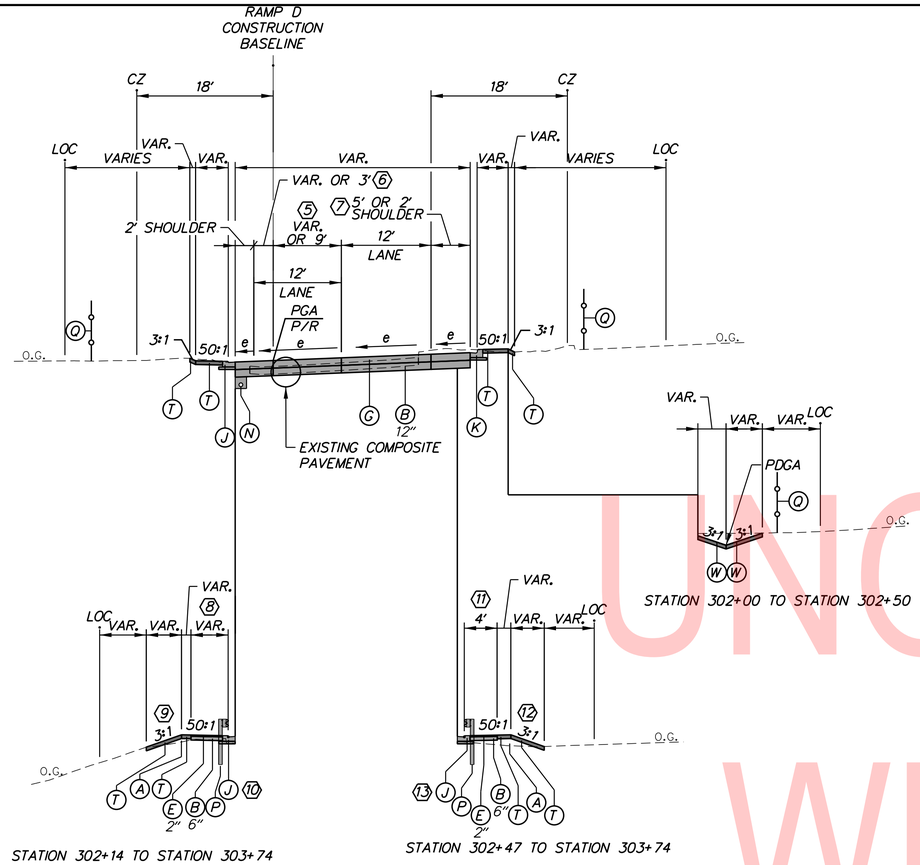

RAMP D SUPERELEVATED SECTION (Emax=4%)
STATION 301+97 TO STATION 303+74

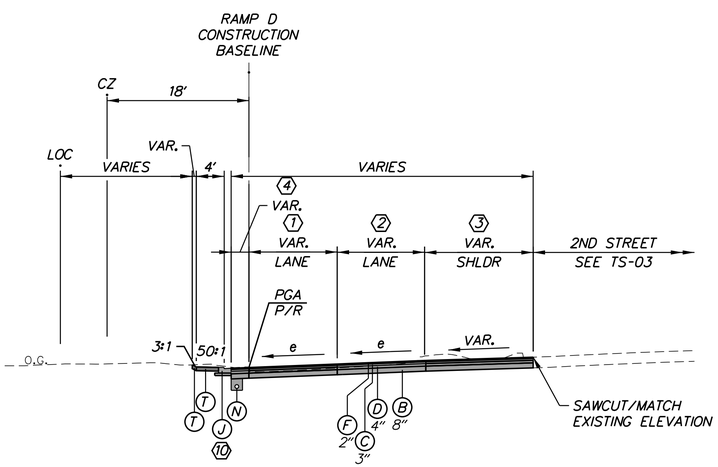

RAMP D SUPERELEVATED SECTION (Emax=4%)
STATION 301+42 TO STATION 301+97

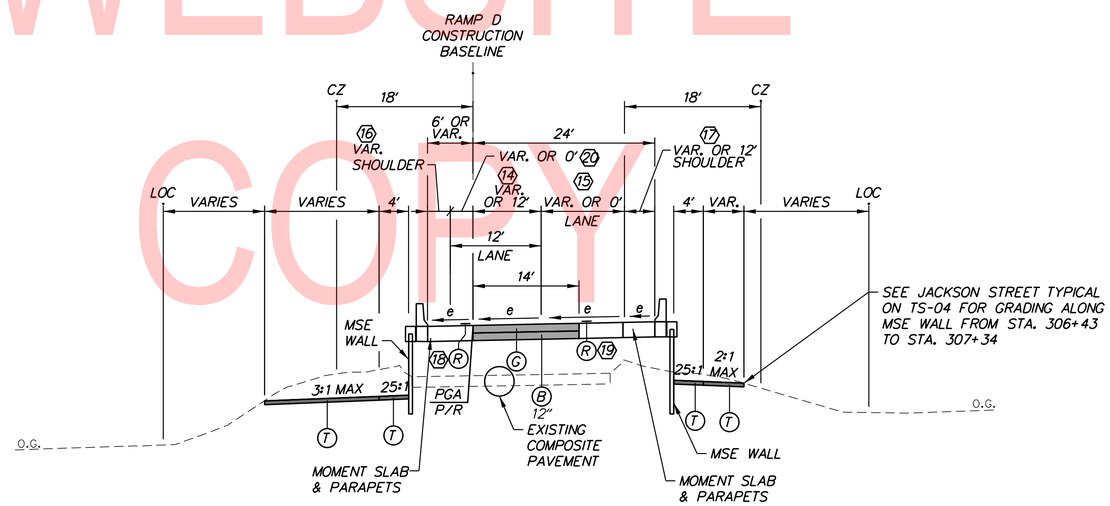

RAMP D SUPERELEVATED SECTION (Emax=5.6%)
STATION 303+74 TO STATION 304+21
STATION 305+29 TO STATION 308+74

NOTE: BR1-750 FROM STA. 304+21 TO STA. 305+29

NOTES:

1. PGA - POINT OF GRADE APPLICATION
   P/R - POINT OF ROTATION
   PDGA - POINT OF DITCH GRADE APPLICATION
2. ITEM 908020 - EROSION CONTROL BLANKET TO BE PLACED ON ALL NON-DITCH SLOPES 3:1 OR GREATER.
3. ITEM 908021 - TURF REINFORCEMENT MATTING, TYPE 1 TO BE PLACED ON ALL DITCH SLOPES TO A DEPTH OF 1' ON "V" DITCHES.

MATERIAL	LIFT THICKNESS	
	MINIMUM	MAXIMUM
BITUMINOUS CONCRETE, TYPE 'C'	1.25"	2"
BITUMINOUS CONCRETE, TYPE 'B'	2.25"	4"
BITUMINOUS CONCRETE BASE COURSE	3"	6"
GRADED AGGREGATE BASE COURSE	4"	8"

LEGEND

- (A) ITEM 209006 - BORROW, TYPE F
- (B) ITEM 301001 - GRADED AGGREGATE BASE COURSE, TYPE B
- (C) ITEM 401016 - SUPERPAVE TYPE B, PG 76-22
- (D) ITEM 401021 - SUPERPAVE BCBC, PG 64-22 (4" LIFTS MAX.)
- (E) ITEM 401045 - SUPERPAVE TYPE C, PG 70-22 (NON-CARBONATE STONE)
- (F) ITEM 401046 - SUPERPAVE TYPE C, PG 76-22 (NON-CARBONATE STONE)
- (G) ITEM 501006 - PORTLAND CEMENT CONCRETE PAVEMENT, 12"
- (H) ITEM 701013 - P.C.C. CURB, TYPE 1-8 ON 4" GRADED AGGREGATE BASE COURSE, TYPE B
- (J) ITEM 701020 - I.P.C.C. CURB AND GUTTER, TYPE 3-2 ON 4" GRADED AGGREGATE BASE COURSE, TYPE B
- (K) ITEM 701022 - I.P.C.C CURB AND GUTTER, TYPE 3-6 ON 4" GRADED AGGREGATE BASE COURSE, TYPE B
- (L) ITEM 701509 - CURB RETAINING WALL, TYPE 3
- (M) ITEM 705001 - PCC SIDEWALK, 4" ON 4" GRADED AGGREGATE BASE COURSE, TYPE B
- (N) ITEM 709001 - PERFORATED PIPE UNDERDRAINS, 6"
- (P) ITEM 720021 OR 720022 - GALVANIZED STEEL BEAM GUARDRAIL, TYPE 1-31 OR TYPE 2-31
- (Q) ITEM 727005 - DECORATIVE FENCE
- (R) ITEM 760007 - RUMBLE STRIPS, CONCRETE
- (S) ITEM 760010 - PAVEMENT MILLING, BITUMINOUS CONCRETE PAVEMENT
- (T) ITEM 908004 - TOPSOIL, 6" DEPTH
  ITEM 908014 - PERMANENT GRASS SEEDING, SUBDIVISION
  ITEM 908020 - EROSION CONTROL BLANKET
- (W) ITEM 908004 - TOPSOIL, 6" DEPTH
  ITEM 908014 - PERMANENT GRASS SEEDING, SUBDIVISION
  ITEM 908021 - TURF REINFORCEMENT MATTING, TYPE 1

⟨1⟩ WIDTH VARIES 11' TO 12' STA. 301+42 TO STA. 301+97

⟨2⟩ WIDTH VARIES 0' TO 12' STA. 301+42 TO STA. 301+97

⟨3⟩ WIDTH VARIES 0' TO 14' STA. 301+42 TO STA. 301+97

⟨4⟩ WIDTH VARIES 0.21' TO 2' STA. 301+42 TO STA. 301+97.

⟨5⟩ WIDTH VARIES 12' TO 9' STA. 301+97 TO STA. 302+73.

⟨6⟩ WIDTH VARIES FROM 0' TO 3' STA. 301+97 TO STA. 302+73.

⟨7⟩ WIDTH VARIES FROM 5' TO 2' STA. 302+73 TO STA. 303+41.

⟨8⟩ WIDTH VARIES 0' TO 5' STA. 302+14 TO STA. 303+21.
GUARDRAIL STA. 302+71 TO 303+74. REFER TO GUARDRAIL END TREATMENT STANDARD CONSTRUCTION DETAIL FOR GRADING AND MAINTENANCE PAVEMENT REQUIREMENTS

⟨9⟩ TRANSITION SLOPE 3:1 TO 2:1 STA. 303+21 TO STA 303+46.

⟨10⟩ TRANSITION I.P.C.C. CURB AND GUTTER TYPE 3-6 TO I.P.C.C. CURB AND GUTTER, TYPE 3-2 STA. 301+91 TO STA. 301+95.

⟨11⟩ WIDTH VARIES 0' TO 5' STA. 302+46 TO STA. 303+42.
GUARDRAIL STA. 302+92 TO 303+74. REFER TO GUARDRAIL END TREATMENT STANDARD CONSTRUCTION DETAIL FOR GRADING AND MAINTENANCE PAVEMENT REQUIREMENTS

⟨12⟩ TRANSITION SLOPE 3:1 TO 2:1 STA. 303+41 TO STA 303+66.

⟨13⟩ TRANSITION I.P.C.C. CURB AND GUTTER TYPE 3-6 TO I.P.C.C. CURB AND GUTTER, TYPE 3-2 STA. 302+12 TO STA. 302+16.

⟨14⟩ WIDTH VARIES 9' TO 12' STA. 303+74 TO STA. 305+73.

⟨15⟩ WIDTH VARIES 12' TO 0' STA. 303+74 TO STA. 305+73.

⟨16⟩ WIDTH VARIES 3' TO 6' STA. 303+74 TO STA. 305+51.
WIDTH VARIES 6' TO 11' STA. 305+51 TO STA. 306+08.
WIDTH VARIES FROM 11' TO 6' STA. 307+81 TO STA. 308+74.

⟨17⟩ WIDTH VARIES 3' TO 12' STA. 303+74 TO STA. 305+73.

⟨18⟩ RUMBLE STRIPS, CONCRETE FROM STA. 305+48 TO STA. 308+46.

⟨19⟩ RUMBLE STRIPS, CONCRETE FROM STA. 307+20 TO STA. 308+46.

⟨20⟩ WIDTH VARIES 3' TO 0' STA. 303+74 TO STA. 305+73.

UNOFFICIAL WEBSITE COPY

N:\31987-004\Contract_Ramp_D\CADD\TS01.dgn
9/5/2019 1:41:58 PM

ADDENDA / REVISIONS	NOT TO SCALE	REHABILITATION OF I-95, 2ND STREET ON-RAMP IMPROVEMENTS	CONTRACT T201907402	BRIDGE NO.	TYPICAL SECTIONS	TS-01
			COUNTY NEW CASTLE	DESIGNED BY: J. DAVIS		SECTION WRA
				CHECKED BY: B. TOWNSEND		SHEET NO. 7

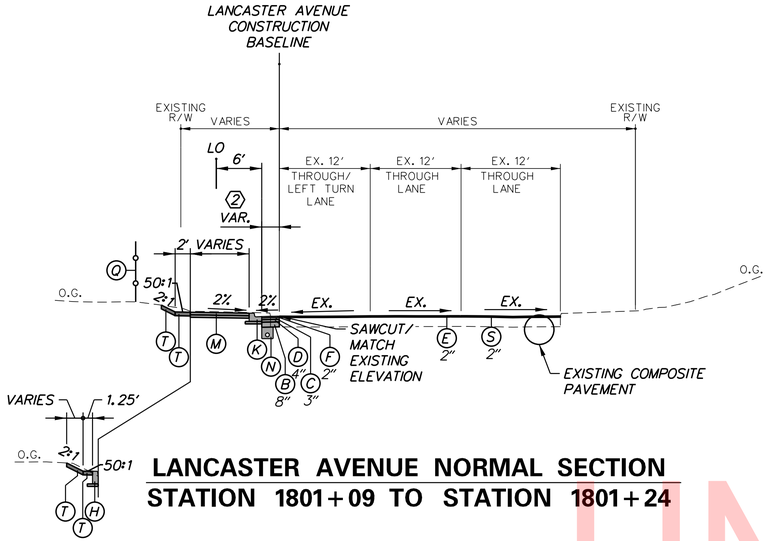

LANCASTER AVENUE NORMAL SECTION
STATION 1801+09 TO STATION 1801+24

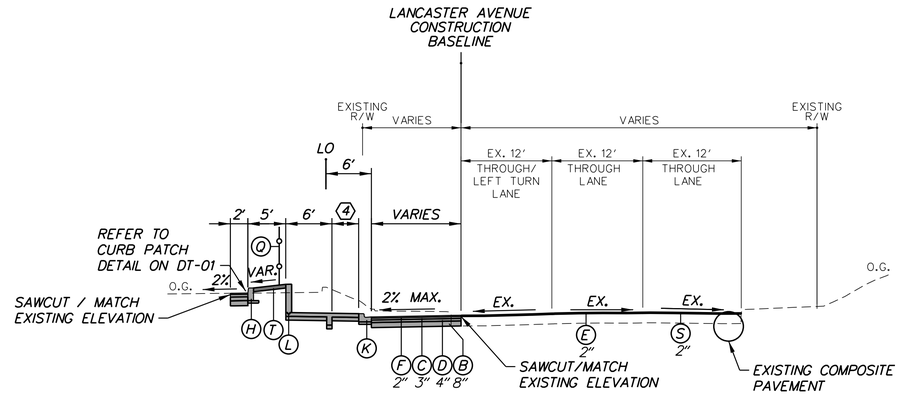

LANCASTER AVENUE NORMAL SECTION
STATION 1802+76 TO STATION 1803+18

STA. 1801+18 TO STA. 1801+24

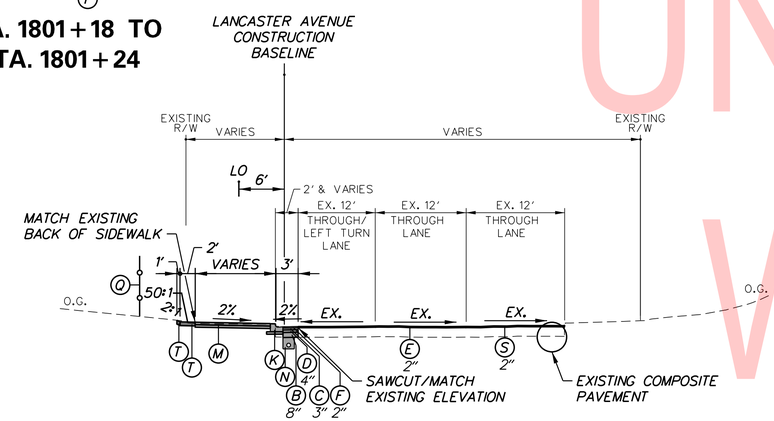

LANCASTER AVENUE NORMAL SECTION
STATION 1800+87 TO STATION 1801+09

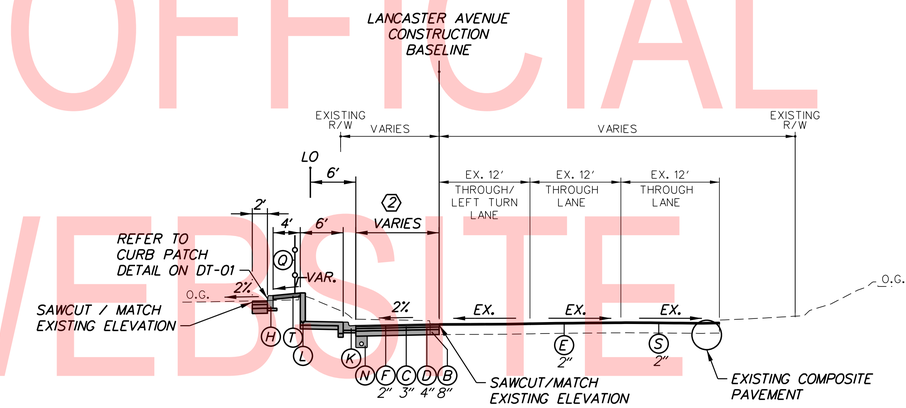

LANCASTER AVENUE NORMAL SECTION
STATION 1801+41 TO STATION 1802+76

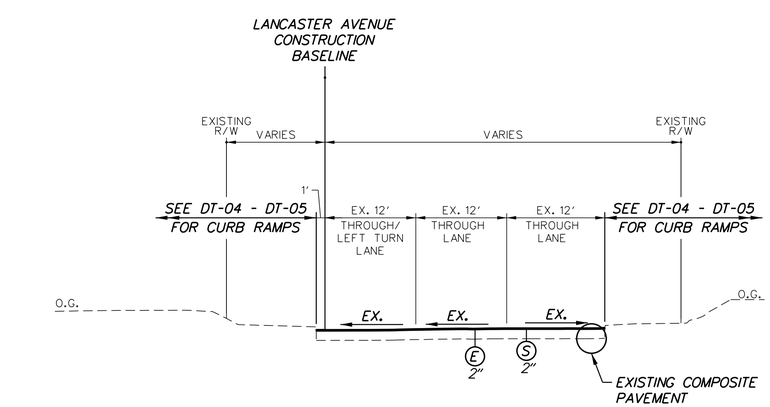

LANCASTER AVENUE NORMAL SECTION
STATION 1799+30 TO STATION 1800+87

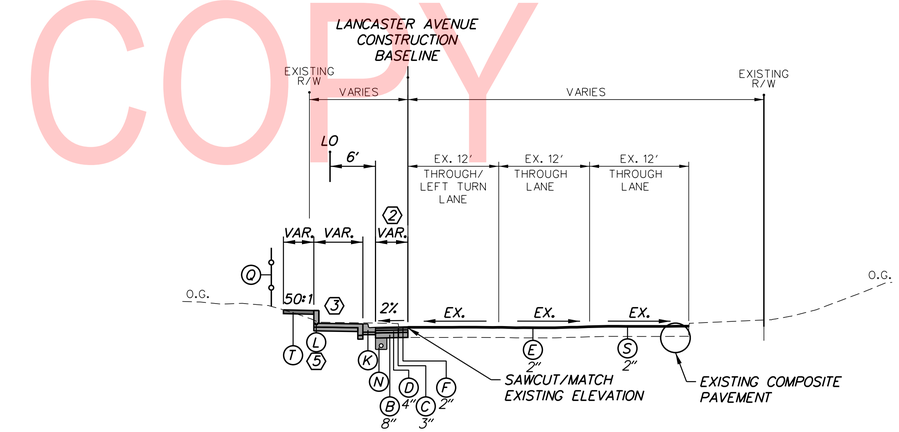

LANCASTER AVENUE NORMAL SECTION
STATION 1801+24 TO STATION 1801+41

LEGEND

- (A) ITEM 209006 - BORROW, TYPE F
- (B) ITEM 301001 - GRADED AGGREGATE BASE COURSE, TYPE B
- (C) ITEM 401016 - SUPERPAVE TYPE B, PG 76-22
- (D) ITEM 401021 - SUPERPAVE BCBC, PG 64-22 (4" LIFTS MAX.)
- (E) ITEM 401045 - SUPERPAVE TYPE C, PG 70-22 (NON-CARBONATE STONE)
- (F) ITEM 401046 - SUPERPAVE TYPE C, PG 76-22 (NON-CARBONATE STONE)
- (G) ITEM 501006 - PORTLAND CEMENT CONCRETE PAVEMENT, 12"
- (H) ITEM 701013 - P.C.C. CURB, TYPE 1-8 ON 4" GRADED AGGREGATE BASE COURSE, TYPE B
- (J) ITEM 701020 - I.P.C.C. CURB AND GUTTER, TYPE 3-2 ON 4" GRADED AGGREGATE BASE COURSE, TYPE B
- (K) ITEM 701022 - I.P.C.C CURB AND GUTTER, TYPE 3-6 ON 4" GRADED AGGREGATE BASE COURSE, TYPE B
- (L) ITEM 701509 - CURB RETAINING WALL, TYPE 3
- (M) ITEM 705001 - PCC SIDEWALK, 4" ON 4" GRADED AGGREGATE BASE COURSE, TYPE B
- (N) ITEM 709001 - PERFORATED PIPE UNDERDRAINS, 6"
- (P) ITEM 720021 OR 720022 - GALVANIZED STEEL BEAM GUARDRAIL, TYPE 1-31 OR TYPE 2-31
- (Q) ITEM 727005 - DECORATIVE FENCE
- (R) ITEM 760007 - RUMBLE STRIPS, CONCRETE
- (S) ITEM 760010 - PAVEMENT MILLING, BITUMINOUS CONCRETE PAVEMENT
- (T) ITEM 908004 - TOPSOIL, 6" DEPTH
  ITEM 908014 - PERMANENT GRASS SEEDING, SUBDIVISION
  ITEM 908020 - EROSION CONTROL BLANKET
- (W) ITEM 908004 - TOPSOIL, 6" DEPTH
  ITEM 908014 - PERMANENT GRASS SEEDING, SUBDIVISION
  ITEM 908021 - TURF REINFORCEMENT MATTING, TYPE 1

NOTES:

1. PGA - POINT OF GRADE APPLICATION
   P/R - POINT OF ROTATION
   PDGA - POINT OF DITCH GRADE APPLICATION
2. ITEM 908020 - EROSION CONTROL BLANKET TO BE PLACED ON ALL NON-DITCH SLOPES 3:1 OR GREATER.
3. ITEM 908021 - TURF REINFORCEMENT MATTING, TYPE 1 TO BE PLACED ON ALL DITCH SLOPES TO A DEPTH OF 1' ON "V" DITCHES.

MATERIAL	LIFT THICKNESS	
	MINIMUM	MAXIMUM
BITUMINOUS CONCRETE, TYPE 'C'	1.25"	2"
BITUMINOUS CONCRETE, TYPE 'B'	2.25"	4"
BITUMINOUS CONCRETE BASE COURSE	3"	6"
GRADED AGGREGATE BASE COURSE	4"	8"

(1) 2' FROM STA. 1800+87 TO STA. 1800+92, VARIES FROM 2' AT STA. 1800+12 TO STA. 1801+09.

(2) VARIES FROM 2' AT STA. 1801+09 TO 11' AT STA. 1801+92, 11' FROM STA. 1801+92 TO STA. 1802+71.

(3) CURB HEIGHT TRANSITIONS FROM 0" AT STA. 1801+18 TO 8" AT STA. 1801+24

(4) CURB RAMP FROM STA. 1802+90 TO STA. 1803+05.

(5) CURB RETAINING WALL HEIGHT TRANSITIONS FROM 8" AT STA 1801+24 TO 3'-9" AT STA. 1801+44.

UNOFFICIAL WEBSITE COPY

N:\31987-004\Contract_Ramp_D\CADD\TS02.dgn
9/5/2019 1:41:58 PM

ADDENDA / REVISIONS	

NOT TO SCALE

REHABILITATION OF I-95, 2ND STREET ON-RAMP IMPROVEMENTS

CONTRACT	BRIDGE NO.	
T201907402	DESIGNED BY: J. DAVIS	
COUNTY		
NEW CASTLE	CHECKED BY: B. TOWNSEND	

TYPICAL SECTIONS

TS-02
SECTION
WRA
SHEET NO.
8

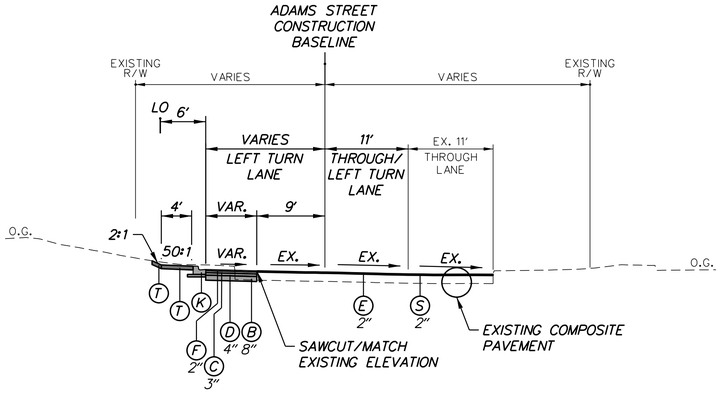

ADAMS STREET NORMAL SECTION
STATION 1703+07 TO STATION 1703+64

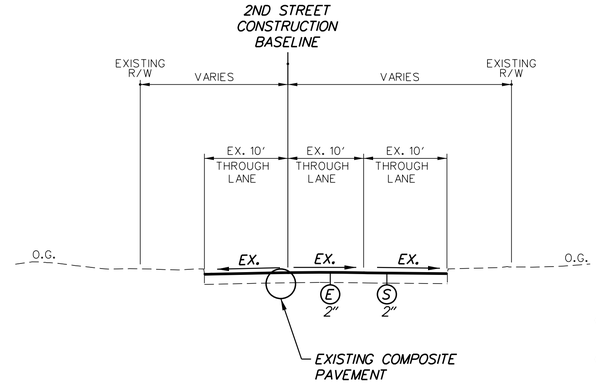

2ND STREET NORMAL SECTION
STATION 202+39 TO STATION 202+90

NOTES:

1. PGA - POINT OF GRADE APPLICATION
   P/R - POINT OF ROTATION
   PDGA - POINT OF DITCH GRADE APPLICATION
2. ITEM 908020 - EROSION CONTROL BLANKET TO BE PLACED ON ALL NON-DITCH SLOPES 3:1 OR GREATER.
3. ITEM 908021 - TURF REINFORCEMENT MATTING, TYPE 1 TO BE PLACED ON ALL DITCH SLOPES TO A DEPTH OF 1' ON "V" DITCHES.

MATERIAL	LIFT THICKNESS	
	MINIMUM	MAXIMUM
BITUMINOUS CONCRETE, TYPE 'C'	1.25"	2"
BITUMINOUS CONCRETE, TYPE 'B'	2.25"	4"
BITUMINOUS CONCRETE BASE COURSE	3"	6"
GRADED AGGREGATE BASE COURSE	4"	8"

(1) CURB HEIGHT TRANSITIONS FROM 8" AT STA. 1701+40 TO 0" AT STA. 1701+47.

(2) SLOPE VARIES FROM STA. 200+21 TO STA. 200+59. 2% SLOPE FROM STA. 200+59 TO STA. 201+18. TRANSITION FROM 2% SLOPE AT STA. 201+18 TO 2.88% AT STA. 201+67.

(3) CURB RETAINING WALL HEIGHT TRANSITIONS FROM 3'-9" AT STA. 1701+19 TO 8" AT STA. 1701+40.

LEGEND

- (A) ITEM 209006 - BORROW, TYPE F
- (B) ITEM 301001 - GRADED AGGREGATE BASE COURSE, TYPE B
- (C) ITEM 401016 - SUPERPAVE TYPE B, PG 76-22
- (D) ITEM 401021 - SUPERPAVE BCBC, PG 64-22 (4" LIFTS MAX.)
- (E) ITEM 401045 - SUPERPAVE TYPE C, PG 70-22 (NON-CARBONATE STONE)
- (F) ITEM 401046 - SUPERPAVE TYPE C, PG 76-22 (NON-CARBONATE STONE)
- (G) ITEM 501006 - PORTLAND CEMENT CONCRETE PAVEMENT, 12"
- (H) ITEM 701013 - P.C.C. CURB, TYPE 1-8 ON 4" GRADED AGGREGATE BASE COURSE, TYPE B
- (J) ITEM 701020 - I.P.C.C. CURB AND GUTTER, TYPE 3-2 ON 4" GRADED AGGREGATE BASE COURSE, TYPE B
- (K) ITEM 701022 - I.P.C.C CURB AND GUTTER, TYPE 3-6 ON 4" GRADED AGGREGATE BASE COURSE, TYPE B
- (L) ITEM 701509 - CURB RETAINING WALL, TYPE 3
- (M) ITEM 705001 - PCC SIDEWALK, 4" ON 4" GRADED AGGREGATE BASE COURSE, TYPE B
- (N) ITEM 709001 - PERFORATED PIPE UNDERDRAINS, 6"
- (P) ITEM 720021 OR 720022 - GALVANIZED STEEL BEAM GUARDRAIL, TYPE 1-31 OR TYPE 2-31
- (Q) ITEM 727005 - DECORATIVE FENCE
- (R) ITEM 760007 - RUMBLE STRIPS, CONCRETE
- (S) ITEM 760010 - PAVEMENT MILLING, BITUMINOUS CONCRETE PAVEMENT
- (T) ITEM 908004 - TOPSOIL, 6" DEPTH
  ITEM 908014 - PERMANENT GRASS SEEDING, SUBDIVISION
  ITEM 908020 - EROSION CONTROL BLANKET
- (W) ITEM 908004 - TOPSOIL, 6" DEPTH
  ITEM 908014 - PERMANENT GRASS SEEDING, SUBDIVISION
  ITEM 908021 - TURF REINFORCEMENT MATTING, TYPE 1

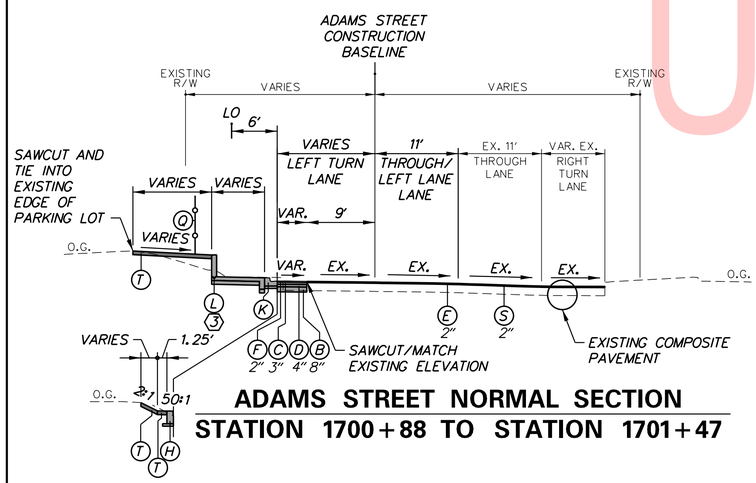

ADAMS STREET NORMAL SECTION
STATION 1700+88 TO STATION 1701+47

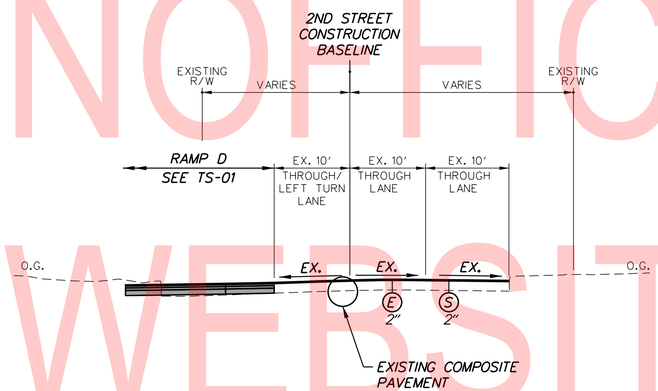

2ND STREET NORMAL SECTION
STATION 201+67 TO STATION 202+39

STA. 1701+40 TO STA. 1701+47

(1)

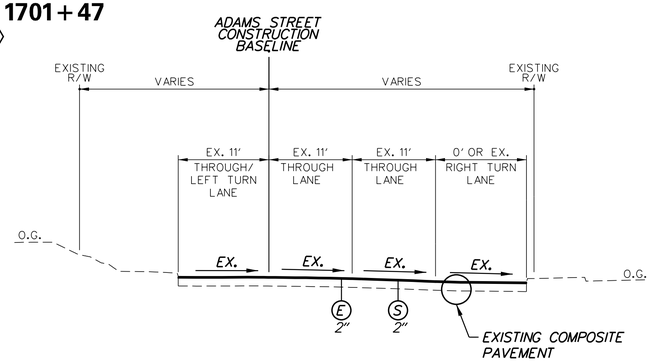

ADAMS STREET NORMAL SECTION
STATION 1700+50 TO STATION 1700+88
STATION 1701+47 TO STATION 1703+07
STATION 1703+64 TO STATION 1701+97

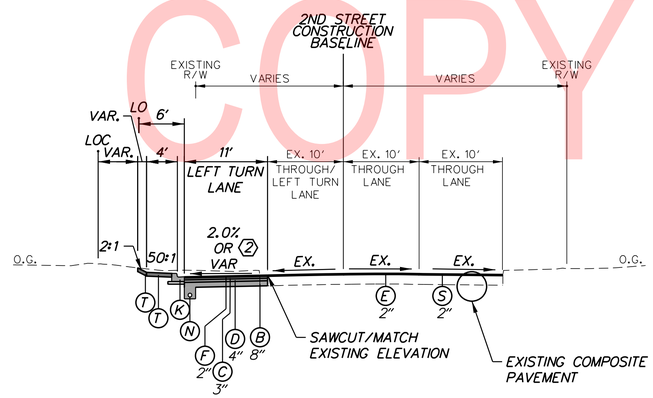

2ND STREET NORMAL SECTION
STATION 200+09 TO STATION 201+67

UNOFFICIAL WEBSITE COPY

ADDENDA / REVISIONS	NOT TO SCALE	REHABILITATION OF I-95, 2ND STREET ON-RAMP IMPROVEMENTS	CONTRACT T201907402	BRIDGE NO.	TYPICAL SECTIONS	TS-03 SECTION WRA
			COUNTY NEW CASTLE	DESIGNED BY: J. DAVIS		SHEET NO. 9
				CHECKED BY: B. TOWNSEND		

N:\31987-004\Contract_Ramp_D\CADD\TS03.dgn 8/5/2019 1:41:59 PM

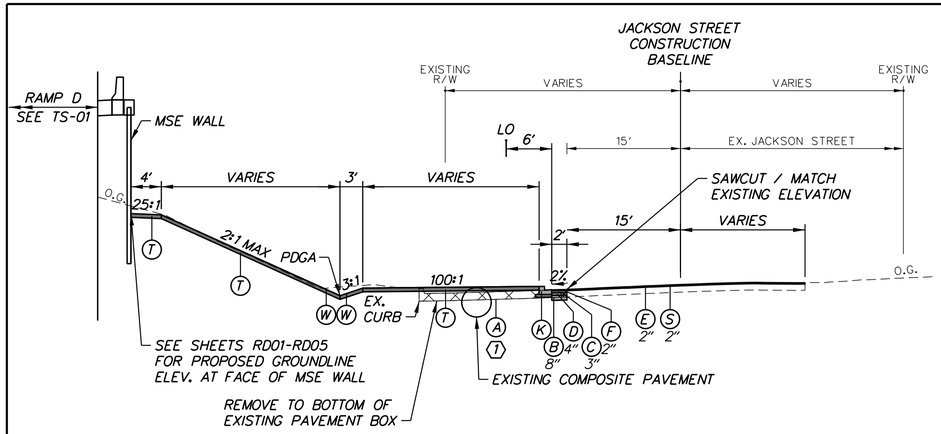

JACKSON STREET NORMAL SECTION
STATION 401+91 TO STATION 402+54

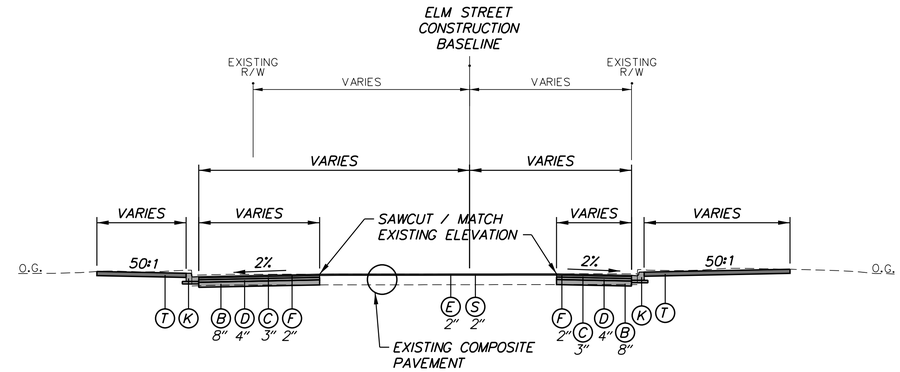

ELM STREET NORMAL SECTION
STATION 600+38 TO STATION 600+93

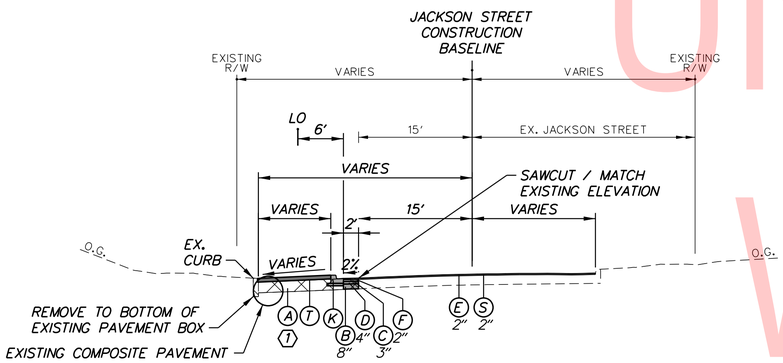

JACKSON STREET NORMAL SECTION
STATION 401+25 TO STATION 401+91

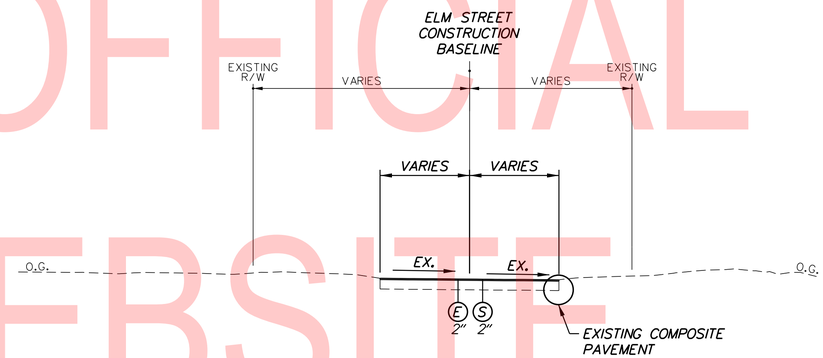

ELM STREET NORMAL SECTION
STATION 600+10 TO STATION 600+38

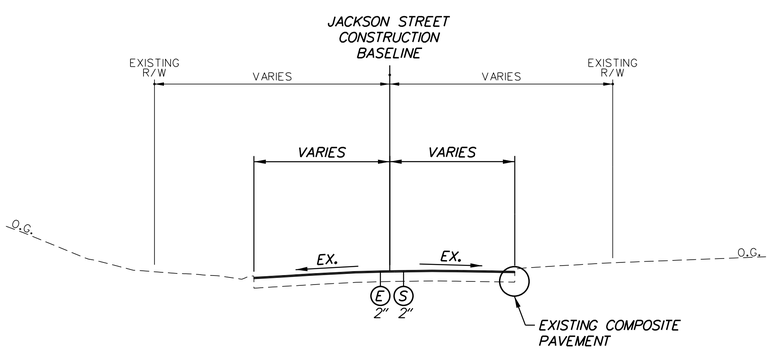

JACKSON STREET NORMAL SECTION
STATION 399+70 TO STATION 401+25

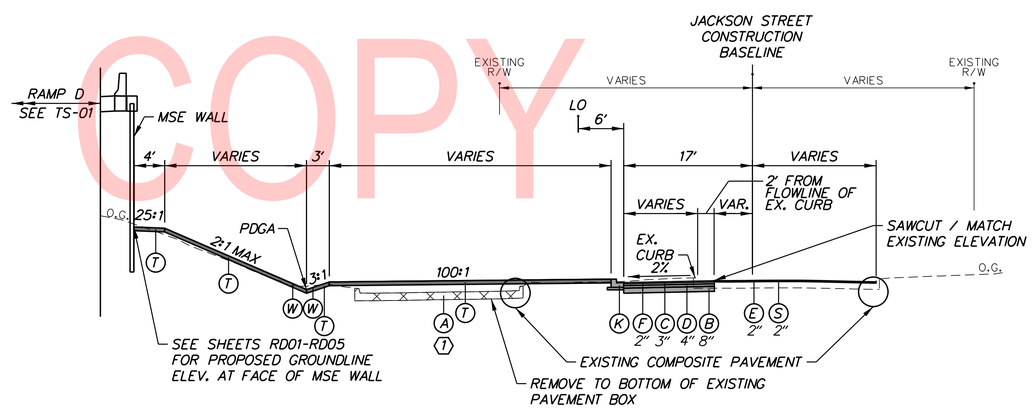

JACKSON STREET NORMAL SECTION
STATION 402+54 TO STATION 402+96

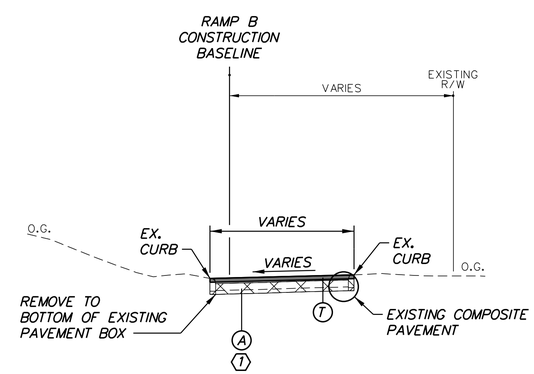

RAMP B NORMAL SECTION
STATION 501+47 TO STATION 503+11

LEGEND

- (A) ITEM 209006 - BORROW, TYPE F
- (B) ITEM 301001 - GRADED AGGREGATE BASE COURSE, TYPE B
- (C) ITEM 401016 - SUPERPAVE TYPE B, PG 76-22
- (D) ITEM 401021 - SUPERPAVE BCBC, PG 64-22 (4" LIFTS MAX.)
- (E) ITEM 401045 - SUPERPAVE TYPE C, PG 70-22 (NON-CARBONATE STONE)
- (F) ITEM 401046 - SUPERPAVE TYPE C, PG 76-22 (NON-CARBONATE STONE)
- (G) ITEM 501006 - PORTLAND CEMENT CONCRETE PAVEMENT, 12"
- (H) ITEM 701013 - P.C.C. CURB, TYPE 1-8 ON 4" GRADED AGGREGATE BASE COURSE, TYPE B
- (J) ITEM 701020 - I.P.C.C. CURB AND GUTTER, TYPE 3-2 ON 4" GRADED AGGREGATE BASE COURSE, TYPE B
- (K) ITEM 701022 - I.P.C.C CURB AND GUTTER, TYPE 3-6 ON 4" GRADED AGGREGATE BASE COURSE, TYPE B
- (L) ITEM 701509 - CURB RETAINING WALL, TYPE 3
- (M) ITEM 705001 - PCC SIDEWALK, 4" ON 4" GRADED AGGREGATE BASE COURSE, TYPE B
- (N) ITEM 709001 - PERFORATED PIPE UNDERDRAINS, 6"
- (P) ITEM 720021 OR 720022 - GALVANIZED STEEL BEAM GUARDRAIL, TYPE 1-31 OR TYPE 2-31
- (Q) ITEM 727005 - DECORATIVE FENCE
- (R) ITEM 760007 - RUMBLE STRIPS, CONCRETE
- (S) ITEM 760010 - PAVEMENT MILLING, BITUMINOUS CONCRETE PAVEMENT
- (T) ITEM 908004 - TOPSOIL, 6" DEPTH
  ITEM 908014 - PERMANENT GRASS SEEDING, SUBDIVISION
  ITEM 908020 - EROSION CONTROL BLANKET
- (W) ITEM 908004 - TOPSOIL, 6" DEPTH
  ITEM 908014 - PERMANENT GRASS SEEDING, SUBDIVISION
  ITEM 908021 - TURF REINFORCEMENT MATTING, TYPE 1

NOTES:

1. PGA - POINT OF GRADE APPLICATION
   P/R - POINT OF ROTATION
   PDGA - POINT OF DITCH GRADE APPLICATION
2. ITEM 908020 - EROSION CONTROL BLANKET TO BE PLACED ON ALL NON-DITCH SLOPES 3:1 OR GREATER.
3. ITEM 908021 - TURF REINFORCEMENT MATTING, TYPE 1 TO BE PLACED ON ALL DITCH SLOPES TO A DEPTH OF 1' ON "V" DITCHES.

MATERIAL	LIFT THICKNESS	
	MINIMUM	MAXIMUM
BITUMINOUS CONCRETE, TYPE 'C'	1.25"	2"
BITUMINOUS CONCRETE, TYPE 'B'	2.25"	4"
BITUMINOUS CONCRETE BASE COURSE	3"	6"
GRADED AGGREGATE BASE COURSE	4"	8"

(1) FILL FROM BACK OF EXISTING CURB TO BACK OF EXISTING CURB.

UNOFFICIAL WEBSITE COPY

N:\31987-004\Contract_Ramp_D\CADD\TS04.dgn
9/5/2019 1:42:01 PM

ADDENDA / REVISIONS	NOT TO SCALE	REHABILITATION OF I-95, 2ND STREET ON-RAMP IMPROVEMENTS	CONTRACT T201907402	BRIDGE NO.	TYPICAL SECTIONS	TS-04
			COUNTY NEW CASTLE	DESIGNED BY: J. DAVIS		SECTION WRA
				CHECKED BY: B. TOWNSEND		SHEET NO. 10

HORIZONTAL / VERTICAL CONTROL DATA

POINT	STATION	OFFSET	NORTHING	EASTING	ELEVATION
107	1285+14.05	-80.46'	632147.4453	614714.3201	8.85
55	1285+38.18	-47.92'	632155.3661	614761.3293	53.22
108	1288+30.30	104.65'	632321.7044	615051.9759	10.52
54	1292+19.31	-13.04'	632736.9646	615083.4984	61.70
110A	1295+80.36	-73.65'	633093.2614	615063.5391	24.36
110	1296+15.87	-173.02'	633130.5212	614964.6376	25.63
106	1297+86.76	-281.90'	633297.2902	614855.5120	29.58
72	1298+14.22	-78.92'	633325.5156	615058.3789	30.63
55A	1298+98.22	-189.10'	633409.0968	614947.8842	31.19

CONSTRUCTION ALIGNMENT CONTROL

POINT NO.	STATION	OFFSET	NORTHING	EASTING
10029	1281+46.74	0.00'	631818.4051	614558.6962

HV CONTROL LEGEND:

PHOTO - PAINTED TARGET WITH MAG NAIL IN MACADAM OR PUNCH MARK IN CONCRETE DECKING

RC - REBAR AND CAP SET

MAG - MAGNETIC NAIL SET

XCUT - '+' CUT IN CONCRETE SET

CMONU - SURVEY MONUMENT FOUND

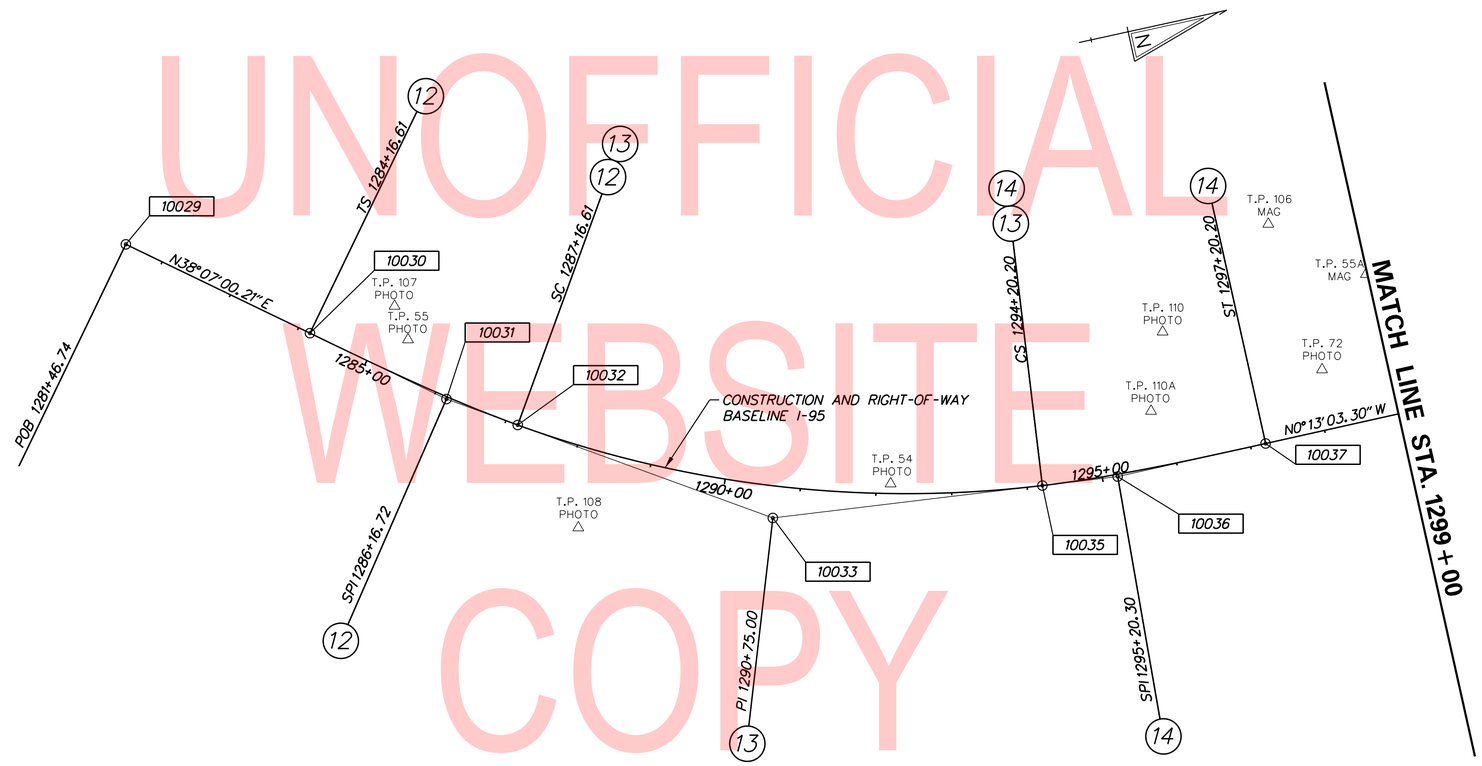

UNOFFICIAL WEBSITE COPY

DATUM REFERENCE:
HORIZONTAL - THIS PROJECT IS REFERENCED TO THE DELAWARE STATE PLANE COORDINATE SYSTEM (NAD 83/91).
VERTICAL - THIS PROJECT IS REFERENCED TO NAVD 88.

NOTES:
1. SEE SHEET HV-03 FOR CURVE DATA CHARTS.

ADDENDA / REVISIONS	

SCALE 0 100 200 300 FEET

REHABILITATION OF I-95, 2ND STREET ON-RAMP IMPROVEMENTS

CONTRACT	BRIDGE NO.	
T201907402	DESIGNED BY: J. DAVIS	
COUNTY		
NEW CASTLE	CHECKED BY: B. TOWNSEND	

HORIZONTAL AND VERTICAL CONTROL

HV-01
SECTION
WRA
SHEET NO.
11

N:\31987-004\Contract_Ramp_D\CADD\HV01.dgn
8/27/2019 3:14:18 PM

HORIZONTAL / VERTICAL CONTROL DATA

POINT NO.	STATION	OFFSET	NORTHING	EASTING	ELEVATION
113	1299+32.75	-119.38'	633443.8913	615017.4710	31.59
53	1299+87.06	-51.30'	633499.5597	615085.3697	61.42
143	1304+79.67	-104.94'	634013.3407	615084.0065	45.89
52	1305+79.76	-48.71'	634098.5591	615167.4477	61.10
141	1308+60.18	-151.96'	634407.9551	615189.2998	27.40
139	1312+27.96	-137.78'	634730.8744	615372.8034	32.85
51	1313+03.19	-49.80'	634756.3777	615485.7130	62.78
135	1319+11.03	-112.64'	635323.3554	615713.6484	52.50

CONSTRUCTION ALIGNMENT CONTROL

POINT NO.	STATION	OFFSET	NORTHING	EASTING
13014	1315+00.00	0.00'	634907.2411	615621.5653
10046	1319+15.37	0.00'	635274.6561	615815.3141
11027	314+68.68	0.00'	633437.3439	615092.8786
11030	1799+00.00	0.00'	634502.4579	615117.3182
11031	1803+26.58	0.00'	634302.7448	615494.2645
11035	200+00.00	0.00'	634558.6859	615629.5179
11036	203+26.95	0.00'	634711.5515	615340.5088
11040	1700+00.00	0.00'	634225.9209	615453.6666
11041	1704+47.44	0.00'	634621.5218	615662.7239
11042	400+00.00	0.00'	634464.4706	615189.0168
11043	403+00.00	0.00'	634199.3479	615048.6248
11051	600+00.00	0.00'	633814.0509	615019.9119
11052	600+93.31	0.00'	633770.8754	615102.6282

HV CONTROL LEGEND:

PHOTO - PAINTED TARGET WITH MAG NAIL IN MACADAM OR PUNCH MARK IN CONCRETE DECKING

RC - REBAR AND CAP SET

MAG - MAGNETIC NAIL SET

XCUT - '+' CUT IN CONCRETE SET

CMONU - SURVEY MONUMENT FOUND

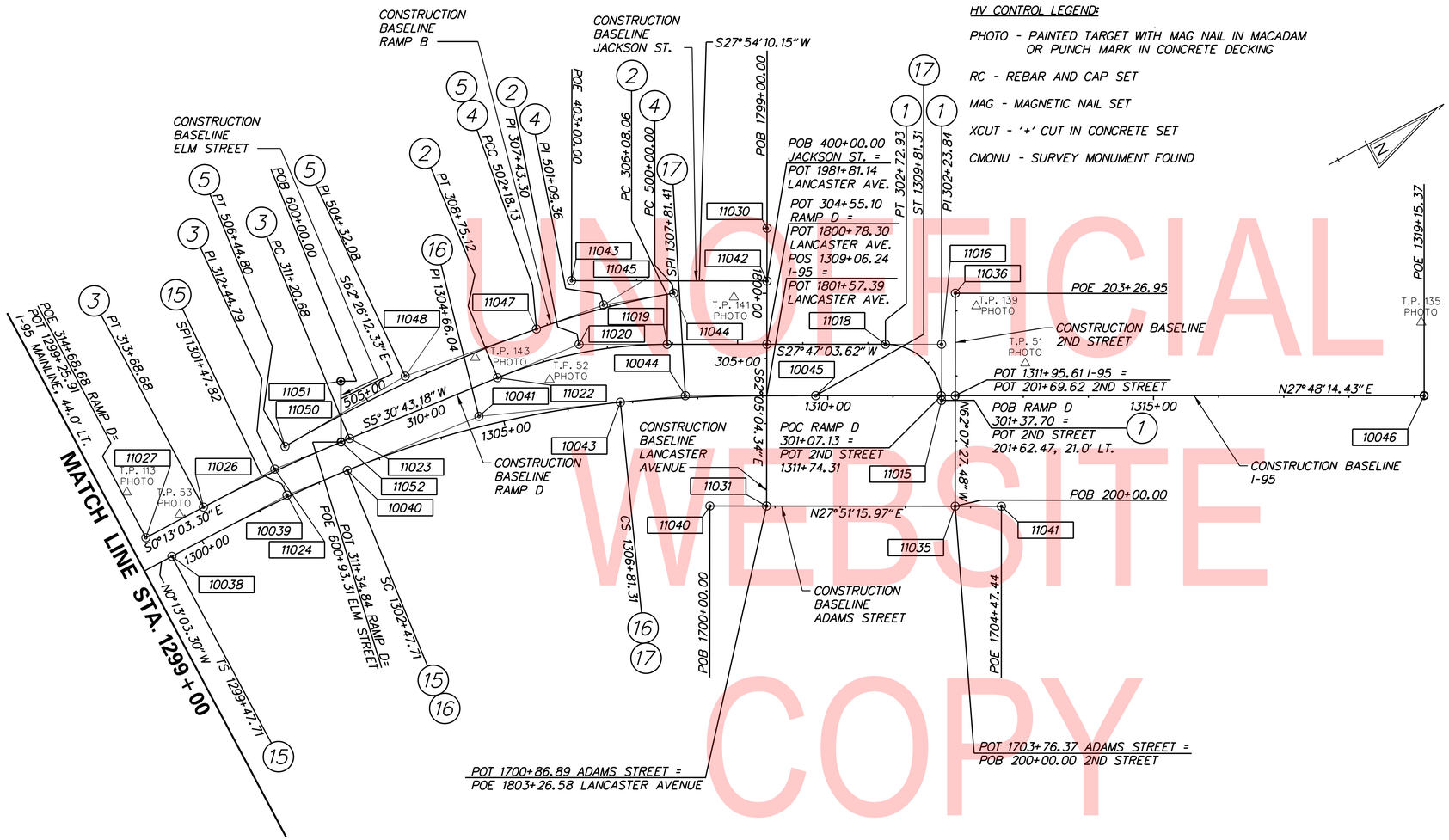

UNOFFICIAL WEBSITE COPY

DATUM REFERENCE:
HORIZONTAL - THIS PROJECT IS REFERENCED TO THE DELAWARE STATE PLANE COORDINATE SYSTEM (NAD 83/91).
VERTICAL - THIS PROJECT IS REFERENCED TO NAVD 88.

NOTES:
1. SEE SHEETS HV-03 AND HV-04 FOR CURVE DATA CHARTS.

ADDENDA / REVISIONS	

SCALE 0 100 200 300 FEET

REHABILITATION OF I-95, 2ND STREET ON-RAMP IMPROVEMENTS

CONTRACT	BRIDGE NO.	
T201907402	DESIGNED BY: J. DAVIS	
COUNTY		
NEW CASTLE	CHECKED BY: B. TOWNSEND	

HORIZONTAL AND VERTICAL CONTROL

HV-02

SECTION	SHEET NO.
WRA	12

N:\31987-004\Contract_Ramp_D\CADD\HV02.dgn
8/27/2019 3:14:18 PM

CLOTHOID CURVE NO. 12 – I-95 MAINLINE

	STATION	NORTHING	EASTING
Element: Clothoid			
TS (10030)	1284+16.61	632030.7298	614725.2802
SPI (10031)	1286+16.72	632188.1633	614848.7980
SC (10032)	1287+16.61	632272.6886	614902.4128
Entrance Radius:	0.00		
Exit Radius:	1500.00		
Length:	300.00		
Angle:	5° 43′ 46.4806″ Left		
Constant:	670.82		
Long Tangent:	200.10		
Short Tangent:	100.10		
Long Chord:	299.87		
Xs:	299.70		
Ys:	9.99		
P:	2.50		
K:	149.95		
Tangent Direction:	N 38° 07′ 00.2055″ E		
Radial Direction:	S 51° 52′ 59.7945″ E		
Chord Direction:	N 36° 12′ 25.2942″ E		
Radial Direction:	S 57° 36′ 46.2751″ E		
Tangent Direction:	N 32° 23′ 13.7249″ E		

CIRCULAR CURVE NO. 13 – I-95 MAINLINE

	STATION	NORTHING	EASTING
Element: Circular			
SC (10032)	1287+16.61	632272.6886	614902.4128
PI (10033)	1290+75.00	632575.3305	615094.3800
CC (10034)		633076.1447	613635.7407
CS (10035)	1294+20.20	632932.0634	615128.8048
Radius:	1500.00		
Delta:	26° 52′ 30.5407″ Left		
Degree of Curvature(Arc):	3° 49′ 10.9871″		
Length:	703.59		
Tangent:	358.39		
Chord:	697.16		
Middle Ordinate:	41.06		
External:	42.22		
Tangent Direction:	N 32° 23′ 13.7249″ E		
Radial Direction:	S 57° 36′ 46.2751″ E		
Chord Direction:	N 18° 56′ 58.4546″ E		
Radial Direction:	S 84° 29′ 16.8158″ E		
Tangent Direction:	N 5° 30′ 43.1842″ E		

CLOTHOID CURVE NO. 14 – I-95 MAINLINE

	STATION	NORTHING	EASTING
Element: Clothoid			
CS (10035)	1294+20.20	632932.0634	615128.8048
SPI (10036)	1295+20.30	633031.6960	615138.4194
ST (10037)	1297+20.20	633231.7994	615137.6595
Entrance Radius:	1500.00		
Exit Radius:	0.00		
Length:	300.00		
Angle:	5° 43′ 46.4806″ Left		
Constant:	670.82		
Long Tangent:	200.10		
Short Tangent:	100.10		
Long Chord:	299.87		
Xs:	299.70		
Ys:	9.99		
P:	2.50		
K:	149.95		
Tangent Direction:	N 5° 30′ 43.1842″ E		
Radial Direction:	S 84° 29′ 16.8158″ E		
Chord Direction:	N 1° 41′ 31.6149″ E		
Radial Direction:	N 89° 46′ 56.7036″ E		
Tangent Direction:	N 0° 13′ 03.2964″ W		

CLOTHOID CURVE NO. 15 – I-95 MAINLINE

	STATION	NORTHING	EASTING
Element: Clothoid			
TS (10038)	1299+47.71	633459.3076	615136.7955
SPI (10039)	1301+47.82	633659.4110	615136.0356
SC (10040)	1302+47.71	633759.0435	615145.6502
Entrance Radius:	0.00		
Exit Radius:	1500.00		
Length:	300.00		
Angle:	5° 43′ 46.4806″ Right		
Constant:	670.82		
Long Tangent:	200.10		
Short Tangent:	100.10		
Long Chord:	299.87		
Xs:	299.70		
Ys:	9.99		
P:	2.50		
K:	149.95		
Tangent Direction:	N 0° 13′ 03.2964″ W		
Radial Direction:	N 89° 46′ 56.7036″ E		
Chord Direction:	N 1° 41′ 31.6149″ E		
Radial Direction:	S 84° 29′ 16.8158″ E		
Tangent Direction:	N 5° 30′ 43.1842″ E		

CIRCULAR CURVE NO. 16 – I-95 MAINLINE

	STATION	NORTHING	EASTING
Element: Circular			
SC (10040)	1302+47.71	633759.0435	615145.6502
PI (10041)	1304+66.04	633976.3581	615166.6211
CC (10042)		633614.9623	616638.7144
CS (10043)	1306+81.31	634178.6784	615248.6697
Radius:	1500.00		
Delta:	16° 33′ 44.7653″ Right		
Degree of Curvature(Arc):	3° 49′ 10.9871″		
Length:	433.60		
Tangent:	218.32		
Chord:	432.10		
Middle Ordinate:	15.64		
External:	15.81		
Tangent Direction:	N 5° 30′ 43.1842″ E		
Radial Direction:	S 84° 29′ 16.8158″ E		
Chord Direction:	N 13° 47′ 35.5668″ E		
Radial Direction:	S 67° 55′ 32.0505″ E		
Tangent Direction:	N 22° 04′ 27.9495″ E		

CLOTHOID CURVE NO. 17 – I-95 MAINLINE

	STATION	NORTHING	EASTING
Element: Clothoid			
CS (10043)	1306+81.31	634178.6784	615248.6697
SPI (10044)	1307+81.41	634271.4364	615286.2866
ST (10045)	1309+81.31	634448.4388	615379.6252
Entrance Radius:	1500.00		
Exit Radius:	0.00		
Length:	300.00		
Angle:	5° 43′ 46.4806″ Right		
Constant:	670.82		
Long Tangent:	200.10		
Short Tangent:	100.10		
Long Chord:	299.87		
Xs:	299.70		
Ys:	9.99		
P:	2.50		
K:	149.95		
Tangent Direction:	N 22° 04′ 27.9495″ E		
Radial Direction:	S 67° 55′ 32.0505″ E		
Chord Direction:	N 25° 53′ 39.5187″ E		
Radial Direction:	S 62° 11′ 45.5699″ E		
Tangent Direction:	N 27° 48′ 14.4301″ E		

CIRCULAR CURVE NO. 1 – RAMP D

	STATION	NORTHING	EASTING
Element: Circular			
PC (11015)	301+37.7038	634616.0870	615476.0804
PI (11016)	302+23.8410	634656.3609	615399.9381
CC (11017)		634540.0661	615435.8706
PT (11018)	302+72.9294	634580.1546	615359.7857
Radius:	86.00		
Delta:	90° 05′ 28.9002″ Left		
Degree of Curvature(Arc):	66° 37′ 22.7980″		
Length:	135.23		
Tangent:	86.14		
Chord:	121.72		
Middle Ordinate:	25.24		
External:	35.72		
Tangent Direction:	N 62° 07′ 27.4785″ W		
Radial Direction:	N 27° 52′ 32.5216″ E		
Chord Direction:	S 72° 49′ 48.0714″ W		
Radial Direction:	N 62° 12′ 56.3787″ W		
Tangent Direction:	S 27° 47′ 03.6213″ W		

CIRCULAR CURVE NO. 2 – RAMP D

	STATION	NORTHING	EASTING
Element: Circular			
PC (11019)	306+08.0637	634283.6584	615203.5646
PI (11020)	307+43.2982	634164.0153	615140.5257
CC (11021)		633963.4169	615811.3593
PT (11022)	308+75.1183	634029.4061	615127.5359
Radius:	687.00		
Delta:	22° 16′ 20.4372″ Left		
Degree of Curvature(Arc):	8° 20′ 23.9894″		
Length:	267.05		
Tangent:	135.23		
Chord:	265.38		
Middle Ordinate:	12.94		
External:	13.18		
Tangent Direction:	S 27° 47′ 03.6213″ W		
Radial Direction:	N 62° 12′ 56.3787″ W		
Chord Direction:	S 16° 38′ 53.4028″ W		
Radial Direction:	N 84° 29′ 16.8158″ W		
Tangent Direction:	S 5° 30′ 43.1841″ W		

CIRCULAR CURVE NO. 3 – RAMP D

	STATION	NORTHING	EASTING
Element: Circular			
PC (11023)	311+20.6846	633784.9753	615103.9482
PI (11024)	312+44.7880	633661.4457	615092.0276
CC (11025)		633546.7610	617572.4810
PT (11026)	313+68.6846	633537.3432	615092.4989
Radius:	2480.00		
Delta:	5° 43′ 46.4806″ Left		
Degree of Curvature(Arc):	2° 18′ 37.1294″		
Length:	248.00		
Tangent:	124.10		
Chord:	247.90		
Middle Ordinate:	3.10		
External:	3.10		
Tangent Direction:	S 5° 30′ 43.1841″ W		
Radial Direction:	N 84° 29′ 16.8158″ W		
Chord Direction:	S 2° 38′ 49.9438″ W		
Radial Direction:	S 89° 46′ 56.7035″ W		
Tangent Direction:	S 0° 13′ 03.2965″ E		

UNOFFICIAL WEBSITE COPY

NOTES:
1. SEE SHEETS HV-01 & HV-02 FOR BASELINES.

ADDENDA / REVISIONS		NOT TO SCALE	REHABILITATION OF I-95, 2ND STREET ON-RAMP IMPROVEMENTS	CONTRACT T201907402	BRIDGE NO.	HORIZONTAL AND VERTICAL CONTROL	HV-03
				COUNTY NEW CASTLE	DESIGNED BY: J. DAVIS		SECTION WRA
					CHECKED BY: B. TOWNSEND		SHEET NO. 13

N:\31987-004\Contract_Ramp_D\CADD\HV03.dgn 8/27/2019 3:14:19 PM

CIRCULAR CURVE NO. 4 – RAMP B

		STATION	NORTHING	EASTING
Element: Circular				
PC	(11044)	500+00.0000	634329.2351	615138.7248
PI	(11045)	501+09.3553	634225.3790	615104.4829
CC	(11046)		633945.0299	616304.0211
PCC	(11047)	502+18.1344	634117.1044	615089.1469

Radius:	1227.00
Delta:	10° 11′ 09.4710″ Left
Degree of Curvature(Arc):	4° 40′ 10.4978″
Length:	218.13
Tangent:	109.36
Chord:	217.85
Middle Ordinate:	4.84
External:	4.86
Tangent Direction:	S 18° 14′ 51.7209″ W
Radial Direction:	N 71° 45′ 08.2790″ W
Chord Direction:	S 13° 09′ 16.9854″ W
Radial Direction:	N 81° 56′ 17.7500″ W
Tangent Direction:	S 8° 03′ 42.2500″ W

CIRCULAR CURVE NO. 5 – RAMP B

		STATION	NORTHING	EASTING
Element: Circular				
PCC	(11047)	502+18.1344	634117.1044	615089.1469
PI	(11048)	504+32.0763	633905.2768	615059.1437
CC	(11049)		633792.8694	617378.2986
PT	(11050)	506+44.8031	633691.5404	615068.5202

Radius:	2312.0000
Delta:	10° 34′ 25.2026″ Left
Degree of Curvature(Arc):	2° 28′ 41.4881″
Length:	426.67
Tangent:	213.94
Chord:	426.06
Middle Ordinate:	9.84
External:	9.88
Tangent Direction:	S 8° 03′ 42.2500″ W
Radial Direction:	N 81° 56′ 17.7500″ W
Chord Direction:	S 2° 46′ 29.6487″ W
Radial Direction:	S 87° 29′ 17.0474″ W
Tangent Direction:	S 2° 30′ 42.9526″ E

UNOFFICIAL WEBSITE COPY

NOTES:
1. SEE SHEET HV-02 FOR BASELINE.

HV–04

ADDENDA / REVISIONS	NOT TO SCALE	REHABILITATION OF I-95, 2ND STREET ON-RAMP IMPROVEMENTS	CONTRACT T201907402	BRIDGE NO.	HORIZONTAL AND VERTICAL CONTROL	SECTION WRA
			COUNTY NEW CASTLE	DESIGNED BY: J. DAVIS		SHEET NO. 14
				CHECKED BY: B. TOWNSEND		

N:\31987-004\Contract_Ramp_D\CADD\HV04.dgn
8/27/2019 3:14:20 PM

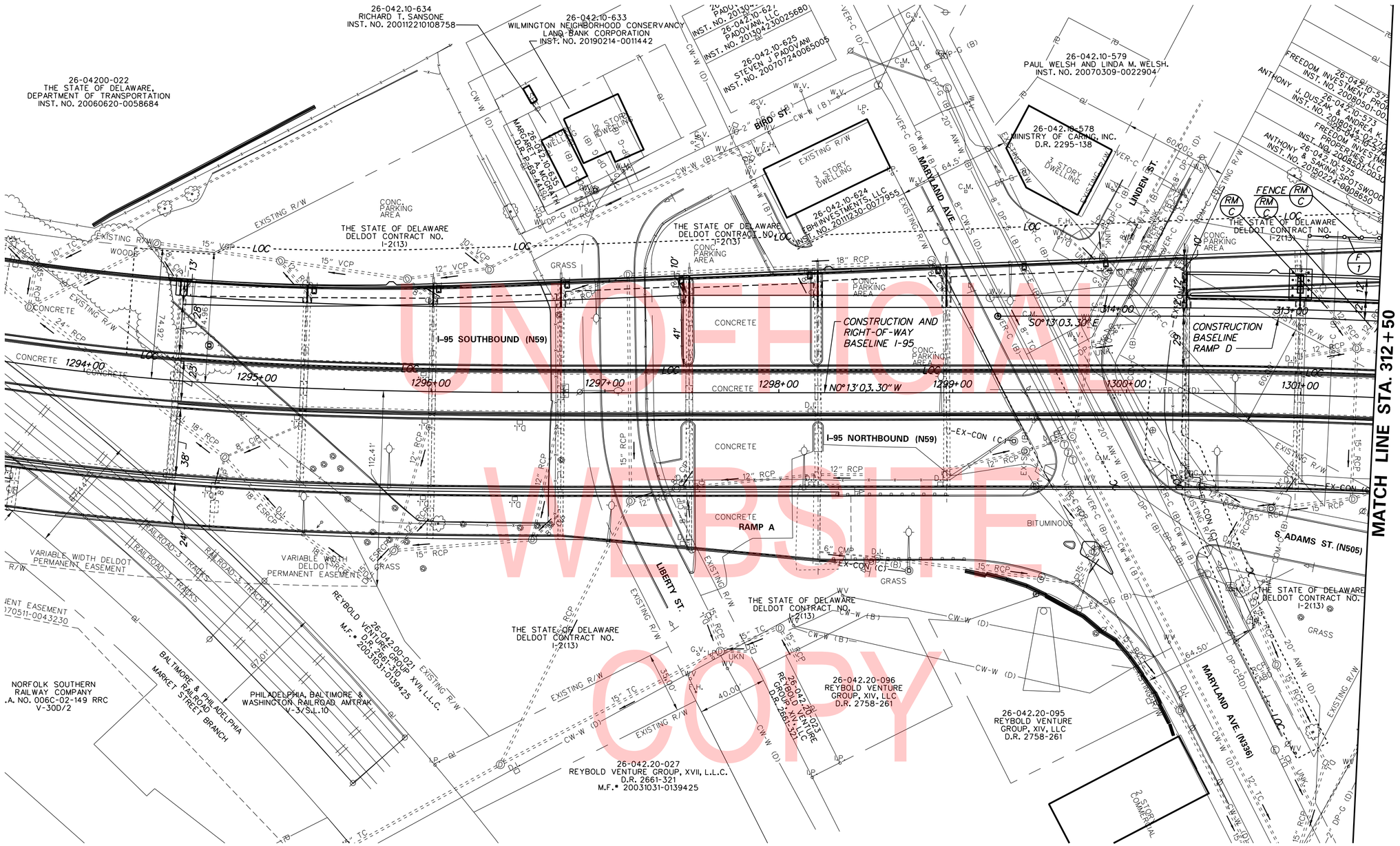

UNOFFICIAL WEBSITE COPY

FENCE SCHEDULE

NO.	QTY.	DESCRIPTION	NOTES
1	42.50'	DECORATIVE FENCE (ITEM 727005)	STA. 312+50, 48' RT. TO STA. 312+92, 47' RT. (+/-)

NOTES:
1. SEE CONSTRUCTION DETAIL DT-01 FOR DECORATIVE FENCE DETAIL.

ADDENDA / REVISIONS

SCALE 0 30 60 90 FEET

REHABILITATION OF I-95, 2ND STREET ON-RAMP IMPROVEMENTS

CONTRACT	BRIDGE NO.	1-748S, 1-750, 1-758
T201907402	DESIGNED BY:	J. DAVIS
COUNTY	CHECKED BY:	B. TOWNSEND
NEW CASTLE		

CONSTRUCTION PLAN

CP-01
SECTION WRA
SHEET NO. 15

N:\31987-004\Contract_Ramp_D\CADD\CP01.dgn
8/2/2019 3:14:22 PM

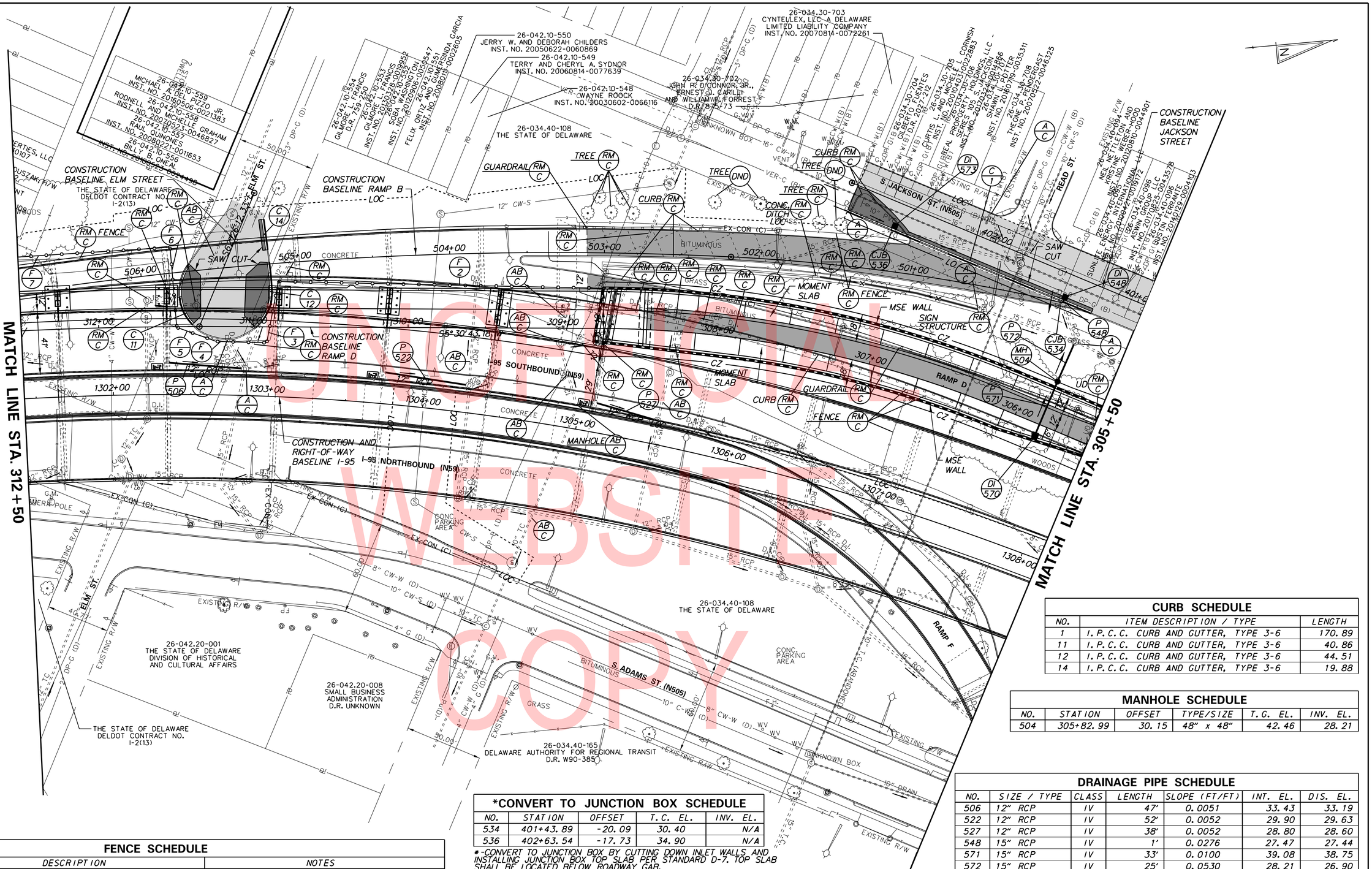

CURB SCHEDULE

NO.	ITEM DESCRIPTION / TYPE	LENGTH
1	I.P.C.C. CURB AND GUTTER, TYPE 3-6	170.89
11	I.P.C.C. CURB AND GUTTER, TYPE 3-6	40.86
12	I.P.C.C. CURB AND GUTTER, TYPE 3-6	44.51
14	I.P.C.C. CURB AND GUTTER, TYPE 3-6	19.88

MANHOLE SCHEDULE

NO.	STATION	OFFSET	TYPE/SIZE	T.G. EL.	INV. EL.
504	305+82.99	30.15	48" x 48"	42.46	28.21

DRAINAGE PIPE SCHEDULE

NO.	SIZE / TYPE	CLASS	LENGTH	SLOPE (FT/FT)	INT. EL.	DIS. EL.
506	12" RCP	IV	47'	0.0051	33.43	33.19
522	12" RCP	IV	52'	0.0052	29.90	29.63
527	12" RCP	IV	38'	0.0052	28.80	28.60
548	15" RCP	IV	1'	0.0276	27.47	27.44
571	15" RCP	IV	33'	0.0100	39.08	38.75
572	15" RCP	IV	25'	0.0530	28.21	26.90

*CONVERT TO JUNCTION BOX SCHEDULE

NO.	STATION	OFFSET	T.C. EL.	INV. EL.
534	401+43.89	-20.09	30.40	N/A
536	402+63.54	-17.73	34.90	N/A

*-CONVERT TO JUNCTION BOX BY CUTTING DOWN INLET WALLS AND INSTALLING JUNCTION BOX TOP SLAB PER STANDARD D-7. TOP SLAB SHALL BE LOCATED BELOW ROADWAY GAB.

FENCE SCHEDULE

NO.	QTY.	DESCRIPTION	NOTES
2	209.56'	DECORATIVE FENCE (ITEM 727005)	STA. 308+75, 26' RT. TO STA. 310+84, 29' RT. (+/-)
3	40.29'	DECORATIVE FENCE (ITEM 727005)	STA. 310+84, 29' RT. TO STA. 310+91, 10' LT. (+/-)
4	32.69'	DECORATIVE FENCE (ITEM 727005)	STA. 310+91, 10' LT. TO STA. 311+24, 10' LT. (+/-)
5	27.05'	DECORATIVE FENCE (ITEM 727005)	STA. 311+24, 10' LT. TO STA. 311+50, 0' (+/-)
6	51.90'	DECORATIVE FENCE (ITEM 727005)	STA. 311+50, 0' TO STA. 311+53, 51' RT. (+/-)
7	98.57'	DECORATIVE FENCE (ITEM 727005)	STA. 311+53, 51' RT. TO STA. 312+50, 48' RT. (+/-)

DRAINAGE INLET SCHEDULE

NO.	STATION	OFFSET	BOX SIZE	GRATE	T.G. EL.	INV. EL.
548	401+44.45	-17.07	34" x 24"	1	31.60	27.47
570	305+82.81	-10.31	34" x 24"	1	53.15	39.08
573	402+63.65	-17.07	34" x 24"	1	36.37	31.73

NOTES:
1. SEE CONSTRUCTION DETAIL DT-01 FOR CURB PATCH DETAIL.
2. SEE CONSTRUCTION DETAIL DT-01 FOR DECORATIVE FENCE DETAIL.

ADDENDA / REVISIONS

SCALE 0 30 60 90 FEET

REHABILITATION OF I-95, 2ND STREET ON-RAMP IMPROVEMENTS

CONTRACT	BRIDGE NO. 1-748S, 1-750, 1-758
T201907402	DESIGNED BY: J. DAVIS
COUNTY	
NEW CASTLE	CHECKED BY: B. TOWNSEND

CONSTRUCTION PLAN

CP-02
SECTION WRA
SHEET NO. 16

N:\31987-004\CONTRACT_RAMP_D\CADD\CP02.dgn
9/3/2019 9:54:36 AM

UNOFFICIAL WEBSITE COPY

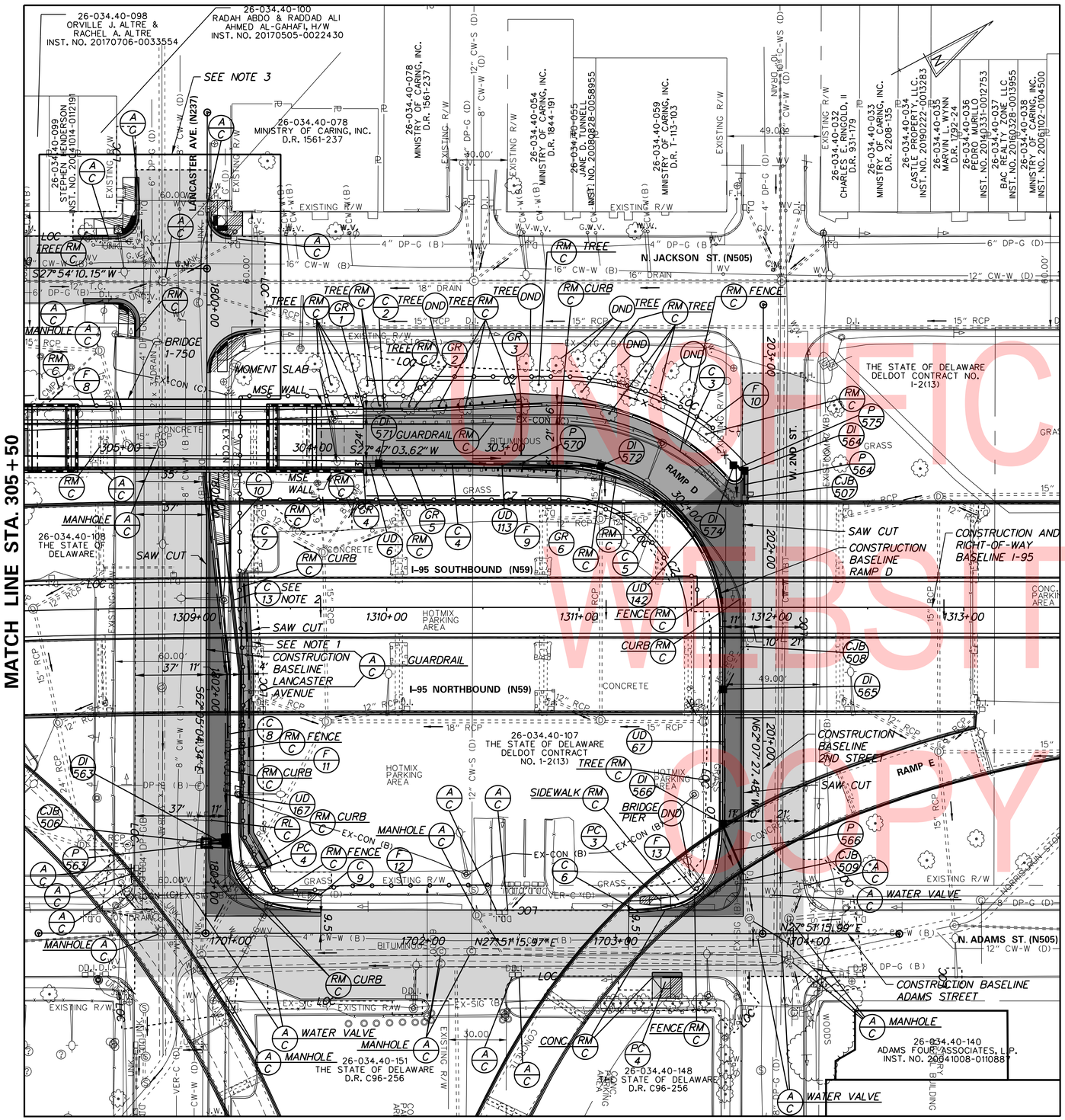

FENCE SCHEDULE

NO.	QTY.	DESCRIPTION	NOTES
8	20.56′	DECORATIVE FENCE (ITEM 727005)	STA. 305+04, 23′ RT. TO STA. 305+22, 26′ RT. (+/-)
9	269.41′	DECORATIVE FENCE (ITEM 727005)	STA. 301+47, 13′ LT. TO STA. 304+38, 23′ LT. (+/-)
10	255.49′	DECORATIVE FENCE (ITEM 727005)	STA. 302+14, 43′ RT. TO STA. 304+37, 31′ RT. (+/-)
11	262.22′	DECORATIVE FENCE (ITEM 727005)	STA. 1800+47, 18′ LT. TO STA. 1803+04, 36′ LT. (+/-)
12	112.68′	DECORATIVE FENCE (ITEM 727005)	STA. 1701+23, 23′ LT. TO STA. 1702+35, 25′ LT. (+/-)
13	9.36′	DECORATIVE FENCE (ITEM 727005)	STA. 1703+38, 20′ LT. TO STA. 1703+46, 26′ LT. (+/-)

GUARDRAIL SCHEDULE

NO.	ITEM DESCRIPTION / TYPE	BEGIN STA.	OFFSET	LENGTH
1	GUARDRAIL TO BARRIER CONNECTION, APPROACH TYPE 1-31	303+73.58	24.00′	19.75′
2	GALVANIZED STEEL BEAM GUARDRAIL, TYPE 1-31	303+53.83	24.00′	12.50′
3	GUARDRAIL END TREATMENT, TYPE 1-31, TEST LEVEL 3	303+41.33	24.00′	50.00′
4	GUARDRAIL TO BARRIER CONNECTION, APPROACH TYPE 1-31	303+73.58	-6.00′	19.75′
5	GALVANIZED STEEL BEAM GUARDRAIL, TYPE 1-31	303+53.83	-6.00′	32.94′
6	GUARDRAIL END TREATMENT, TYPE 1-31, TEST LEVEL 3	303+20.89	-6.00′	50.00′

DRAINAGE PIPE SCHEDULE

NO.	SIZE / TYPE	CLASS	LENGTH	SLOPE (FT/FT)	INT. EL.	DIS. EL.
563	15″ RCP	IV	7′	0.0030	12.40	12.38
564	15″ RCP	IV	12′	0.0083	24.94	24.84
566	15″ RCP	IV	26′	0.0100	16.59	16.33
570	15″ RCP	IV	112′	0.0719	34.60	26.52
575	15″ RCP	IV	5′	0.0030	25.05	25.04

DRAINAGE INLET SCHEDULE

NO.	STATION	OFFSET	BOX SIZE	GRATE	T.G. EL.	INV. EL.
563	1802+78.47	-12.00	34″ x 24″	1	20.09	12.40
564	202+40.02	-11.00	34″ x 24″	1	28.44	24.94
*565	201+27.01	-22.00	34″ x 24″	1	22.61	MATCH EX.
566	200+57.22	-22.00	34″ x 24″	1	20.09	16.59
571	303+65.63	-6.08	34″ x 24″	2	38.20	34.60
572	302+49.20	-4.44	34″ x 24″	2	30.02	24.17
574	302+00.00	-36.23	24″ x 24″	6	28.03	25.05

*-INLET SHALL BE CAST-IN-PLACE.

CURB SCHEDULE

NO.	ITEM DESCRIPTION / TYPE	LENGTH
2	I.P.C.C. CURB AND GUTTER, TYPE 3-2	174.20′
3*	I.P.C.C. CURB AND GUTTER, TYPE 3-6	38.43′
4	I.P.C.C. CURB AND GUTTER, TYPE 3-2	174.84′
5*	I.P.C.C. CURB AND GUTTER, TYPE 3-6	216.62′
6	I.P.C.C. CURB AND GUTTER, TYPE 3-6	15.20′
7	P.C.C. CURB, TYPE 1-8	155.49′
8	I.P.C.C. CURB AND GUTTER, TYPE 3-6	262.30′
9	P.C.C. CURB, TYPE 1-8	6.67′
10	P.C.C. CURB, TYPE 1-8	6.74′
13	CURB RETAINING WALL, TYPE 3	253.16′

*TRANSITION I.P.C.C. CURB AND GUTTER TYPE 3-6 TO I.P.C.C CURB AND GUTTER TYPE 3-2 OVER 4′.

*CONVERT TO JUNCTION BOX SCHEDULE

NO.	STATION	OFFSET	T.C. EL.	INV. EL.
507	202+26.68	-9.81	25.80	N/A
508	201+50.59	-10.01	21.12	N/A
509	200+29.44	-9.95	17.30	N/A
506	1802+78.06	-0.25	14.70	N/A

*-CONVERT TO JUNCTION BOX BY CUTTING DOWN INLET WALLS AND INSTALLING JUNCTION BOX TOP SLAB PER STANDARD D-7. TOP SLAB SHALL BE LOCATED BELOW ROADWAY GAB.

NOTES:

1. SEE CONSTRUCTION DETAIL DT-01 FOR CURB PATCH DETAIL.
2. SEE STANDARD CONSTRUCTION DETAIL C-6 (2017) FOR CURB RETAINING WALL. A MAXIMUM HEIGHT OF 4′-0″ IS ALLOWED AT THIS LOCATION.
   PROVIDE PORTLAND CEMENT CONCRETE MASONRY, CLASS A FOR CURB RETAINING WALL.
   PAYMENT WILL BE MADE UNDER ITEM 701509 - CURB RETAINING WALL, TYPE 3 FOR THE ENTIRE LENGTH OF THE CURB RETAINING WALL.
3. SEE CONSTRUCTION DETAIL DT-04 AND DT-05 FOR LANCASTER AVENUE AND JACKSON STREET INTERSECTION DETAILS.
4. SEE CONSTRUCTION DETAIL DT-01 FOR DECORATIVE FENCE DETAIL.

UNOFFICIAL WEBSITE COPY

ADDENDA / REVISIONS

SCALE 0 30 60 90 FEET

REHABILITATION OF I-95, 2ND STREET ON-RAMP IMPROVEMENTS

CONTRACT	BRIDGE NO.	1-750
T201907402	DESIGNED BY: J. DAVIS	
COUNTY	CHECKED BY: B. TOWNSEND	
NEW CASTLE		

CONSTRUCTION PLAN

CP-03

SECTION WRA

SHEET NO. 17

N:\31987-004\Contract_Romp_D\CADD\CP03.dgn
9/13/2019 10:54:12 AM

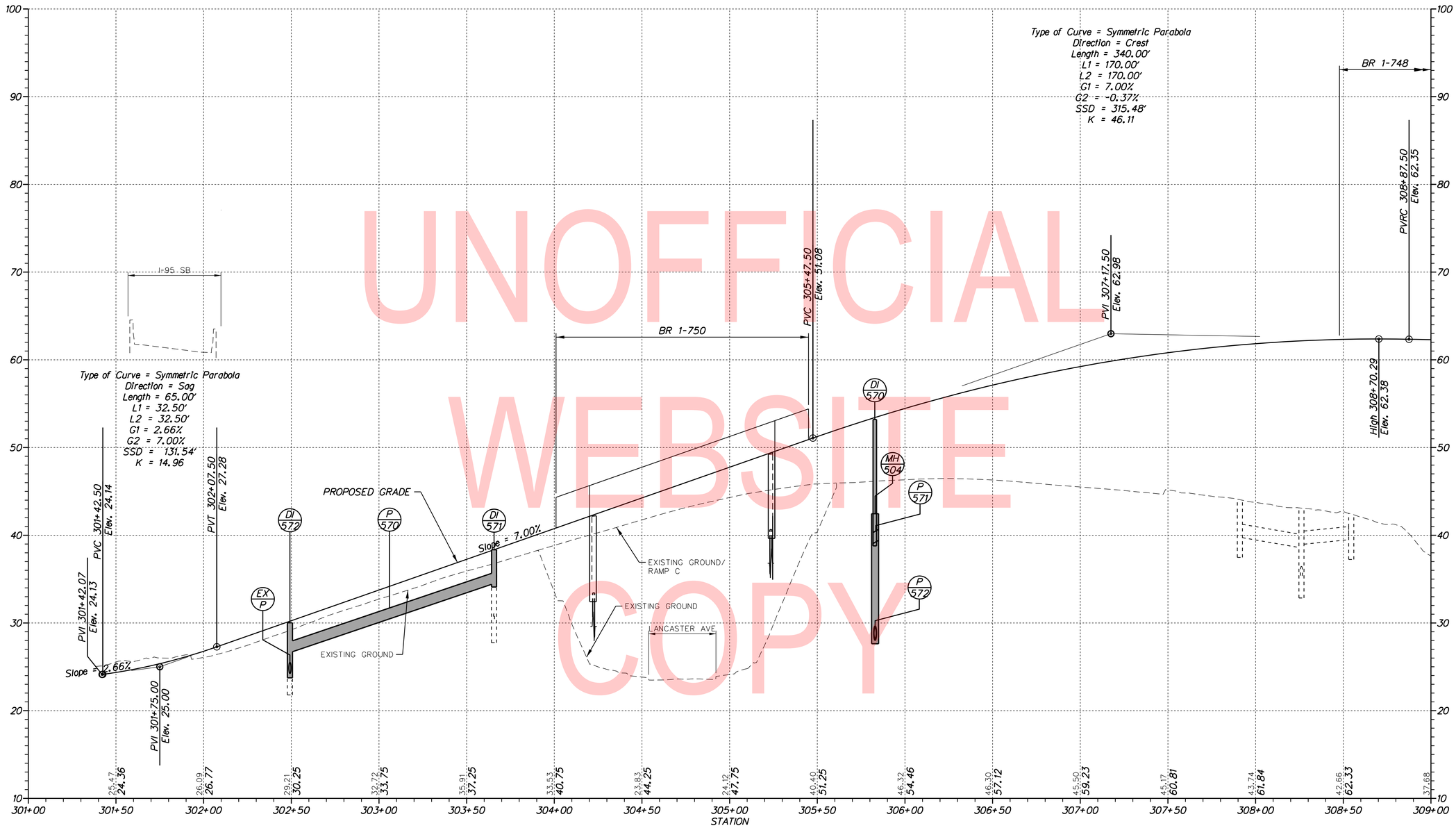

RAMP D

UNOFFICIAL WEBSITE COPY

VERTICAL SCALE FEET 18 12 6 0

PF-01

ADDENDA / REVISIONS	SCALE 0 30 60 90 FEET	REHABILITATION OF I-95, 2ND STREET ON-RAMP IMPROVEMENTS	CONTRACT T201907402	BRIDGE NO. 1-758	PROFILE	SECTION WRA
			COUNTY NEW CASTLE	DESIGNED BY: J. DAVIS		SHEET NO. 18
				CHECKED BY: B. TOWNSEND		

N:\31987-004\Contract_Ramp_D\CADD\PF01.dgn
8/2/2019 3:14:25 PM

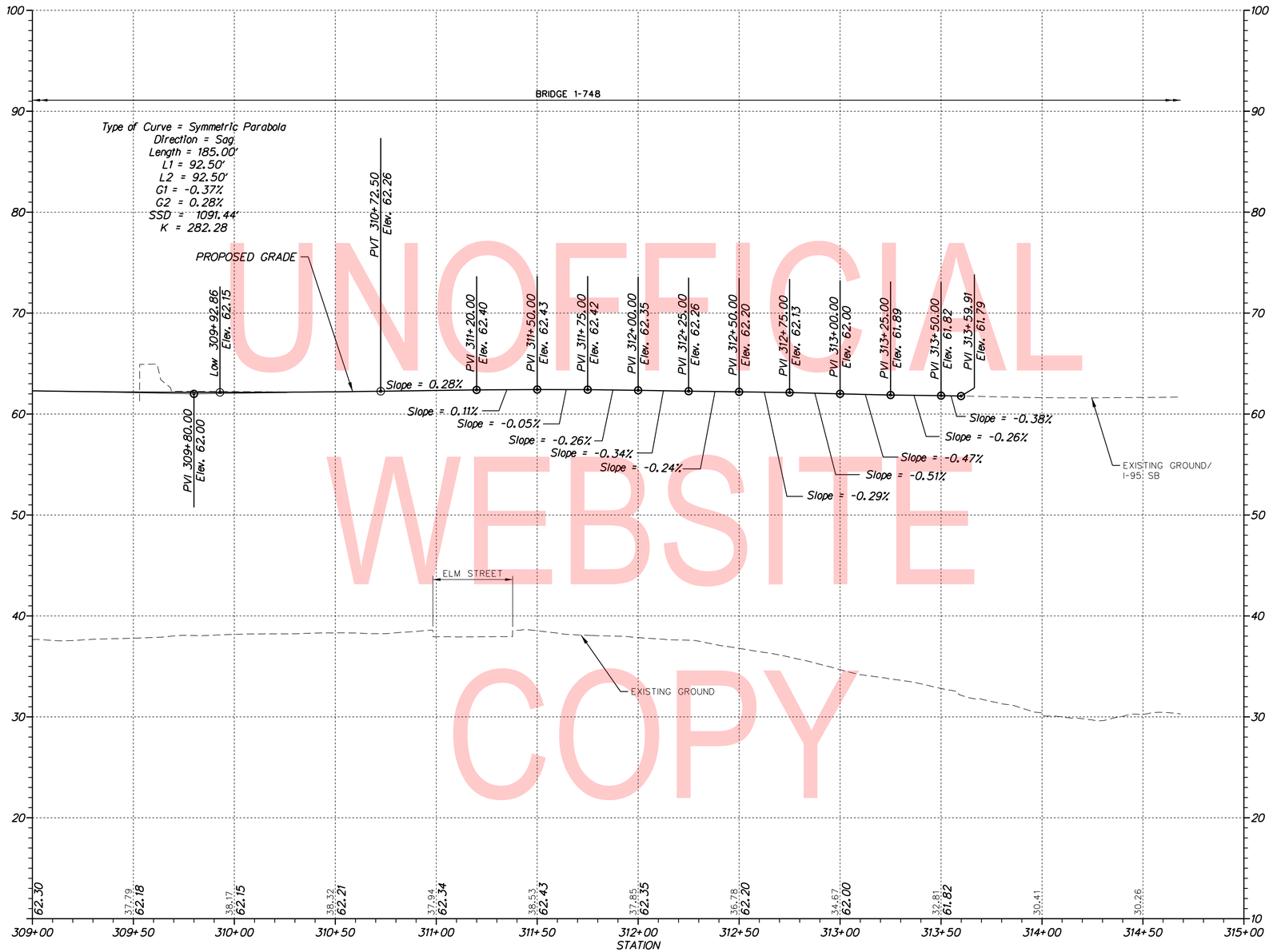

UNOFFICIAL WEBSITE COPY

RAMP D

VERTICAL SCALE FEET 18 12 6 0

PF-02

ADDENDA / REVISIONS	

SCALE 0 30 60 90 FEET

REHABILITATION OF I-95, 2ND STREET ON-RAMP IMPROVEMENTS

CONTRACT	BRIDGE NO.	
T201907402	DESIGNED BY: J. DAVIS	
COUNTY		
NEW CASTLE	CHECKED BY: B. TOWNSEND	

PROFILE

SECTION: WRA

SHEET NO. 19

N:\31987-004\Contract_Ramp_D\CADD\PF02.dgn
8/22/2019 3:14:25 PM

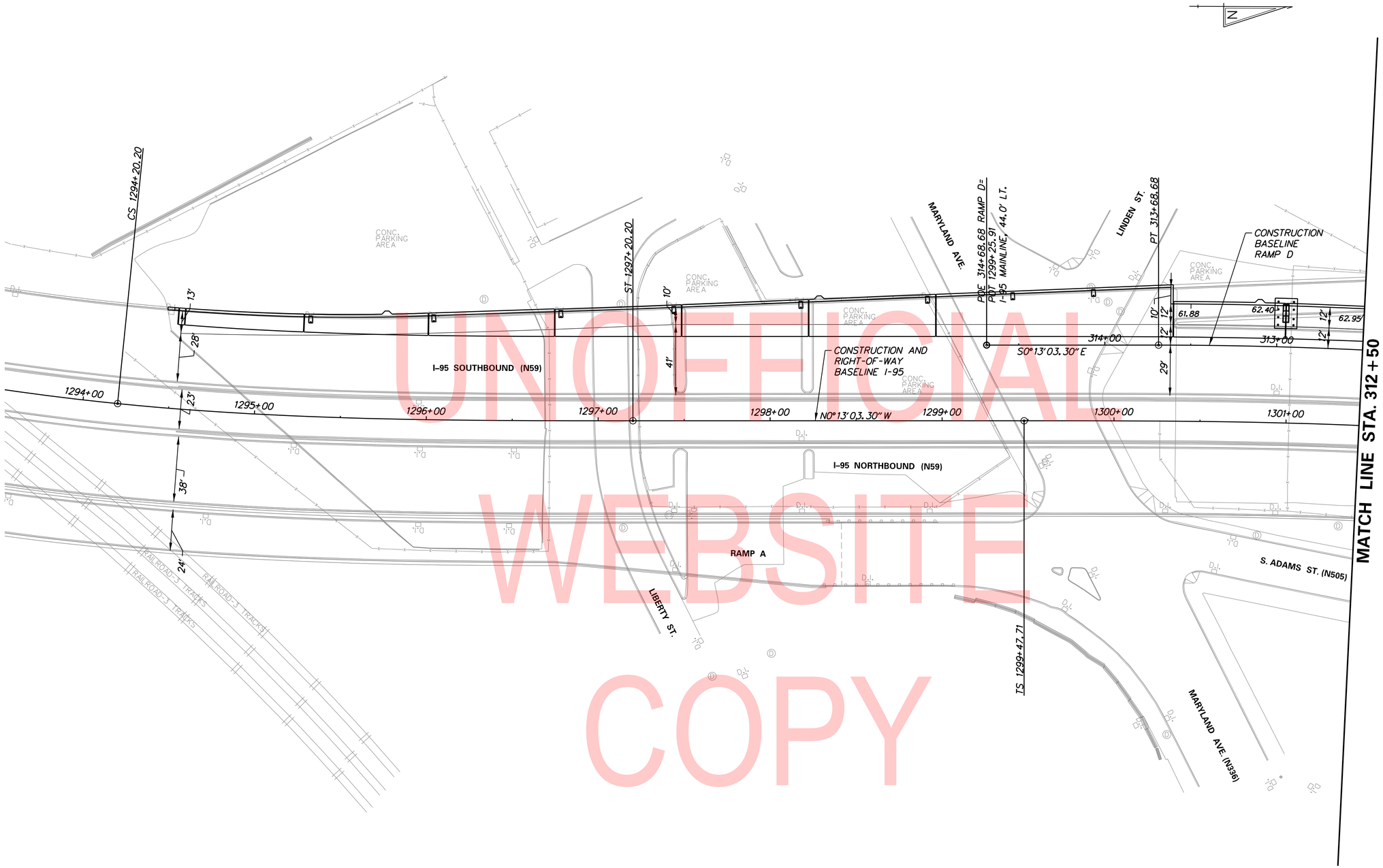

UNOFFICIAL WEBSITE COPY

N:\31987-00A\Contract_Ramp_D\CADD\GG01.dgn
8/27/2019 3:14:27 PM

ADDENDA / REVISIONS	

SCALE
0 30 60 90
FEET

REHABILITATION OF I-95, 2ND STREET ON-RAMP IMPROVEMENTS

CONTRACT	BRIDGE NO.	
T201907402	DESIGNED BY: J. DAVIS	
COUNTY	CHECKED BY: B. TOWNSEND	
NEW CASTLE		

GRADES AND GEOMETRICS AND JOINT LAYOUT

GG-01
SECTION
WRA
SHEET NO.
20

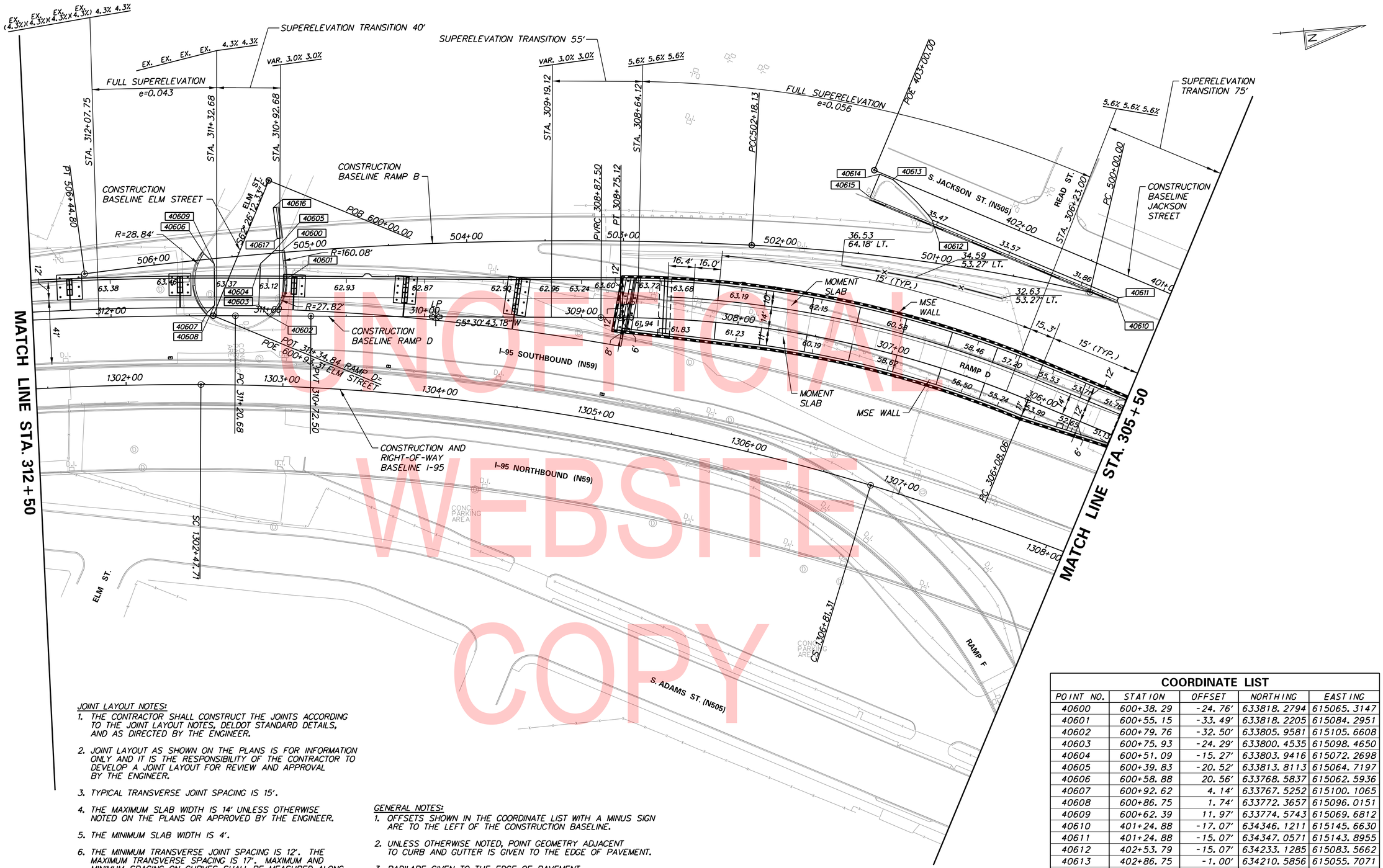

UNOFFICIAL WEBSITE COPY

JOINT LAYOUT NOTES:

1. THE CONTRACTOR SHALL CONSTRUCT THE JOINTS ACCORDING TO THE JOINT LAYOUT NOTES, DELDOT STANDARD DETAILS, AND AS DIRECTED BY THE ENGINEER.
2. JOINT LAYOUT AS SHOWN ON THE PLANS IS FOR INFORMATION ONLY AND IT IS THE RESPONSIBILITY OF THE CONTRACTOR TO DEVELOP A JOINT LAYOUT FOR REVIEW AND APPROVAL BY THE ENGINEER.
3. TYPICAL TRANSVERSE JOINT SPACING IS 15'.
4. THE MAXIMUM SLAB WIDTH IS 14' UNLESS OTHERWISE NOTED ON THE PLANS OR APPROVED BY THE ENGINEER.
5. THE MINIMUM SLAB WIDTH IS 4'.
6. THE MINIMUM TRANSVERSE JOINT SPACING IS 12'. THE MAXIMUM TRANSVERSE SPACING IS 17'. MAXIMUM AND MINIMUM SPACING ON CURVES SHALL BE MEASURED ALONG THE LONGEST CHORD.
7. IT IS THE RESPONSIBILITY OF THE CONTRACTOR TO MAKE THE NECESSARY ADJUSTMENTS TO THE JOINT LAYOUT SO THAT UTILITY AND DRAINAGE FEATURES WITHIN 5' OF JOINTS CAN PASS THROUGH THE FEATURE OR BOXOUT SURROUNDING THE FEATURE.

GENERAL NOTES:

1. OFFSETS SHOWN IN THE COORDINATE LIST WITH A MINUS SIGN ARE TO THE LEFT OF THE CONSTRUCTION BASELINE.
2. UNLESS OTHERWISE NOTED, POINT GEOMETRY ADJACENT TO CURB AND GUTTER IS GIVEN TO THE EDGE OF PAVEMENT.
3. RADII ARE GIVEN TO THE EDGE OF PAVEMENT.
4. UNLESS OTHERWISE NOTED, EDGE OF PAVEMENT ELEVATIONS AT CURB RETURNS ARE GIVEN AT 10 FOOT INTERVALS.
5. PROPOSED CURB OR PAVEMENT THAT TIES INTO EXISTING PAVEMENT OR EXISTING CURBS SHALL MATCH EXISTING PAVEMENT OR CURB ELEVATIONS AND CROSS SLOPES.

COORDINATE LIST

POINT NO.	STATION	OFFSET	NORTHING	EASTING
40600	600+38.29	-24.76'	633818.2794	615065.3147
40601	600+55.15	-33.49'	633818.2205	615084.2951
40602	600+79.76	-32.50'	633805.9581	615105.6608
40603	600+75.93	-24.29'	633800.4535	615098.4650
40604	600+51.09	-15.27'	633803.9416	615072.2698
40605	600+39.83	-20.52'	633813.8113	615064.7197
40606	600+58.88	20.56'	633768.5837	615062.5936
40607	600+92.62	4.14'	633767.5252	615100.1065
40608	600+86.75	1.74'	633772.3657	615096.0151
40609	600+62.39	11.97'	633774.5743	615069.6812
40610	401+24.88	-17.07'	634346.1211	615145.6630
40611	401+24.88	-15.07'	634347.0571	615143.8955
40612	402+53.79	-15.07'	634233.1285	615083.5662
40613	402+86.75	-1.00'	634210.5856	615055.7071
40614	402+95.77	-1.00'	634202.6206	615051.4893
40615	402+95.77	-17.07'	634195.0999	615065.6918
40616	600+15.03	-9.19	633815.2450	615037.4846
40617	600+32.27	-19.08	633816.0347	615057.3511

ADDENDA / REVISIONS

SCALE 0 30 60 90 FEET

REHABILITATION OF I-95, 2ND STREET ON-RAMP IMPROVEMENTS

CONTRACT	BRIDGE NO.
T201907402	DESIGNED BY: J. DAVIS
COUNTY	
NEW CASTLE	CHECKED BY: B. TOWNSEND

GRADES AND GEOMETRICS AND JOINT LAYOUT

GG-02

SECTION WRA

SHEET NO. 21

N:\31987-004\Contract_Ramp_D\CADD\GG02.dgn
8/27/2019 3:14:28 PM

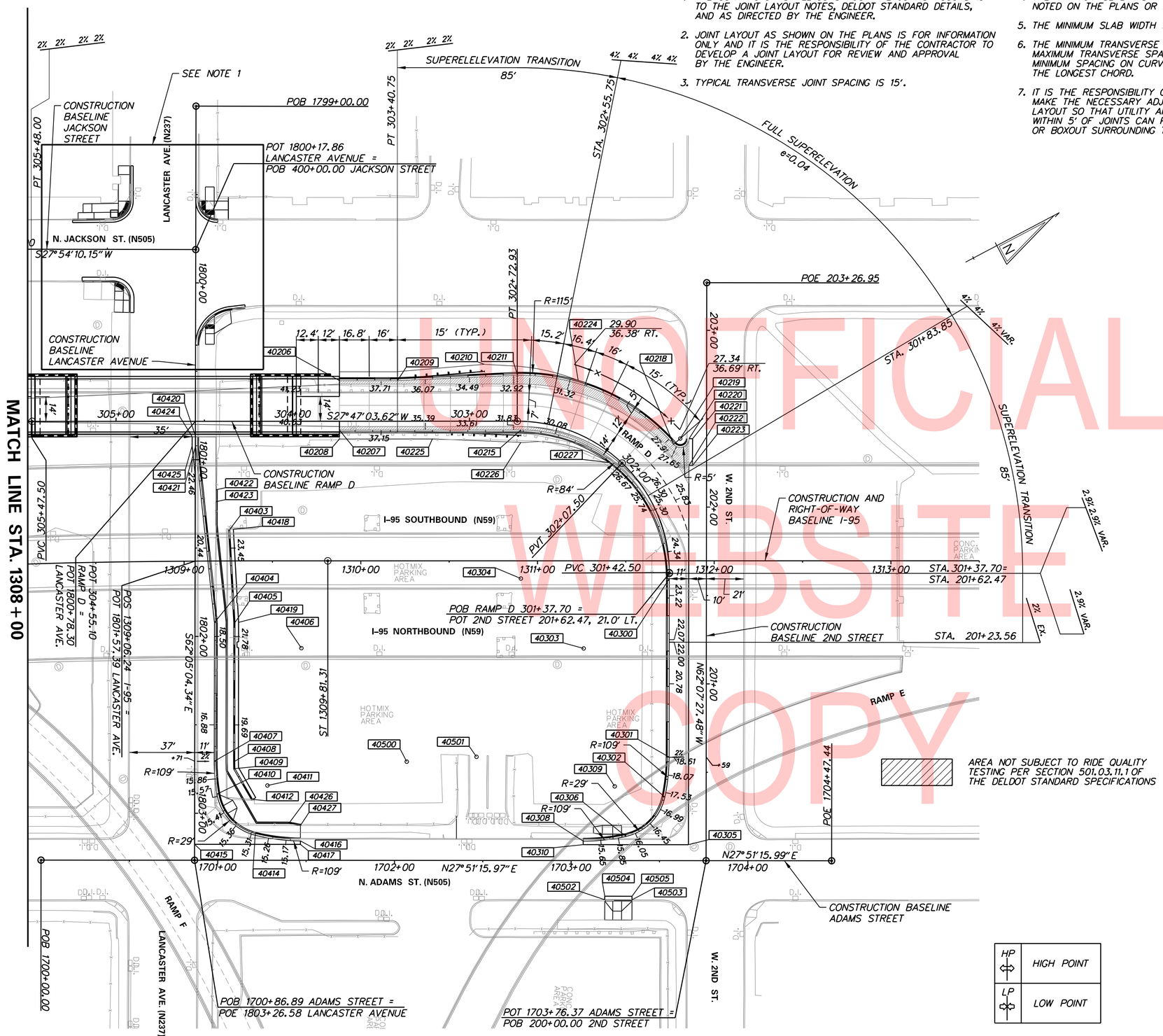

UNOFFICIAL WEBSITE COPY

JOINT LAYOUT NOTES:

1. THE CONTRACTOR SHALL CONSTRUCT THE JOINTS ACCORDING TO THE JOINT LAYOUT NOTES, DELDOT STANDARD DETAILS, AND AS DIRECTED BY THE ENGINEER.
2. JOINT LAYOUT AS SHOWN ON THE PLANS IS FOR INFORMATION ONLY AND IT IS THE RESPONSIBILITY OF THE CONTRACTOR TO DEVELOP A JOINT LAYOUT FOR REVIEW AND APPROVAL BY THE ENGINEER.
3. TYPICAL TRANSVERSE JOINT SPACING IS 15'.

JOINT LAYOUT NOTES (CONT.):

4. THE MAXIMUM SLAB WIDTH IS 14' UNLESS OTHERWISE NOTED ON THE PLANS OR APPROVED BY THE ENGINEER.
5. THE MINIMUM SLAB WIDTH IS 4'.
6. THE MINIMUM TRANSVERSE JOINT SPACING IS 12'. THE MAXIMUM TRANSVERSE SPACING IS 17'. MAXIMUM AND MINIMUM SPACING ON CURVES SHALL BE MEASURED ALONG THE LONGEST CHORD.
7. IT IS THE RESPONSIBILITY OF THE CONTRACTOR TO MAKE THE NECESSARY ADJUSTMENTS TO THE JOINT LAYOUT SO THAT UTILITY AND DRAINAGE FEATURES WITHIN 5' OF JOINTS CAN PASS THROUGH THE FEATURE OR BOXOUT SURROUNDING THE FEATURE.

GENERAL NOTES:

1. OFFSETS SHOWN IN THE COORDINATE LIST WITH A MINUS SIGN ARE TO THE LEFT OF THE CONSTRUCTION BASELINE.
2. UNLESS OTHERWISE NOTED, POINT GEOMETRY ADJACENT TO CURB AND GUTTER IS GIVEN TO THE EDGE OF PAVEMENT.
3. RADII ARE GIVEN TO THE EDGE OF PAVEMENT.
4. UNLESS OTHERWISE NOTED, EDGE OF PAVEMENT ELEVATIONS AT CURB RETURNS ARE GIVEN AT 10 FOOT INTERVALS.
5. PROPOSED CURB OR PAVEMENT THAT TIES INTO EXISTING PAVEMENT OR EXISTING CURBS SHALL MATCH EXISTING PAVEMENT OR CURB ELEVATIONS AND CROSS SLOPES.

NOTES:

1. SEE CONSTRUCTION DETAIL DT-04 AND DT-05 FOR LANCASTER AVENUE AND JACKSON STREET INTERSECTION DETAILS.

COORDINATE LIST

POINT NO.	STATION	OFFSET	NORTHING	EASTING
40206	303+73.58	23.00'	634501.8265	615292.5181
40207	303+73.57	-5.00'	634488.7850	615317.2955
40208	303+73.58	-10.00'	634486.4437	615321.7135
40209	303+40.75	23.00'	634530.8744	615307.8232
40210	302+91.67	32.17'	634578.5654	615322.5893
40211	302+72.80	25.99'	634592.4111	615336.8719
40212	302+61.73	27.93'	634605.8068	615342.8248
40215	302+70.81	-4.98'	634579.5890	615365.1393
40218	301+97.07	28.58'	634652.2724	615412.6797
40219	301+97.18	33.58'	634657.1350	615411.5156
40220	301+94.94	37.45'	634661.5377	615413.8855
40221	301+94.09	39.01'	634663.2988	615414.8335
40222	301+85.97	28.58'	634654.3241	615427.3156
40223	301+85.18	30.26'	634656.0730	615428.2570
40224	302+46.60	28.37'	634621.3977	615355.4560
40225	303+20.97	-10.00'	634532.9876	615346.2370
40226	302+70.61	-11.97'	634576.3253	615371.3337
40227	302+13.62	-4.78'	634614.9902	615404.5281
40300	201+59.47	-21.00'	634614.6843	615478.7323
40301	200+58.57	-21.00'	634567.5056	615567.9288
40302	200+35.92	-23.38'	634554.8180	615586.8313
40303	201+19.97	-69.41'	634553.4254	615491.0124
40304	201+59.47	-105.00'	634540.4328	615439.4548
40305	200+09.00	-10.00'	634554.0527	615616.8900
40306	200+13.66	-45.34'	634524.9945	615596.2392
40308	200+10.97	-69.57'	634502.3233	615587.2911
40309	200+41.95	-51.74'	634532.5586	615568.2431
40310	200+08.97	-69.57'	634501.3857	615589.0577
40403	1801+39.42	-19.58'	634407.6680	615338.0404
40404	1801+92.18	-11.00'	634375.3871	615380.6524
40405	1801+92.04	-22.67'	634385.7649	615385.9847
40406	1802+06.52	-60.23'	634412.1761	615416.3685
40407	1802+70.59	-11.00'	634338.6785	615449.9376
40408	1802+70.52	-22.67	634349.0192	615455.3400
40409	1802+74.70	-22.78'	634347.1624	615459.0851
40410	1802+89.15	-12.59'	634331.3951	615467.0857
40411	1802+84.22	-41.17'	634358.9584	615476.1002
40412	1802+92.13	-32.82'	634347.8743	615479.1841
40414	1803+12.38	-34.26'	634339.6670	615497.7530
40415	1803+17.58	0.00'	634306.9588	615486.3120
40416	1803+15.52	-59.89'	634360.8423	615512.5238
40417	1803+17.52	-59.88'	634359.9004	615514.2882
40418	1801+39.34	-21.57'	634409.4711	615338.9066
40419	1801+91.98	-24.67'	634387.5597	615386.8692
40420	1800+87.03	-0.18'	634415.0536	615282.6664
40421	1800+92.19	-0.18'	634412.6346	615287.2320
40422	1801+17.00	-11.75'	634411.2485	615314.5681
40423	1801+23.74	-11.75'	634408.0940	615320.5220
40424	1800+87.03	1.82'	634413.2863	615281.7300
40425	1800+92.19	1.82'	634410.8673	615286.2957
40426	1803+05.61	-53.32'	634359.6834	615500.6949
40427	1803+06.84	-59.88'	634364.8952	615504.8545
40500	1702+06.95	-55.86'	634434.9952	615500.9679
40501	1702+46.39	-58.61'	634471.1536	615516.9653
40502	1703+19.06	22.16'	634497.6587	615622.3327
40503	1703+34.46	22.18'	634511.2645	615629.5410
40504	1703+19.06	20.16'	634498.5951	615620.5655
40505	1703+34.46	20.18'	634512.2052	615627.7772

AREA NOT SUBJECT TO RIDE QUALITY TESTING PER SECTION 501.03.11.1 OF THE DELDOT STANDARD SPECIFICATIONS

HP	HIGH POINT
LP	LOW POINT

ADDENDA / REVISIONS

SCALE 0 30 60 90 FEET

REHABILITATION OF I-95, 2ND STREET ON-RAMP IMPROVEMENTS

CONTRACT	BRIDGE NO.
T201907402	DESIGNED BY: J. DAVIS
COUNTY	CHECKED BY: B. TOWNSEND
NEW CASTLE	

GRADES AND GEOMETRICS AND JOINT LAYOUT

GG-03

SECTION WRA

SHEET NO. 22

N:\31987-004\Contract_Ramp_D\CADD\GG03.dgn 8/27/2019 1:31:13 PM

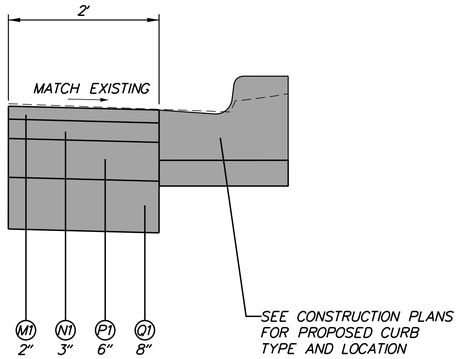

M1 ITEM 401026 - BITUMINOUS CONCRETE, SUPERPAVE TYPE C, 160 GYRATIONS PG 64-22 PATCHING

N1 ITEM 401027 - BITUMINOUS CONCRETE, SUPERPAVE TYPE B, 160 GYRATIONS PG 64-22 PATCHING

P1 ITEM 401028 - BITUMINOUS CONCRETE, SUPERPAVE BITUMINOUS CONCRETE BASE COURSE, 160 GYRATIONS PG 64-22 PATCHING

Q1 ITEM 301002 - GRADED AGGREGATE BASE COURSE, TYPE B, PATCHING

CURB PATCH DETAIL

NOT TO SCALE

LANCASTER AVENUE (PARKING LOT SIDE): STA. 1801+39.42 TO STA. 1802+92.13

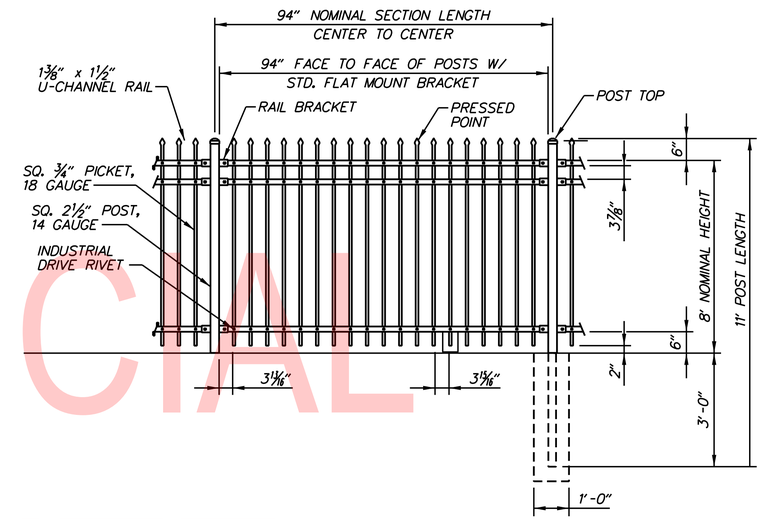

DECORATIVE FENCE

3-RAIL PRESSED POINT PICKET FENCE

NOT TO SCALE

NOTES:

1. INSTALLATION TO BE COMPLETED IN ACCORDANCE WITH THE PLANS, SECTION 727, AND THE MANUFACTURER'S SPECIFICATIONS.
2. CONCRETE FOR FOOTINGS SHALL BE 3,000 PSI CLASS B IN ACCORDANCE WITH SECTION 727.
3. COLOR OF FENCE SHALL BE BLACK.
4. MATERIALS:
   - POSTS AND PICKETS SHALL BE ASTM A787 WITH G90 ZINC COATING 0.90 OZ/FT2 AND STEEL TO HAVE 45,000 PSI YIELD STRENGTH.
   - RAILS SHALL BE U-CHANNELS 1 1/2" x 1 3/8" x 1 1/2" 11 GAUGE WALL THICKNESS AND GALVANIZED G90 ZINC COATING 0.90 OZ/FT2, MANUFACTURED PER ASTM A653 WITH 50,000 PSI YIELD STRENGTH.
   - FINISH SHALL BE POLYESTER COATED INDIVIDUALLY AFTER FABRICATION TO THOROUGHLY COAT ALL SURFACES. ALL COMPONENTS SHALL BE CLEANED TO PREPARE THE GALVANIZED SURFACES FOR COMPLETE ADHESION OF THE FINISH COAT AND COMPONENTS GIVEN A TGIC POLYESTER RESIN POWDER COATING APPLIED BY THE ELECTROSTATIC SPRAY PROCESS TO 3.0 MIL THICKNESS. FINISH BAKED 15 TO 20 MINUTES AT TEMPERATURE OF 400 DEGREES F.
   - POST CAPS SHALL BE FORMED STEEL MANUFACTURED TO FORM A WEATHER-TIGHT CLOSURE. CAPS SHALL BE FLAT TOP TO MATCH THE EXISTING FENCE AROUND THE DTC LOTS.
   - RAIL POST BRACKETS SHALL BE 1 1/2" x 1 3/8" x 1 1/2" 15 GAUGE GALVANIZED STEEL CHANNELS.
5. FASTENERS:
   - PICKETS SHALL BE ATTACHED TO RAILS USING 1/4" INDUSTRIAL DRIVE RIVETS. RIVETS SHALL HAVE A STRENGTH OF 1500 LBS AND A HOLDING POWER OF 1100 LBS.
   - RAILS SHALL BE MECHANICALLY PUNCHED TO RECEIVE PICKETS AND DRIVE RIVETS.
   - ATTACH RAILS TO BRACKETS USING ON-WAY SECURITY FASTENER.
   - BRACKETS SHALL BE FASTENED TO POST WITH ONE GALVANIZED HEX BOLT.
   - PICKETS SHALL HAVE A PRESSED POINT PICKET AT TOP TO MATCH THE EXISTING FENCE AROUND THE DTC LOTS.
6. CONTRACTOR SHALL SUBMIT SHOP DRAWINGS FOR APPROVAL BY THE ENGINEER INCLUDING PRODUCT DATA, PLAN LAYOUT, SPACING OF COMPONENTS, FOUNDATION DETAILS, HARDWARE ANCHORAGES, AND SCHEDULE OF COMPONENTS.
7. PAYMENT WILL BE MADE UNDER ITEM 727005 - DECORATIVE FENCE.

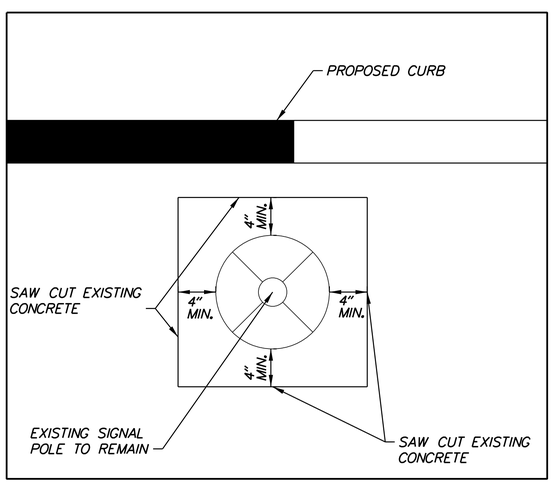

NOTES:

1. SAW CUT EXISTING SIDEWALK AND CURB AROUND SIGNAL POLE BASE. SAW CUT LINES SHALL BE ALONG EXISTING SIDEWALK JOINTS OR A MINIMUM OF 4" FROM THE BOTTOM OF THE POLE BASE.
2. PROTECT EXISTING SIGNAL POLE AND EXISTING SIDEWALK SLAB DURING REMOVAL OF ADJACENT CONCRETE AND CONSTRUCITON OF PROPOSED CURB AND SIDEWALK.
3. CONSTRUCT PROPOSED SIDEWALK AS SHOWN ON PLANS. PLACE A 1/2" POLYURETHANE-BONDED RECYCLED RUBBER (TYPE IV) EXPANSION JOINT FULL DEPTH OF SIDEWALK WHERE PROPOSED SIDEWALK BORDERS EXISTING SIDEWALK SLAB AND SIGNAL POLE.

CONSTRUCTION AROUND EXISTING SIGNAL POLE DETAIL

NOT TO SCALE

SOUTHWEST CORNER AT LANCASTER AVE AND S. JACKSON ST. (SEE DT-05)

UNOFFICIAL WEBSITE COPY

N:\31987-004\Contract_Ramp_DV\CADD\DT01.dgn
8/27/2019 3:14:50 PM

ADDENDA / REVISIONS	

NOT TO SCALE

REHABILITATION OF I-95, 2ND STREET ON-RAMP IMPROVEMENTS

CONTRACT	BRIDGE NO.	
T201907402	DESIGNED BY: J. DAVIS	
COUNTY		
NEW CASTLE	CHECKED BY: B. TOWNSEND	

CONSTRUCTION DETAILS

DT-01
SECTION
WRA
SHEET NO.
23

UNOFFICIAL WEBSITE COPY

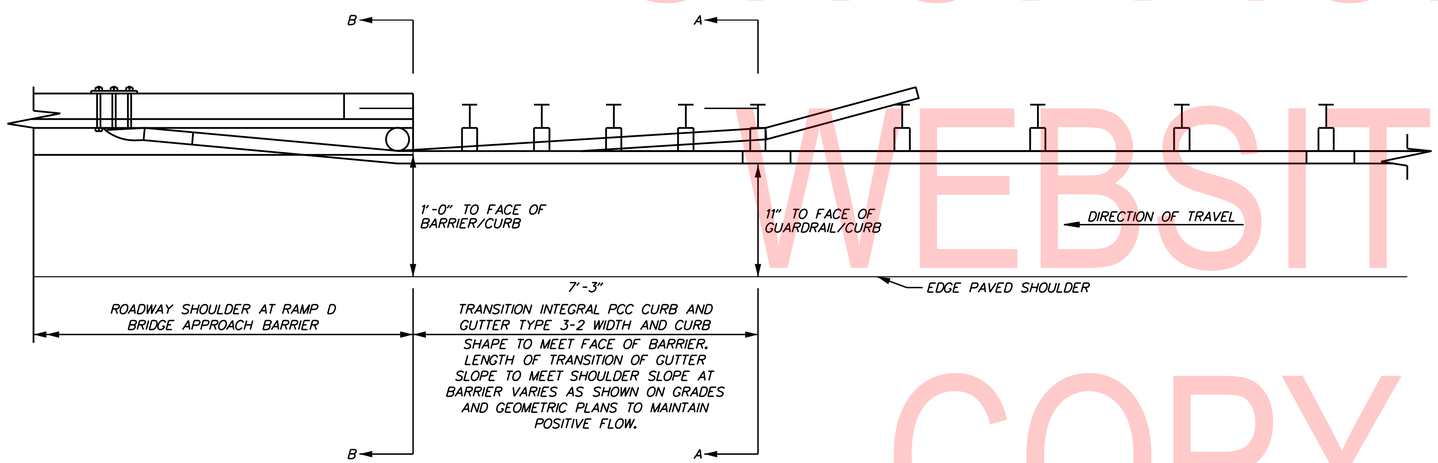

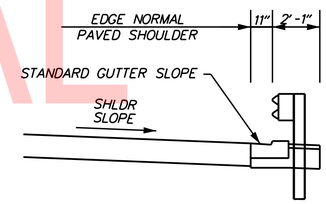

SECTION A-A

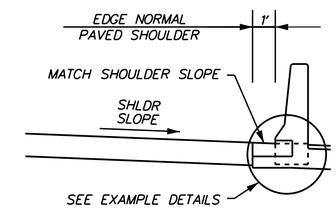

SECTION B-B

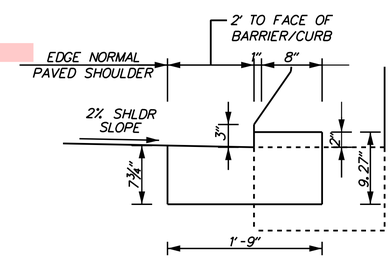

BARRIER/CURB DETAIL (2%)

NOTES:

1. PLACE PREFORMED EXPANSION JOINT MATERIAL BETWEEN END OF CURB AND BARRIER PER SECTION 701.03.

2. TRANSITION LIMITS TO BE MEASURED FOR PAYMENT UNDER ITEM 701016 WITH ALL COSTS FOR TRANSITION INCLUDED IN ITEM 701016.

CURB TRANSITION DETAILS AT GUARDRAIL TO BARRIER CONNECTION (APPROACH TYPE 1)

RAMP D, LEFT: STA. 303+66.33 TO STA. 303+73.58
RAMP D, RIGHT: STA. 303+66.33 TO STA. 303+73.58

N:\31987-004\Contract_Ramp_D\CADD\DT02.dgn
8/2/2019 3:14:31 PM

ADDENDA / REVISIONS	NOT TO SCALE	REHABILITATION OF I-95, 2ND STREET ON-RAMP IMPROVEMENTS	CONTRACT T201907402	BRIDGE NO.	CURB TRANSITION DETAILS AT GUARDRAIL TO BARRIER CONNECTION	DT-02
			COUNTY NEW CASTLE	DESIGNED BY: J. DAVIS		SECTION WRA
				CHECKED BY: B. TOWNSEND		SHEET NO. 24

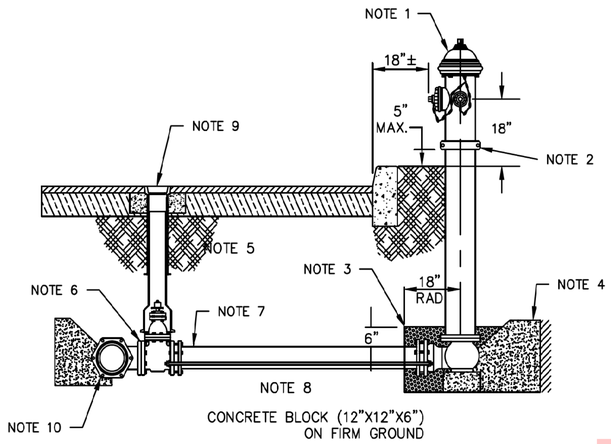

PROVIDE OPENING IN THRUST BLOCK FOR DRAIN HOLE

FIRE HYDRANT INSTALLATION DETAIL

NOT TO SCALE

NOTES:

1. HYDRANT SHALL BE KENNEDY GUARDIAN DRY-BARREL TRAFFIC MODEL DESIGN WITH 5-1/4" VALVE OPENING.

   A. TWO 2 1/2" HOSE NOZZLES WITH 7 THREADS PER INCH.
   B. ONE 4 1/2" STEAMER NOZZLE WITH 5 THREADS PER INCH.

2. STAND PIPE (BREAK-AWAY) COUPLING SHALL NOT EXCEED A MAXIMUM OF 5 INCHES FROM THE TOP OF THE CURB TO THE BOTTOM OF THE COUPLING.
3. THE DRAIN VALVE SHALL BE CLEAR OF ANY OBSTRUCTIONS. A MINIMUM OF 1/3 YARD OF 3/4" CLEAN STONE SHALL BE INSTALLED AND COVERED WITH 8 MIL POLYETHYELENE SHEET.
4. THRUST BLOCKS SHALL BE MADE OF 3,000 PSI CONCRETE.
5. BACKFILL MATERIAL SHALL BE TYPE "C". (AS SPECIFIED)
6. 6" KENNEDY KENSEAL II (RESILIENT SEATED) MECHANICAL JOINT END GATE VALVE (RIGHT HAND).
7. 6" DUCTILE IRON CEMENT LINED CLASS 52 PIPE. JOINTS RESTRAINED.
8. 3/4" DIAMETER TIE ROD WITH EYE BOLTS (JOINT RESTRAINT). 2 REQUIRED. SHOWN IN SIDE VIEW.
9. SEE SURFACE BOX INSTALLATION DETAIL.
10. MECHANICAL JOINT TEE W/RETAINER GLANDS AND TIE RODS.

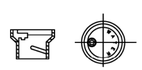

2-1/2" NEW STYLE FLUSH FIT COVER
ONLY COVER IS DIFFERENT STYLE
(NOT TO SCALE)

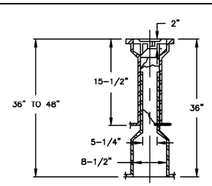

5-1/4" – 2 PIECE SLIDING TYPE
ADJUSTABLE VALVE BOX
TYPE B
(NOT TO SCALE)

VALVE BOX AND COVER

NOT TO SCALE

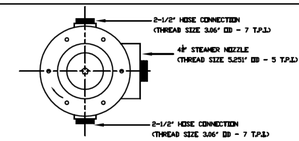

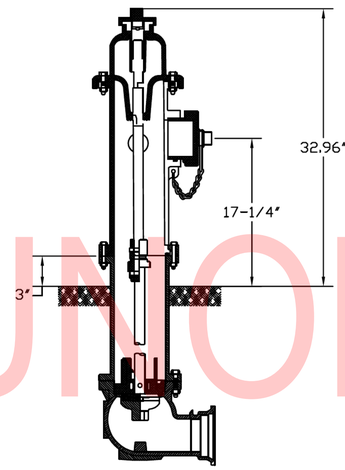

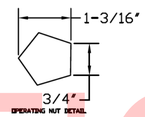

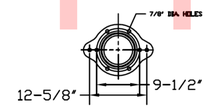

STANDARD FIRE HYDRANT
KENNEDY GUARDIAN, 5 1/4" VALVE OPENING

NOT TO SCALE

NOTES:

1. HYDRANTS SHALL CONFORM TO AWWA C502, LATEST REVISION, RELATING TO FIRE HYDRANTS AND CONFORM WITH THE CITY OF WILMINGTON STANDARDS.
2. HYDRANTS SHALL BE KENNEDY VALVE MODEL GUARDIAN, MUELLER MODEL CENTURION, OR APPROVED EQUAL.
3. HYDRANTS SHALL BE OF TWO PIECE DESIGN WITH A BREAKING RING LOCATED APPROXIMATELY 3-INCHES ABOVE THE GROUND LINE. HYDRANTS SHALL BE PROVIDED WITH A STAND PIPE WITH AN 8-INCH ID, AND 6-INCH DIAMETER MECHANICAL JOINT CONNECTION AND SHALL BE FOR A TYPICAL TRENCH DEPTH OF 4 FEET. EXTENSION COLLARS SHOULD BE PROVIDED AS REQUIRED FOR PROPER SETTING OF HYDRANTS.
4. HYDRANTS SHALL HAVE A COMPRESSION TPE VALVE WITH 5 1/4-INCH DIAMETER OPENING, TWO (2) 2 1/2-INCH HOSE CONNECTIONS (WITH THREAD SIZE 3.06 INCH OD AND 7 THREADS PER INCH). HYDRANTS SHALL HAVE O-RING SEALS AND THE MAIN VALVE SHALL OPEN CLOCKWISE WITH A 19/16-INCH TO 3/4-INCH PENTAGON NUT.
5. PAINTING AND ALL DETAILS SHALL BE IN ACCORDANCE WITH THE CITY OF WILMINGTON STANDARDS.
6. ALL PARTS OF HYDRANTS SHALL BE INTERCHANGEABLE WITH SIMILAR PARTS OF HYDRANTS OF THE SAME SIZE AND TYPE. ALL BOLT HOLES SHALL BE ACCURATELY DRILLED FROM TEMPLATES. ALL JOINTS SHALL BE FACED SMOOTH, SO AS TO MAKE A PERFECTLY WATERTIGHT JOINT.
7. HYDRANTS SHALL BE PROVIDED WITH "BREAKABLE RING" TRAFFIC FLANGE AND BREAKABLE COUPLING STEM. THE TRAFFIC FLANGE SHALL HAVE 360 DEGREES ADJUSTMENT FACILITIES.
8. EACH HYDRANT SHALL BE SHOP TESTED UNDER 300 PSI APPLIED HYDROSTATIC PRESSURE ABOVE AND BELOW THE COMPRESSION VALVE. ANY HYDRANT SHOING SWEATING OF THE METAL OR LEAKING OR OTHER DEFECT SHALL BE REJECTED. ALL TESTS SHALL BE MADE AT THE EXPENSE OF THE SUPPLIER.

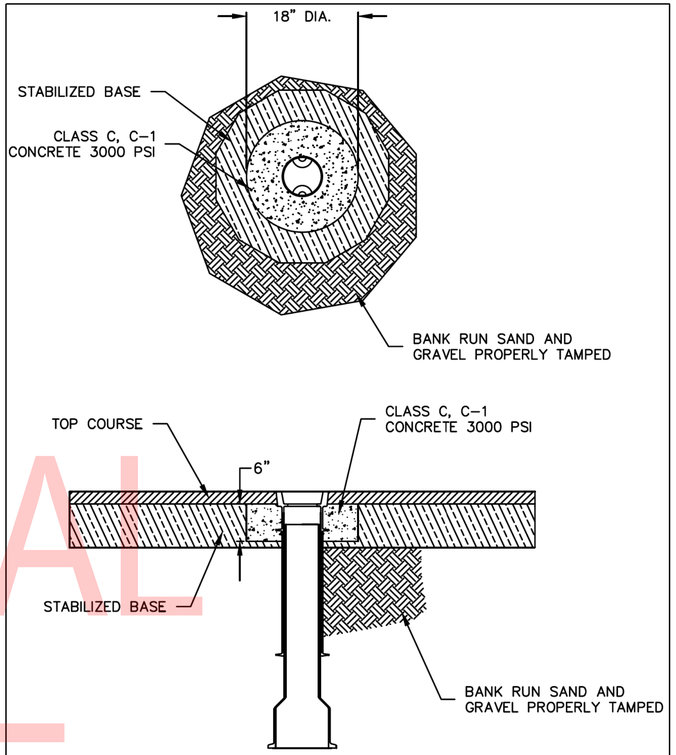

VALVE BOX INSTALLATION DETAIL

NOT TO SCALE

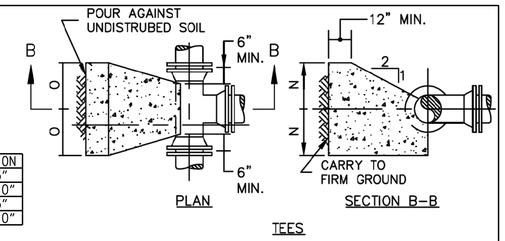

DESCRIPTION	DIMENSION
8"X6"TEE	N: 1'-3"
	O: 1'-10"
6"VERTICAL BEND	P: 1'-3"
	O: 1'-10"

TEES

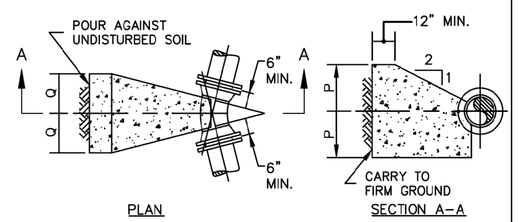

THRUST BLOCKS (200 LB TEST)

NOT TO SCALE

UNOFFICIAL WEBSITE COPY

N:\31987-004\Contract_Ramp_D\CADD\DT03.dgn
8/23/2019 4:35:23 PM

ADDENDA / REVISIONS	

NOT TO SCALE

REHABILITATION OF I-95, 2ND STREET ON-RAMP IMPROVEMENTS

CONTRACT	BRIDGE NO.	
T201907402	DESIGNED BY: J. DAVIS	
COUNTY		
NEW CASTLE	CHECKED BY: B. TOWNSEND	

CONSTRUCTION DETAILS FIRE HYDRANT RELOCATION DETAILS

DT-03
SECTION
SHEET NO. 25

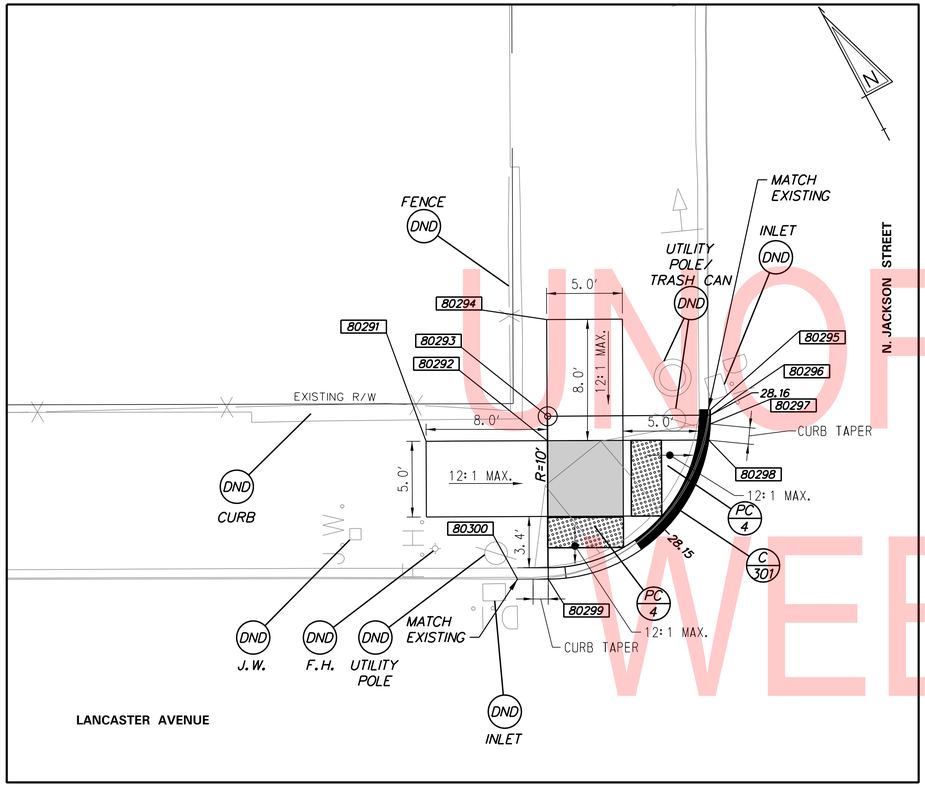

PEDESTRIAN CONNECTION DETAIL

NORTHWEST CORNER OF LANCASTER AVENUE
AND NORTH JACKSON STREET

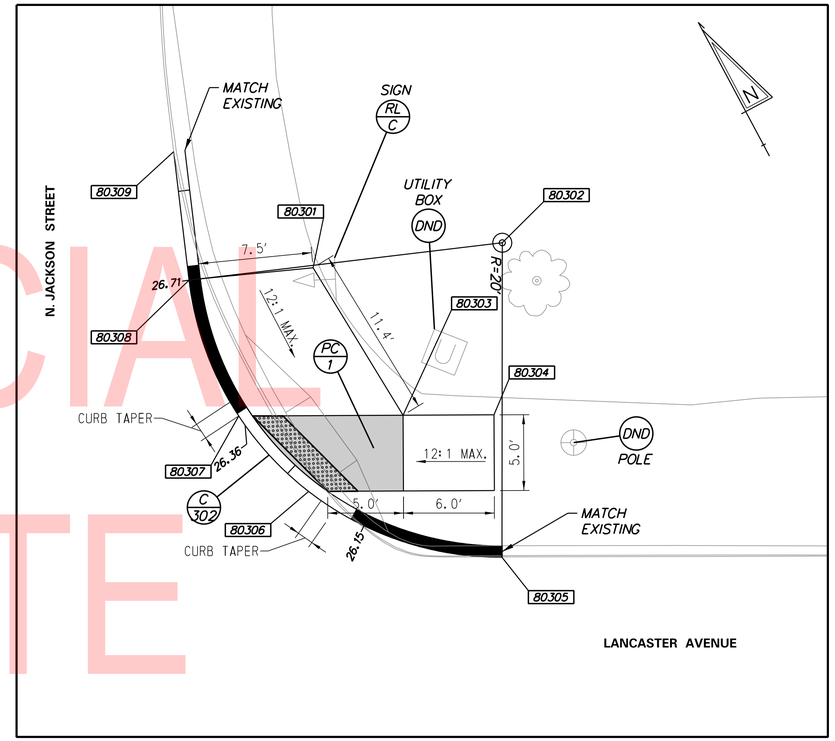

PEDESTRIAN CONNECTION DETAIL

NORTHEAST CORNER OF LANCASTER AVENUE
AND NORTH JACKSON STREET

UNOFFICIAL WEBSITE COPY

LEGEND

50:1 OR FLATTER LANDING AREAS

COORDINATE LIST

POINT NO.	STATION	OFFSET	NORTHING	EASTING
80291	1799+45.70	-10.39'	634490.2470	615162.5658
80292	1799+53.69	-10.41'	634486.5217	615169.6387
80293	1799+53.73	-12.03'	634487.9336	615170.4251
80294	1799+53.67	-18.41'	634493.6000	615173.3668
80295	1799+64.48	-12.44'	634483.2668	615180.1158
80296	1799+64.48	-12.08'	634482.9493	615179.9497
80297	1799+64.46	-11.50'	634482.4371	615179.6637
80298	1799+64.36	-10.43'	634481.5423	615179.0687
80299	1799+53.74	-1.28'	634478.4299	615165.4039
80300	1799+51.71	-1.28'	634479.3761	615163.6136

CURB SCHEDULE

NO.	ITEM DESCRIPTION / TYPE	LENGTH
301	P.C.C. CURB TYPE 1-4	18'
302	P.C.C. CURB TYPE 1-4	38'

COORDINATE LIST

POINT NO.	STATION	OFFSET	NORTHING	EASTING
80301	1800+22.77	-20.34'	634462.9585	615235.3265
80302	1800+35.26	-21.97'	634458.5442	615247.1220
80303	1800+28.69	-10.60'	634451.5740	615235.9927
80304	1800+34.69	-10.61'	634448.7780	615241.3014
80305	1800+35.20	-1.21'	634440.2298	615237.3493
80306	1800+22.44	-5.58'	634450.0659	615228.1266
80307	1800+17.84	-10.57'	634456.6293	615226.3945
80308	1800+14.58	-19.54'	634466.0822	615227.7106
80309	1800+13.58	-28.02'	634474.0423	615230.8017

NOTES:

1. IF UNFORESEEN PHYSICAL LIMITATIONS ARE ENCOUNTERED DURING CONSTRUCTION, THE CONTRACTOR SHALL STOP WORK AND NOTIFY THE ENGINEER. THE CONTRACTOR SHALL RESUME WORK ACTIVITIES AFTER THE ENGINEER DETERMINES IF THE PLAN NEEDS TO BE MODIFIED OR REVISED.
2. IT IS THE RESPONSIBILITY OF THE CONTRACTOR TO USE THE PROPER CONSTRUCTION EQUIPMENT AS NECESSARY TO MEET ACCESSIBILITY REQUIREMENTS AS SET FORTH IN DELDOT'S PEDESTRIAN ACCESSIBILITY STANDARDS FOR FACILITIES IN THE PUBLIC RIGHT OF WAY.
3. THE CONTRACTOR SHALL RECONSTRUCT ANY EXISTING SIDEWALK NEEDED TO ACHIEVE THE REQUIRED GRADES AS SHOWN ON THE PLANS.
4. ALL AREAS WITH PROPOSED CURB SHALL HAVE A 2 FOOT SAWCUT OFFSET FROM THE PROPOSED CURB LINE FOR PAVEMENT PATCHING.

ADDENDA / REVISIONS

SCALE 0 5 10 15 FEET

REHABILITATION OF I-95, 2ND STREET ON-RAMP IMPROVEMENTS

CONTRACT	BRIDGE NO.	
T201907402	DESIGNED BY: J. DAVIS	
COUNTY		
NEW CASTLE	CHECKED BY: B. TOWNSEND	

CONSTRUCTION DETAILS

DT-04

SECTION
WRA
SHEET NO.
26

N:\31987-004\Contract_Ramp_D\CADD\DT04.dgn
9/13/2019 10:55:14 AM

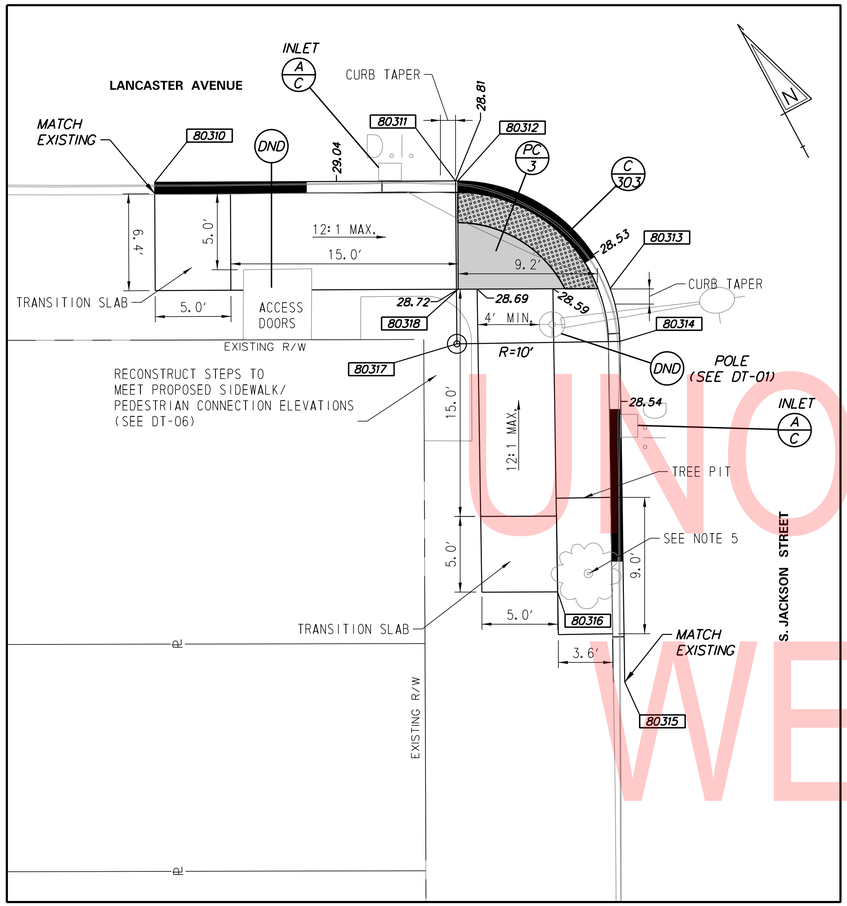

PEDESTRIAN CONNECTION DETAIL

SOUTHWEST CORNER OF LANCASTER AVENUE AND SOUTH JACKSON STREET

*ELEVATIONS PROVIDED ALONG CURB LINE MATCH EXISTING CONDITIONS. ELEVATIONS PROVIDED AT PEDESTRIAN CONNECTION LANDING ARE PROPOSED TO MEET ADA STANDARD 50:1 MAX SLOPE.

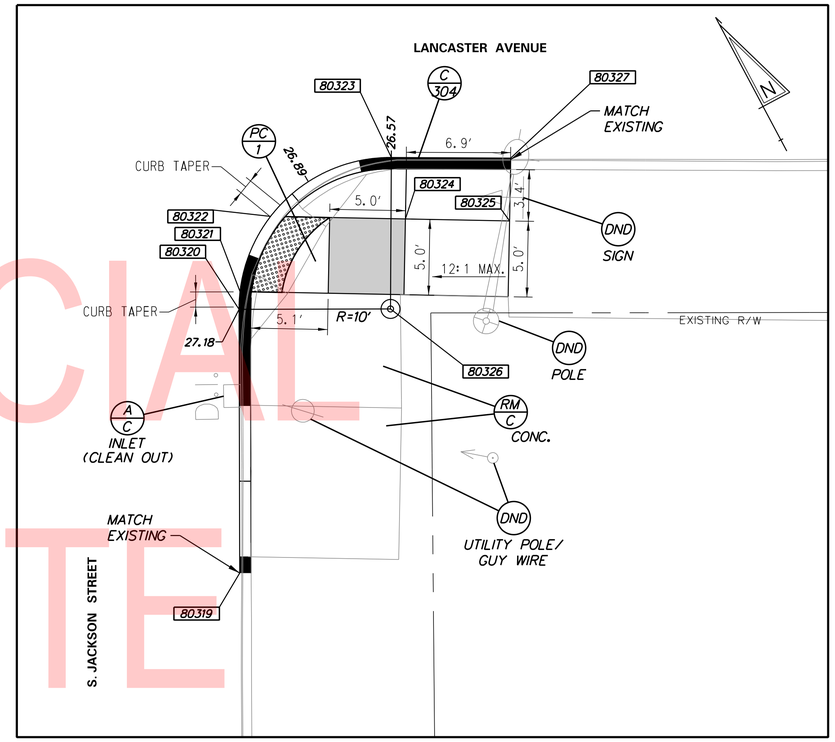

PEDESTRIAN CONNECTION DETAIL

SOUTHEAST CORNER OF LANCASTER AVENUE AND SOUTH JACKSON STREET

LEGEND

50:1 OR FLATTER LANDING AREAS

NOTES:

1. IF UNFORESEEN PHYSICAL LIMITATIONS ARE ENCOUNTERED DURING CONSTRUCTION, THE CONTRACTOR SHALL STOP WORK AND NOTIFY THE ENGINEER. THE CONTRACTOR SHALL RESUME WORK ACTIVITIES AFTER THE ENGINEER DETERMINES IF THE PLAN NEEDS TO BE MODIFIED OR REVISED.
2. IT IS THE RESPONSIBILITY OF THE CONTRACTOR TO USE THE PROPER CONSTRUCTION EQUIPMENT AS NECESSARY TO MEET ACCESSIBILITY REQUIREMENTS AS SET FORTH IN DELDOT'S PEDESTRIAN ACCESSIBILITY STANDARDS FOR FACILITIES IN THE PUBLIC RIGHT OF WAY.
3. THE CONTRACTOR SHALL RECONSTRUCT ANY EXISTING SIDEWALK NEEDED TO ACHIEVE THE REQUIRED GRADES AS SHOWN ON THE PLANS.
4. ALL AREAS WITH PROPOSED CURB SHALL HAVE A 2 FOOT SAWCUT OFFSET FROM THE PROPOSED CURB LINE FOR PROPOSED PAVEMENT PATCH.
5. THE CONTRACTOR SHALL REMOVE THE EXISTING TREE AND STUMP/ROOT MASS. THE EXISTING MATERIAL SHALL BE REMOVED/EXCAVATED FROM THE TREE PIT AND THE TREE PIT SHALL BE BACKFILLED WITH A SUITABLE PLANTING SOIL FOR A NEW TREE. DELDOT AND THE CITY OF WILMINGTON WILL COORDINATE THE PLANTING OF A NEW TREE FOLLOWING THE CONCLUSION OF THIS CONTRACT. ALL WORK TO REMOVE THE TREE AND PREPARE THE TREE PIT FOR FUTURE USE SHALL BE INCIDENTAL TO ITEM 201000 CLEARING AND GRUBBING.

CURB SCHEDULE

NO.	ITEM DESCRIPTION / TYPE	LENGTH
303	P.C.C. CURB TYPE 1-4	58'
304	P.C.C. CURB TYPE 1-4	41'

COORDINATE LIST

POINT NO.	STATION	OFFSET	NORTHING	EASTING
80310	400+36.71	47.34'	634454.1791	615129.9999
80311	400+36.67	27.48'	634444.9198	615147.5699
80312	400+36.67	27.34'	634444.8528	615147.6961
80313	400+43.80	17.29'	634433.8571	615153.2374
80314	400+47.29	16.66'	634430.4762	615152.1588
80315	400+69.77	16.39'	634410.4811	615141.8817
80316	400+63.81	20.81'	634417.8187	615140.7708
80317	400+47.42	27.41'	634435.3882	615142.5967
80318	400+43.82	27.32'	634438.5312	615144.3628

COORDINATE LIST

POINT NO.	STATION	OFFSET	NORTHING	EASTING
80319	400+64.27	-17.74'	634399.3701	615174.6192
80320	400+46.86	-17.74'	634414.7532	615182.7627
80321	400+45.69	-17.81'	634415.7564	615183.3715
80322	400+40.73	-19.84'	634419.1886	615187.4844
80323	400+36.86	-27.81'	634418.8784	615196.3450
80324	400+40.92	-28.73'	634414.8572	615195.2596
80325	400+41.07	-35.61'	634411.5103	615201.2674
80326	400+46.86	-27.74'	634410.0759	615191.5999
80327	400+36.92	-35.69'	634415.1410	615203.2781

UNOFFICIAL WEBSITE COPY

ADDENDA / REVISIONS

SCALE 0 5 10 15 FEET

REHABILITATION OF I-95, 2ND STREET ON-RAMP IMPROVEMENTS

CONTRACT	BRIDGE NO.	
T201907402	DESIGNED BY: J. DAVIS	
COUNTY		
NEW CASTLE	CHECKED BY: B. TOWNSEND	

CONSTRUCTION DETAILS

DT-05

SECTION: WRA

SHEET NO. 27

N:\31987-004\Contract_Ramp_D\C4D\DT05.dgn 8/2/2019 3:14:34 PM

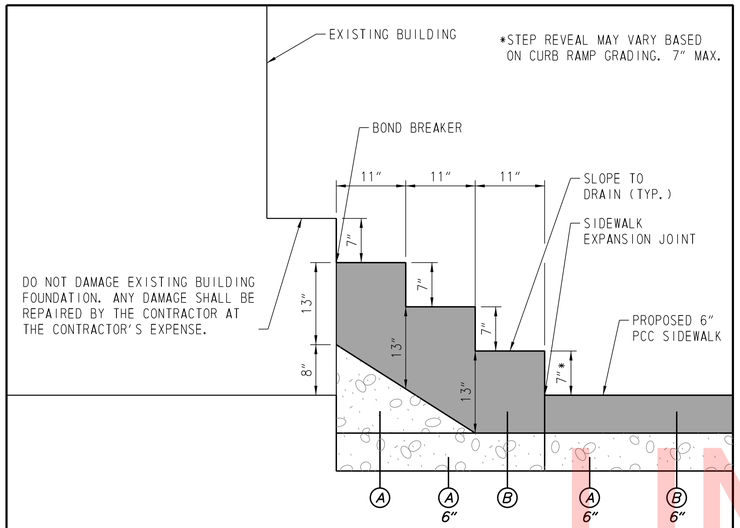

(A) ITEM 301001 - GRADED AGGREGATE BASE COURSE, TYPE B

(B) ITEM 610009 - PORTLAND CEMENT CONCRETE MASONRY, CLASS B

STEP RECONSTRUCTION DETAIL (SECTION)

NOT TO SCALE

SOUTHWEST CORNER AT LANCASTER AVE AND S. JACKSON ST. (SEE DT-05)

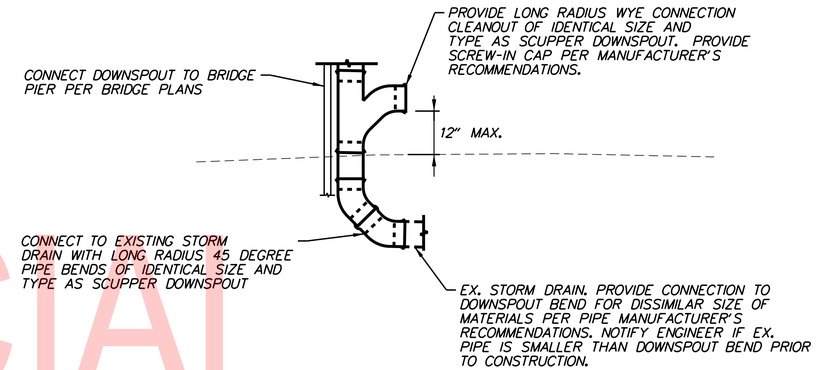

BRIDGE SCUPPER DOWNSPOUT DETAIL

NOT TO SCALE

NOTE: PAYMENT FOR CLEANOUTS AND EXCAVATION WILL BE INCIDENTAL TO ITEM 615000.

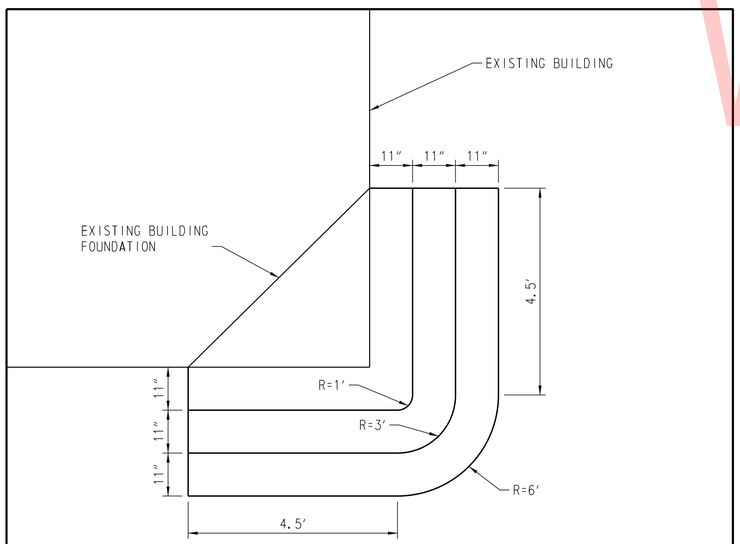

STEP RECONSTRUCTION DETAIL (PLAN)

NOT TO SCALE

SOUTHWEST CORNER AT LANCASTER AVE AND S. JACKSON ST. (SEE DT-05)

UNOFFICIAL WEBSITE COPY

ADDENDA / REVISIONS	SCALE 0 5 10 15 FEET	REHABILITATION OF I-95, 2ND STREET ON-RAMP IMPROVEMENTS	CONTRACT T201907402	BRIDGE NO.	CONSTRUCTION DETAILS	DT-06 SECTION WRA
			COUNTY NEW CASTLE	DESIGNED BY: K. VOLZ		SHEET NO. 28
				CHECKED BY: J. COSLER		

N:\31987-094\Contract_Ramp_D\CADD\DT06.dgn
8/23/2019 4:36:07 PM

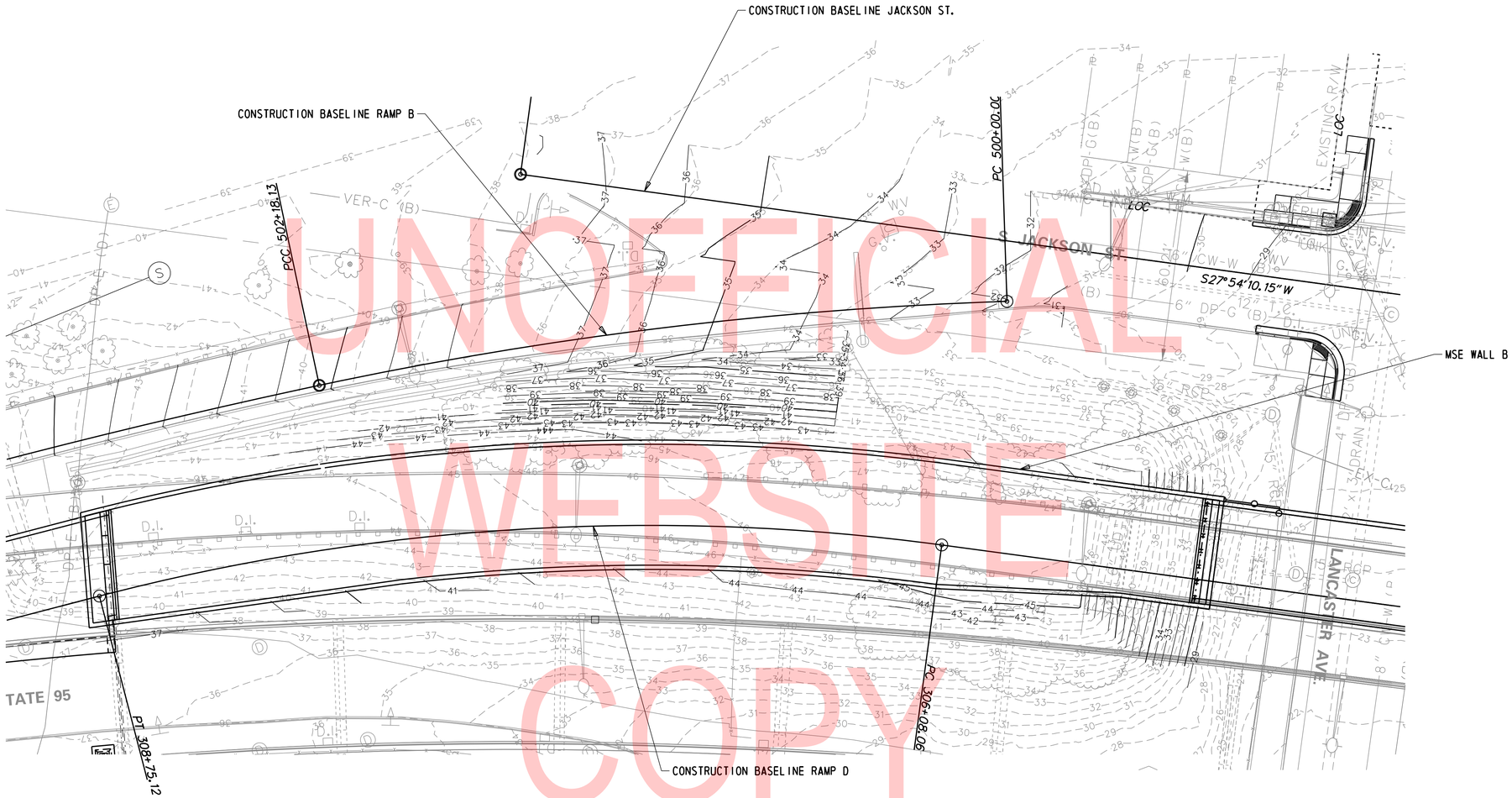

UNOFFICIAL WEBSITE COPY

PLAN

1" =20'

NOTES:

1. SEE BR 1-750 DWG. PE-01 FOR DISPOSITION OF UTILITIES.

N:\31987-004\Contract_Ramp_D\CADD\Bridge\BR1-748S_GR01.dgn
8/23/2019 4:37:32 PM

ADDENDA / REVISIONS	

SCALE 0 20 40 60 FEET

REHABILITATION OF I-95, 2ND STREET ON-RAMP IMPROVEMENTS

CONTRACT	BRIDGE NO.	
T201907402	DESIGNED BY: D. NIZAMOFF	
COUNTY		
NEW CASTLE	CHECKED BY: W. GESCHREI	

GRADING PLAN

GR-01
SECTION
WRA
SHEET NO.
29

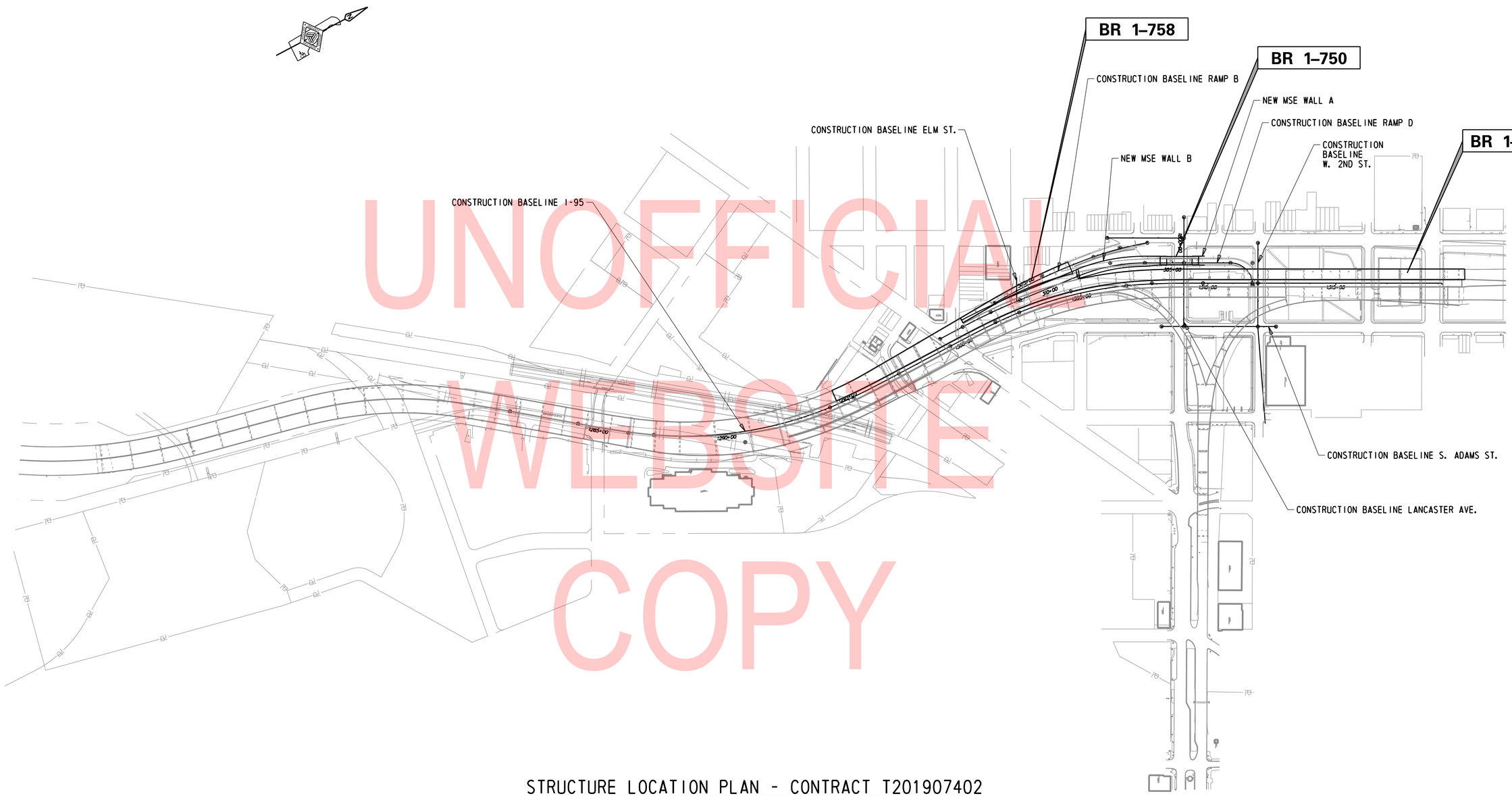

UNOFFICIAL WEBSITE COPY

STRUCTURE LOCATION PLAN - CONTRACT T201907402

N:\31987-004\Contract_Ramp_D\CADD\Bridge\BR_IS05.dgn
8/23/2019 4:30:14 PM

ADDENDA / REVISIONS	

SCALE
0 200 400 600
FEET

REHABILITATION OF I-95, 2ND STREET ON-RAMP IMPROVEMENTS

CONTRACT	BRIDGE NO.	
T201907402	DESIGNED BY: D. NIZAMOFF	
COUNTY		
NEW CASTLE	CHECKED BY: W. GESCHREI	

STRUCTURE LOCATION PLAN

IS–02
SECTION
WRA
SHEET NO.
30

SECTION 200

1. REMOVAL OF STRUCTURES AND OBSTRUCTIONS:
   ITEMS TO BE REMOVED UNDER ITEM 211000 - REMOVAL OF STRUCTURES AND OBSTRUCTIONS ASSOCIATED WITH BRIDGE 1-748S SHALL INCLUDE, BUT NOT BE LIMITED TO, THE FOLLOWING:
   - EXTERIOR PARAPETS (SPANS 26S TO 39S)
   - EXTERIOR DECK OVERHANGS (SPANS 26S TO 39S)
   - STEEL SIGN SUPPORT BRACKETS
   - TRAFFIC SIGNS AND LIGHT POLES ATTACHED TO BRIDGE
   - DECORATIVE BARRIER (SPANS 26S-28S AND PARTIAL IN SPAN 25S)
   - CONCRETE DECK AROUND TYPE III SCUPPERS IN SPANS 35S, 37S, AND 39S.
   - PORTIONS OF DRAINAGE AND SEWER PIPES TO BE ABANDONED WHERE THEY INTERFERE WITH PROPOSED FOUNDATIONS.

2. SIGNING:
   TO AVOID DAMAGE, SIGNS WITHIN PROJECT LIMITS MAY BE REMOVED DURING CONSTRUCTION IF NEEDED, BUT MUST BE REPLACED TO MATCH EXISTING CONDITIONS BEFORE REOPENING THE ROADWAY. ALL WORK RELATED TO MOVING AND REINSTALLING THE SIGN SHALL BE INCIDENTAL TO ITEM 211000 - REMOVAL OF STRUCTURES AND OBSTRUCTIONS. IF THE SIGN IS DAMAGED DURING CONSTRUCTION, THE SIGN SHALL BE REPLACED AT THE CONTRACTOR'S EXPENSE.

SECTION 600

3. PORTLAND CEMENT CONCRETE:
   USE PORTLAND CEMENT CONCRETE FOR CAST-IN-PLACE ELEMENTS AS FOLLOWS:
   (f'c = 28-DAY COMPRESSIVE STRENGTH)
   CLASS A - PARAPETS, ABUTMENT STEM AND BACKWALL, PEDESTALS (f'c = 4.5 ksi)
   CLASS B - FOOTINGS, COLUMNS, PIER CAPS (f'c = 3.0 ksi)
   CLASS D - DECK, APPROACH SLABS, SLEEPER SLABS (f'c = 4.5 ksi)
   A HIGHER CLASS CONCRETE MAY BE SUBSTITUTED FOR A LOWER CLASS CONCRETE AT NO ADDITIONAL COST TO THE DEPARTMENT WITH THE APPROVAL OF THE ENGINEER.
   - CHAMFER ALL EXPOSED EDGES ¾" X ¾" UNLESS OTHERWISE NOTED.
   - DO NOT SLIP-FORM PARAPETS, UNLESS OTHERWISE APPROVED BY THE ENGINEER.
   - CONTRACTOR SHALL SUPPLY CONCRETE FOR THE PARAPETS, BRIDGE DECK, AND APPROACH SLABS THAT INCLUDES A SHRINKAGE-REDUCING/COMPENSATING ADMIXTURE. PAYMENT FOR ADMIXTURE WILL BE INCIDENTAL TO ITS RESPECTIVE CONCRETE ITEM (ITEMS 610008, 610016, 610017, AND 610018). THE ADMIXTURE MAY BE SUPPLIED BY ONE PRODUCT THAT PROVIDES BOTH EXPANSION AND PORE WATER SURFACE TENSION OR TWO SEPARATE PRODUCTS EACH ADDED AT DOSAGE RECOMMENDED BY MANUFACTURER'S TECHNICAL DATA SHEETS AND HAVING THE FOLLOWING CHARACTERISTICS:
   (A) DESIGNED TO PROVIDE BOTH THE FOLLOWING CHARACTERISTICS:
   I. EXPANDS AT A RATE THAT CLOSELY COMPENSATES FOR SHRINKAGE OF THE CONCRETE MIX.
   II. REDUCES THE CAPILLARY SURFACE TENSION OF THE CONCRETE PORE WATER.
   (B) PROVIDES AT LEAST 80% SHRINKAGE REDUCTION AS MEASURED AND DOCUMENTED BY FIELD PERFORMANCE.
   (C) FORMULATED FOR USE IN FREEZING AND THAWING WEATHER.

4. BAR REINFORCEMENT:
   - REINFORCING STEEL SHALL CONFORM TO AASHTO M 31 (ASTM A615), GRADE 60.
   - REINFORCING STEEL SHALL HAVE A 3" CLEAR COVER IF CAST AGAINST EARTH OR A 2" CLEAR COVER ELSEWHERE, UNLESS OTHERWISE SPECIFIED ON THE PLANS.
   - ALL REINFORCING STEEL SHALL BE PROTECTED WITH FUSION BONDED EPOXY UNLESS OTHERWISE SPECIFIED ON THE PLANS. EPOXY COATED REINFORCING STEEL SHALL CONFORM TO ASTM A775.
   - ANY FIELD CUTTING OR FIELD BENDING MUST BE APPROVED BY THE ENGINEER UNLESS NOTED ON THE PLANS. PAYMENT FOR FIELD CUTTING AND FIELD BENDING WILL BE INCIDENTAL TO THE BAR REINFORCEMENT ITEM.
   - GALVANIZED REINFORCING STEEL MAY BE SUBSTITUTED FOR EPOXY-COATED REINFORCING STEEL AT NO ADDITIONAL COST TO THE DEPARTMENT WITH THE APPROVAL OF THE ENGINEER.
   - WELDING OF REINFORCEMENT DURING FABRICATION OR CONSTRUCTION WILL NOT BE PERMITTED UNLESS SPECIFIED.

5. CONCRETE SEALER:
   REFER TO DIAGRAMS CONTAINING SILICONE-BASED ACRYLIC CONCRETE SEALER LIMITS ON PARAPETS AND DECK OVERHANGS ON DWGS. TS-01 TO TS-04 AND AS-02. EPOXY CONCRETE SEALER SHALL BE APPLIED TO THE BEAM SEATS AND BEARING PEDESTALS AT PIERS 23 TO 26. SILICONE-BASED ACRYLIC CONCRETE SEALER SHALL BE APPLIED TO THE REMAINING EXPOSED CONCRETE SURFACES AT PIERS 23 TO 26. PAYMENT FOR SILICONE-BASED ACRYLIC CONCRETE SEALER AND EPOXY CONCRETE SEALER WILL BE MADE UNDER ITEMS 613001 AND 613000, RESPECTIVELY.

SECTION 600 (CONTINUED)

6. STRUCTURAL STEEL:
   PROVIDE STRUCTURAL STEEL CONFORMING TO AASHTO M 270, GRADE 50 (ASTM A709, GRADE 50) DESIGNATION, EXCEPT WHEN NOTED OTHERWISE. THE ADDITIONAL REQUIREMENTS FOR CHARPY V-NOTCH TESTING (DENOTED AS 'CVN' ON PLANS) OF AASHTO M 270 FOR PRIMARY LOAD CARRYING MEMBERS SHALL BE INCLUDED. SUPPLEMENTAL NOTCH TOUGHNESS REQUIREMENTS ARE MANDATORY FOR:
   - TOP AND BOTTOM GIRDER FLANGES AS SHOWN ON PLANS
   - GIRDER WEB PLATES AS SHOWN ON PLANS
   - ALL DIAPHRAGM MEMBERS AND DIAPHRAGM CONNECTION PLATES

   ALL FASTENERS ARE 1" DIAMETER ASTM F3125 GR A325 HIGH STRENGTH BOLTS, TYPE 1, UNLESS OTHERWISE NOTED.

   PROVIDE MATERIALS AND PERFORM WORK IN ACCORDANCE WITH AASHTO/AWS D1.5M/1.5:2015 BRIDGE WELDING CODE, AND CONTRACT DOCUMENTS. MAKE TACK WELDS WITH THE SAME TYPE OF ELECTRODE AND INCORPORATE IN THE FINAL WELD. NO OTHER TACK WELDING WILL BE PERMITTED.

   DO NOT MAKE WELDS BY MANUAL SHIELDED METAL ARC PROCESS FOR PRIMARY GIRDER WELDS SUCH AS FLANGE TO WEB WELDS OR FOR SHOP SPLICES OF WEB AND FLANGES.

   DO NOT USE FORM SUPPORT SYSTEMS THAT WILL CAUSE UNACCEPTABLE OVERSTRESS OR DEFORMATION TO PERMANENT BRIDGE MEMBERS.

   THE FASCIA GIRDERS ARE DESIGNED FOR A TEMPORARY CONSTRUCTION LOAD APPLIED TO THE WEB WITHIN 6" OF THE BOTTOM FLANGE AT APPROXIMATELY 4'-0" INTERVALS. THIS LOAD APPROXIMATES THE HORIZONTAL COMPONENT OF A DECK SLAB OVERHANG FORM SUPPORT BRACKET AND CONSISTS OF A 0.465 KIP/FT ALLOWANCE FOR THE WEIGHT OF CONCRETE, FORMS, SCREED RAILING AND WALKWAY, AND A 3 KIP MOVING LOAD FOR THE DECK FINISHING MACHINE.

   SHOP ASSEMBLE THE ENTIRE STEEL SUPERSTRUCTURE INCLUDING TRANSVERSE GIRDERS FOLLOWING THE SAME ERECTION PROCEDURES AND SUPPORT CONDITIONS TO ENSURE PROPER FIT FOR ALL STRUCTURAL STEEL COMPONENTS PRIOR TO REAMING OF BOLT HOLES FOR SPLICES AND DIAPHRAGM CONNECTION PLATES.

   VERTICALLY ADJUST STAY-IN-PLACE FORMS TO ATTAIN FINISHED LINES AND GRADES REQUIRED ON THE PLANS.

   USE OVERSIZED HOLES ON DIAPHRAGM CONNECTORS. ALL BOLTS ON DIAPHRAGMS MUST BE FINGER TIGHT AT ERECTION. BOLTS ARE TO BE TORQUED BEFORE CONCRETE DECK IS POURED.

   SET ANCHOR BOLTS TO TEMPLATE OR IN PRE-FORMED HOLES. DO NOT DRILL UNLESS SPECIFICALLY INDICATED ON PLANS. FILL THE PRE-FORMED HOLES WITH NON-SHRINK GROUT. IN MASONRY PLATES, FILL THE CLEARANCE BETWEEN ANCHOR BOLTS AND HOLES WITH APPROVED NON-HARDENING CAULKING COMPOUND.

   STABILITY OF GIRDERS, PARTIAL GIRDERS AND COMPLETED GIRDERS IS TO BE MAINTAINED BY THE CONTRACTOR DURING ERECTION UNTIL ALL GIRDERS AND DIAPHRAGMS ARE IN-PLACE AND ALL BOLTS ARE PROPERLY INSTALLED. ERECTION LOADS INCLUDING SELF-WEIGHT OF THE STEEL MEMBERS, WIND LOADING AND CONSTRUCTION LIVE LOAD EFFECTS ARE TO BE EVALUATED BY THE CONTRACTOR FOR STABILITY, STRESSES AND DEFLECTIONS ON THE STEEL MEMBERS DURING ANY STAGE OF ERECTION.

   BLAST CLEAN THE FAYING SURFACES OF SPLICES AND CONNECTIONS THAT REMAIN UNASSEMBLED FOR A PERIOD OF 12 MONTHS OR MORE FOLLOWING THE INITIAL CLEANING.

   PAINTING OF EXISTING AND NEW STRUCTURAL STEEL SHALL BE IN ACCORDANCE WITH SECTION 616. EXISTING STEEL SHALL BE PAINTED AS INDICATED IN PLANS.

7. BEARINGS:
   STEEL PLATE FIXED BEARINGS SHALL BE IN ACCORDANCE WITH THE REQUIREMENTS OF SECTION 615 AND IN ACCORDANCE WITH CHAPTER 18 OF THE 2017 AASHTO LRFD BRIDGE CONSTRUCTION SPECIFICATIONS, 4TH EDITION. PAYMENT FOR STEEL PLATE FIXED BEARINGS WILL BE MADE UNDER ITEM 615001 - STEEL STRUCTURES.

   BRONZE SLIDING PLATE EXPANSION BEARINGS SHALL CONFORM TO ITEM 623500 - BRONZE BEARINGS. PAYMENT WILL BE MADE UNDER ITEM 623500.

SECTION 800

8. TEMPORARY MOUNTED BARRIERS:
   THE CONTRACTOR SHALL SUBMIT TO THE ENGINEER FOR APPROVAL A WORKING DRAWING SUBMITTAL DETAILING THE PROPOSED MEANS AND METHODS TO ANCHOR THE PORTABLE P.C.C. STRUCTURE MOUNTED BARRIER (DESIGNED FOR TL-3 IMPACT LOADING) AND TO REPAIR THE BOLT HOLES IN THE DECK. THE CONTRACTOR SHALL ADJUST THE LOCATION OF ANCHORS TO AVOID CONFLICT WITH TOP FLANGE OF GIRDERS AND BAR REINFORCEMENT IN THE DECK. PAYMENT WILL BE INCIDENTAL TO ITEM 807003 - FURNISH AND INSTALL TEMPORARY PCC SAFETY BARRIER, PINNED IN CONCRETE.

9. SAWCUTTING:
   ALL PAVED AREAS TO BE RECONSTRUCTED OR WIDENED SHALL BE SAWCUT AT THE POINT WHERE THE NEW PAVEMENT IS TO TIE INTO THE EXISTING PAVEMENT. ALL HOT-MIX OR P.C.C. SAWCUTTING SHALL BE FULL DEPTH, UNLESS OTHERWISE NOTED ON THE PLANS, OR AS DIRECTED BY THE ENGINEER.

MISCELLANEOUS

10. DESIGN SPECIFICATIONS:
    (A) DELDOT BRIDGE DESIGN MANUAL, 2017 EDITION.
    (B) 2014 AASHTO LRFD BRIDGE DESIGN SPECIFICATIONS, 7TH EDITION, U.S. CUSTOMARY UNITS INCLUDING 2015 AND 2016 INTERIM.
    (C) PROVIDE MATERIALS AND PERFORM WORK IN ACCORDANCE WITH THE 2016 DELDOT STANDARD SPECIFICATIONS INCLUDING 2018 SUPPLEMENTAL SPECIFICATIONS.

11. LOADING:
    - DEAD LOADS INCLUDE 25 PSF FOR FUTURE WEARING SURFACE ON DECK SLAB AND 15 PSF FOR STAY-IN-PLACE FORMS (INCLUDES CONCRETE IN FORM CORRUGATIONS).
    - DESIGN LIVE LOADS INCLUDE HL-93 LOADING.
    - FATIGUE DESIGN IS BASED ON THE FOLLOWING ONE DIRECTIONAL TRAFFIC VOLUMES: ADTT = 3,910 IN YEAR 2040.
    - LIVE LOAD DISTRIBUTION TO THE GIRDERS IS BASED ON THE AASHTO SIMPLIFIED METHOD.
    - THERMAL LOADS AND MOVEMENTS ARE BASED ON THE MODERATE TEMPERATURE RANGE AS STIPULATED IN THE AASHTO LRFD DESIGN SPECIFICATIONS AS 0° TO 110°F. THE NORMAL TEMPERATURE SHALL BE CONSIDERED TO BE 68° F.
    - LIVE LOAD DEFLECTION SHALL BE LIMITED TO L/800.
    - FOR SEISMIC LOADS, CONSIDER SEISMIC PERFORMANCE ZONE 1, WITH A SITE CLASS = D AND OPERATIONAL CATEGORY = ESSENTIAL.
    - FOR REINFORCEMENT DISTRIBUTION REQUIREMENTS, CONSIDER CLASS 1 EXPOSURE CRITERIA FOR DECKS.
    - PARAPETS HAVE BEEN DESIGNED FOR MASH TEST LEVEL 4 (TL-4).

12. EXISTING CONDITIONS:
    ALL EXISTING DIMENSIONS AND ELEVATIONS SHOWN ARE BASED ON THE BEST AVAILABLE INFORMATION AND ARE APPROXIMATE ONLY. THE CONTRACTOR SHALL FIELD VERIFY ALL EXISTING DIMENSIONS, GEOMETRY, AND ELEVATIONS AS NECESSARY PRIOR TO ORDERING ANY MATERIALS AND COMMENCING CONSTRUCTION TO ENSURE PROPER FIT OF THE PROPOSED CONSTRUCTION. PAYMENT WILL BE INCIDENTAL TO ITEM 763501 - CONSTRUCTION ENGINEERING.

13. ROADWAY CLEARANCES:
    A MINIMUM OF 16'-6" SHALL BE MAINTAINED ABOVE ALL ROADWAYS.

14. CONTINGENT QUANTITIES:
    THESE CONTRACT DRAWINGS HAVE BEEN PREPARED BASED ON ORIGINAL CONTRACT PLANS, SHOP DRAWINGS, AND FIELD INSPECTION NOTES TAKEN FROM NOVEMBER 16, 2014 THROUGH FEBRUARY 5, 2015. ADDITIONAL REPAIRS HAVE BEEN ADDED BASED ON THE MARCH 2017 BIENNIAL BRIDGE INSPECTION REPORT. ACTUAL CONDITIONS MAY REQUIRE MODIFICATION IN CONSTRUCTION DETAILS AND WORK QUANTITIES. ALL DIMENSIONS AND DETAILS SHOWN ON THE PLANS SHALL BE VERIFIED BY THE CONTRACTOR PRIOR TO ORDERING ANY MATERIALS. SEE DWG. PN-03 FOR PAY ITEM CONTINGENCY PERCENTAGES.

15. UTILITIES:
    SEE UTILITY STATEMENT AND UTILITY RELOCATION PLAN SHEETS FOR FURTHER INFORMATION ON UTILITY COORDINATION.

    THE CONTRACTOR SHALL CALL MISS UTILITY AND LOCATE ALL UNDERGROUND UTILITIES BEFORE COMMENCING ANY EXCAVATION OR INSTALLING ANY FOUNDATIONS.

16. ENVIRONMENTAL COMPLIANCE:
    ENVIRONMENTAL COMPLIANCE PLANS ARE NOT REQUIRED FOR THIS PROJECT. NO ENVIRONMENTAL RESOURCES ARE IMPACTED BY THE PROPOSED WORK.

UNOFFICIAL WEBSITE COPY

MISCELLANEOUS (CONTINUED)

17. COORDINATION WITH DART:
BRIDGE NO. 1-748S IS LOCATED OVER PARKING LOTS OCCUPIED BY DART. THE CONTRACTOR SHALL NOTIFY VINCENT DAMIANI AT (302) 598-0570 AND DAVID REESE AT (302) 353-0897 AT LEAST 35 DAYS PRIOR TO THE START OF ANY WORK IN THE DART PARKING LOTS. AFTER THIS INITIAL CONTACT, THE CONTRACTOR SHALL NOTIFY DART 14 DAYS IN ADVANCE OF ANY ADDITIONAL COORDINATION REQUIREMENTS AND/OR CHANGES IN THE TRAFFIC PATTERNS. AT NO TIME SHALL THE CONTRACTOR OCCUPY AN AREA ON THE GROUND IN THE PARKING LOTS GREATER THAN THE AREA OF TWO SPANS. THE CONTRACTOR SHALL MAINTAIN ACCESS FOR DART BUSSES AND EMPLOYEES TO THE REMAINING PORTIONS OF THE PARKING LOT. ADDITIONALLY THE CONTRACTOR WILL NOT BE PERMITTED TO WORK IN MORE THAN ONE PARKING LOT AT A TIME.

18. COORDINATION WITH THE CITY OF WILMINGTON:
THE CONTRACTOR SHALL COORDINATE ALL WORK WITH THE CITY OF WILMINGTON, ESPECIALLY WORK WHICH IMPACTS CITY STREETS. THE CONTRACTOR SHALL NOTIFY BRIAN MITCHELL AT (302) 576-3089 AT LEAST 14 DAYS PRIOR TO ANY COORDINATION REQUIREMENTS AND/OR CHANGES IN TRAFFIC PATTERNS.

19. CONTRACTOR SUBMISSIONS:
PRIOR TO OR WITH THE SHOP DRAWINGS, THE CONTRACTOR SHALL SUBMIT THE FIELD VERIFICATION NOTES ON MEMBER SIZES AND DIMENSIONS NECESSARY TO REVIEW THE SHOP DRAWINGS.

20. CONSTRUCTION FENCE:
PORTABLE CHAINLINK FENCE IS REQUIRED AROUND THE PERIMETER OF ALL BELOW-DECK WORK AREAS AND AT LOCATIONS DIRECTED BY THE ENGINEER. PAYMENT WILL BE MADE UNDER ITEM 727548 - PORTABLE CHAINLINK FENCE. SEE DWGS. CS-01 TO CS-301.

21. CLEARING AND GRUBBING:
ALL VEGETATIVE GROWTH SHALL BE REMOVED FROM THE PIERS, ABUTMENTS, AND SUPERSTRUCTURE ELEMENTS TO REMAIN AS DIRECTED BY THE ENGINEER. PAYMENT WILL BE INCIDENTAL TO ITEM 201000 - CLEARING AND GRUBBING.

22. CONTRACT RESTRICTIONS:
THE DEPARTMENT HAS NOT OBTAINED A NOISE WAIVER UNDER THE PROVISIONS OF THE CITY OF WILMINGTON CODE FOR THE PURPOSE OF WORKING EXTENDED HOURS AT NIGHT. WORKING HOURS FOR THIS PROJECT SHALL BE LIMITED TO 8:00AM TO 7:00PM, MONDAY THROUGH FRIDAY; 9:00AM TO 7:00PM SATURDAY; 10:00AM TO 5:00PM SUNDAY AND HOLIDAYS. THE CONTRACTOR MAY COORDINATE AND SUBMIT TO OBTAIN A NOISE WAIVER FOR PURPOSES OF EXPEDITING HIS CONSTRUCTION EFFORTS AT NO ADDITIONAL COST TO THE DEPARTMENT. THE CONTRACTOR SHALL ADDRESS ANY CONCERNS ABOUT THE NOISE WAIVER TO THE DEPARTMENT OF LICENSES AND INSPECTIONS, CITY OF WILMINGTON, 800 FRENCH ST., 5TH FLOOR, WILMINGTON, DELAWARE 19801. THE DEPARTMENT WILL NOT BE HELD RESPONSIBLE FOR ANY ISSUES/DELAYS/OR REJECTIONS WITH THE COORDINATION, RECEIPT OR EXECUTION OF THE WORK IN CONJUNCTION WITH THE NOISE WAIVER AND CANNOT BE CAUSE FOR A DELAY CLAIM.

IN ADDITION, BRIDGE AND ROAD CLOSURES WILL NOT BE PERMITTED ON THE FOLLOWING WEEKENDS:
T.B.D.

NOTE: THESE ARE PROJECTED DATES AND SHALL BE CONFIRMED WITH THE CITY OF WILMINGTON'S EVENTS CALENDAR.

http://sites.google.com/site/wilmingtoneventswept/Home

FOR ADDITIONAL WORK RESTRICTIONS, SEE THE CONSTRUCTION PHASING, M.O.T. AND EROSION CONTROL PLAN SHEETS ON DWGS. CS-01 TO CS-301.

23. STOCKPILES:
STOCKPILES OF BORROW AND/OR OTHER MATERIALS WILL NOT BE ALLOWED UNDER THE BRIDGES AND NEAR BRIDGE FOUNDATIONS.

24. ABBREVIATIONS:

ACCEL. = ACCELERATION
BOT. = BOTTOM
C/C = CENTER-TO-CENTER
℄ = CENTERLINE
CLR. = CLEAR
DIA. = DIAMETER
DWG. = DRAWING
E.F. = EACH FACE
EL. = ELEVATION
EQ = ENTIRE QUANTITY
EXP. = EXPANSION
F.F. = FRONT FACE
FIX. = FIXED
ITS = INTELLIGENT TRANSPORTATION SYSTEM
J.B. = JUNCTION BOX
L.L.V. = LONG LEG VERTICAL
LMC = LATEX MODIFIED CONCRETE
LT = LEFT
MAX. = MAXIMUM
MIN. = MINIMUM
NB = NORTHBOUND
NO. = NUMBER
N.T.S. = NOT TO SCALE
OH = OVERHEAD
P.C.C. = PORTLAND CEMENT CONCRETE
R = RADIUS
R.F. = REAR FACE
RT = RIGHT
SB = SOUTHBOUND
SCH. = SCHEDULE
SHLD. = SHOULDER
S.S. = STAINLESS STEEL
STA. = STATION
S.W. = SHOP WELD
TRK = TRACK
TYP. = TYPICAL
UG = UNDERGROUND

INDEX OF BRIDGE 1-748S SHEETS

BR. SHEET Nº	BR. DWG. Nº	TABLE OF CONTENTS
31 TO 32	PN-01 TO PN-02	BRIDGE PROJECT NOTES
33	PN-03	SUMMARY OF PROPOSED REPAIR AND RECONSTRUCTION ITEMS
34	PN-04	CONCRETE REPAIR DETAILS
35 TO 36	PE-01 TO PE-02	GENERAL PLAN AND ELEVATION
37 TO 40	TS-01 TO TS-04	BRIDGE TYPICAL SECTIONS
41 TO 43	DM-01 TO DM-03	DEMOLITION DETAILS
44	DM-04	EXISTING BRACKET REMOVAL DETAILS
45 TO 46	FT-01 TO FT-02	FOOTING LAYOUT
47 TO 55	PL-01 TO PL-09	PILE LAYOUT AND DETAILS
56 TO 59	AB-01 TO AB-04	ABUTMENT 40D DETAILS
60	PR-01	PIER 33S PEDESTAL RECONSTRUCTION DETAILS
61 TO 65	PR-02 TO PR-06	PIER CONCRETE REPAIR DETAILS
66 TO 77	PR-07 TO PR-18	PIER DETAILS
78 TO 80	RH-01 TO RH-03	JACKING DETAILS
81 TO 85	BB-01 TO BB-05	BEARING DETAILS
86 TO 87	FR-01 TO FR-02	FRAMING PLAN
88 TO 92	BM-01 TO BM-05	GIRDER DETAILS
93	SD-01	SUPERSTRUCTURE DETAILS
94 TO 100	DK-01 TO DK-07	DECK OVERHANG DETAILS
101 TO 109	DK-08 TO DK-16	DECK SLAB AND PARAPET REINFORCEMENT DETAILS
110	DK-17	DECK JOINT DETAIL ABUMTMENT 40
111 TO 115	PA-01 TO PA-05	PARAPET DETAILS
116 TO 122	FD-01 TO FD-07	FINISHED BRIDGE DECK ELEVATIONS
123 TO 132	EX-01 TO EX-10	EXPANSION JOINT DETAILS
133 TO 134	DT-01 TO DT-02	BRIDGE MOUNTED LIGHT BRACKET DETAILS
135 TO 139	DT-03 TO DT-07	SCUPPER DETAILS
140 TO 143	AS-01 TO AS-04	APPROACH SLAB AND SLEEPER SLAB DETAILS
144 TO 152	BR-01 TO BR-09	REINFORCING BAR LIST
153 TO 154	BO-01 TO BO-02	SOIL BORINGS
		TOTAL BRIDGE SHEETS: 124

QUANTITIES

ITEM Nº	ITEM TITLE	UNIT	QUANTITY
207000	STRUCTURAL EXCAVATION	CY	531
211000	REMOVAL OF STRUCTURES AND OBSTRUCTIONS	LS	1
301001	GRADED AGGREGATE BASE COURSE, TYPE B	CY	31
601503	CLEANING BRIDGE SCUPPER	EACH	20
604000	JACKING BRIDGE	LS	1
604001	PROTECTIVE SHIELD	LS	1
604502	PROTECTION OF EXISTING STRUCTURES	LS	1
605509	MICROPILES	LF	2320
605510	MICROPILES PROOF TEST	EA	6
605021	FURNISH STEEL H-PILES, HP 12 X 53	LF	378
605071	FURNISH STEEL H INDICATOR OR TEST PILES, HP 12 X 53	LF	54
605121	INSTALL STEEL H-PILES, HP 12 X 53	LF	378
605171	INSTALL STEEL H INDICATOR OR TEST PILES, HP 12 X 53	LF	54
605201	DYNAMIC PILE TESTING BY CONTRACTOR	EA	1
610002	PORTLAND CEMENT CONCRETE MASONRY, ABUTMENT ABOVE FOOTING, CLASS A	CY	29
610005	PORTLAND CEMENT CONCRETE MASONRY, SUBSTRUCTURE, CLASS A	CY	6
610008	PORTLAND CEMENT CONCRETE MASONRY, PARAPET, CLASS A	CY	139
610010	PORTLAND CEMENT CONCRETE MASONRY, ABUTMENT FOOTING, CLASS B	CY	29
610012	PORTLAND CEMENT CONCRETE MASONRY, PIER FOOTING, CLASS B	CY	216
610013	PORTLAND CEMENT CONCRETE MASONRY, PIER ABOVE FOOTING, CLASS B	CY	85
610016	PORTLAND CEMENT CONCRETE MASONRY, CLASS D	CY	14
610017	PORTLAND CEMENT CONCRETE MASONRY, SUPERSTRUCTURE, CLASS D	CY	504
610018	PORTLAND CEMENT CONCRETE MASONRY, APPROACH SLAB, CLASS D	CY	38
610019	HIGH EARLY STRENGTH CONCRETE	CY	4
611000	BAR REINFORCEMENT	LB	101427
611001	BAR REINFORCEMENT, EPOXY COATED	LB	135292
613000	EPOXY CONCRETE SEALER	SF	417
613001	SILICONE-BASED ACRYLIC CONCRETE SEALER	SF	13973
615001	STEEL STRUCTURES	LS	1
623004	REPLACE ANCHOR BOLTS	EA	14
623500	BRONZE BEARINGS	EA	44
624000	PREFABRICATED EXPANSION JOINT SYSTEM, 3"	LF	267
625000	LATEX-MODIFIED CONCRETE OVERLAY INSTALLATION	SY-IN	6530
625001	FURNISHING LATEX-MODIFIED CONCRETE OVERLAY	CY	228
625503	ADDITIONAL LATEX-MODIFIED CONCRETE FOR PARTIAL DECK REPAIRS	CY	25
625504	POLYESTER POLYMER CONCRETE SAND MIX FOR RUMBLE STRIPS	CF	45
628041	DEEP SPALL REPAIR	CF	20
628042	REHABILITATION OF P.C.C. MASONRY	CY	2
628053	DECK REPAIR, FULL DEPTH	SF	15
628070	DRILLING HOLES AND INSTALLING DOWELS	EA	184
628502	REMOVAL OF EXISTING DECK REPAIRS	SF	15
760013	PAVEMENT MILLING, PORTLAND CEMENT CONCRETE PAVEMENT	SY-IN	3382
760500	TOTAL SURFACE HYDRODEMOLITION	SY	950
760501	DEEP CUT HYDRODEMOLITION	SY	281

UNOFFICIAL WEBSITE COPY

REPAIR NO.	REPAIR DESCRIPTION	LOCATION	REMARKS	DWG. NO.	ITEM NO.	ITEM DESCRIPTION	UNIT	QTY.	CONTINGENT %	TOTAL QTY.
1	JOINT REPLACEMENT (FULL JOINT SYSTEM REPLACEMENT)	PIERS 26S THROUGH 39S	PARTIAL WIDTH, QTY INCLUDES NEW WIDTH OF JOINTS OVER PIERS 34D-39D	EX-01	610017	PORTLAND CEMENT CONCRETE MASONRY, SUPERSTRUCTURE, CLASS D	CY	45	0	45
				TO	611000	BAR REINFORCEMENT	LB	9957	0	9957
				EX-10	624000	PREFABRICATED EXPANSION JOINT SYSTEMS, 3"	LF	113	0	113
					628070	DRILLING HOLES AND INSTALLING DOWELS	EA	156	0	156
3	MILL EXISTING DECK/OVERLAY	SPANS 26S THROUGH 39S	PARTIAL WIDTH	PN-04,	628053	DECK REPAIR, FULL DEPTH	SF	12	25	15
				DM-01,	628502	REMOVAL OF EXISTING DECK REPAIRS	SF	12	25	15
				DM-02	760013	PAVEMENT MILLING, PORTLAND CEMENT CONCRETE PAVEMENT	SY-IN	3452	0	3452
4	HYDRODEMOLITION OF EXISTING DECK SURFACE	SPANS 26S THROUGH 39S	PARTIAL WIDTH	DM-01	760500	TOTAL SURFACE HYDRODEMOLITION	SY	950	0	950
				TO	760501	DEEP CUT HYDRODEMOLITION	SY	347	0	347
				DM-03						
5	FURNISH AND INSTALL LMC OVERLAY	SPANS 26S THROUGH 39S	PARTIAL WIDTH	PN-04	625000	LATEX-MODIFIED CONCRETE OVERLAY INSTALLATION	SY-IN	6530	0	6530
					625001	FURNISHING LATEX-MODIFIED CONCRETE OVERLAY	CY	182	25	228
					625503	ADDITIONAL LATEX-MODIFIED CONCRETE FOR PARTIAL DECK REPAIRS	CY	20	25	25
6	REPAIR SPALL/DELAMINATION IN SOFFIT	SPAN 30S	2 SPALLS BETWEEN GIRDERS S-7 AND S-8 SEE CONCRETE SOFFIT REPAIR TABLE BELOW	PN-04	628041	DEEP SPALL REPAIR	CF	2	25	3
8	WIDEN SPANS 33S-39S	SPANS 33S, 34S, 35S, 36S, 37S, 38S, AND 39S		FT-01,	207000	STRUCTURAL EXCAVATION	CY	531	0	531
				FT-02,	211000	REMOVAL OF STRUCTURES AND OBSTRUCTIONS	LS	1	0	1
				PL-01	604001	PROTECTIVE SHIELD	LS	1	0	1
				TO 09,	605021	FURNISH STEEL H-PILES, HP 12 X 53	LF	378	0	378
				AB-01	605071	FURNISH STEEL H INDICATOR OR TEST PILES, HP 12 X 53	LF	54	0	54
				TO 04,	605121	INSTALL STEEL H-PILES, HP 12 X 53	LF	378	0	378
				PR-01,	605171	INSTALL STEEL H INDICATOR OR TEST PILES, HP 12 X 53	LF	54	0	54
				PR-07	605201	DYNAMIC PILE TESTING BY CONTRACTOR	EA	1	0	1
				TO 18	605509	MICROPILES	LF	2210	0	2210
				BB-01	605510	MICROPILE PROOF TEST	EA	6	0	6
				TO 04,	610002	PORTLAND CEMENT CONCRETE MASONRY, ABUTMENT ABOVE FOOTING, CLASS A	CY	29	0	29
				FR-01,						
				FR-02,	610005	PORTLAND CEMENT CONCRETE MASONRY, SUBSTRUCTURE, CLASS A	CY	7	0	7
				BM-01	610008	PORTLAND CEMENT CONCRETE MASONRY, PARAPET, CLASS A	CY	57	0	57
				TO 05,	610010	PORTLAND CEMENT CONCRETE MASONRY, ABUTMENT FOOTING, CLASS B	CY	29	0	29
				DK-08	610012	PORTLAND CEMENT CONCRETE MASONRY, PIER FOOTING, CLASS B	CY	201	0	201
				TO 16,	610013	PORTLAND CEMENT CONCRETE MASONRY, PIER ABOVE FOOTING, CLASS B	CY	94	0	94
				AS-01	610016	PORTLAND CEMENT CONCRETE MASONRY, CLASS D	CY	14	0	14
				TO 04	610017	PORTLAND CEMENT CONCRETE MASONRY, SUPERSTRUCTURE, CLASS D	CY	236	0	236
					610018	PORTLAND CEMENT CONCRETE MASONRY, APPROACH SLAB, CLASS D	CY	38	0	38
					611000	BAR REINFORCEMENT	LB	75260	0	75260
					611001	BAR REINFORCMENT, EPOXY COATED	LB	69600	0	69600
					613000	EPOXY CONCRETE SEALER	SF	434	0	434
					613001	SILICONE-BASED ACRYLIC CONCRETE SEALER	SF	275267	0	275267
					615001	STEEL STRUCTURES	LS	1	0	1
					623500	BRONZE BEARINGS	EA	17	0	17
					624000	PREFABRICATED EXPANSION JOINT SYSTEMS, 3"	LF	154	0	154
					628070	DRILLING HOLES AND INSTALLING DOWELS	EA	28	0	28
10	CLEAN SCUPPER AND DOWNSPOUT	SPANS 28S, 29S (2), 30S, 32S (2), 33S, 34S, 36S, 38S	SEE NOTES, THIS SHEET		601503	CLEANING BRIDGE SCUPPER	EA	10	100	20
12	REPLACE BRIDGE SCUPPER / ADD NEW BRIDGE SCUPPER	SPANS 27S, 28S, 29S (2), 30S, 31S, 32S (2), 35S (NEW), 37S (NEW), 39S (NEW)	11 SCUPPERS (8 REPLACE, 3 NEW)	DT-03	610019	HIGH EARLY STRENGTH CONCRETE	CY	4	0	4
				TO	611000	BAR REINFORCEMENT	LB		0	0
				DT-05	615001	STEEL STRUCTURES	LS	1	0	1
13	REPLACE SCUPPER DOWNSPOUT / ADD NEW DOWNSPOUT	P26S C1; P28S C1; P29S C1; P30S C1; P31S C1; P33S C1; P34S C2; P35S C2; P36S C2 (NEW); P37S C2; P38S C2 (NEW); P39S C2; P40S C2 (NEW)	13 LOCATIONS (10 REPLACE, 3 NEW) INCLUDES NEW CLEAN-OUT AT BASE OF COLUMN SEE HIGHWAY DWG. DT-06 FOR CLEAN-OUT DET.	DT-06 & DT-07	615001	STEEL STRUCTURES	LS	1	0	1
14	REMOVE AND REPLACE BRIDGE PARAPET	WEST PARAPET SPANS 26S, 27S, 28S, 29S, 30S, 31S, AND 32S	INCLUDES REMOVING AND REPLACING A PORTION OF THE DECK AND OVERHANG	DM-01,	211000	REMOVAL OF STRUCTURES AND OBSTRUCTIONS	LS	1	0	1
				DM-02,	604001	PROTECTIVE SHIELD	LS	1	0	1
				TS-01,	610008	PORTLAND CEMENT CONCRETE MASONRY, PARAPET, CLASS A	CY	73	0	73
				DK-01	610017	PORTLAND CEMENT CONCRETE MASONRY, SUPERSTRUCTURE, CLASS D	CY	153	0	153
				TO 07,	611000	BAR REINFORCEMENT	LB	16262	0	16262
				PA-01	611001	BAR REINFORCEMENT, EPOXY COATED	LB	25370	0	25370
				TO 04	613001	SILICONE-BASED ACRYLIC CONCRETE SEALER	SF	5233	0	5233
19	REPLACE BRIDGE LIGHTING	SEE LIGHTING PLANS FOR COMPLETE LIST OF LOCATIONS, ITEMS, AND PAYMENT								
24	JACK AND REPLACE EXISTING BRIDGE BEARINGS	SPAN 33S, PIER 34S; SPAN 34S, PIER 35S; SPAN 35S, PIER 35S; SPAN 37S, PIER 37S; SPAN 38S, PIER 39S, BEARING 6; SPAN 39S, PIER 39S, BEARINGS 1 & 6	27 BEARING REPLACEMENTS	RH-01	604000	JACKING BRIDGE	LS	1	0	1
				TO						
				RH-04,						
				BB-01	623500	BRONZE BEARINGS	EA	27	0	27
				TO						
				BB-04						
28	REMOVE STEEL SIGN SUPPORT BRACKETS	SPAN 28S AT BEAM S-7, SPAN 36S AT BEAM S-6		DM-04	211000	REMOVAL OF STRUCTURES AND OBSTRUCTIONS	LS	1	0	1
37	REPAIR DEEP SPALLS IN CONCRETE SUBSTRUCTURE	PIERS 34S, 35S, 37S, 56S, 58S		PR-02	628041	DEEP SPALL REPAIR	CF	16	25	20
				TO 06						
47	FILL RUMBLE STRIPS	PIER 23 TO PIER 51S	LEFT SHOULDER	PN-04	625504	POLYESTER POLYMER CONCRETE SAND MIX FOR RUMBLE STRIPS	CF	36	25	45

UNOFFICIAL WEBSITE COPY

LMC OVERLAY NOTES:

1. NO LONGITUDINAL CONSTRUCTION JOINTS SHALL BE PLACED IN THE LMC OVERLAY. OVERLAY SHALL BE POURED FULL WIDTH WITHIN LIMITS OF WORK AS SHOWN ON DWGS. TS-01 TO TS-04.

CLEAN SCUPPER AND DOWNSPOUT NOTES:

1. PRIOR TO IMPLEMENTING STAGE I LANE CLOSURES, THE CONTRACTOR SHALL CLEAN THE EXISTING BRIDGE SCUPPERS ON I-95 SB WITHIN THE LIMITS OF THE WORK ON THE BRIDGE AND AS DIRECTED BY THE ENGINEER. IN ADDITION, AFTER STAGE 2 CONSTRUCTION IS COMPLETE, ALL BRIDGE SCUPPERS SHALL BE CLEANED AS NECESSARY AND BE CLEAR OF DEBRIS PRIOR TO COMPLETION OF THE CONTRACT. ALL WORK SHALL BE PERFORMED IN ACCORDANCE WITH THESE PLANS AND ITEM 601503 - CLEANING BRIDGE SCUPPERS.

2. PRIOR TO BEGINNING WORK, THE CONTRACTOR SHALL SUBMIT FOR APPROVAL THE SOURCE OF THE WATER TO BE USED TO CLEAN THE BRIDGE SCUPPERS. ONLY WATER THAT IS SAFE FOR DOWNSTREAM ENVIRONMENTS SHALL BE USED.

CONCRETE SOFFIT REPAIR NOTES:

1. THE LOCATION AND QUANTITIES OF THE REPAIRS SHOWN ON THIS DRAWING ARE BASED ON INSPECTION FIELD NOTES (SEE NOTE 13 ON DWG. PN-01). PRIOR TO STARTING EACH REPAIR, THE LIMITS SHALL BE VERIFIED BY THE CONTRACTOR IN THE PRESENCE OF THE ENGINEER.

CONCRETE SOFFIT REPAIR TABLE

LOCATION	DEEP SPALL REPAIR SIZE
SPAN 30S, BETWEEN GIRDERS S-7 & S-8	14"± x 24"±
SPAN 30S, BETWEEN GIRDERS S-7 & S-8	6"± x 6"±

ADDENDA / REVISIONS

NOT TO SCALE

REHABILITATION OF I-95, 2ND STREET ON-RAMP IMPROVEMENTS

CONTRACT T201907402 | COUNTY NEW CASTLE | BRIDGE NO. 1 748S 059 | DESIGNED BY: D. NIZAMOFF | CHECKED BY: W. GESCHREI

SUMMARY OF PROPOSED REPAIR AND RECONSTRUCTION ITEMS

PN-03 | SECTION WRA | SHEET NO. 33

N:\31987-004\Contract_Ramp_D\CADD\Bridge\BR1-748S_PN03.dgn 8/23/2019 4:30:16 PM

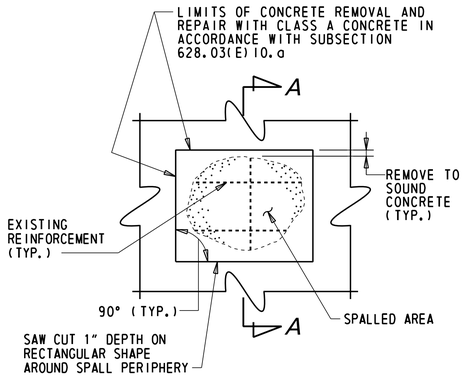

PLAN

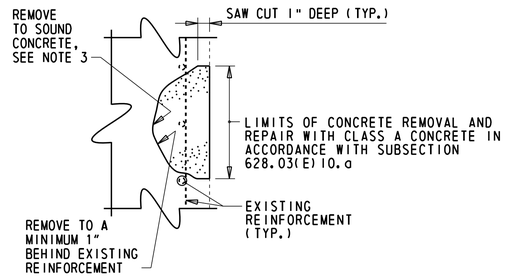

SECTION A-A

DEEP SPALL REPAIR (ITEM 628041)

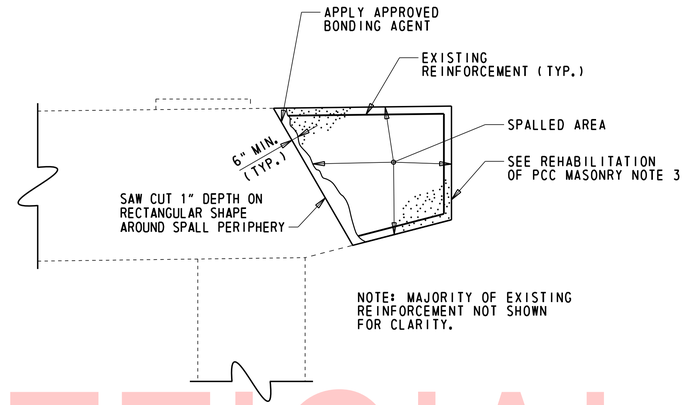

REHABILITATION OF PCC MASONRY (ITEM 628042)

DEEP SPALL REPAIR NOTES

1. DEEP SPALL REPAIRS ARE DEFINED AS PATCHES THAT EXTEND BELOW THE TOP MAT OF REINFORCEMENT. DELAMINATED CONCRETE HAS BEEN ASSUMED AS DEEP SPALL REPAIRS.
2. ALL WORK INVOLVING METHODS OF CONCRETE REMOVAL; CLEANING OF CONCRETE SURFACE AND EXISTING REINFORCEMENT; REPAIRING OR REPLACING DAMAGED REINFORCEMENT AS RESULT OF CONSTRUCTION ACTIVITIES OR SECTION LOSS; PRESENCE OF CONTRACTION OR EXPANSION JOINTS; SURFACE PREPARATION; AND CONCRETE PLACEMENT SHALL BE PERFORMED IN ACCORDANCE WITH SUBSECTION 628.03(E) OF THE STANDARD SPECIFICATIONS. PAYMENT INCIDENTAL TO ITEM 628041 - DEEP SPALL REPAIR.
3. IF DEPTH OF REPAIR EXTENDS MORE THAN 6" BEYOND SURFACE OF CONCRETE, CONTRACTOR SHALL STOP WORK AND NOTIFY THE ENGINEER IMMEDIATELY.

REHABILITATION OF PCC MASONRY NOTES

1. REHABILITATION OF PCC MASONRY IS DEFINED AS DEEP SPALL PATCHES THAT EXCEED THE 0.5 C.Y. THRESHOLD IN A SINGLE AREA.
2. ALL WORK INVOLVING METHODS OF CONCRETE REMOVAL; CLEANING OF CONCRETE SURFACE AND EXISTING REINFORCEMENT; REPAIRING OR REPLACING DAMAGED REINFORCEMENT AS RESULT OF CONSTRUCTION ACTIVITIES OR SECTION LOSS; PRESENCE OF CONTRACTION OR EXPANSION JOINTS; SURFACE PREPARATION; AND CONCRETE PLACEMENT SHALL BE PERFORMED IN ACCORDANCE WITH SUBSECTION 628.03(E) OF THE STANDARD SPECIFICATIONS. PAYMENT INCIDENTAL TO ITEM 628042 - REHABILITATION OF PCC MASONRY.
3. DETAIL SHOWN FOR "REHABILITATION OF EXISTING PCC MASONRY" UTILIZES A GENERIC EXAMPLE USING PARTIAL RECONSTRUCTION OF AN EXISTING PIER CAP. SEE ABUTMENT AND PIER REHABILITATION SHEETS FOR SIZE AND LOCATION OF REPAIRS AT EACH SUBSTRUCTURE UNIT.
4. IF DEPTH OF REPAIR EXTENDS MORE THAN 6" BEYOND SURFACE OF CONCRETE, CONTRACTOR SHALL STOP WORK AND NOTIFY THE ENGINEER IMMEDIATELY.

REMOVAL OF EXISTING DECK REPAIR NOTES

1. AFTER EXISTING OVERLAY IS REMOVED, PRIOR TO HYDRODEMOLITION, ANY EXISTING DECK REPAIRS THAT ARE LOOSE, PARTIALLY DELAMINATED, OR OTHERWISE UNSOUND, WILL BE MEASURED BY THE ENGINEER AND MARKED FOR REMOVAL.
2. THE CONTRACTOR SHALL REMOVE THE EXISTING DECK REPAIRS IN ACCORDANCE WITH SECTION 628.03(F).
3. THE REMOVAL SHALL NOT INCLUDE ANY UNSOUND ORIGINAL BRIDGE DECK CONCRETE.
4. REFER TO ITEM 628502 - REMOVAL OF EXISTING DECK REPAIR FOR PAYMENT AND ADDITIONAL INFORMATION.
5. IF REMOVAL OF EXISTING DECK REPAIR REACHES FULL DEPTH, AND WITH THE APPROVAL OF THE ENGINEER, REPAIR AREA SHALL BE REPAIRED IN ACCORDANCE WITH SUBSECTION 628.03(F) AND PAID FOR UNDER ITEM 628053 - DECK REPAIR, FULL DEPTH. REMOVAL OF EXISTING DECK REPAIRS THAT ARE CHANGED TO DECK REPAIR, FULL DEPTH WILL ONLY BE PAID FOR ONCE UNDER ITEM 628053.

DECK REPAIR NOTES

1. AFTER EXISTING OVERLAY IS REMOVED, PRIOR TO HYDRODEMOLITION, EXISTING AREAS OF DECK REQUIRING FULL DEPTH REPAIR AS DIRECTED BY THE ENGINEER, SHALL BE REPAIRED USING DETAIL SHOWN ON THIS SHEET.
2. ALL WORK INVOLVING METHODS OF CONCRETE REMOVAL; CLEANING OF CONCRETE SURFACE AND EXISTING REINFORCEMENT; REPAIRING OR REPLACING DAMAGED REINFORCEMENT AS RESULT OF CONSTRUCTION ACTIVITIES OR SECTION LOSS; PRESENCE OF CONTRACTION OR EXPANSION JOINTS; SURFACE PREPARATION; AND CONCRETE PLACEMENT SHALL BE PERFORMED IN ACCORDANCE WITH SUBSECTION 628.03(F) OF THE STANDARD SPECIFICATIONS AND ITEMS 760500 - TOTAL SURFACE HYDRODEMOLITION, ITEM 760501 - DEEP CUT HYDRODEMOLITION, AND ITEM 625500 - ADDITIONAL LATEX-MODIFIED CONCRETE FOR PARTIAL DECK REPAIRS. PAYMENT FOR FULL DEPTH DECK REPAIRS MADE AFTER MILLING AND PRIOR TO HYDRODEMOLITION WILL BE MADE UNDER ITEM 628053 - DECK REPAIR, FULL DEPTH. PAYMENT FOR FULL DEPTH DECK REPAIRS MADE AFTER HYDRODEMOLITION WILL BE MADE UNDER ITEM 628053 - DECK REPAIR, FULL DEPTH.
3. MILLING, HYDRODEMOLITION, AND LMC OVERLAY WILL BE PAID FOR UNDER THEIR RESPECTIVE ITEMS.

PPC SAND MIX FOR RUMBLE STRIPS NOTES

1. PRIOR TO SHIFTING TRAFFIC TO A CONFIGURATION WHERE TRAFFIC WILL BE RIDING ON EXISTING BRIDGE DECK RUMBLE STRIPS, ALL EXISTING RUMBLE STRIPS ON THE BRIDGE DECK WITHIN THE LIMITS OF WORK SHALL BE FILLED WITH PPC SAND MIX IN ACCORDANCE WITH THE DETAIL ON THIS SHEET AND ITEM 625504 - POLYESTER POLYMER CONCRETE SAND MIX FOR RUMBLE STRIPS.

LEGEND:

- SPALLED CONCRETE
- LIMITS OF REMOVAL, PAVEMENT MILLING (ITEM 760013)
- LIMITS OF HYDRODEMOLITION (ITEM 760500 OR 760501)
- LIMITS OF REMOVAL (ITEM 628053 OR 628502)
- CLASS D CONCRETE
- PPC SAND MIX FOR RUMBLE STRIPS (ITEM 625504)

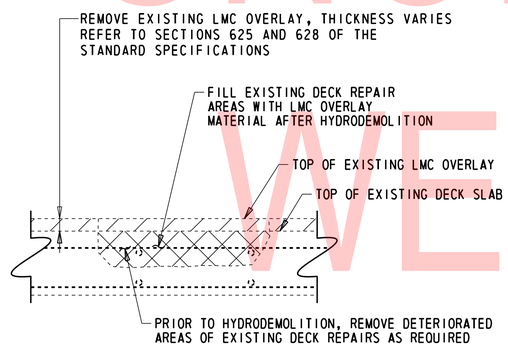

REMOVAL OF EXISTING DECK REPAIRS (ITEM 628502)

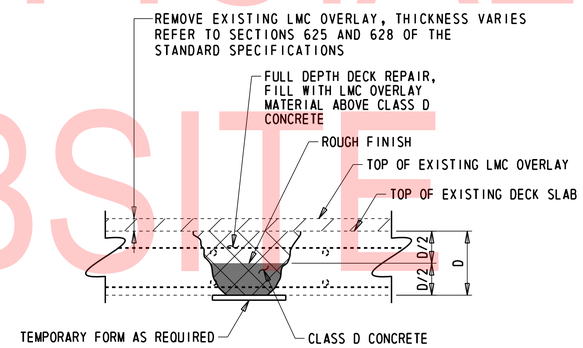

DECK REPAIR, FULL DEPTH (ITEM 628053)

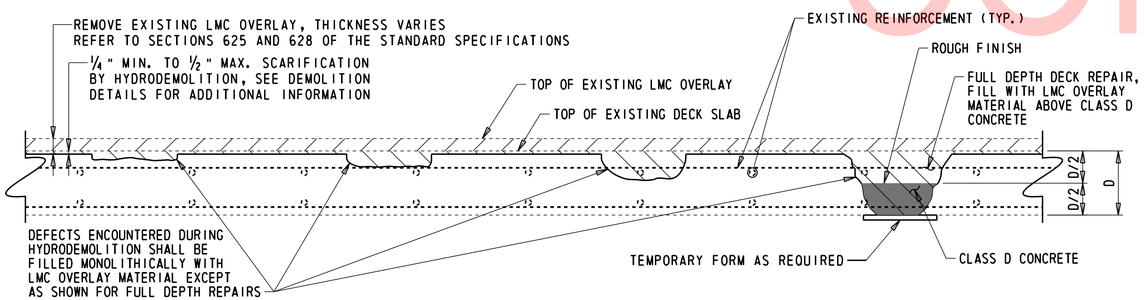

HYDRODEMOLITION AND DECK REPAIR (WITH OVERLAY)

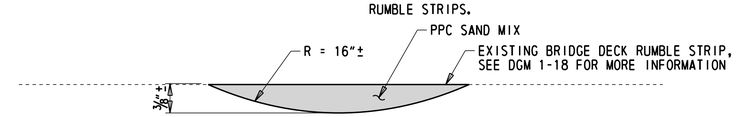

PPC SAND MIX FOR RUMBLE STRIPS DETAIL

UNOFFICIAL WEBSITE COPY

ADDENDA / REVISIONS		NOT TO SCALE	REHABILITATION OF I-95, 2ND STREET ON-RAMP IMPROVEMENTS	CONTRACT T201907402	BRIDGE NO. 1 748S 059	CONCRETE REPAIR DETAILS	PN-04 SECTION WRA
				COUNTY NEW CASTLE	DESIGNED BY: D. NIZAMOFF		SHEET NO. 34
					CHECKED BY: W. GESCHREI		

N:\31987_00A\Contract_Ramp_D\CADD\Bridge\BR1-748S_PN04.dgn
8/23/2019 4:30:17 PM

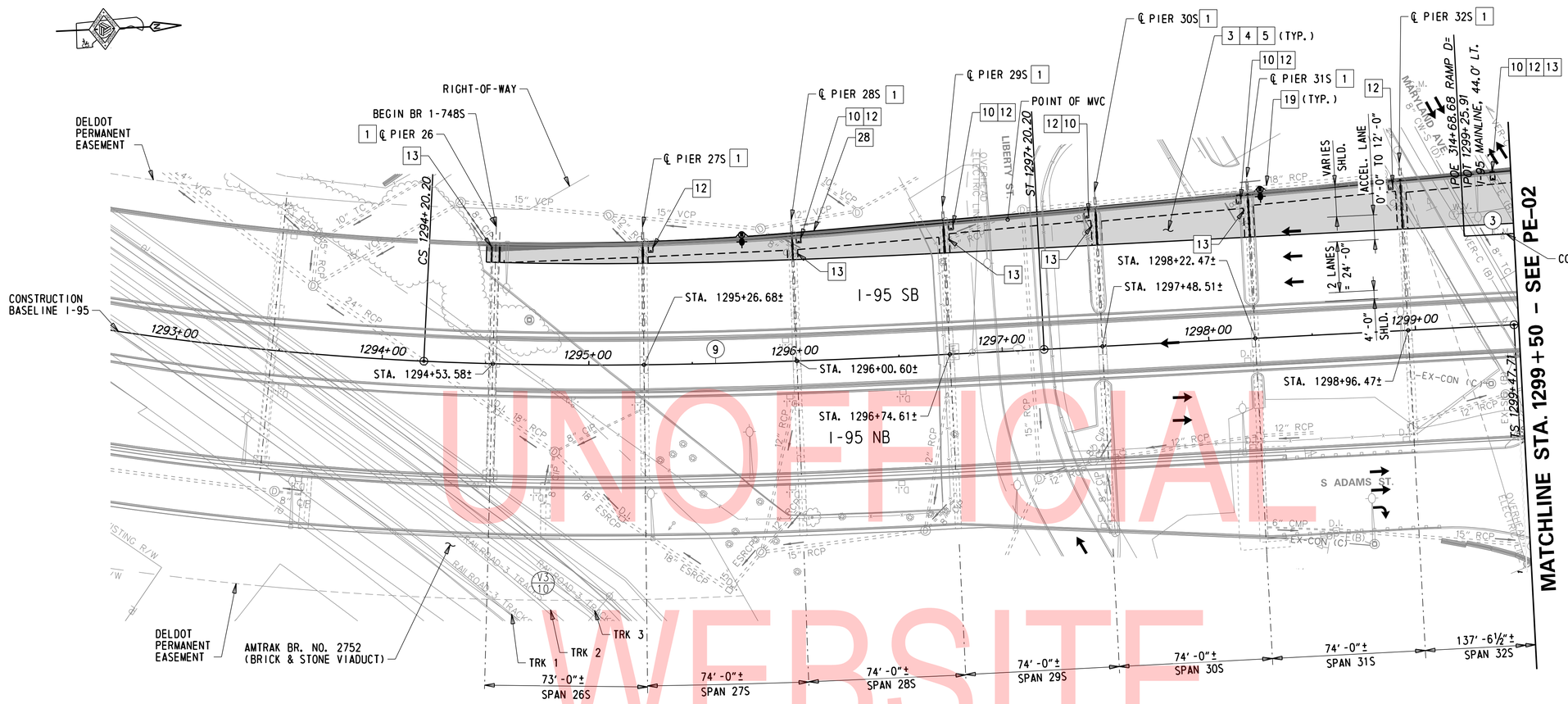

PLAN

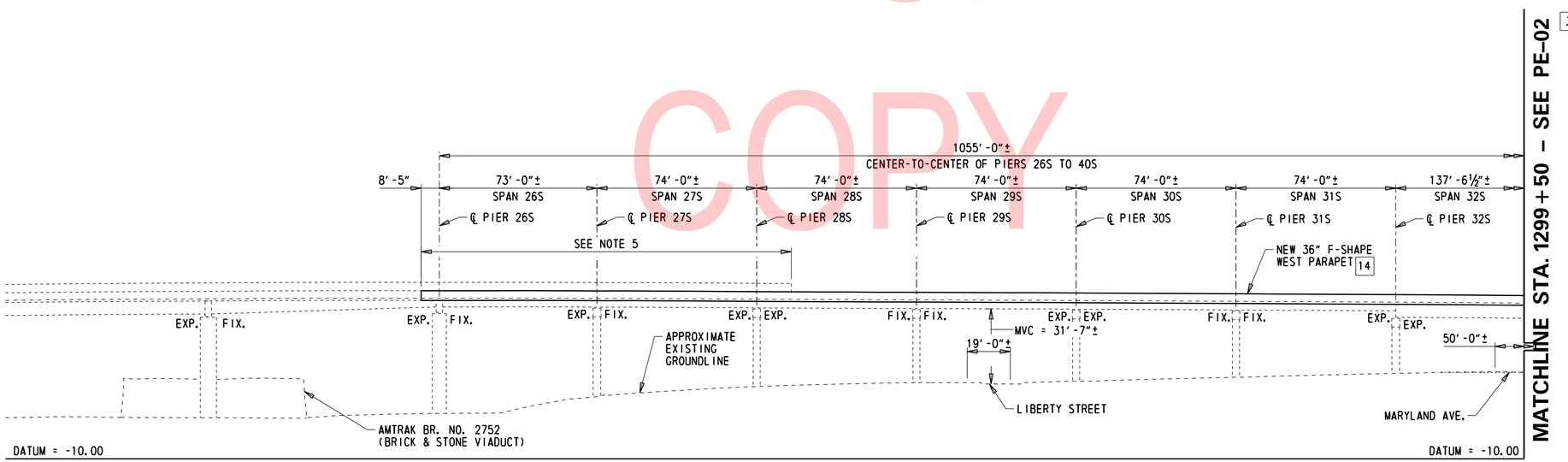

DEVELOPED SECTION ALONG BASELINE I-95

NOTES:

1. DIMENSIONS SHOWN ARE MEASURED ALONG CONSTRUCTION BASELINE I-95.
2. MINIMUM VERTICAL CLEARANCE (MVC) IS BASED ON 2013 NBIS INSPECTION REPORT.
3. SIGNING NOT SHOWN FOR CLARITY. SEE SIGNING PLAN ON DWGS. SS-02 AND SS-03 FOR DETAILS.
4. CONSTRUCTION STAGING LIMITS NOT SHOWN FOR CLARITY. SEE DWGS. DM-01 AND DM-02 AND THE CONSTRUCTION PHASING AND M.O.T. PLAN ON DWGS. CS-01 TO CS-301.
5. EXISTING SOUTHBOUND DECORATIVE BARRIER TO BE REMOVED WITHIN LIMITS OF CONTRACT T201907402 (SPANS 26S TO 28S). SEE DWG. EX-06 FOR LIMITS OF REMOVAL. NEW DECORATIVE BARRIER IN THESE SPANS TO BE INSTALLED IN LATER CONTRACT T201407404 BY OTHERS.
6. SEE DWGS. CP-01 TO CP-03 FOR DISPOSITION OF EXISTING DRAINAGE PIPES.

KEY:

- 1 REPAIR NUMBER AS SHOWN ON DWG. PN-03
- 9 CURVE DATA
- V3/10 AMTRAK VALUATION SECTION & SHEET NUMBER
- PROPOSED BRIDGE MOUNTED LIGHT POLE

LEGEND:

- 3 4 5 — MILL EXISTING OVERLAY, HYDRODEMOLITION EXISTING DECK SURFACE, AND FURNISH AND INSTALL NEW LMC OVERLAY
- 14 — REMOVE AND RECONSTRUCT PARAPET AND PORTION OF DECK

HORIZONTAL CURVE DATA

CURVE 3

P.I. STA. 312+44.7880
DELTA = 5°43'46.4806" L
Dc = 2°18'37.1293"
R = 2480'
T = 124.1034'
L = 248.0000'
E = 3.1032
P.C. STA. = 311+20.6846
P.T. STA. = 313+68.6846

CURVE 9

SCS P.I. STA. 1295+20.2966
Ls = 300'
P = 2.4991'
K = 149.95'
Xc = 299.7001'
Yc = 9.9929'
LT = 200.1049'
ST = 100.0953'
LC = 299.8667'

NOTE: SEE DWG. PE-06 FOR CURVE 10

NOTE:

UTILITIES AND DRAINAGE FEATURES NOT SHOWN FOR CLARITY.

UNOFFICIAL WEBSITE COPY

ADDENDA / REVISIONS	SCALE 0 30 60 90 FEET	REHABILITATION OF I-95, 2ND STREET ON-RAMP IMPROVEMENTS	CONTRACT T201907402	BRIDGE NO. 1 748S 059	GENERAL PLAN AND ELEVATION 1 OF 2	PE-01
			COUNTY NEW CASTLE	DESIGNED BY: D. NIZAMOFF		SECTION WRA
				CHECKED BY: W. GESCHREI		SHEET NO. 35

N:\31987-004\Contract_Ramp_D\CADD\Bridge\BR1-748S_PE01.dgn
8/29/2019 11:18:40 AM

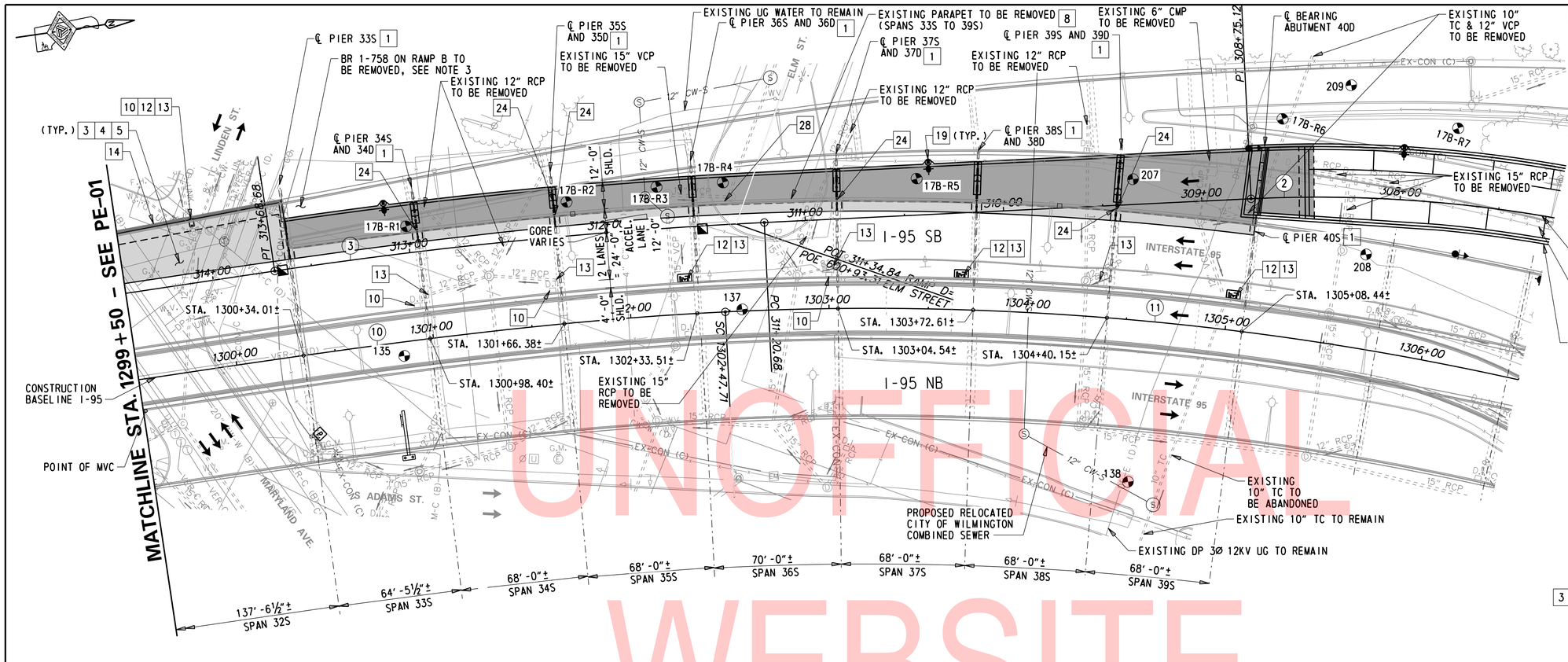

PLAN

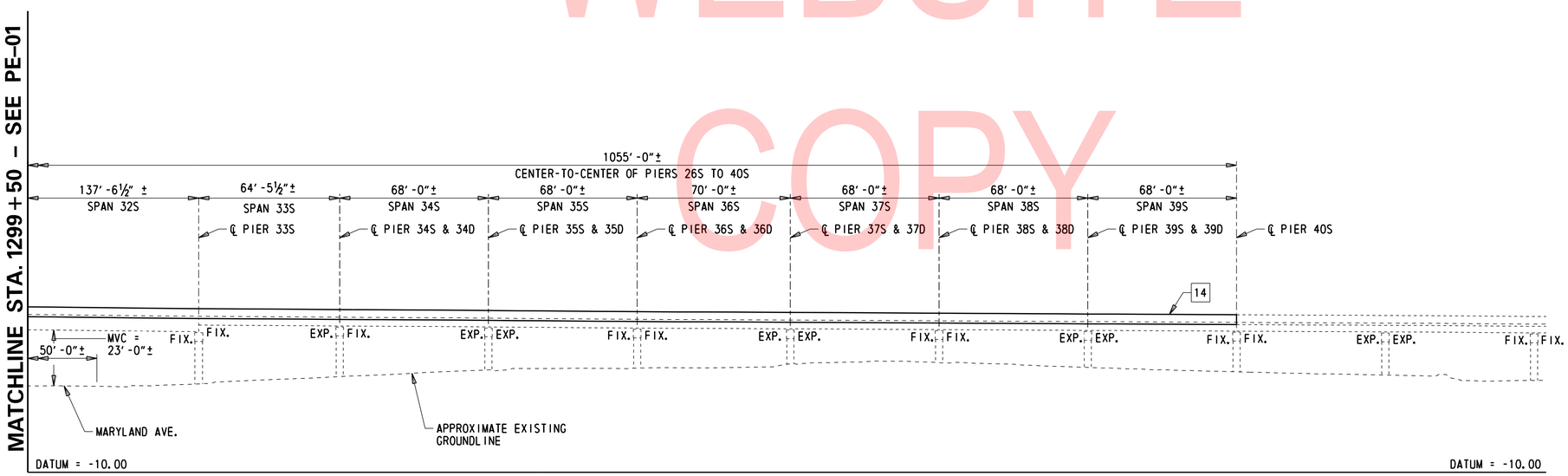

DEVELOPED SECTION ALONG BASELINE I-95

NOTES:

1. DIMENSIONS SHOWN ARE MEASURED ALONG CONSTRUCTION BASELINE I-95.
2. MINIMUM VERTICAL CLEARANCE (MVC) IS BASED ON 2013 NBIS INSPECTION REPORT.
3. SEE BR 1-758 DWGS. DM-01 TO DM-03 FOR REMOVAL OF BR 1-758 LIMITS AND DETAILS.
4. SIGNING NOT SHOWN FOR CLARITY, SEE SIGNING PLAN ON DWGS. SS-02 AND SS-03 FOR DETAILS.
5. CONSTRUCTION STAGING LIMITS NOT SHOWN FOR CLARITY. SEE DWGS. DM-01 AND DM-02 AND THE CONSTRUCTION PHASING AND M.O.T. PLAN ON DWGS. CS-01 TO CS-301.
6. SEE DWGS. CP-01 TO CP-03 FOR DISPOSITION OF EXISTING DRAINAGE PIPES.

KEY:

- 1 REPAIR NUMBER AS SHOWN ON DWG. PN-03
- (3) CURVE DATA
- PROPOSED BRIDGE MOUNTED LIGHT POLE
- PROPOSED UNDER BRIDGE LIGHT FIXTURE
- BORING LOCATION

LEGEND:

- 3 4 5 — MILL EXISTING OVERLAY, HYDRODEMOLITION EXISTING DECK SURFACE, AND FURNISH AND INSTALL NEW LMC OVERLAY
- 14 — REMOVE AND RECONSTRUCT PARAPET AND PORTION OF DECK
- 8 — WIDEN SPANS 33S TO 39S FOR NEW RAMP D ACCELERATION LANE

HORIZONTAL CURVE DATA

CURVE (2)

P.I. STA. 307+43.2982
DELTA = 22°16'20.4372" L
Dc = 8°20'23.9893"
R = 687'
T = 135.2345'
L = 267.0546'
E = 13.1838
P.C. STA. = 306+08.0637
P.T. STA. = 308+75.1183

CURVE (3)

P.I. STA. 312+44.7880
DELTA = 5°43'46.4806" L
Dc = 2°18'37.1293"
R = 2480'
T = 124.1034'
L = 248.0000'
E = 3.1032
P.C. STA. = 311+20.6846
P.T. STA. = 313+68.6846

CURVE (10)

SCS P.I. STA. 1301+47.8159
Ls = 300'
P = 2.4991'
K = 149.95'
Xc = 299.7001'
Yc = 9.9929'
LT = 200.1049'
ST = 100.0953'
LC = 299.8667'

CURVE (11)

P.I. STA. 1304+66.04
DELTA = 16°33'44.7653" L
Dc = 3°49'10.9871"
R = 1500'
T = 218.32'
L = 433.60'
E = 15.81
P.C. STA. = 1302+47.71
P.T. STA. = 1306+81.31

UNOFFICIAL WEBSITE COPY

ADDENDA / REVISIONS	SCALE 0 30 60 90 FEET	REHABILITATION OF I-95, 2ND STREET ON-RAMP IMPROVEMENTS	CONTRACT T201907402	BRIDGE NO. 1 748S 059	GENERAL PLAN AND ELEVATION 2 OF 2	PE-02
			COUNTY NEW CASTLE	DESIGNED BY: D. NIZAMOFF		SECTION WRA
				CHECKED BY: W. GESCHREI		SHEET NO. 36

N:\31987-004\Contract_Ramp_D\CADD\Bridge\BR1-748S_PE02.dgn 8/29/2019 11:19:11 AM

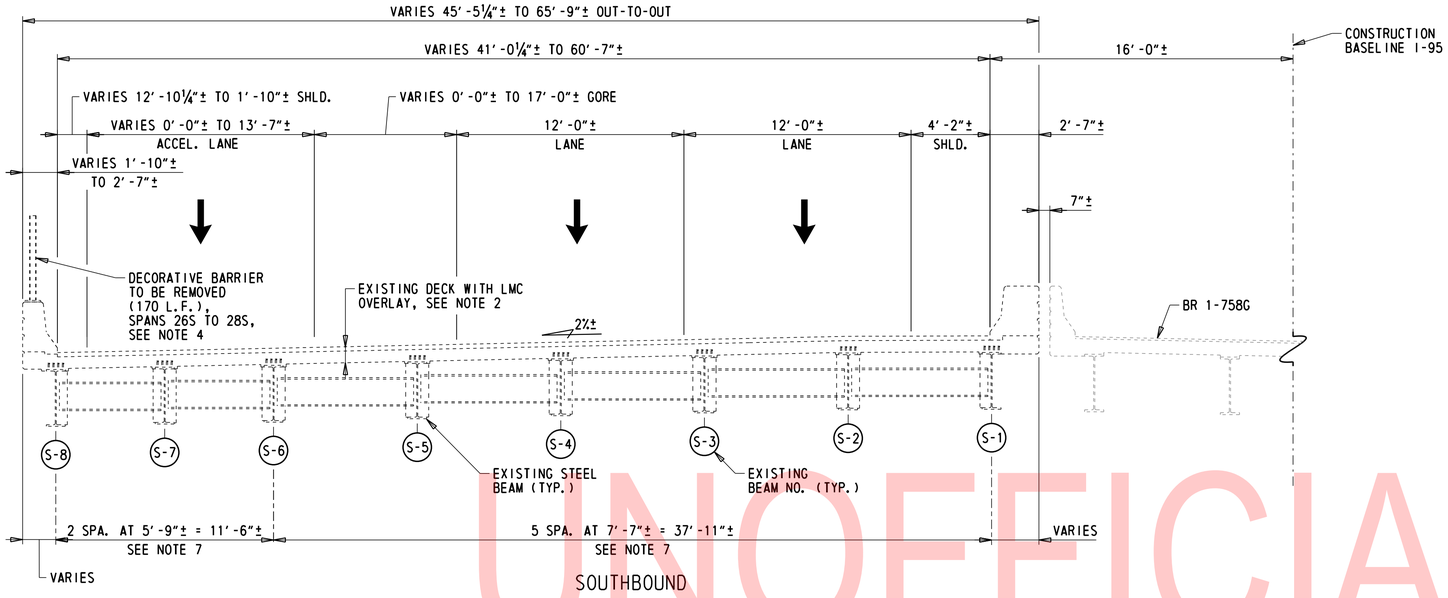

EXISTING TYPICAL SECTION SPANS 26S TO 32S

(STA. 1294+53.58 TO STA. 1300+34.01)

¼" = 1'-0"

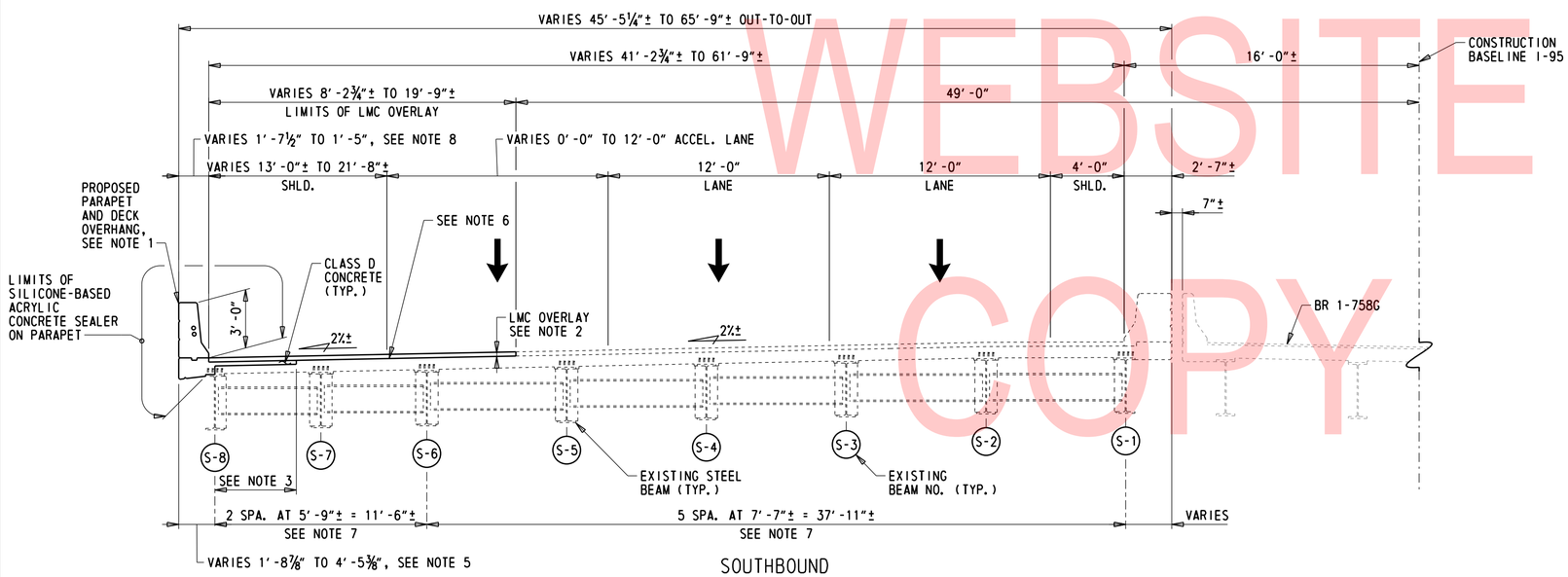

PROPOSED TYPICAL SECTION SPANS 26S TO 32S

(STA. 1294+53.58 TO STA. 1300+34.01)

¼" = 1'-0"

UNOFFICIAL WEBSITE COPY

NOTES:

1. FOR PARAPET DETAIL, DRIP NOTCH DETAIL, AND ARCHITECTURAL GROOVE DETAIL, SEE DWG. PA-01.
2. THICKNESSES OF EXISTING DECK AND PROPOSED LMC OVERLAYS VARY, SEE DWGS. DM-01 AND DM-03 FOR DETAILS.
3. FOR LOCATION OF DECK OVERHANG RECONSTRUCTION LIMITS SEE DWG. DM-01.
4. SEE DWGS. EX-08 AND EX-09 FOR LIMITS OF REMOVAL OF DECORATIVE BARRIER. LIMITS OF REMOVAL INCLUDES APPROXIMATELY 10 L.F. OF DECORATIVE BARRIER REMOVAL IN SPAN 25S.
5. THE PROPOSED EDGE OF DECK DOES NOT FOLLOW THE EXISTING EDGE OF DECK. FOR LAYOUT, SEE DWG. PA-03.
6. THE TOP SURFACE OF THE CLASS D CONCRETE DECK SHALL BE ROUGH FINISHED TO ALL FULL AMPLITUDE OF ¼". THE CONCRETE SHALL BE SCRUBBED TRANSVERSELY WITH A COARSE WIRE BRUSH TO REMOVE ALL LAITANCE AND TO PRODUCE A ROUGHENED SURFACE FOR BONDING WITH THE LMC OVERLAY.
7. GIRDER SPACING FOR EXISTING IS TAKEN AT STA. 1297+48. SEE CONTRACT NO. 64-03-004 FOR ADDITIONAL GIRDER SPACING INFORMATION. SECTION TAKEN WITHIN TANGENT PORTION OF I-95.
8. FOR PARAPET WIDTH BY SPAN, SEE DWG. PA-03.

ADDENDA / REVISIONS	SCALE AS NOTED	REHABILITATION OF I-95, 2ND STREET ON-RAMP IMPROVEMENTS	CONTRACT T201907402	BRIDGE NO. 1 748S 059	BRIDGE TYPICAL SECTION STA. 1294+53 TO 1300+34	TS-01 SECTION WRA
			COUNTY NEW CASTLE	DESIGNED BY: D. NIZAMOFF		SHEET NO. 37
				CHECKED BY: W. GESCHREI		

N:\31987-004\Contract_Ramp_D\CADD\Bridge\BRI-748S_TS01.dgn 8/23/2019 4:30:22 PM

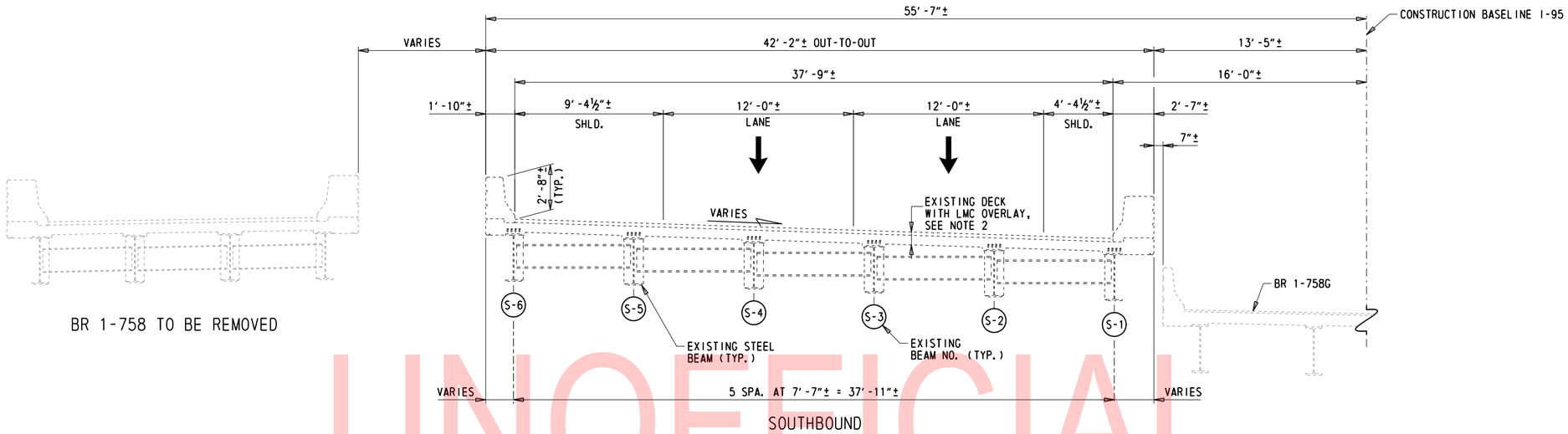

EXISTING TYPICAL SECTION SPANS 33S TO 37S

(STA. 1300+34.01 TO 1303+72.61 I-95 SB)

¼" = 1'-0"

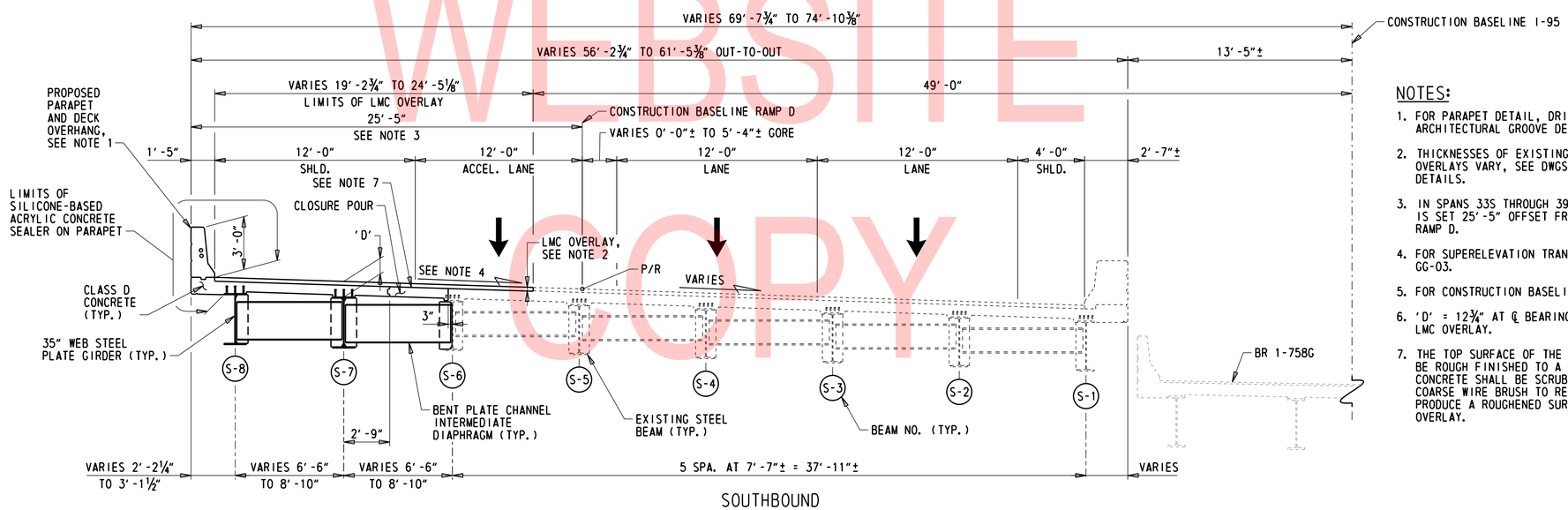

PROPOSED TYPICAL SECTION SPANS 33S TO 37S

(STA. 1300+34.01 TO 1303+72.61 I-95 SB)

¼" = 1'-0"

NOTES:

1. FOR PARAPET DETAIL, DRIP NOTCH DETAIL, AND ARCHITECTURAL GROOVE DETAIL, SEE DWG. PA-01.
2. THICKNESSES OF EXISTING DECK AND PROPOSED LMC OVERLAYS VARY, SEE DWGS. DM-02 AND DM-03 FOR DETAILS.
3. IN SPANS 33S THROUGH 39S THE NEW WEST EDGE OF DECK IS SET 25'-5" OFFSET FROM THE CONSTRUCTION BASELINE RAMP D.
4. FOR SUPERELEVATION TRANSITIONS SEE DWGS. GG-01 AND GG-03.
5. FOR CONSTRUCTION BASELINE RAMP D, SEE DWG. HV-02.
6. 'D' = 12¾" AT ℄ BEARING FROM TOP OF WEB TO TOP OF LMC OVERLAY.
7. THE TOP SURFACE OF THE CLASS D CONCRETE DECK SHALL BE ROUGH FINISHED TO A FULL AMPLITUDE OF ¼". THE CONCRETE SHALL BE SCRUBBED TRANSVERSELY WITH A COARSE WIRE BRUSH TO REMOVE ALL LAITANCE AND TO PRODUCE A ROUGHENED SURFACE FOR BONDING WITH THE LMC OVERLAY.

UNOFFICIAL WEBSITE COPY

N:\31987-004\Contract_Ramp_D\CADD\Bridge\BRI-748S_TS02.dgn
8/23/2019 4:30:22 PM

ADDENDA / REVISIONS	SCALE AS NOTED	REHABILITATION OF I-95, 2ND STREET ON-RAMP IMPROVEMENTS	CONTRACT T201907402	BRIDGE NO. 1 748S 059	BRIDGE TYPICAL SECTION STA. 1300+34 TO 1303+72	TS-02
			COUNTY NEW CASTLE	DESIGNED BY: D. NIZAMOFF		SECTION WRA
				CHECKED BY: W. GESCHREI		SHEET NO. 38

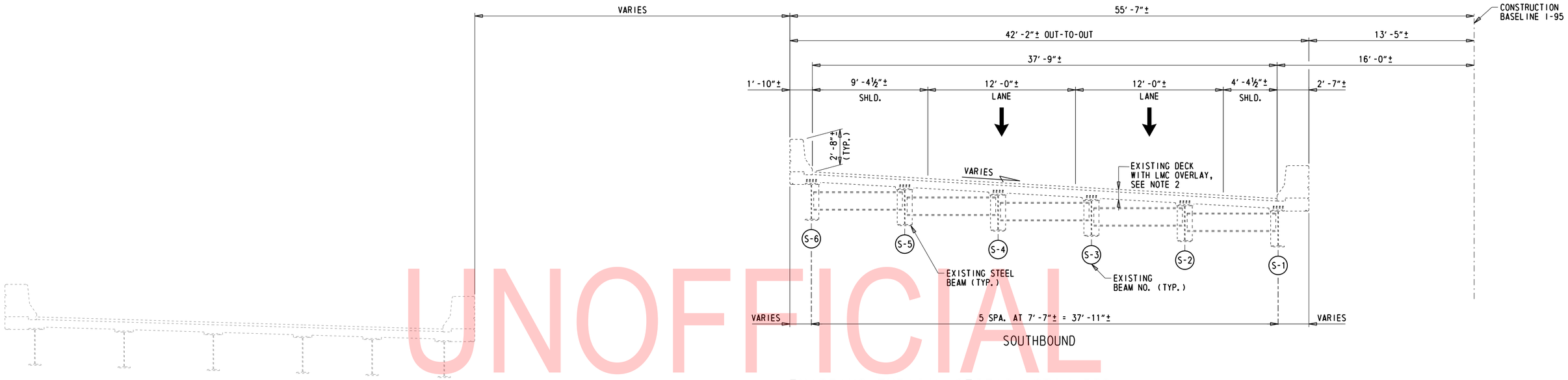

EXISTING TYPICAL SECTION SPAN 38S

(STA. 1303+72.61 TO STA. 1304+40.15 I-95 SB)

¼″ = 1′-0″

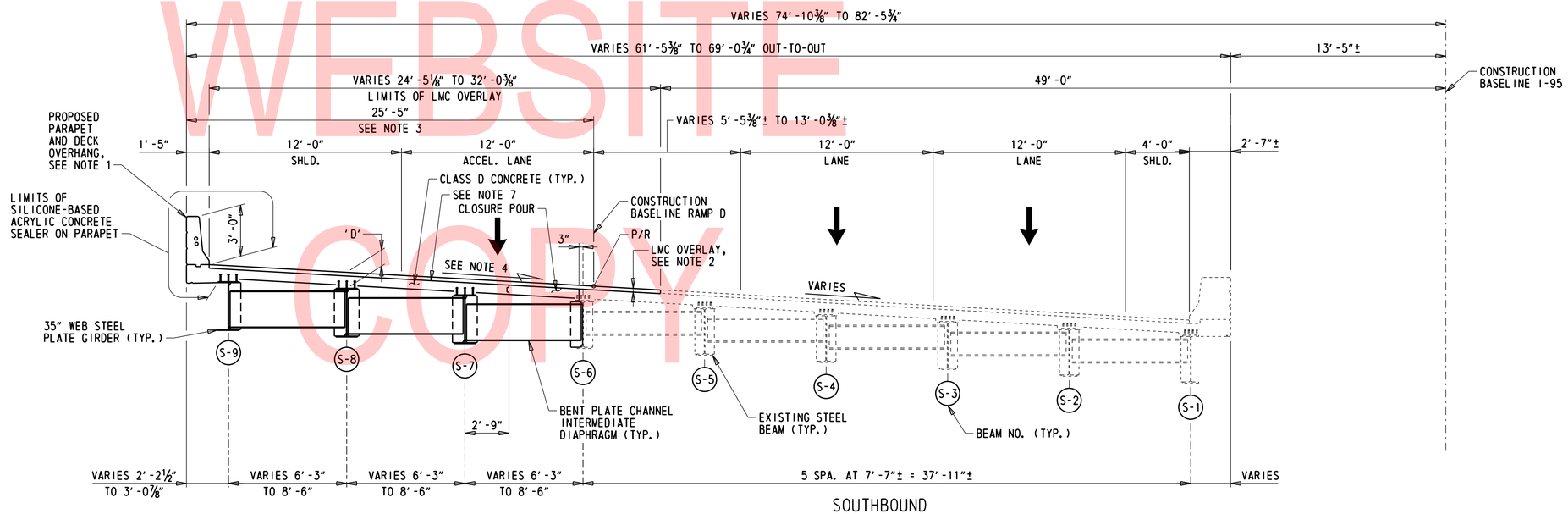

PROPOSED TYPICAL SECTION SPAN 38S

(STA. 1303+72.61 TO STA. 1304+40.15 I-95 SB)

¼″ = 1′-0″

NOTES:

1. FOR PARAPET DETAIL, DRIP NOTCH DETAIL, AND ARCHITECTURAL GROOVE DETAIL, SEE DWG. PA-01.
2. THICKNESSES OF EXISTING DECK AND PROPOSED LMC OVERLAYS VARY, SEE DWGS. DM-02 AND DM-03 FOR DETAILS.
3. IN SPANS 33S THROUGH 39S THE NEW WEST EDGE OF DECK IS SET 25′-5″ OFFSET FROM THE CONSTRUCTION BASELINE RAMP D.
4. FOR SUPERELEVATION TRANSITIONS SEE DWGS. GG-01 AND GG-03.
5. FOR CONSTRUCTION BASELINE RAMP D, SEE DWG. HV-02.
6. 'D' = 12¾″ AT ℄ BEARING FROM TOP OF WEB TO TOP OF LMC OVERLAY.
7. THE TOP SURFACE OF THE CLASS D CONCRETE DECK SHALL BE ROUGH FINISHED TO A FULL AMPLITUDE OF ¼″. THE CONCRETE SHALL BE SCRUBBED TRANSVERSELY WITH A COARSE WIRE BRUSH TO REMOVE ALL LAITANCE AND TO PRODUCE A ROUGHENED SURFACE FOR BONDING WITH THE LMC OVERLAY.

UNOFFICIAL WEBSITE COPY

ADDENDA / REVISIONS	SCALE AS NOTED	REHABILITATION OF I-95, 2ND STREET ON-RAMP IMPROVEMENTS	CONTRACT T201907402	BRIDGE NO. 1 748S 059	BRIDGE TYPICAL SECTION STA. 1303+72 TO 1304+40	TS-03
			COUNTY NEW CASTLE	DESIGNED BY: D. NIZAMOFF		SECTION WRA
				CHECKED BY: W. GESCHREI		SHEET NO. 39

N:\31987-004\Contract_Ramp_D\CADD\Bridge\BR1-748S_TS03.dgn
8/23/2019 4:30:23 PM

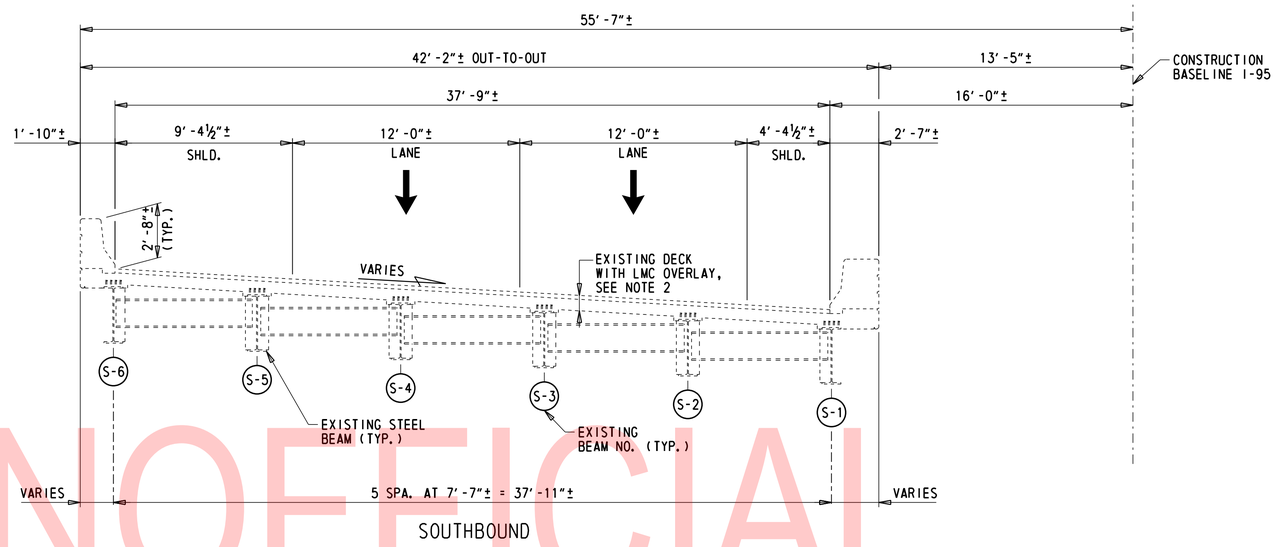

EXISTING TYPICAL SECTION SPAN 39S

(STA. 1304+40.15 TO STA. 1305+08.44 I-95 SB)

¼" = 1'-0"

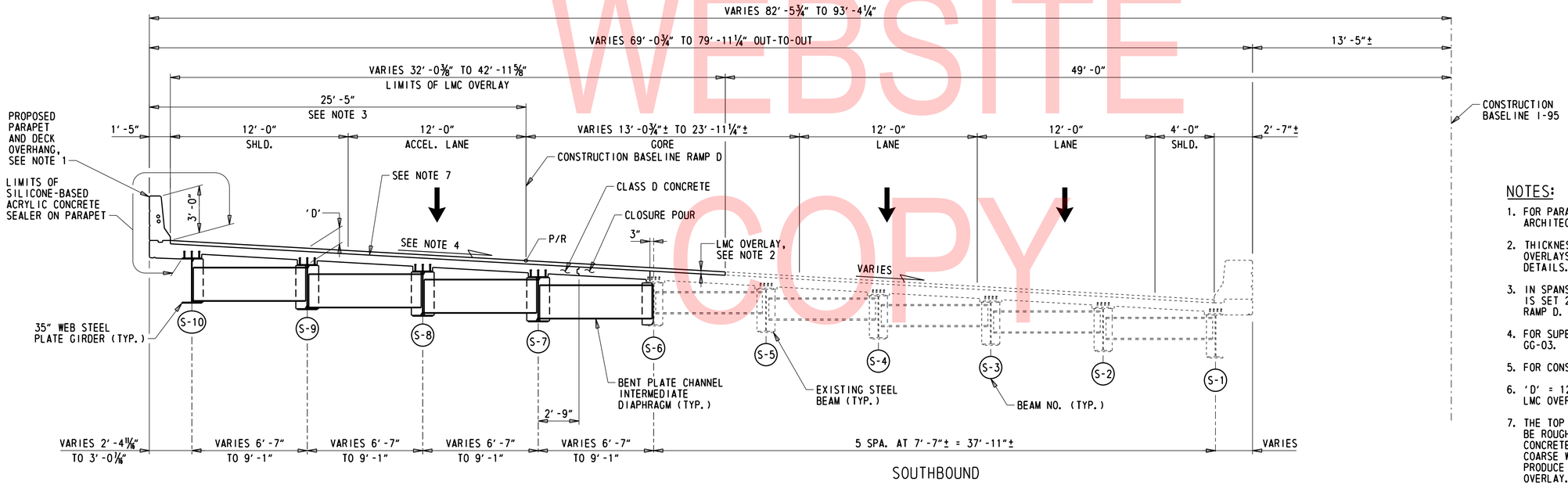

PROPOSED TYPICAL SECTION SPAN 39S

(STA. 1304+40.15 TO STA. 1305+08.44 I-95 SB)

¼" = 1'-0"

NOTES:

1. FOR PARAPET DETAIL, DRIP NOTCH DETAIL, AND ARCHITECTURAL GROOVE DETAIL, SEE DWG. PA-01.
2. THICKNESSES OF EXISTING DECK AND PROPOSED LMC OVERLAYS VARY, SEE DWGS. DM-02 AND DM-03 FOR DETAILS.
3. IN SPANS 33S THROUGH 39S THE NEW WEST EDGE OF DECK IS SET 25'-5" OFFSET FROM THE CONSTRUCTION BASELINE RAMP D.
4. FOR SUPERELEVATION TRANSITIONS SEE DWGS. GG-01 AND GG-03.
5. FOR CONSTRUCTION BASELINE RAMP D, SEE DWG. HV-02.
6. 'D' = 12¾" AT ℄ BEARING FROM TOP OF WEB TO TOP OF LMC OVERLAY.
7. THE TOP SURFACE OF THE CLASS D CONCRETE DECK SHALL BE ROUGH FINISHED TO A FULL AMPLITUDE OF ¼". THE CONCRETE SHALL BE SCRUBBED TRANSVERSELY WITH A COARSE WIRE BRUSH TO REMOVE ALL LAITANCE AND TO PRODUCE A ROUGHENED SURFACE FOR BONDING WITH THE LMC OVERLAY.

UNOFFICIAL WEBSITE COPY

ADDENDA / REVISIONS	SCALE AS NOTED	REHABILITATION OF I-95, 2ND STREET ON-RAMP IMPROVEMENTS	CONTRACT T201907402	BRIDGE NO. 1 748S 059	BRIDGE TYPICAL SECTION STA. 1304+40 TO 1305+08	TS-04
			COUNTY NEW CASTLE	DESIGNED BY: D. NIZAMOFF		SECTION WRA
				CHECKED BY: W. GESCHREI		SHEET NO. 40

N:\31987-004\Contract_Ramp_D\CADD\Bridge\BRI-748S_TS04.dgn
8/23/2019 4:30:24 PM

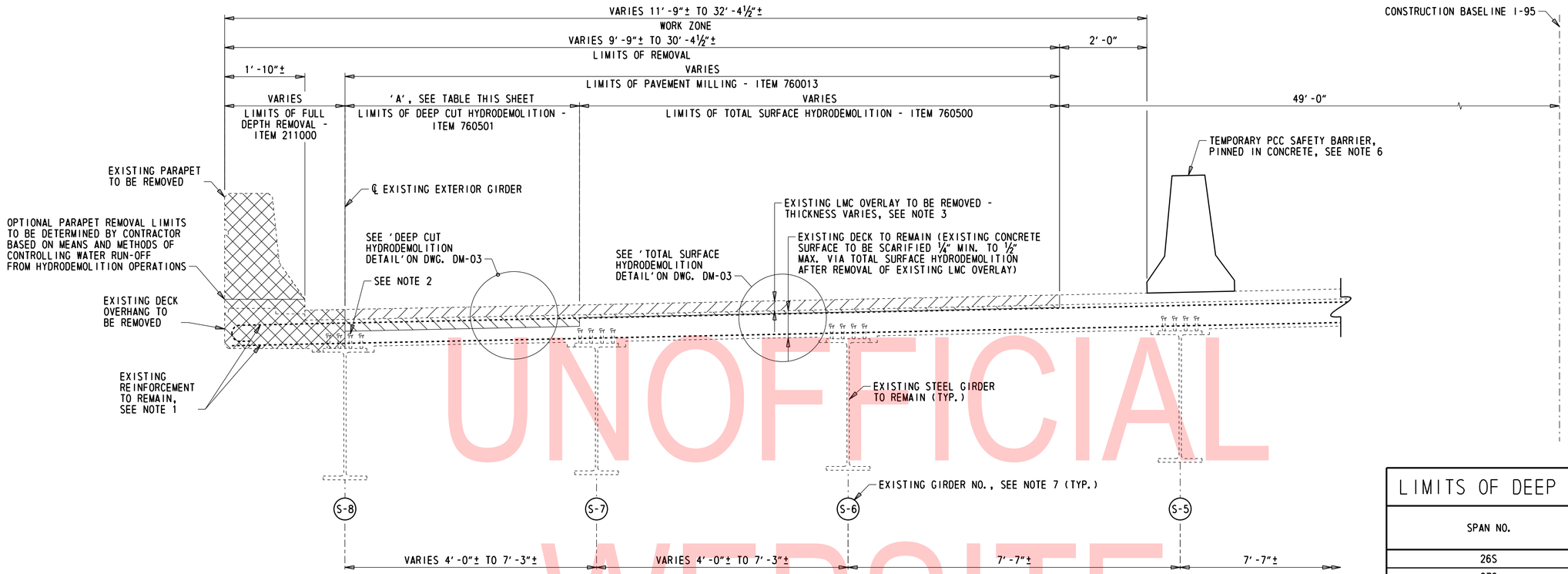

LIMITS OF DEMOLITION SPANS 26S TO 32S

(1294+53.58 TO 1300+34.00)

¾" = 1'-0"

LIMITS OF DEEP CUT HYDRODEMOLITION	
SPAN NO.	DIMENSION 'A'
26S	5'-6"
27S	5'-6"
28S	5'-6"
29S	4'-3"
30S	5'-3"
31S	4'-3"
32S	5'-3"

SUGGESTED SEQUENCE OF CONSTRUCTION:

THIS SEQUENCE OF CONSTRUCTION REPRESENTS THE GENERAL ORDER OF OPERATIONS REQUIRED TO RECONSTRUCT THE FASCIA PARAPETS AND PLACE THE PROPOSED OVERLAY. IT IS NOT INTENDED TO REPRESENT ALL ACTIVITIES NECESSARY TO COMPLETE THE WORK AS SPECIFIED. THE CONTRACTOR MAY ALTER THIS SUGGESTED SEQUENCE AND THE REMOVAL AND RECONSTRUCTION LIMITS WITH THE APPROVAL OF THE ENGINEER.

1. INSTALL TEMPORARY WORKS INCLUDING PROTECTIVE SHIELDS, RAILINGS, ETC. AS NECESSARY TO PROTECT THE WORK ZONE AND AREAS UNDER AND ADJACENT TO THE CONSTRUCTION.
2. REMOVE EXISTING EXTERIOR PARAPET TO THE LIMITS SHOWN.
3. REMOVE EXISTING LMC OVERLAY VIA PAVEMENT MILLING WITHIN THE LIMITS OF DEEP CUT HYDRODEMOLITION AS SHOWN.
4. PERFORM DEEP CUT HYDRODEMOLITION TO THE LIMITS SHOWN.
5. REMOVE THE EXISTING OVERHANG TO THE LIMITS SHOWN.
6. RECONSTRUCT THE DECK OVERHANG. SEE DWGS. DK-01 TO DK-07 FOR DETAILS.
7. CONSTRUCT NEW 36" F-SHAPE PARAPET. SEE DWG. PA-01 FOR DETAILS.
8. REMOVE EXISTING LMC OVERLAY VIA PAVEMENT MILLING WITHIN THE LIMITS OF TOTAL SURFACE HYDRODEMOLITION AS SHOWN.
9. PERFORM TOTAL SURFACE HYDRODEMOLITION TO THE LIMITS SHOWN.
10. PLACE NEW LMC OVERLAY.

LEGEND:

- LIMITS OF REMOVAL, PAVEMENT MILLING (ITEM 760013)
- LIMITS OF REMOVAL, HYDRODEMOLITION (ITEM 760500 OR 760501)
- LIMITS OF REMOVAL (ITEM 211000)

NOTES:

1. EXISTING TOP AND BOTTOM TRANSVERSE REINFORCEMENT BARS TO REMAIN SHALL BE INTEGRATED INTO NEW OVERHANG. DEEP CUT HYDRODEMOLITION SHALL BE PERFORMED TO THE DEPTH SHOWN IN THE DETAIL ON DWG. DM-03. NEW OVERHANG BARS SHALL BE LAPPED WITH EXISTING TOP BARS.

   EXISTING BARS TO REMAIN SHALL BE CLEANED IN ACCORDANCE WITH SECTION 628.03(E)(7). BARS WITH CORROSION, BROKEN, OR WITH INADEQUATE BOND SHALL BE REPAIRED IN ACCORDANCE WITH SUBSECTION 628.03(E)(7). PAYMENT FOR THIS WORK WILL BE INCIDENTAL TO ITEM 211000 - REMOVAL OF STRUCTURES AND OBSTRUCTIONS.

   ALL EXISTING LONGITUDINAL REINFORCEMENT WITHIN THE LIMITS OF FULL DEPTH REMOVAL SHALL BE REMOVED AND REPLACED. EXISTING LONGITUDINAL REINFORCEMENT NOT SHOWN FOR CLARITY. SEE DWGS. DK-01 TO DK-07 FOR ADDITIONAL DETAILS.
2. EXISTING SHEAR STUDS ON TOP FLANGE OF FASCIA GIRDERS SHALL REMAIN IN PLACE FOLLOWING FULL DEPTH REMOVAL OF THE OVERHANG. EXISTING SHEAR STUDS SHALL BE CLEANED OF ALL LOOSE CONCRETE, DEBRIS, OIL, ETC. PAYMENT FOR CLEANING EXISTING SHEAR STUDS WILL BE INCIDENTAL TO ITEM 211000 - REMOVAL OF STRUCTURES AND OBSTRUCTIONS. EXISTING SHEAR STUDS DAMAGED DURING REMOVAL OPERATIONS SHALL BE REPLACED IN-KIND AT THE CONTRACTOR'S EXPENSE. CONTRACTOR MAY CHOOSE TO REMOVE AND REPLACE IN-KIND ALL EXPOSED SHEAR STUDS ON FASCIA GIRDERS AT NO ADDITIONAL COST TO THE DEPARTMENT.
3. THICKNESS OF EXISTING LMC OVERLAY VARIES. DECK CORES DEPICTING THE OVERLAY THICKNESS WERE TAKEN IN NOVEMBER/DECEMBER 2014. THE CORING REPORT IS INCLUDED WITH THE CONTRACT DOCUMENTS.
4. TYPICAL SECTION SHOWN IS VALID FOR STATION LIMITS AS NOTED.
5. VEHICLES AND EQUIPMENT WILL NOT BE PERMITTED ON AREAS OF THE DECK THAT HAVE RECEIVED DEEP CUT HYDRODEMOLITION. VEHICLES AND EQUIPMENT SHOULD BE KEPT OFF OF AREAS OF THE DECK THAT HAVE RECEIVED TOTAL SURFACE HYDRODEMOLITION AS MUCH AS REASONABLY POSSIBLE - ONLY EQUIPMENT NECESSARY TO COMPLETE THE WORK WILL BE ALLOWED ON THOSE AREAS.
6. TEMPORARY PCC SAFETY BARRIER SHALL BE PINNED WHEREVER THE SOUTHBOUND BRIDGE PARAPET IS REMOVED. SEE NOTE 8 ON DWG. PN-01 FOR ADDITIONAL INFORMATION.
7. GIRDER NUMBERS SHOWN REPRESENT SPANS 26S THROUGH 30S. IN SPANS 31S AND 32S THERE ARE A TOTAL OF 9 GIRDERS. SEE THE FRAMING PLAN IN THE EXISTING PLANS FOR MORE INFO.

UNOFFICIAL WEBSITE COPY

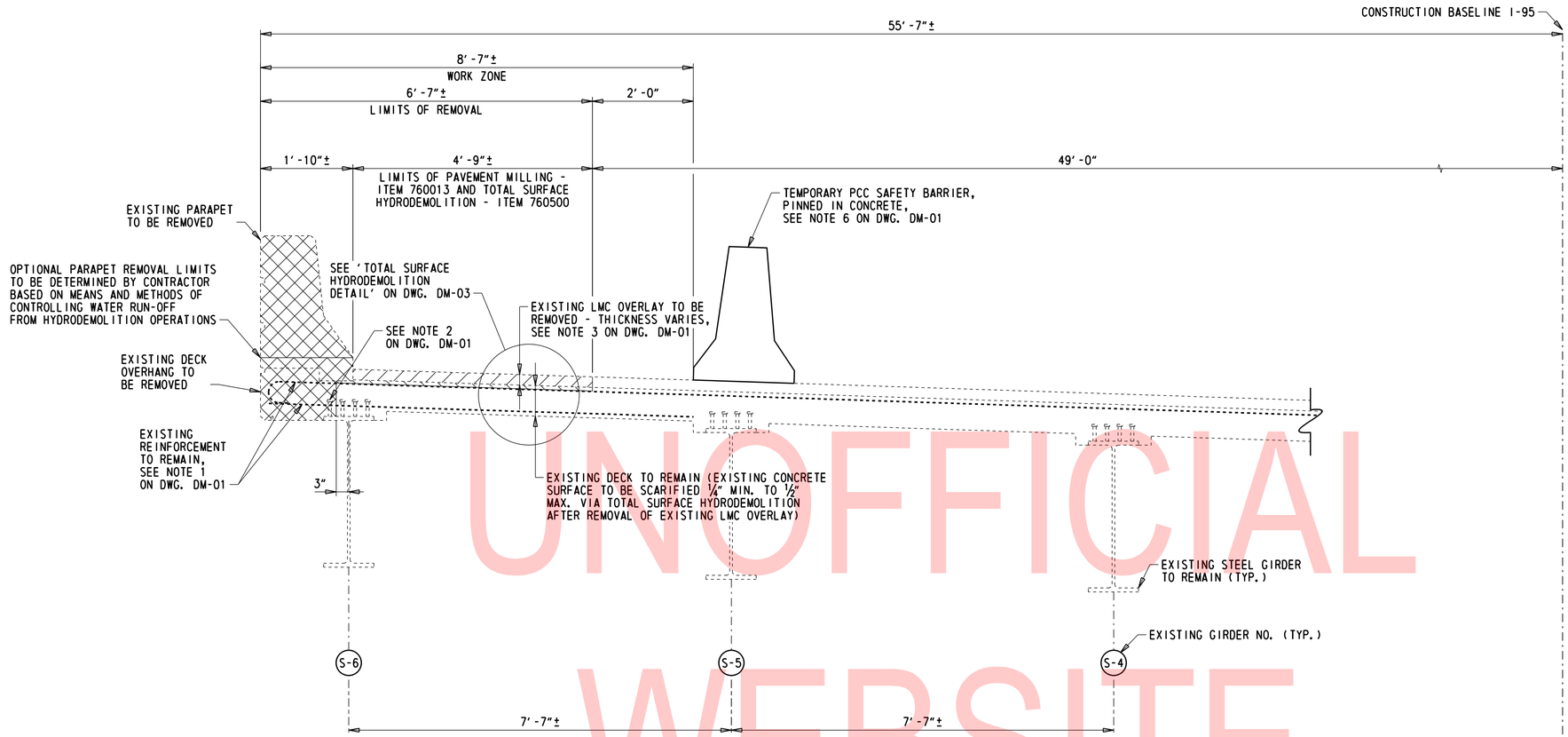

LIMITS OF DEMOLITION SPANS 33S TO 39S

(1300+34.00 TO 1305+08.44)

¾" = 1'-0"

SUGGESTED SEQUENCE OF CONSTRUCTION:

THIS SEQUENCE OF CONSTRUCTION REPRESENTS THE GENERAL ORDER OF OPERATIONS REQUIRED TO WIDEN SPANS 33S TO 39S AND PLACE THE PROPOSED OVERLAY. IT IS NOT INTENDED TO REPRESENT ALL ACTIVITIES NECESSARY TO COMPLETE THE WORK AS SPECIFIED. THE CONTRACTOR MAY ALTER THIS SUGGESTED SEQUENCE AND THE REMOVAL AND RECONSTRUCTION LIMITS WITH THE APPROVAL OF THE ENGINEER.

1. INSTALL TEMPORARY WORKS INCLUDING PROTECTIVE SHIELDS, RAILINGS, ETC. AS NECESSARY TO PROTECT THE WORK ZONE AND AREAS UNDER AND ADJACENT TO THE CONSTRUCTION.
2. REMOVE EXISTING EXTERIOR PARAPET TO THE LIMITS SHOWN.
3. REMOVE EXISTING LMC OVERLAY VIA PAVEMENT MILLING WITHIN THE LIMITS SHOWN.
4. PERFORM TOTAL SURFACE HYDRODEMOLITION TO THE LIMITS SHOWN.
5. REMOVE THE EXISTING OVERHANG TO THE LIMITS SHOWN.
6. SET NEW GIRDERS, FORM AND POUR DECK ON NEW GIRDERS. SEE DWGS. FR-01, FR-02 AND DK-08 TO DK-16 FOR DETAILS.
7. CONSTRUCT NEW 36" F-SHAPE PARAPET. SEE DWG. PA-01 FOR DETAILS.
8. FORM AND POUR CLOSER POUR. SEE DWGS. DK-08 TO DK-16 FOR DETAILS.
9. PLACE NEW LMC OVERLAY.

LEGEND:

- LIMITS OF REMOVAL, PAVEMENT MILLING (ITEM 760013)
- LIMITS OF REMOVAL, TOTAL SURFACE HYDRODEMOLITION (ITEM 760500)
- LIMITS OF REMOVAL (ITEM 211000)

NOTES:

1. FOR DEMOLITION NOTES, SEE DWG. DM-01.

UNOFFICIAL WEBSITE COPY

N:\31987-004\Contract_Ramp_D\CADD\Bridge\BR1-748S_DM02.dgn
8/23/2019 4:30:25 PM

ADDENDA / REVISIONS		SCALE AS NOTED	REHABILITATION OF I-95, 2ND STREET ON-RAMP IMPROVEMENTS	CONTRACT T201907402	BRIDGE NO. 1 748S 059	DEMOLITION DETAILS 2 OF 3	DM-02
				COUNTY NEW CASTLE	DESIGNED BY: D. NIZAMOFF		SECTION WRA
					CHECKED BY: W. GESCHREI		SHEET NO. 42

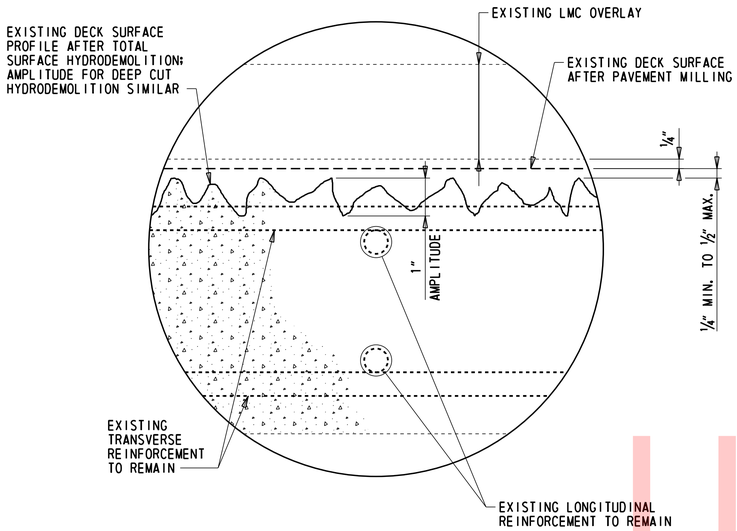

HYDRODEMOLITION AMPLITUDE DETAIL

6" = 1'-0"

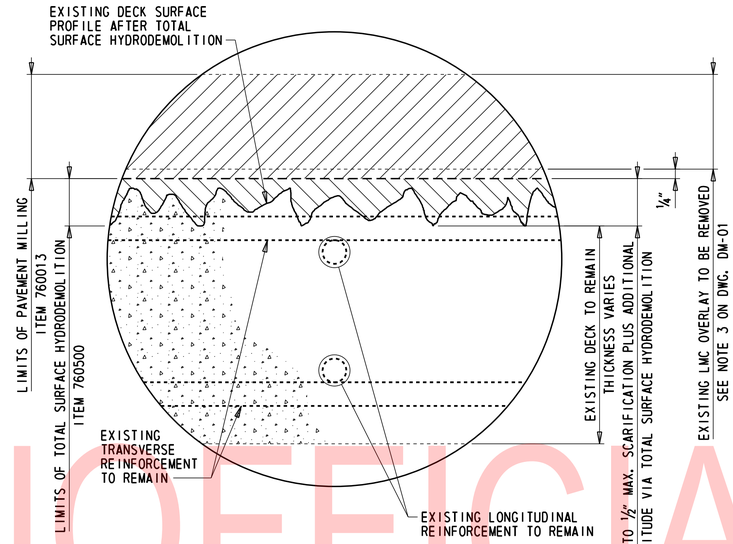

TOTAL SURFACE HYDRODEMOLITION DETAIL

6" = 1'-0"

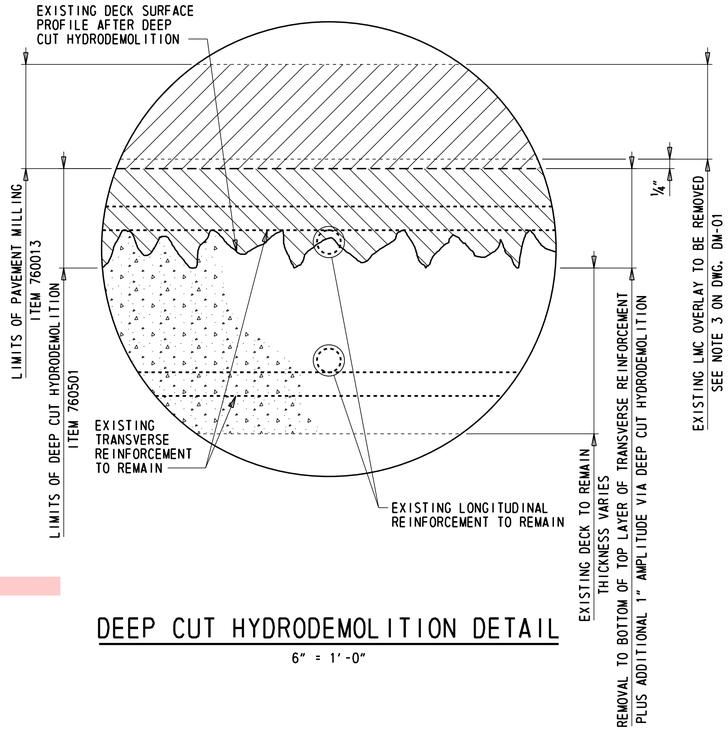

DEEP CUT HYDRODEMOLITION DETAIL

6" = 1'-0"

UNOFFICIAL WEBSITE COPY

LEGEND:

LIMITS OF REMOVAL, PAVEMENT MILLING (ITEM 760013)

LIMITS OF REMOVAL, HYDRODEMOLITION (ITEM 760500 OR 760501)

N:\31987-004\Contract_Ramp_D\CADD\Bridge\BRI-748S_DM03.dgn
8/23/2019 4:30:26 PM

ADDENDA / REVISIONS	

SCALE AS NOTED

REHABILITATION OF I-95, 2ND STREET ON-RAMP IMPROVEMENTS

CONTRACT	BRIDGE NO.	1 748S 059
T201907402	DESIGNED BY: D. NIZAMOFF	
COUNTY		
NEW CASTLE	CHECKED BY: W. GESCHREI	

DEMOLITION DETAILS 3 OF 3

DM-03

SECTION
WRA
SHEET NO.
43

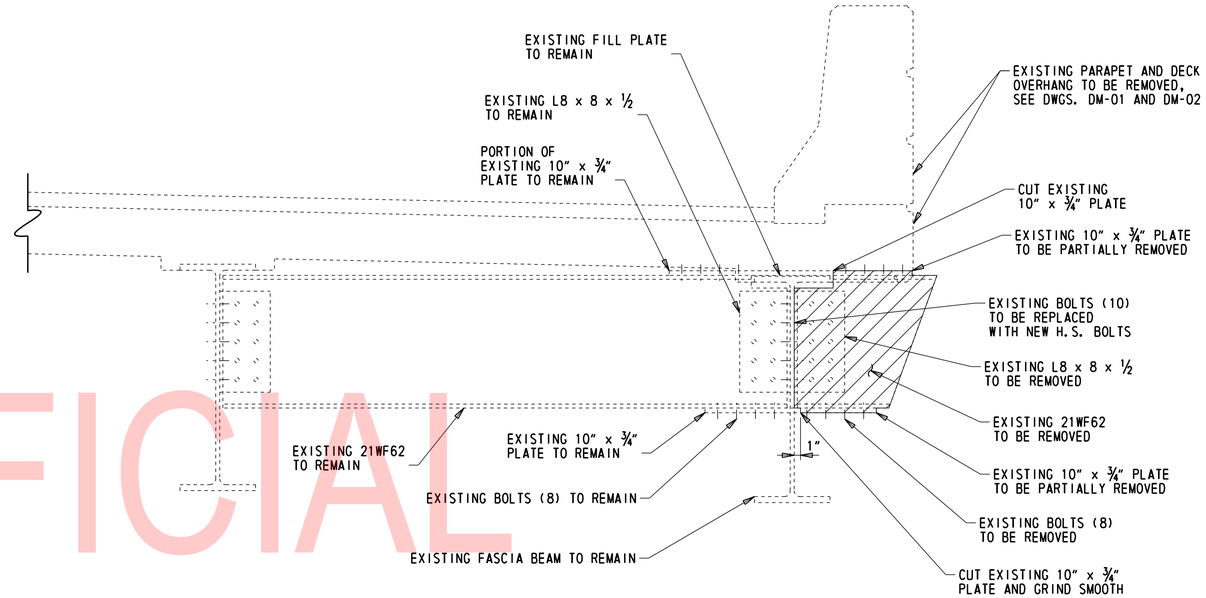

EXISTING BRACKET REMOVAL DETAIL TYPE 2

1" = 1'-0"
(LOOKING SOUTH)

REMOVE STRUCTURAL SIGN SUPPORT BRACKET					
REPAIR NO.	SPAN	FASCIA BEAM NO.	EXISTING PLANS CONTRACT NO.	EXISTING PLANS REF. NO.	REMOVAL DETAIL
28	28S	S-7	64-03-004	RM-2	TYPE 2
28	36S	S-6	64-03-004	W-1	TYPE 2

NOTES:

1. NEW H.S. BOLTS SHALL BE ASTM F3125 GR. A325, TYPE 1.
2. SEE EXISTING PLANS FOR ADDITIONAL SIGN SUPPORT DETAILS.
3. AFTER REMOVAL TOUCH-UP PAINT IN ACCORDANCE WITH SECTION 616 AND AS DIRECTED BY THE ENGINEER.

LEGEND:

LIMITS OF EXISTING STRUCTURE TO BE REMOVED (ITEM 211000)

UNOFFICIAL WEBSITE COPY

N:\31987-004\Contract_Ramp_D\CADD\Bridge\BRI-748S_DM04.dgn
8/23/2019 4:30:27 PM

ADDENDA / REVISIONS	

SCALE AS NOTED

REHABILITATION OF I-95, 2ND STREET ON-RAMP IMPROVEMENTS

CONTRACT	BRIDGE NO.	1 748S 059
T201907402	DESIGNED BY: D. NIZAMOFF	
COUNTY		
NEW CASTLE	CHECKED BY: W. GESCHREI	

EXISTING BRACKET REMOVAL DETAIL

DM-04

SECTION
WRA
SHEET NO.
44

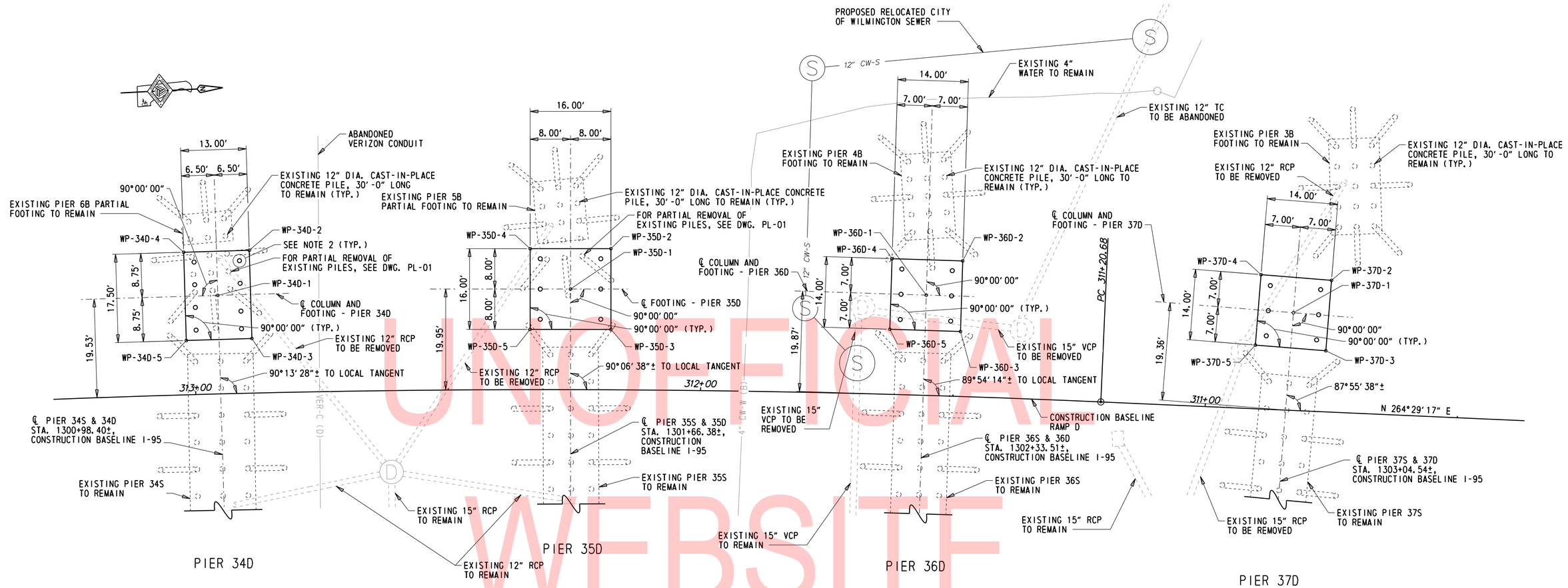

UNOFFICIAL WEBSITE COPY

PIER WORKING POINTS				
POINT	STATION	OFFSET	NORTHING	EASTING
WP-34D-1	312+95.14	19.53' RT.	633611.3826	615073.7872
WP-34D-2	312+88.75	28.31' RT.	633618.0732	615065.1821
WP-34D-3	312+88.64	10.81' RT.	633617.6888	615082.6779
WP-34D-4	313+01.60	28.26' RT.	633605.0764	615064.8966
WP-34D-5	313+01.58	10.76' RT.	633604.6919	615082.3923
WP-35D-1	312+25.81	19.95' RT.	633681.2301	615076.1492
WP-35D-2	312+17.91	27.98' RT.	633689.6343	615068.5750
WP-35D-3	312+17.83	11.98' RT.	633688.8043	615084.5535
WP-35D-4	312+33.73	27.95' RT.	633673.6559	615067.7450
WP-35D-5	312+33.75	11.95' RT.	633672.8259	615083.7234
WP-36D-1	311+55.88	19.87' RT.	633751.5470	615081.0094
WP-36D-2	311+48.94	26.87' RT.	633759.1075	615074.6190
WP-36D-3	311+48.92	12.87' RT.	633757.9374	615088.5700
WP-36D-4	311+62.79	26.89' RT.	633745.1565	615073.4489
WP-36D-5	311+62.85	12.90' RT.	633743.9864	615087.3999
WP-37D-1	310+83.34	19.35' RT.	633824.0048	615088.2730
WP-37D-2	310+76.09	26.10' RT.	633831.8678	615082.2564
WP-37D-3	310+76.60	12.10' RT.	633830.0199	615096.1339
WP-37D-4	310+90.08	26.60' RT.	633817.9902	615080.4085
WP-37D-5	310+90.59	12.61' RT.	633816.1424	615094.2861

FOOTING LAYOUT PLAN

PILE LEGEND:

- PROPOSED MICROPILE
- EXISTING 12" C.I.P. CONCRETE PILE
- EXISTING 12" C.I.P. CONCRETE PILE, BATTERED 1H:4V

NOTES:

1. FOR PILE LAYOUT, SEE PILE LAYOUT PLANS ON DWGS. PL-01 THROUGH PL-07.
2. PRIOR TO INSTALLING MICROPILES AT PIERS 34D AND 35D CONTRACTOR SHALL VERIFY LOCATION OF EXISTING PILES TO AVOID CONFLICTS WHILE INSTALLING NEW MICROPILES. IF A POTENTIAL CONFLICT IS FOUND CONTRACTOR SHALL NOTIFY ENGINEER IMMEDIATELY WITH SURVEY INFORMATION OF THE POTENTIAL CONFLICT. COST OF SURVEY SHALL BE INCIDENTAL TO ITEM 763501 - CONSTRUCTION ENGINEERING.
3. IF DURING MICROPILE INSTALLATION A CONFLICT IS ENCOUNTERED, CONTRACTOR SHALL NOTIFY THE ENGINEER IMMEDIATELY.

ADDENDA / REVISIONS

SCALE 0 10 20 30 FEET

REHABILITATION OF I-95, 2ND STREET ON-RAMP IMPROVEMENTS

CONTRACT	BRIDGE NO.	1 748S 059
T201907402	DESIGNED BY: D. NIZAMOFF	
COUNTY		
NEW CASTLE	CHECKED BY: W. GESCHREI	

FOOTING LAYOUT PLAN 1 OF 2

FT-01
SECTION WRA
SHEET NO. 45

N:\31987-004\Contract_Ramp_D\CADD\Bridge\BRI-748S_FT01.dgn
8/23/2019 4:30:27 PM

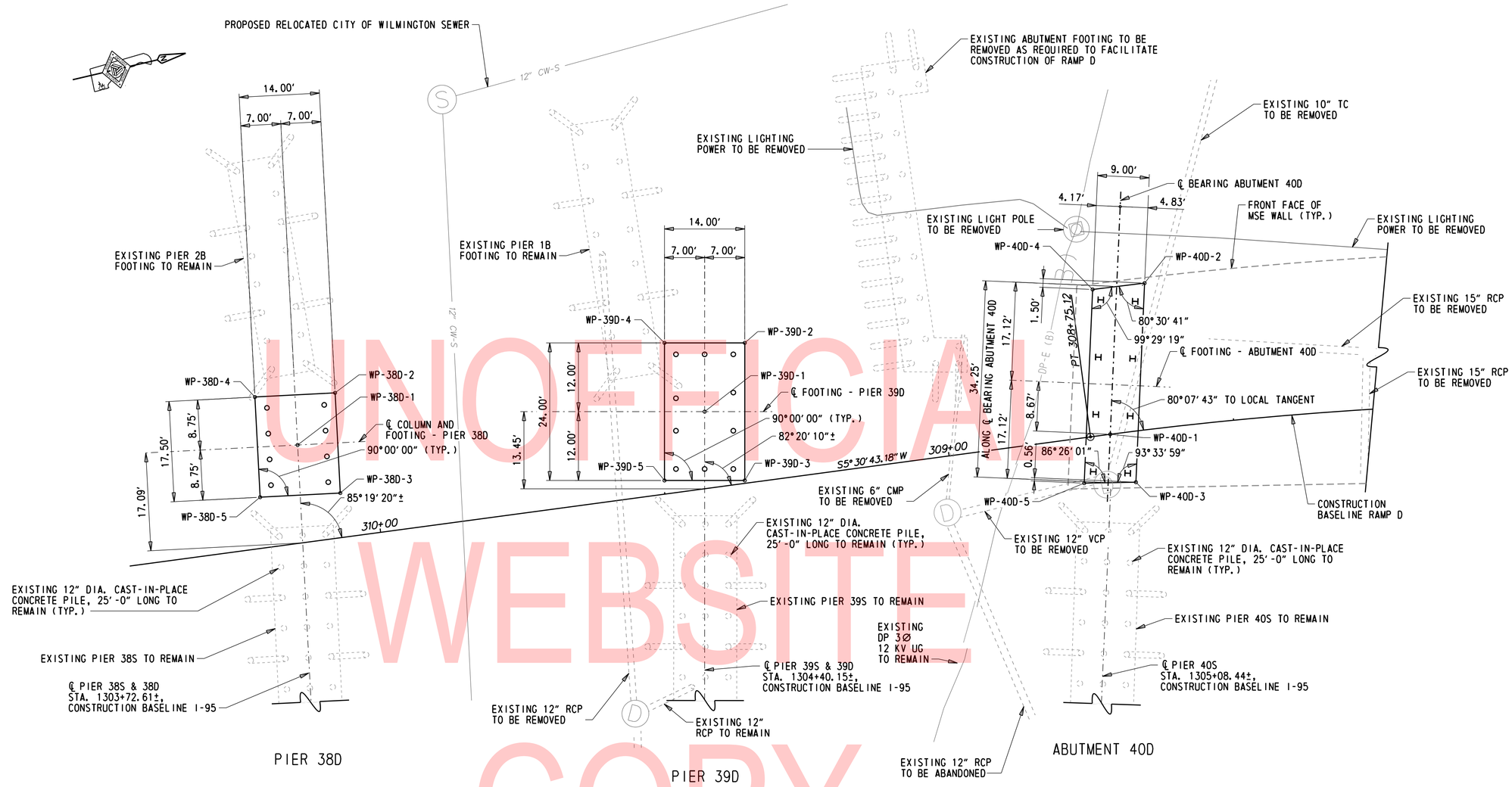

FOOTING LAYOUT PLAN

UNOFFICIAL WEBSITE COPY

WORKING POINTS				
POINT	STATION	OFFSET	NORTHING	EASTING
WP-38D-1	310+12.32	17.03' RT.	633894.4787	615097.4072
WP-38D-2	310+04.63	25.18' RT.	633902.9160	615090.0345
WP-38D-3	310+06.05	7.74' RT.	633899.8201	615107.2585
WP-38D-4	310+18.58	26.32' RT.	633889.1369	615087.5578
WP-38D-5	310+20.01	8.88' RT.	633886.0409	615104.7818
WP-39D-1	309+41.21	13.33' RT.	633964.9031	615107.9209
WP-39D-2	309+32.67	23.29' RT.	633974.4541	615097.8324
WP-39D-3	309+35.87	0.51' RT.	633968.9835	615121.2006
WP-39D-4	309+46.54	26.15' RT.	633960.8227	615094.6412
WP-39D-5	309+49.75	2.37' RT.	633955.3521	615118.0094
WP-40D-1	308+71.65	0.00'	634032.8607	615127.8781
WP-40D-2	308+62.66	25.44' RT.	634044.6999	615103.5738
WP-40D-3	308+68.24	8.86' LT.	634035.3109	615137.0368
WP-40D-4	308+71.46	25.44' RT.	634035.6282	615102.5908
WP-40D-5	308+77.29	7.85' LT.	634026.4940	615135.1456

PILE LEGEND:

- H PROPOSED H-PILE
- o PROPOSED MICROPILE
- EXISTING 12" C.I.P. CONCRETE PILE
- EXISTING 12" C.I.P. CONCRETE PILE, BATTERED 1H:4V

NOTES:

1. FOR PILE LAYOUT, SEE PILE LAYOUT PLANS ON DWGS. PL-01 THROUGH PL-07.
2. IF DURING PILE INSTALLATION A CONFLICT IS ENCOUNTERED, CONTRACTOR SHALL NOTIFY THE ENGINEER IMMEDIATELY.

ADDENDA / REVISIONS

SCALE 0 10 20 30 FEET

REHABILITATION OF I-95, 2ND STREET ON-RAMP IMPROVEMENTS

CONTRACT	BRIDGE NO. 1 748S 059	FOOTING LAYOUT PLAN 2 OF 2	FT-02
T201907402	DESIGNED BY: D. NIZAMOFF		SECTION WRA
COUNTY			SHEET NO.
NEW CASTLE	CHECKED BY: W. GESCHREI		46

N:\31987-00A\Contract_Ramp_D\CADD\Bridge\BR1-748S_FT02.dgn
8/23/2019 4:30:28 PM

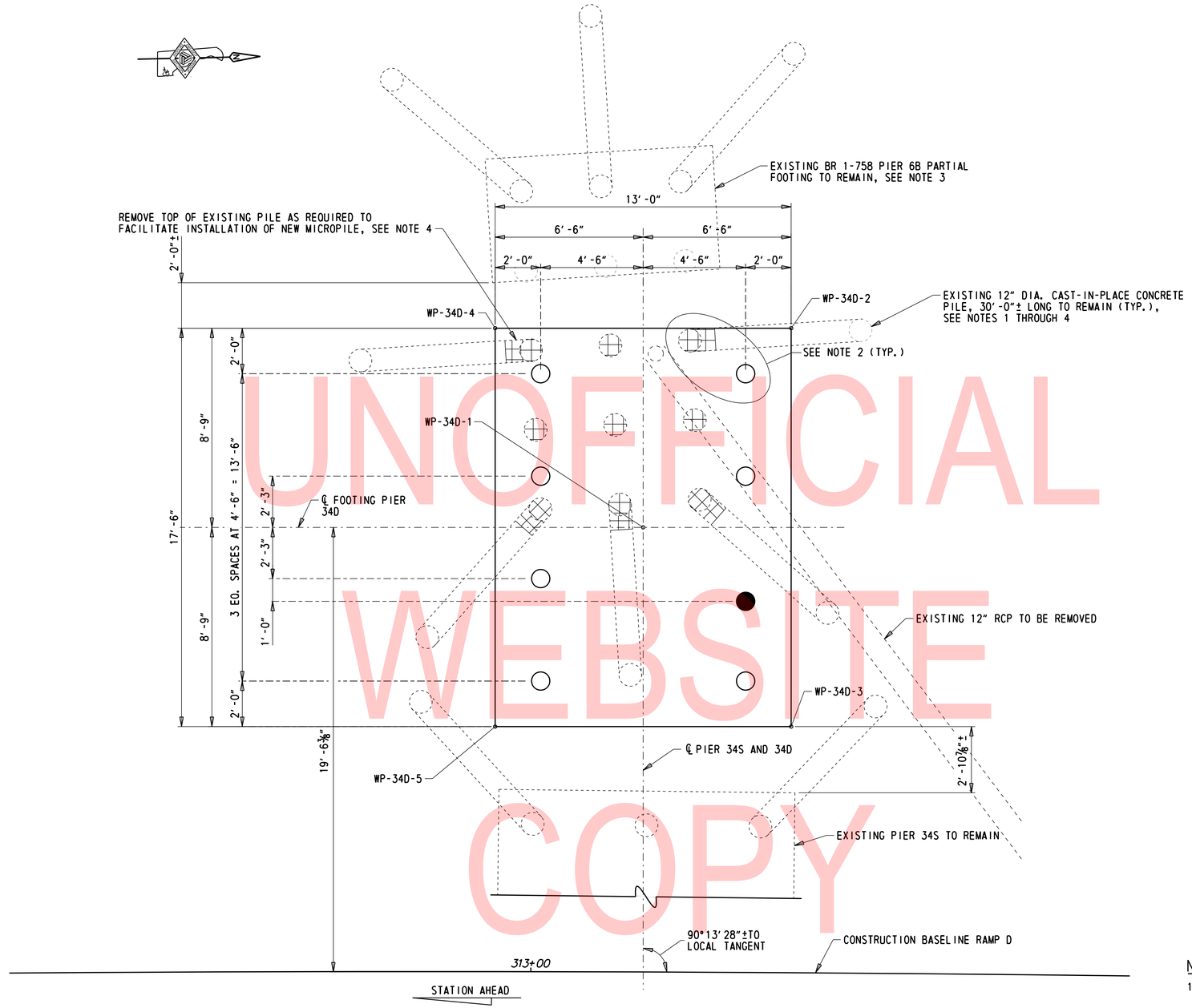

UNOFFICIAL WEBSITE COPY

PILE LAYOUT PLAN - PIER 34D

⅜" = 1'-0"

LEGEND:

- PARTIAL PILE REMOVAL TO 1'-0" BELOW BOTTOM OF PROPOSED FOOTING FOR PIER 34D
- PROPOSED MICROPILE
- PROPOSED MICROPILE AND PROOF PILE TESTING
- EXISTING 12" C.I.P. CONCRETE PILE
- EXISTING 12" C.I.P. CONCRETE PILE, BATTERED 1H:4V

MICROPILE DATA

SUBSTRUCTURE UNIT	DESIGN DATA				ACTUAL FIELD DATA			
	CASING SIZE	BOTTOM OF CASING EL.	MICROPILE TIP ELEVATION	MICROPILE BOND LENGTH	CASING SIZE	BOTTOM OF CASING EL.	MICROPILE TIP EL.	MICROPILE BOND LENGTH
PIER 34D	9⅝" O.D.	-6.0	-25.5	20.5				

NOTES:

1. EXISTING PILE LAYOUT AND PILE TIP LOCATION SHOWN BASED ON EXISTING PLANS AND MAY NOT REFLECT ACTUAL LOCATION.
2. PRIOR TO INSTALLING MICROPILES CONTRACTOR SHALL VERIFY LOCATION OF EXISTING PILES TO AVOID CONFLICTS WHILE INSTALLING NEW MICROPILES. IF A POTENTIAL CONFLICT IS FOUND CONTRACTOR SHALL NOTIFY THE ENGINEER IMMEDIATELY WITH SURVEY INFORMATION OF THE POTENTIAL CONFLICT. COST FOR SURVEY SHALL BE INCIDENTAL TO ITEM 763501 - CONSTRUCTION ENGINEERING.
3. FOR EXISTING PIER 6B PARTIAL DEMOLITION DETAILS, SEE BR 1-758 DWG. DM-03.
4. PAYMENT FOR PARTIAL PILE REMOVAL IS INCIDENTAL TO ITEM 211000 - REMOVAL OF STRUCTURES AND OBSTRUCTIONS.
5. FOR MICROPILE DETAIL AND ADDITIONAL NOTES SEE DWG. PL-09.
6. FOR WORKING POINT INFORMATION, SEE DWG. FT-01.

ADDENDA / REVISIONS

SCALE AS NOTED

REHABILITATION OF I-95, 2ND STREET ON-RAMP IMPROVEMENTS

CONTRACT	BRIDGE NO.	1 748S 059
T201907402	DESIGNED BY: D. NIZAMOFF	
COUNTY		
NEW CASTLE	CHECKED BY: W. GESCHREI	

PILE LAYOUT PLAN PIER 34D

PL-01

SECTION: WRA

SHEET NO. 47

N:\31987-00A\Contract_Ramp_D\CADD\Bridge\BR1-748S_PL01.dgn 8/23/2019 4:30:29 PM

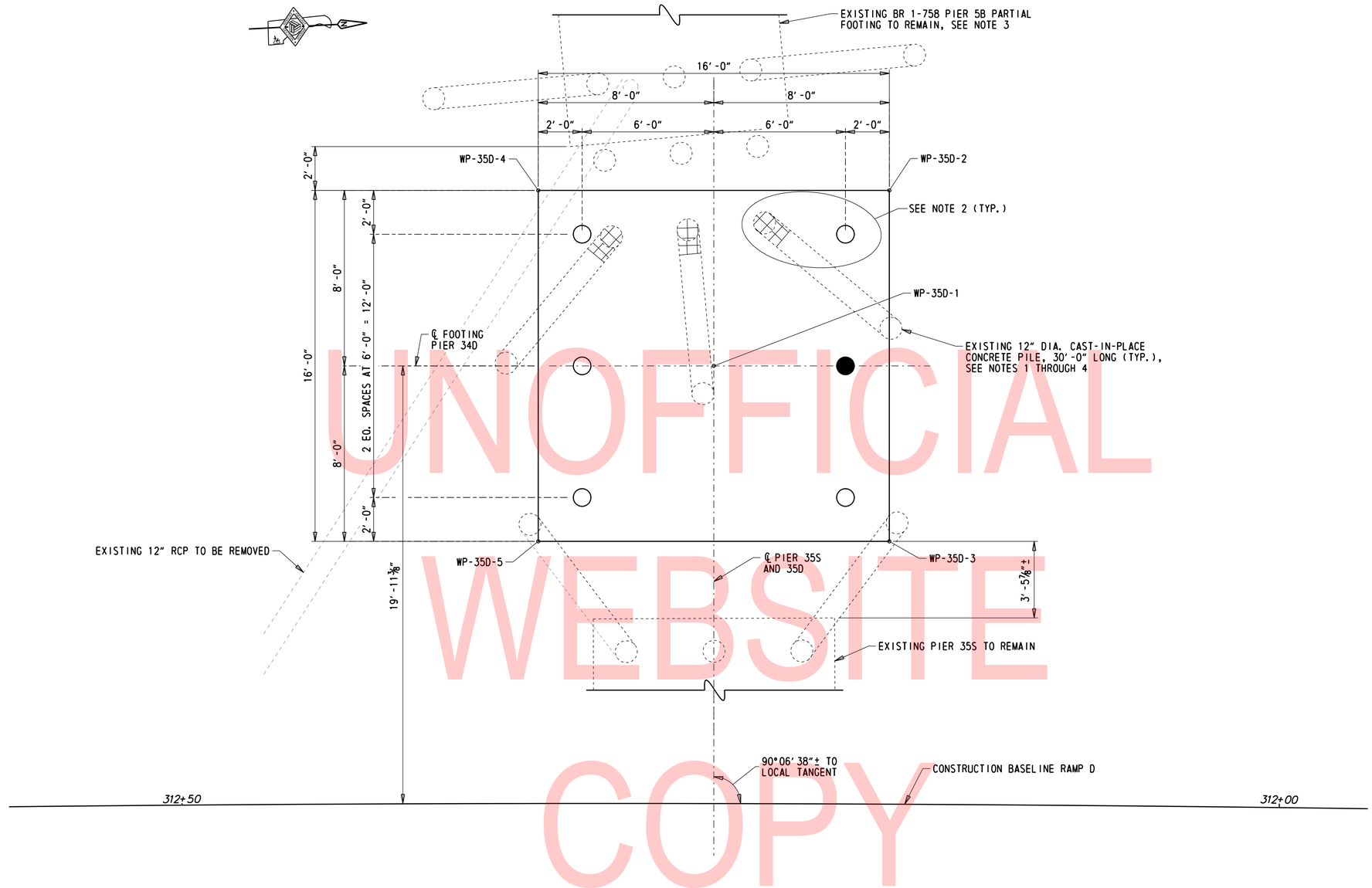

UNOFFICIAL WEBSITE COPY

PILE LAYOUT PLAN - PIER 35D

3/8" = 1'-0"

LEGEND:

- PARTIAL PILE REMOVAL TO 1'-0" BELOW BOTTOM OF PROPOSED FOOTING FOR PIER 35D
- PROPOSED MICROPILE
- PROPOSED MICROPILE AND PROOF PILE TESTING
- EXISTING 12" C.I.P. CONCRETE PILE
- EXISTING 12" C.I.P. CONCRETE PILE, BATTERED 1H:4V

MICROPILE DATA

SUBSTRUCTURE UNIT	DESIGN DATA				ACTUAL FIELD DATA			
	CASING SIZE	BOTTOM OF CASING EL.	MICROPILE TIP EL.	MICROPILE BOND LENGTH	CASING SIZE	BOTTOM OF CASING EL.	MICROPILE TIP EL.	MICROPILE BOND LENGTH
PIER 35D	9 5/8" O.D.	-4.0	-23.5	20.5				

NOTES:

1. EXISTING PILE LAYOUT AND PILE TIP LOCATION SHOWN BASED ON EXISTING PLANS AND MAY NOT REFLECT ACTUAL LOCATION.
2. PRIOR TO INSTALLING MICROPILES CONTRACTOR SHALL VERIFY LOCATION OF EXISTING PILES TO AVOID CONFLICTS WHILE INSTALLING NEW MICROPILES. IF A POTENTIAL CONFLICT IS FOUND CONTRACTOR SHALL NOTIFY THE ENGINEER IMMEDIATELY WITH SURVEY INFORMATION OF THE POTENTIAL CONFLICT. COST OF SURVEY SHALL BE INCIDENTAL TO ITEM 763501 - CONSTRUCTION ENGINEERING.
3. FOR EXISTING PIER 5B PARTIAL DEMOLITION DETAILS, SEE BR 1-758 DWG. DM-03.
4. PAYMENT FOR PARTIAL PILE REMOVAL IS INCIDENTAL TO ITEM 211000 - REMOVAL OF STRUCTURES AND OBSTRUCTIONS.
5. FOR MICROPILE DETAIL AND ADDITIONAL NOTES SEE DWG. PL-09.
6. FOR WORKING POINT INFORMATION, SEE DWG. FT-01.

ADDENDA / REVISIONS

SCALE AS NOTED

REHABILITATION OF I-95, 2ND STREET ON-RAMP IMPROVEMENTS

CONTRACT	BRIDGE NO.	1 748S 059
T201907402	DESIGNED BY: D. NIZAMOFF	
COUNTY		
NEW CASTLE	CHECKED BY: W. GESCHREI	

PILE LAYOUT PLAN PIER 35D

PL-02

SECTION: WRA

SHEET NO. 48

N:\31987-004\Contract_Ramp_D\CADD\Bridge\BR1-748S_PL02.dgn
8/23/2019 4:30:29 PM

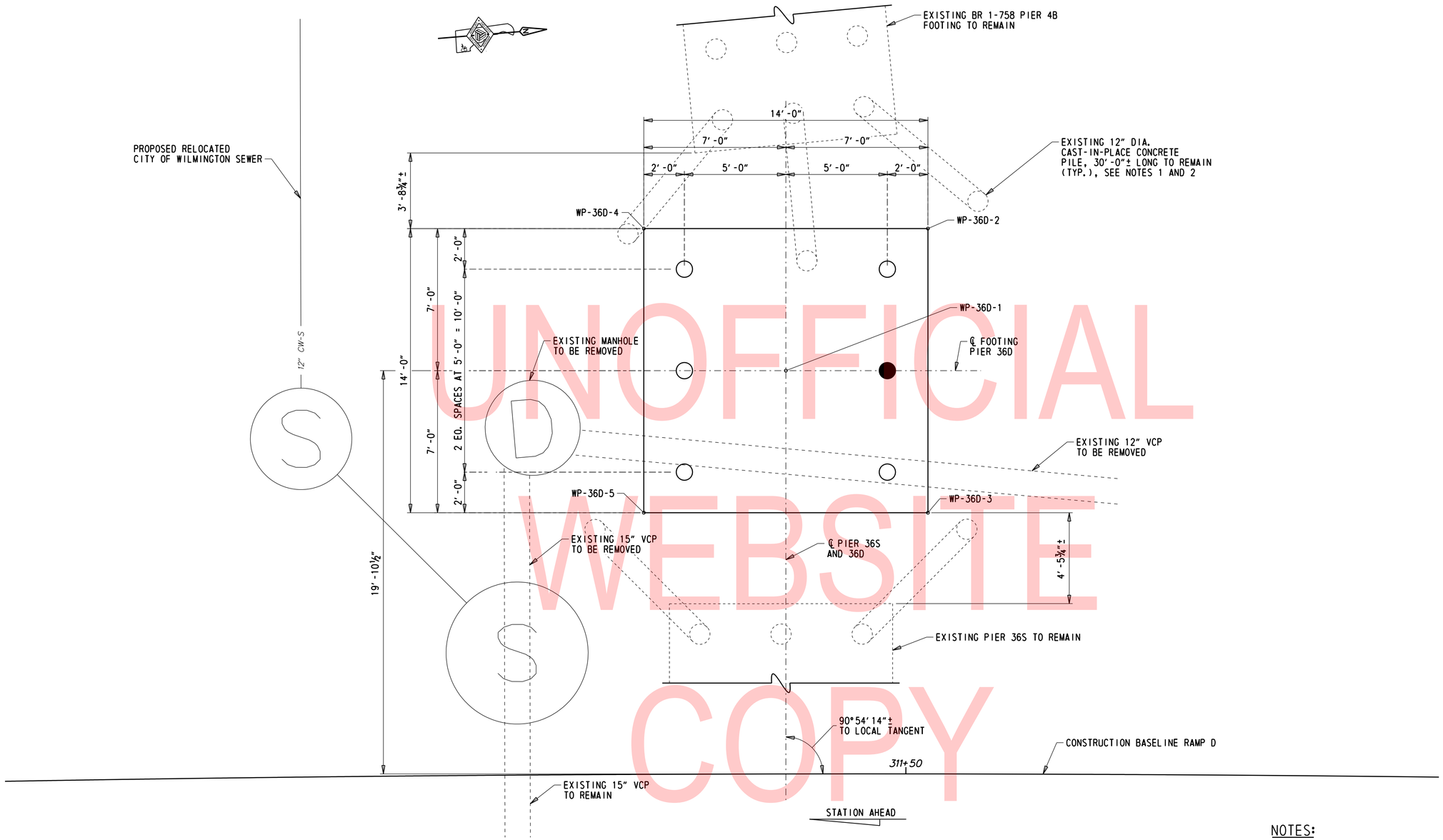

UNOFFICIAL WEBSITE COPY

PILE LAYOUT PLAN - PIER 36D

⅜" = 1'-0"

LEGEND:

- ○ PROPOSED MICROPILE
- ● PROPOSED MICROPILE AND PROOF PILE TESTING
- EXISTING 12" C.I.P. CONCRETE PILE
- EXISTING 12" C.I.P. CONCRETE PILE, BATTERED 1H:4V

NOTES:

1. EXISTING PILE LAYOUT AND PILE TIP LOCATION SHOWN BASED ON EXISTING PLANS AND MAY NOT REFLECT ACTUAL LOCATION.
2. IF DURING MICROPILE INSTALLATION A CONFLICT IS ENCOUNTERED, CONTRACTOR SHALL NOTIFY THE ENGINEER IMMEDIATELY.
3. FOR MICROPILE DETAIL AND ADDITIONAL NOTES SEE DWG. PL-09.
4. FOR WORKING POINT INFORMATION, SEE DWG. FT-01.

MICROPILE DATA

SUBSTRUCTURE UNIT	DESIGN DATA				ACTUAL FIELD DATA			
	CASING SIZE	BOTTOM OF CASING EL.	MICROPILE TIP EL.	MICROPILE BOND LENGTH	CASING SIZE	BOTTOM OF CASING EL.	MICROPILE TIP EL.	MICROPILE BOND LENGTH
PIER 36D	9⅝" O.D.	2.0	-17.5	20.5				

ADDENDA / REVISIONS

SCALE AS NOTED

REHABILITATION OF I-95, 2ND STREET ON-RAMP IMPROVEMENTS

CONTRACT	BRIDGE NO.	1 748S 059
T201907402	DESIGNED BY: D. NIZAMOFF	
COUNTY		
NEW CASTLE	CHECKED BY: W. GESCHREI	

PILE LAYOUT PLAN PIER 36D

PL-03

SECTION: WRA

SHEET NO. 49

N:\31987-004\Control_Ramp_D\CADD\Bridge\BR1-748S_PL03.dgn
8/23/2019 4:30:32 PM

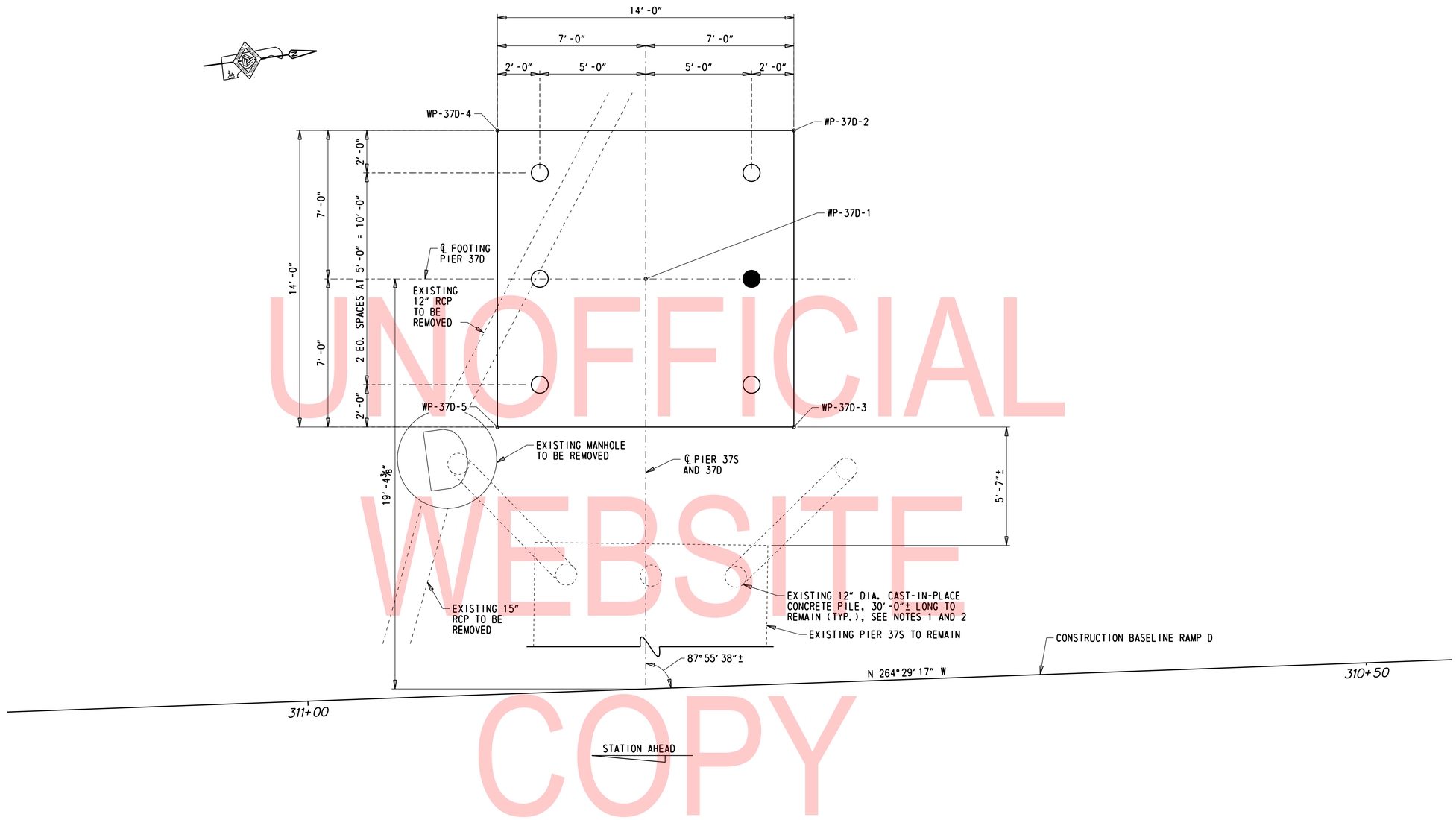

UNOFFICIAL WEBSITE COPY

PILE LAYOUT PLAN - PIER 37D

⅜" = 1'-0"

LEGEND:

- ○ PROPOSED MICROPILE
- ● PROPOSED MICROPILE AND PROOF PILE TESTING
- ◌ EXISTING 12" C.I.P. CONCRETE PILE
- ◌◌ EXISTING 12" C.I.P. CONCRETE PILE, BATTERED 1H:4V

NOTES:

1. EXISTING PILE LAYOUT AND PILE TIP LOCATION SHOWN BASED ON EXISTING PLANS AND MAY NOT REFLECT ACTUAL LOCATION.
2. IF DURING MICROPILE INSTALLATION A CONFLICT IS ENCOUNTERED, CONTRACTOR SHALL NOTIFY THE ENGINEER IMMEDIATELY.
3. FOR MICROPILE DETAIL AND ADDITIONAL NOTES SEE DWG. PL-09.
4. FOR WORKING POINT INFORMATION, SEE DWG. FT-01.

MICROPILE DATA

SUBSTRUCTURE UNIT	DESIGN DATA				ACTUAL FIELD DATA			
	CASING SIZE	BOTTOM OF CASING EL.	MICROPILE TIP EL.	MICROPILE BOND LENGTH	CASING SIZE	BOTTOM OF CASING EL.	MICROPILE TIP EL.	MICROPILE BOND LENGTH
PIER 37D	9⅝" O.D.	2.0	-17.5	20.5				

ADDENDA / REVISIONS

SCALE AS NOTED

REHABILITATION OF I-95, 2ND STREET ON-RAMP IMPROVEMENTS

CONTRACT	BRIDGE NO.	1 748S 059
T201907402	DESIGNED BY: D. NIZAMOFF	
COUNTY	CHECKED BY: W. GESCHREI	
NEW CASTLE		

PILE LAYOUT PLAN PIER 37D

PL-04
SECTION
WRA
SHEET NO.
50

N:\31987-004\Contract_Ramp_D\CADD\Bridge\BRI-748S_PL04.dgn
8/23/2019 4:30:33 PM

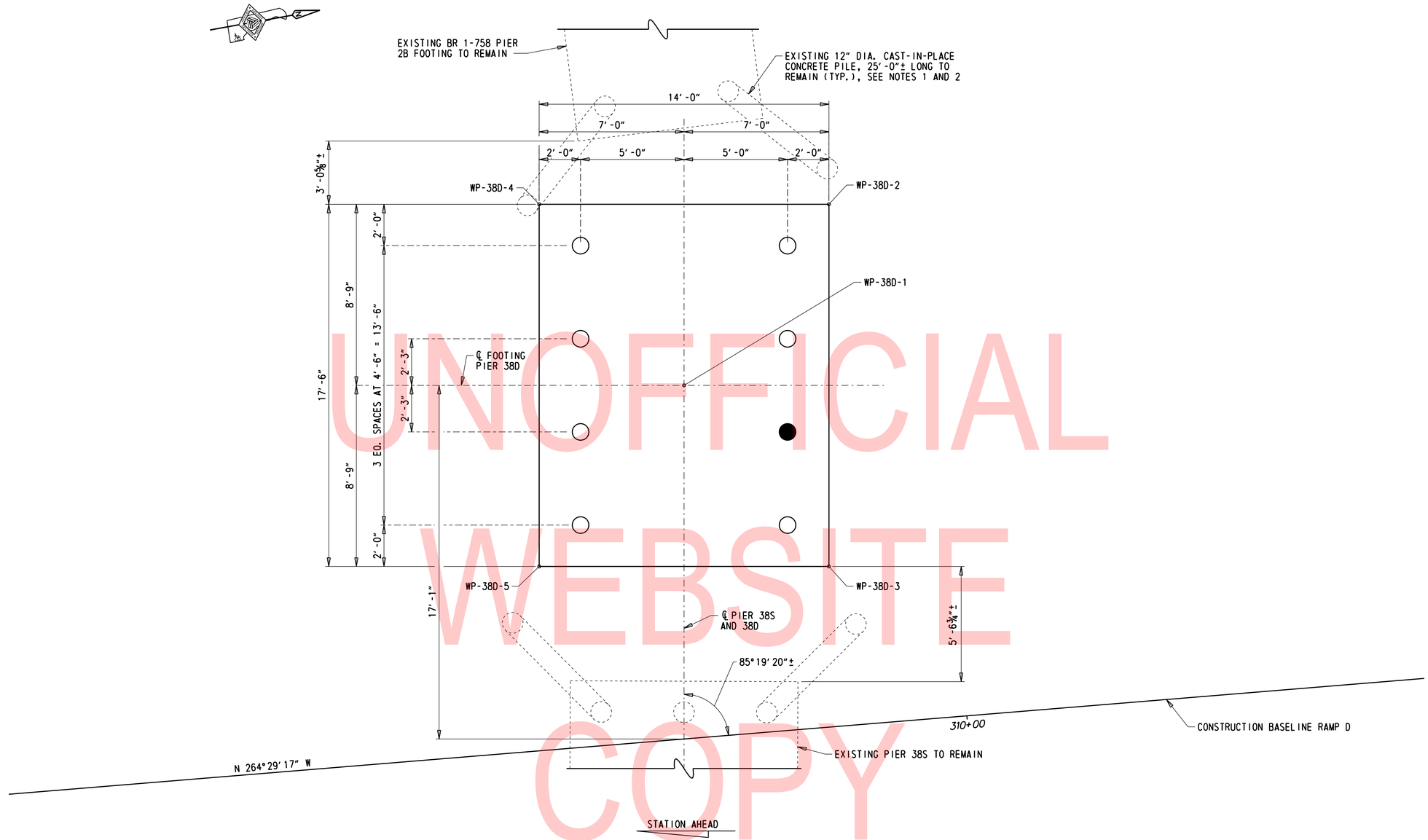

UNOFFICIAL WEBSITE COPY

LEGEND:

- ○ PROPOSED MICROPILE
- ● PROPOSED MICROPILE AND PROOF PILE TESTING
- EXISTING 12" C.I.P. CONCRETE PILE
- EXISTING 12" C.I.P. CONCRETE PILE, BATTERED 1H: 4V

PILE LAYOUT PLAN - PIER 38D

⅜" = 1'-0"

NOTES:

1. EXISTING PILE LAYOUT AND PILE TIP LOCATION SHOWN BASED ON EXISTING PLANS AND MAY NOT REFLECT ACTUAL LOCATION.
2. IF DURING MICROPILE INSTALLATION A CONFLICT IS ENCOUNTERED, CONTRACTOR SHALL NOTIFY THE ENGINEER IMMEDIATELY.
3. FOR MICROPILE DETAIL AND ADDITIONAL NOTES SEE DWG. PL-09.
4. FOR WORKING POINT INFORMATION, SEE DWG. FT-01.

MICROPILE DATA

SUBSTRUCTURE UNIT	DESIGN DATA				ACTUAL FIELD DATA			
	CASING SIZE	BOTTOM OF CASING EL.	MICROPILE TIP EL.	MICROPILE BOND LENGTH	CASING SIZE	BOTTOM OF CASING EL.	MICROPILE TIP EL.	MICROPILE BOND LENGTH
PIER 38D	9⅝" O.D.	4.0	-15.5	20.5				

ADDENDA / REVISIONS

SCALE AS NOTED

REHABILITATION OF I-95, 2ND STREET ON-RAMP IMPROVEMENTS

CONTRACT	BRIDGE NO.	1 748S 059
T201907402	DESIGNED BY: D. NIZAMOFF	
COUNTY		
NEW CASTLE	CHECKED BY: W. GESCHREI	

PILE LAYOUT PLAN PIER 38D

PL-05
SECTION
WRA
SHEET NO.
51

N:\31987-094\Contract_Ramp_D\CADD\Bridge\BR1-748S_PL05.dgn
8/23/2019 4:30:33 PM

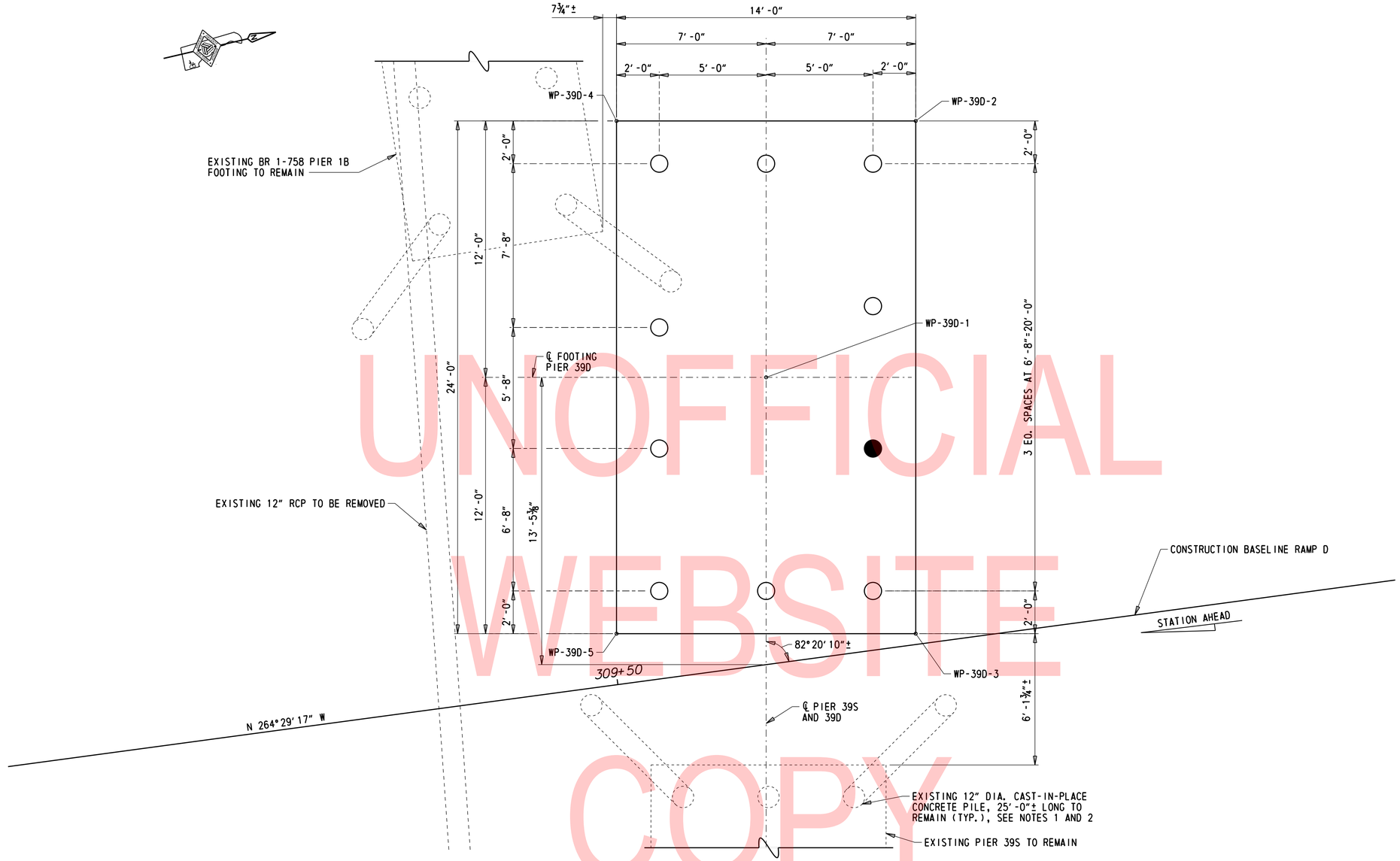

UNOFFICIAL WEBSITE COPY

PILE LAYOUT PLAN - PIER 39D

⅜" = 1'-0"

LEGEND:

- ○ PROPOSED MICROPILE
- ● PROPOSED MICROPILE AND PROOF PILE TESTING
- EXISTING 12" C.I.P. CONCRETE PILE
- EXISTING 12" C.I.P. CONCRETE PILE, BATTERED 1H:4V

NOTES:

1. EXISTING PILE LAYOUT AND PILE TIP LOCATION SHOWN BASED ON EXISTING PLANS AND MAY NOT REFLECT ACTUAL LOCATION.
2. IF DURING MICROPILE INSTALLATION A CONFLICT IS ENCOUNTERED, CONTRACTOR SHALL NOTIFY THE ENGINEER IMMEDIATELY.
3. FOR MICROPILE DETAIL AND ADDITIONAL NOTES SEE DWG. PL-09.
4. FOR WORKING POINT INFORMATION, SEE DWG. FT-01.

MICROPILE DATA

SUBSTRUCTURE UNIT	DESIGN DATA				ACTUAL FIELD DATA			
	CASING SIZE	BOTTOM OF CASING EL.	MICROPILE TIP EL.	MICROPILE BOND LENGTH	CASING SIZE	BOTTOM OF CASING EL.	MICROPILE TIP EL.	MICROPILE BOND LENGTH
PIER 38D	9⅝" O.D.	4.0	-15.5	20.5				

N:\31987-004\Contract_Ramp_D\CADD\Bridge\BRI-748S_PL06.dgn
8/23/2019 4:30:34 PM

ADDENDA / REVISIONS	SCALE AS NOTED	REHABILITATION OF I-95, 2ND STREET ON-RAMP IMPROVEMENTS	CONTRACT T201907402	BRIDGE NO. 1 748S 059	PILE LAYOUT PLAN PIER 39D	PL-06
			COUNTY NEW CASTLE	DESIGNED BY: D. NIZAMOFF		SECTION WRA
				CHECKED BY: W. GESCHREI		SHEET NO. 52

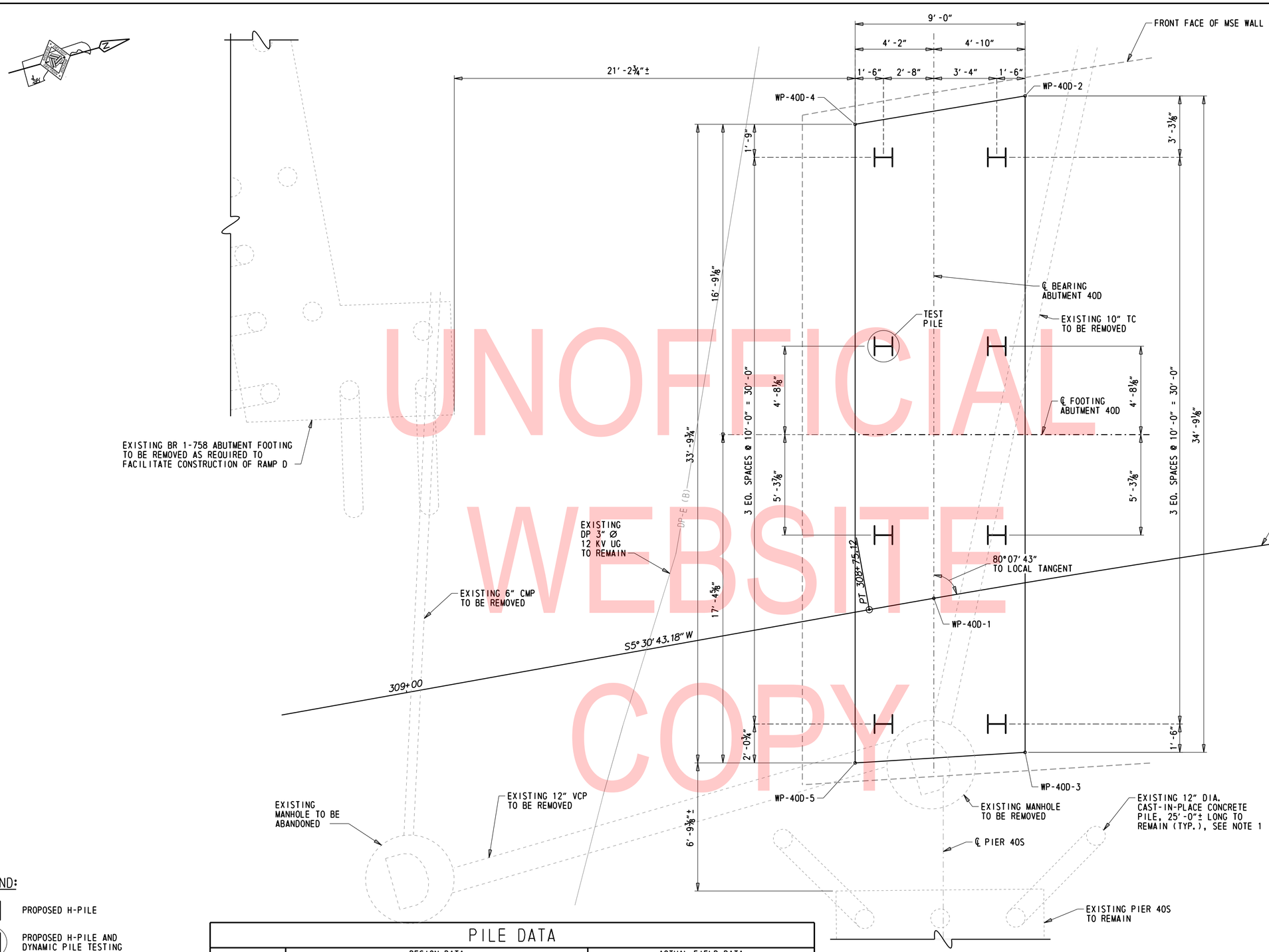

UNOFFICIAL WEBSITE COPY

PILE LAYOUT PLAN

⅜" = 1'-0"

NOTES:

1. EXISTING PILE LAYOUT AND PILE TIP LOCATION SHOWN BASED ON EXISTING PLANS AND MAY NOT REFLECT ACTUAL LOCATION.
2. ALL PILES SHALL BE INSTALLED WITH PILE TIP PROTECTION (PILE SHOES) TO PREVENT PILE DAMAGE DURING DRIVING, SEE DETAIL ON DWG. PL-08.
3. STEEL H-PILES SHALL BE ASTM A572, GRADE 50.
4. THE HAMMER ENERGY RANGE TO INSTALL PILES TO TIP ELEVATIONS AND NOMINAL BEARING RESISTANCE IS ESTIMATED AT 40 TO 70 KIP-FEET.
5. FOR ADDITIONAL PILE NOTES, SEE PROJECT SPECIFIC PILE NOTES, GENERAL PILE NOTES AND STEEL PILE NOTES ON DWG. PL-08.
6. FOR SEQUENCE OF CONSTRUCTION FOR ABUTMENT 40D, SEE DWG. AB-01.
7. FOR WORKING POINT INFORMATION, SEE DWG. FT-02.

LEGEND:

- PROPOSED H-PILE
- PROPOSED H-PILE AND DYNAMIC PILE TESTING
- EXISTING 12" C.I.P. CONCRETE PILE
- EXISTING 12" C.I.P. CONCRETE PILE, BATTERED 1H:4V

PILE DATA

SUBSTRUCTURE UNIT	DESIGN DATA				ACTUAL FIELD DATA		
	PILE SIZE	MINIMUM TIP ELEVATION	ESTIMATED TIP ELEVATION	ESTIMATED PRODUCTION PILE LENGTH	MINIMUM TIP ELEVATION	AVERAGE TIP ELEVATION	MAXIMUM TIP ELEVATION
ABUTMENT 40D	HP12x53	17.0	3.0	54			

ADDENDA / REVISIONS		SCALE AS NOTED	REHABILITATION OF I-95, 2ND STREET ON-RAMP IMPROVEMENTS	CONTRACT T201907402	BRIDGE NO. 1 748S 059	PILE LAYOUT PLAN ABUTMENT 40D	PL-07
				COUNTY NEW CASTLE	DESIGNED BY: D. NIZAMOFF		SECTION WRA
					CHECKED BY: W. GESCHREI		SHEET NO. 53

N:\31987-004\Contract_Ramp_D\CADD\Bridge\BRI-748S_PL07.dgn
8/23/2019 4:30:35 PM

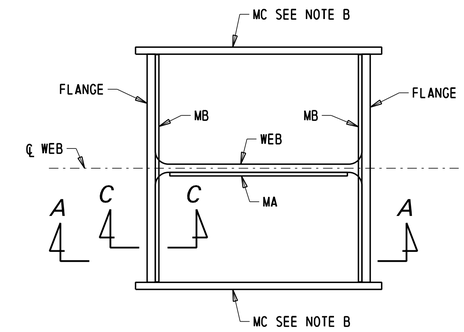

PLAN

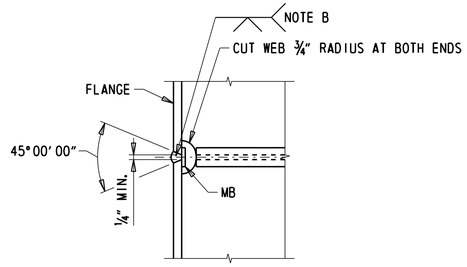

SECTION C-C
ALTERNATE FLANGE WELD

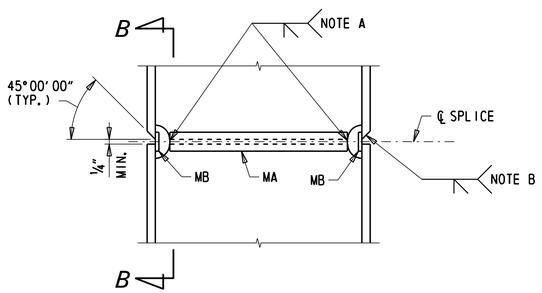

SECTION A-A

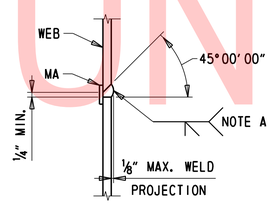

SECTION B-B

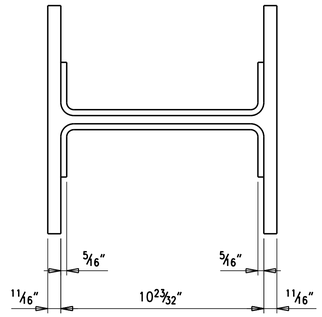

PLAN

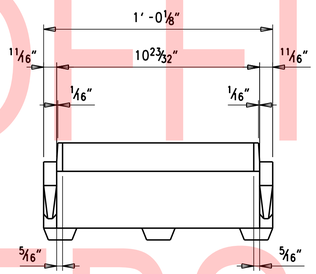

ELEVATION

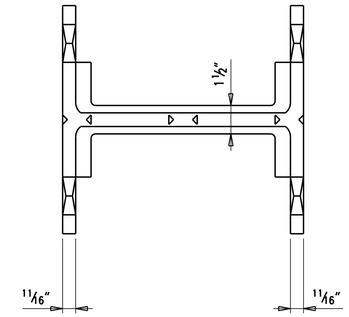

PLAN

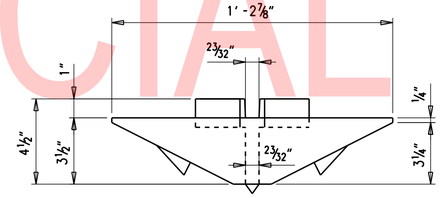

SIDE VIEW

12" H-PILE DRIVING SHOE

3"=1'-0"

SPLICE MATERIAL REQUIREMENTS		
HP 10"	HP 12"	HP 14"
1 BAR MA 1"x¼"x7¼"	1 BAR MA 1"x¼"x9⅜"	1 BAR MA 1"x¼"x1'-0"
2 BARS MB 1"x¼"x10"	2 BARS MB 1"x¼"x1'-0"	2 BARS MB 1"x¼"x1'-2½"
2 BARS MC 3"x⅜"x11"	2 BARS MC 3"x⅜"x1'-1"	2 BARS MC 3"x⅜"x1'-3"

NOTES:

NOTE A: END OF WELD SHALL BE SMOOTH AND FLUSH WITH WEB CUT, ¼" MIN. EFFECTIVE THROAT.

NOTE B: BAR MC SHALL BE TACK WELDED TO FLANGE AT SPLICE TO BACK UP END OF FLANGE WELD, REMOVE MC AFTER WELD IS COMPLETED. END OF WELD MUST BE SMOOTH AND FLUSH EDGE OF FLANGE. GRIND WELD SMOOTH WITH EDGE OF FLANGE IF PILE IS UNSUPPORTED IN WELD AREA SUCH AS IN AIR, WATER, OR SOFT MUD, ¼" MIN. EFFECTIVE THROAT.

NOTE C: LET WELDS COOL TO AIR TEMPERATURE BEFORE RESUMING THE PILE DRIVING.

NOTE D: NO PILE SPLICING SHALL BE ALLOWED ON ANY PORTION OF PILE THAT IS TO REMAIN EXPOSED OR TO BE ABOVE FINISHED GROUNDLINE IN COMPLETED STRUCTURE.

NOTE E: ALL SPLICE MATERIALS SHALL BE ASTMA 709, GRADE 50.

NOTE F: THE 0.25 INCH THICKNESS FOR MA AND MB BARS SPECIFIED IN THE 'SPLICE MATERIAL REQUIREMENTS' TABLE MAY BE REDUCED TO A MINIMUM OF 0.203 INCH THICKNESS

STEEL H-PILE SPLICE DETAILS

3"=1'-0"

PROJECT SPECIFIC PILE NOTES:

1. PILE TYPE:
   THIS PROJECT SHALL UTILIZE HP12x53 PILES CONFORMING TO ASTM A 709, GRADE 50.
2. ESTIMATED PRODUCTION PILE LENGTH VARIES BETWEEN SUBSTRUCTURE UNITS, SEE PILE INSTALLATION DATA TABLES ON PILE LAYOUT PLAN SHEETS FOR ESTIMATED PRODUCTION PILE LENGTH.
3. REQUIRED TEST PILE LENGTH IS EQUAL TO THE ESTIMATED PRODUCTION PILE LENGTH.
4. ALL PILES SHALL BE DRIVEN TO A NOMINAL BEARING RESISTANCE OF 385 KIPS. THE NOMINAL BEARING RESISTANCE PROVIDES A FACTORED BEARING RESISTANCE OF 250 KIPS USING A RESISTANCE FACTOR OF 0.65.
5. REFER TO THE PILE INSTALLATION DATA TABLE FOR MINIMUM TIP ELEVATION.

GENERAL PILE NOTES:

1. FOR MORE INFORMATION REGARDING PILE DRIVING, INSTALLATION, MATERIALS, AND FABRICATION, REFER TO SECTION 605 - DRIVEN PILES OF THE STANDARD SPECIFICATIONS.
2. EACH TEST PILE SHALL BE DYNAMICALLY TESTED BY THE CONTRACTOR IN ACCORDANCE WITH ITEM #605201 - DYNAMIC PILE TESTING BY CONTRACTOR. THE QUANTITY FOR DYNAMIC PILE TESTING SHALL INCLUDE ONE FOR THE INITIAL DRIVE AND ONE FOR THE RE-STRIKE OF EACH TEST PILE. THE NEED TO RE-STRIKE EITHER A TEST PILE OR A PRODUCTION PILE SHALL BE THE SOLE DECISION OF THE ENGINEER.
3. WAVE EQUATION ANALYSIS SHALL BE SUBMITTED BY THE CONTRACTOR FOR REVIEW BY THE ENGINEER (ELECTRONIC PREFERRED, OTHERWISE 8 COPIES MINIMUM).
4. ALL PILES WITHIN EACH SUBSTRUCTURE UNIT SHALL BE ORDERED THE SAME LENGTH (I.e. WITHOUT A LONGER TEST PILE). TEST PILES, AS NOTED, SHALL BE DRIVEN FIRST TO ESTABLISH DRIVING CRITERIA FOR THE OTHER PILES IN EACH SUBSTRUCTURE ELEMENT. AN ADDITIONAL 5' HAS BEEN ADDED TO THE DESIGN LENGTH OF EACH PILE AS A CONTINGENCY.

   FOR PILE INSTALLATION DATA TABLES, SEE RESPECTIVE PILE LAYOUT PLAN SHEET ON DWGS. PL-01 THROUGH PL-07.

STEEL H-PILE NOTES:

1. STEEL H-PILE SPLICE DETAILS APPLY ONLY TO HP 10", HP 12", AND HP 14" PILES.
2. THE CONTRACTOR MAY CONSIDER USING ALTERNATE STEEL H-PILE SPLICE DETAILS. ALL ALTERNATE DETAILS FOR STEEL H-PILE SPLICING SHALL BE SUBMITTED TO THE DEPARTMENT FOR APPROVAL, HOWEVER THERE IS NO GUARANTEE THE ALTERNATE SPLICE DETAIL WILL BE ACCEPTED. THE DEPARTMENT OR ENGINEER MAY REJECT ANY ALTERNATE FOR ANY REASON. USE OF ALTERNATE SPLICE DETAILS SHALL BE AT NO ADDITIONAL COST TO THE DEPARTMENT.
3. ALL PILES SHALL BE INSTALLED WITH PILE TIP PROTECTION (PILE SHOES) TO PREVENT PILE DAMAGE DURING DRIVING. SEE DETAIL THIS SHEET.
4. THE CONTRACTOR MAY CONSIDER ALTERNATE PILE TIP PROTECTION (PILE SHOES) DETAILS. ALL ALTERNATE DETAILS FOR PILE TIP PROTECTION SHALL BE SUBMITTED TO THE DEPARTMENT FOR APPROVAL, HOWEVER THERE IS NO GUARANTEE THE ALTERNATE PILE TIP PROTECTION DETAIL WILL BE ACCEPTED. THE DEPARTMENT OR ENGINEER MAY REJECT ANY ALTERNATE FOR ANY REASON. USE OF ALTERNATE PILE TIP PROTECTION DETAILS SHALL BE AT NO ADDITIONAL COST TO THE DEPARTMENT.
5. PRIOR TO DRIVING PILES, THE CONTRACTOR SHALL PERFORM PRECONSTRUCTION SURVEY OF STRUCTURES ADJACENT TO ABUTMENT 40D. THE CONTRACTOR SHALL MONITOR THE SITE FOR VIBRATION DURING PILE DRIVING OPERATIONS IN ACCORDANCE WITH ITEM 604502 - PROTECTION OF EXISTING STRUCTURES. PAYMENT FOR PRECONSTRUCTION SURVEY WILL BE MADE UNDER ITEM 604502.

PILE DRIVING SHOE NOTES:

1. PILE SHOES SHALL CONFORM TO ASTM A27, GRADE 65-35. ALL FILLETS SHALL BE ⅜".
2. PILE SHOE TO BE WELDED TO PILE WITH A CONTINUOUS SINGLE BEVEL GROOVE WELD ALONG OUTSIDE FACE OF FLANGE. EXTERIOR FACE OF FLANGE TO BE CUT BEVELED AT 45°, PRIOR TO WELDING.
3. FOR EACH SHIPMENT OF PILE SHOES, A FOUNDRY CERTIFICATION VERIFYING MATERIAL MEETS THE SPECIFICATIONS IS REQUIRED.

SIZE OF PILE	SIZE OF 45 BEVEL	SIZE OF GROOVE WELD
12x53	¼"	5/16"

UNOFFICIAL WEBSITE COPY

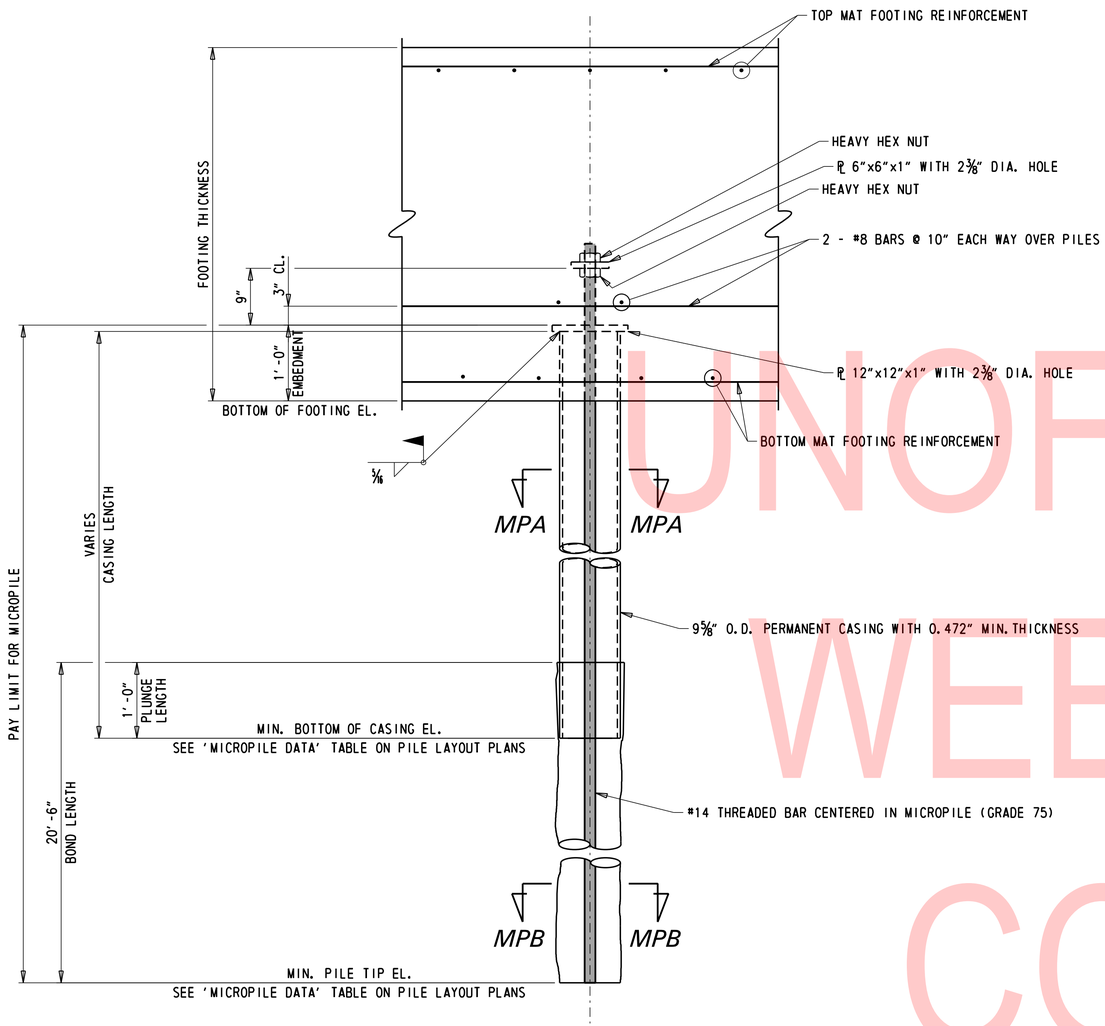

MICROPILE DETAIL

1" = 1'-0"

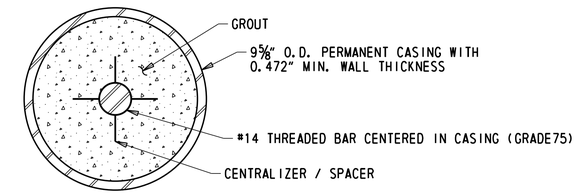

SECTION MPA - MPA

3" = 1'-0"

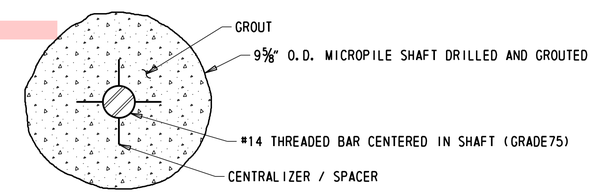

SECTION MPB - MPB

3" = 1'-0"

UNOFFICIAL WEBSITE COPY

NOTES:

1. MICROPILES SHALL BE CONSTRUCTED IN ACCORDANCE WITH THE REQUIREMENTS OF ITEM 605509 - MICROPILES.
2. SHOP DRAWINGS SHALL SHOW METHODS USED TO SECURE MICROPILE CENTER BAR IN CENTER OF SHAFT AND METHODS FOR SPLICING CENTER BAR DURING INSTALLATION.
3. MECHANICAL SPLICES IN THE MICROPILE CENTER BAR SHALL DEVELOP A MINIMUM OF 125% OF THE SPECIFIED YIELD STRENGTH OF THE BAR.
4. MICROPILE SIZE AND SECTION SHALL NOT VARY BETWEEN MICROPILES INSTALLED IN THE SAME PIER FOUNDATION.
5. PERMANENT MICROPILE CASINGS SHALL NOT HAVE JOINTS LOCATED WITHIN 5'-0" OF THE BOTTOM OF FOOTING.
6. ONE MICROPILE PROOF TEST SHALL BE PERFORMED AT EACH SUBSTRUCTURE UNIT IN ACCORDANCE WITH THE REQUIREMENTS OF ITEM 605510 - MICROPILE PROOF TEST.
7. ALL MICROPILES SHALL BE INSTALLED WITH 1 FOOT CASING PLUNGE LENGTH INTO BOND LENGTH.
8. MICROPILES ARE DESIGNED FOR A FACTORED AXIAL RESISTANCE OF 200 KIPS.

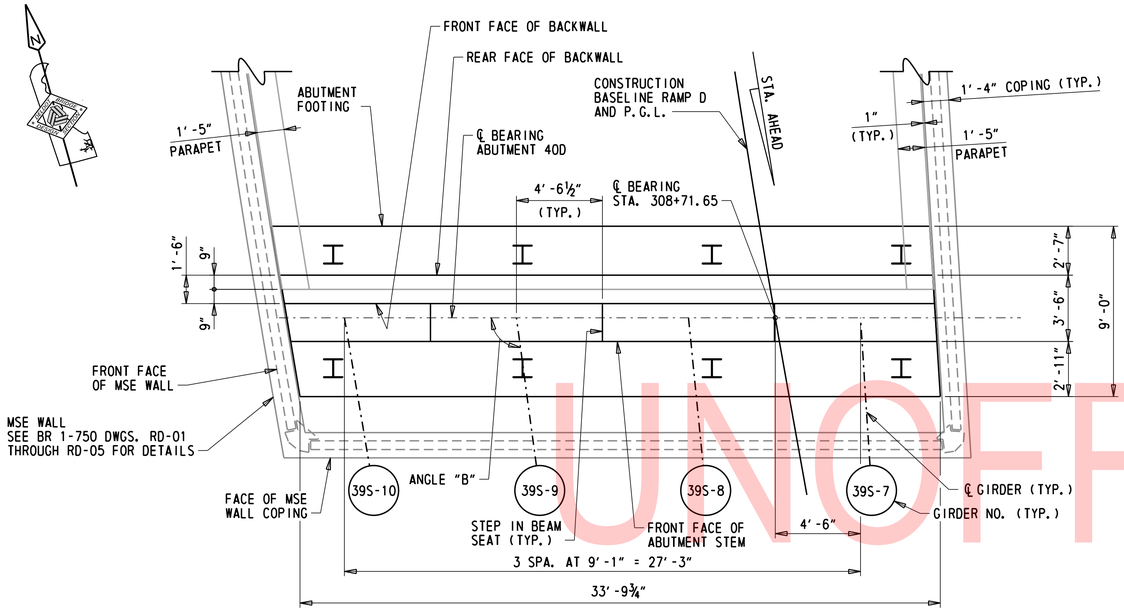

PLAN

¼" = 1'-0"

PROPOSED GIRDER	ANGLE "B"
39S-7	93°40'24"±
39S-8	95°41'26"±
39S-9	97°40'40"±
39S-10	99°37'50"±

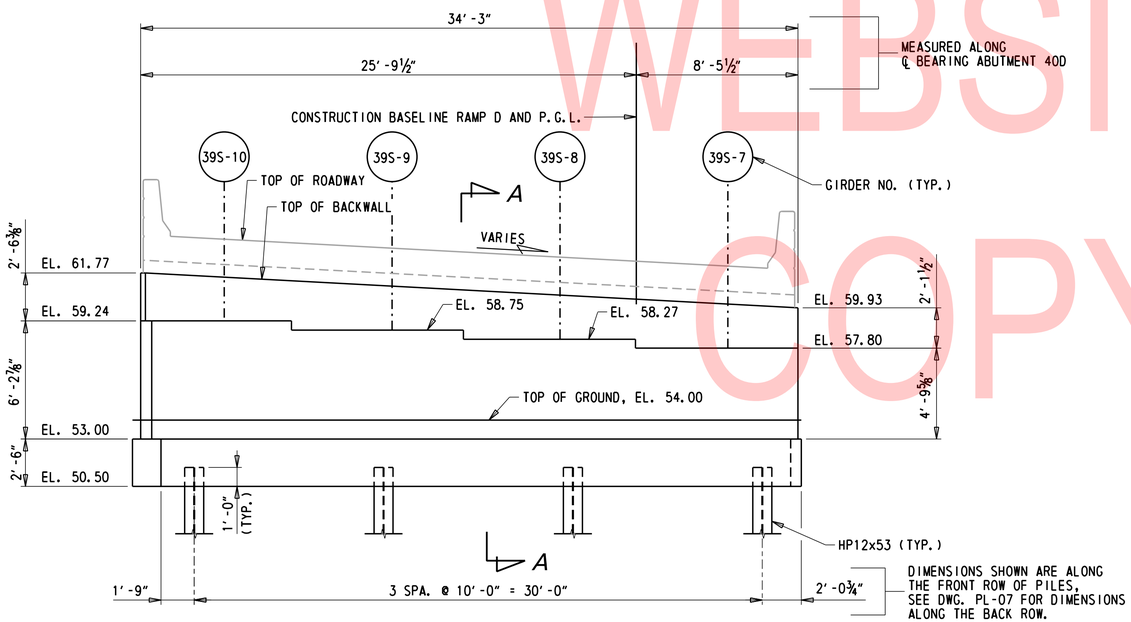

ELEVATION

¼" = 1'-0"

NOTE:

MSE WALL NOT SHOWN IN ELEVATION FOR CLARITY.

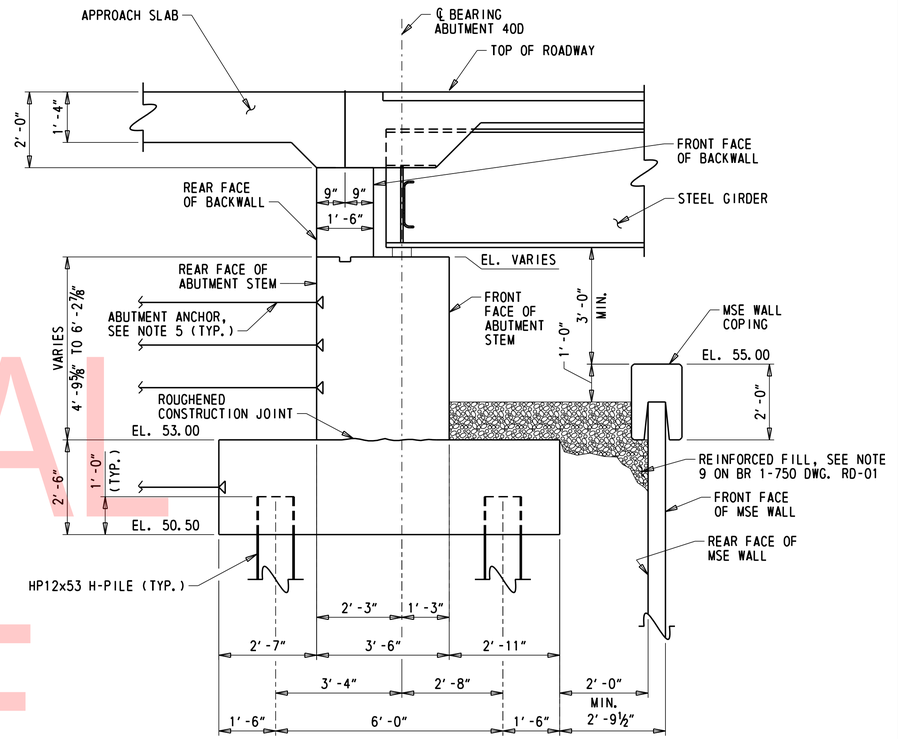

SECTION A -A

½" = 1'-0"

NOTES:

1. FOR FOOTING LAYOUT PLAN, SEE DWG. FT-02.
2. FOR PILE LAYOUT PLAN, SEE DWG. PL-07.
3. SILICONE-BASED ACRYLIC CONCRETE SEALER SHALL BE PLACED ON ALL EXPOSED CONCRETE SURFACES OF THE ABUTMENT, INCLUDING THE FACE OF THE BACKWALL. SILICONE-BASED ACRYLIC CONCRETE SEALER WILL BE PAID FOR UNDER ITEM NO. 613001.
4. THE ABUTMENT SHALL BE CONSTRUCTED WITH THE FOLLOWING SEQUENCE OF CONSTRUCTION:

   1. DRIVE PROPOSED PILES FOR ABUTMENT 40D.
   2. CONSTRUCT MSE WALL TO BOTTOM OF FOOTING ELEVATION.
   3. CONSTRUCT ABUTMENT 40D FOOTING AND STEM.
   4. COMPLETE MSE WALL INCLUDING CONCRETE COPING.
   5. COMPLETE BRIDGE INCLUDING GIRDERS, BACKWALL, DECK, AND APPROACH SLAB.

   NO ALTERNATE SEQUENCES OF CONSTRUCTION WILL BE PERMITTED FOR ABUTMENT 40D WITHOUT WRITTEN APPROVAL FROM THE ENGINEER.
5. PROVIDE ABUTMENT ANCHORS IN SELECT BACKFILL. FOR ABUTMENT ANCHOR DETAIL, SEE DWG. AB-02.

   ABUTMENT ANCHORS SHALL BE SPACED AND DESIGNED BY THE MSE WALL MANUFACTURER. ABUTMENT ANCHORS SHALL BE DESIGNED FOR EARTH PRESSURE, LIVE LOAD SURCHARGE AND A MINIMUM FACTORED HORIZONTAL FORCE OF 2.94 KIPS PER FOOT APPLIED AT THE CENTER OF BEARINGS.

   PAYMENT FOR ABUTMENT ANCHORS WILL BE INCIDENTAL TO ITEM 607000 - MECHANICALLY STABILIZED EARTH WALLS (SEE BR 1-750 PLANS).

UNOFFICIAL WEBSITE COPY

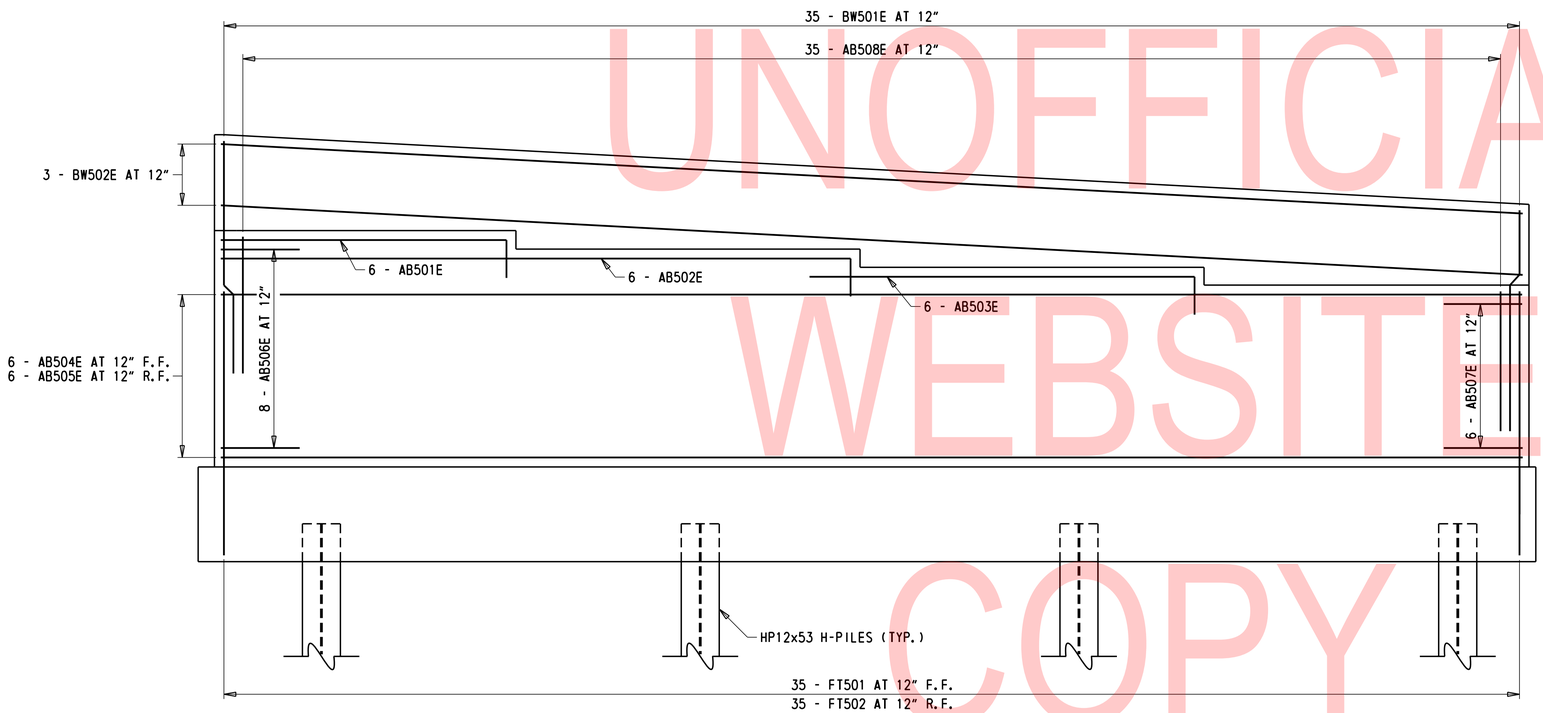

ABUTMENT 40D REINFORCEMENT ELEVATION

½" = 1'-0"

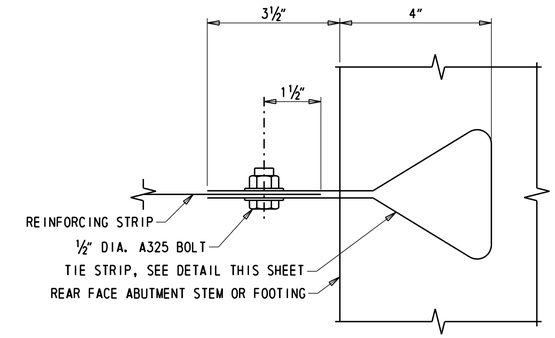

ABUTMENT ANCHOR DETAIL

NOT TO SCALE

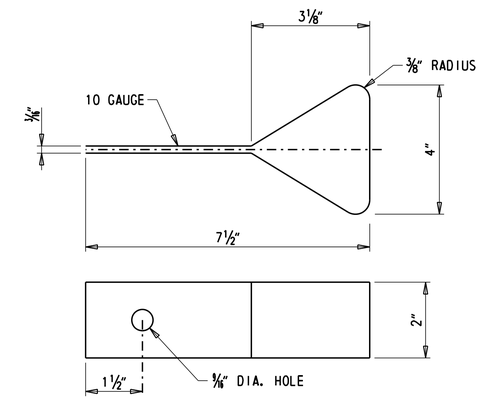

TIE STRIP DETAIL

NOT TO SCALE

ABUTMENT ANCHOR NOTES:

1. THE ABUTMENT ANCHOR SHOWN CONSISTING OF A TIE STRIP ATTACHED TO A REINFORCING STRIP MAY BE MODIFIED PER THE MSE WALL MANUFACTURER'S RECOMMENDATIONS. ANY CHANGES TO THE ABUTMENT ANCHOR DETAIL SHOWN SHALL BE SUBMITTED TO THE ENGINEER FOR APPROVAL.
2. ABUTMENT ANCHORS SHALL BE IN ACCORDANCE WITH THE MSE WALL MANUFACTURER'S RECOMMENDATIONS.

NOTES:

1. REINFORCING STEEL IN FOOTING NOT SHOWN FOR CLARITY. FOR ADDITIONAL INFORMATION, SEE DWG. AB-03 AND AB-04.

UNOFFICIAL WEBSITE COPY

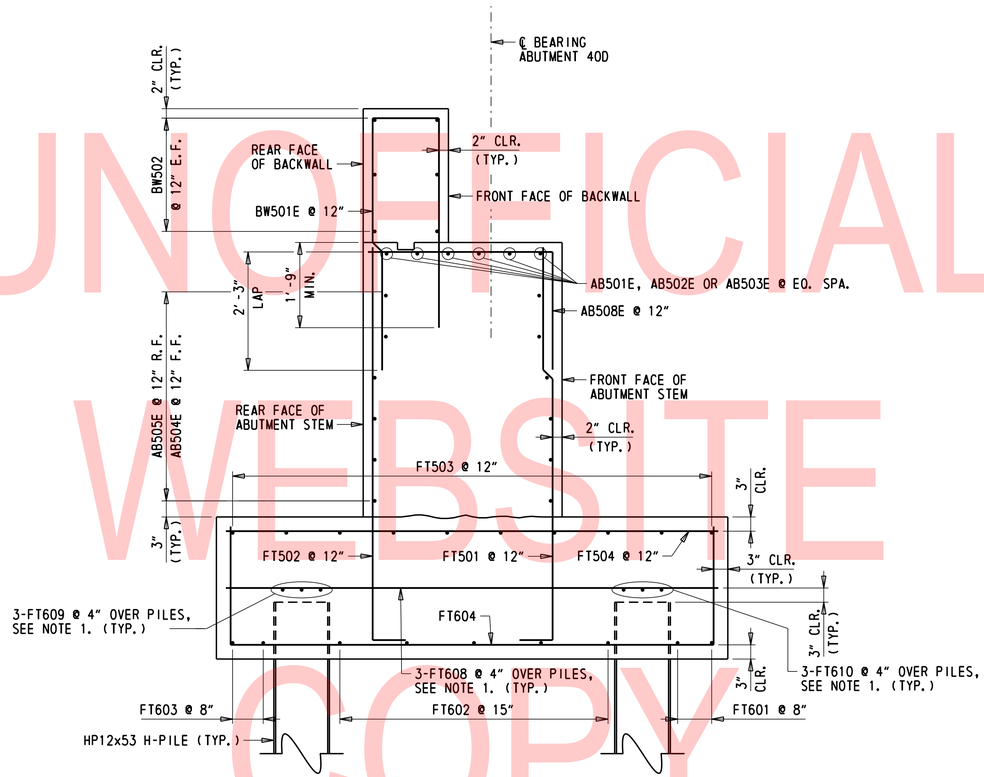

ABUTMENT 40D REINFORCEMENT TYPICAL SECTION

¾" = 1'-0"'

UNOFFICIAL WEBSITE COPY

NOTES:

1. FOR PILE LAYOUT, SEE DWG. PL-01.
2. FOR ADDITIONAL FOOTING REINFORCEMENT DETAILS, SEE DWG. AB-04.

N:\31987-004\Contract_Ramp_D\CADD\Bridge\BRI-748S_AB03.dgn
8/23/2019 4:30:50 PM

ADDENDA / REVISIONS	SCALE AS NOTED	REHABILITATION OF I-95, 2ND STREET ON-RAMP IMPROVEMENTS	CONTRACT T201907402	BRIDGE NO. 1 748S 059	ABUTMENT 40D TYPICAL SECTION	AB-03
			COUNTY NEW CASTLE	DESIGNED BY: D. NIZAMOFF		SECTION WRA
				CHECKED BY: W. GESCHREI		SHEET NO. 58

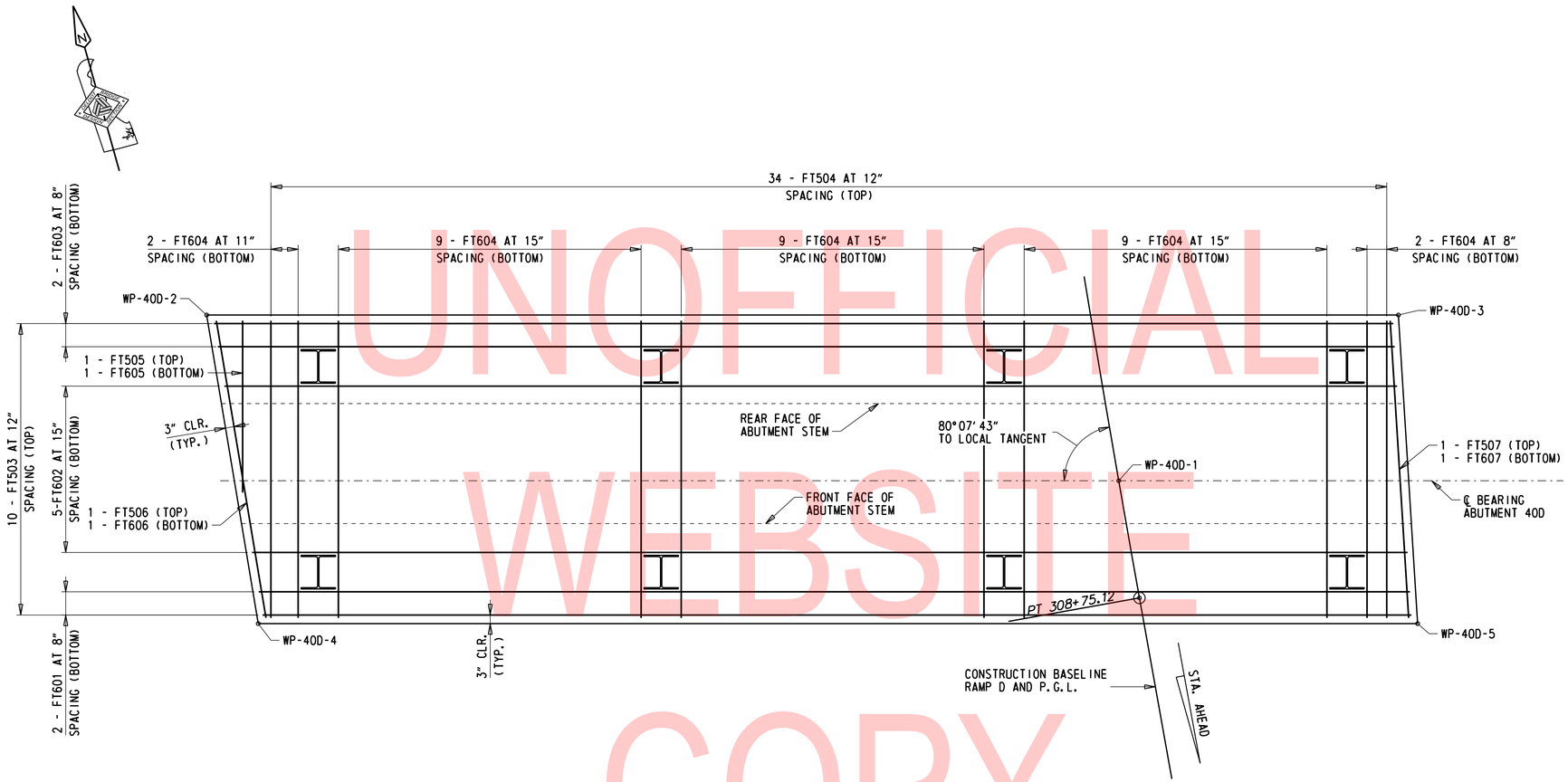

ABUTMENT 40D FOOTING REINFORCEMENT PLAN

½" = 1'-0"

UNOFFICIAL WEBSITE COPY

NOTES:

1. REINFORCEMENT OVER PILES NOT SHOWN FOR CLARITY. SEE DWGS. AB-03 AND PL-01 FOR ADDITIONAL INFORMATION.
2. SEE ABUTMENT REINFORCEMENT TYPICAL SECTION ON DWG. AB-03 FOR ADDITIONAL INFORMATION.
3. ALL REINFORCEMENT SHALL HAVE 1½" MINIMUM CLEAR TO PILES.

ADDENDA / REVISIONS	SCALE AS NOTED	REHABILITATION OF I-95, 2ND STREET ON-RAMP IMPROVEMENTS	CONTRACT T201907402	BRIDGE NO. 1 748S 059	ABUTMENT 40D FOOTING REINFORCEMENT PLAN	AB-04
			COUNTY NEW CASTLE	DESIGNED BY: D. NIZAMOFF		SECTION WRA
				CHECKED BY: W. GESCHREI		SHEET NO. 59

h:\31987-094\Contract_Ramp_D\C40D\Bridge\BR1-748S_AB04.dgn
8/23/2019 4:30:51 PM

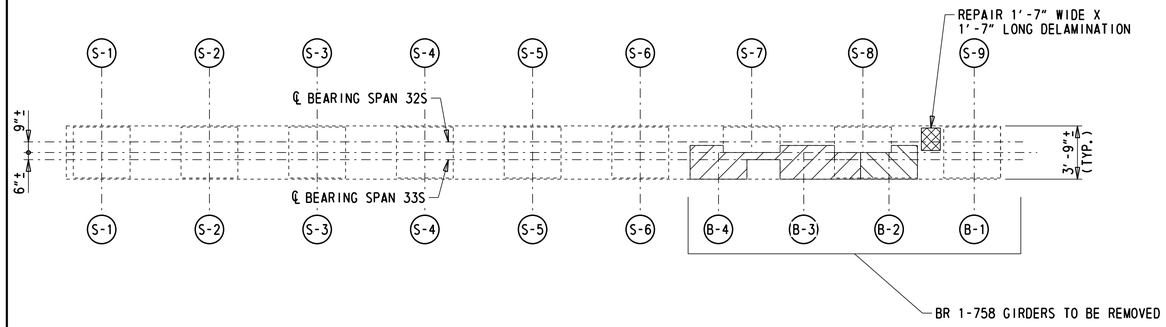

EXISTING PIER 33S - PLAN

3/16" = 1'-0"

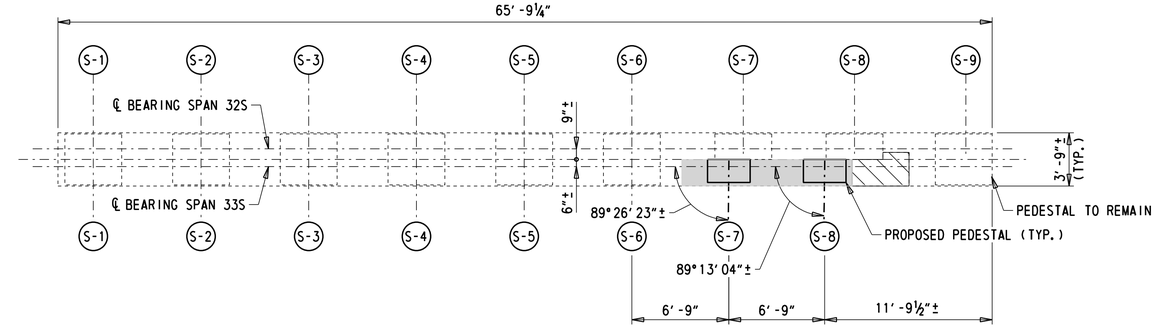

PROPOSED PIER 33S - PLAN

3/16" = 1'-0"

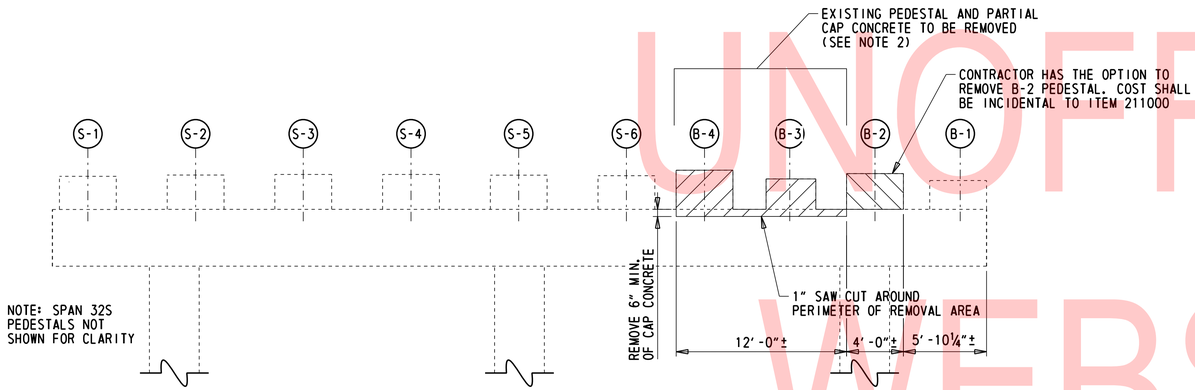

EXISTING PIER 33S - NORTH ELEVATION

3/16" = 1'-0"

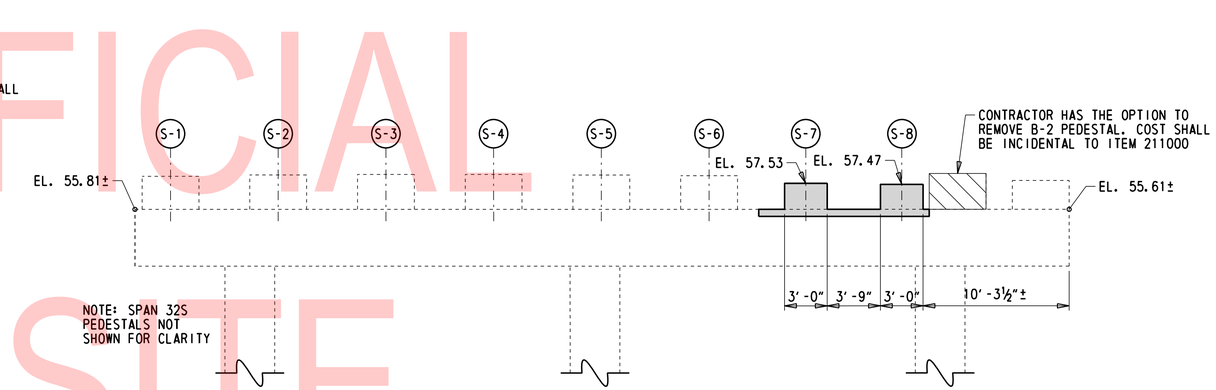

PROPOSED PIER 33S - NORTH ELEVATION

3/16" = 1'-0"

UNOFFICIAL WEBSITE COPY

NOTES:

1. PAYMENT FOR 1" SAW CUT WILL BE INCIDENTAL PAYMENT TO ITEM 21100.
2. EXISTING PIER CAP REINFORCEMENT BARS WITHIN LIMITS OF REMOVAL TO REMAIN AND SHALL BE CLEANED IN ACCORDANCE WITH SECTION 628.03(E)(7). BARS WITH CORROSION, BROKEN, OR WITH INADEQUATE BOND SHALL BE REPAIRED IN ACCORDANCE WITH SUBSECTION 628.03(E)(7). PAYMENT FOR THIS WORK WILL BE INCIDENTAL TO ITEM 211000 - REMOVAL OF STRUCTURES AND OBSTRUCTIONS.

LEGEND:

- LIMITS OF REMOVAL (ITEM 21100)
- OPTIONAL LIMITS OF REMOVAL (ITEM 211000)
- DEEP SPALL REPAIR
- CLASS A CONCRETE

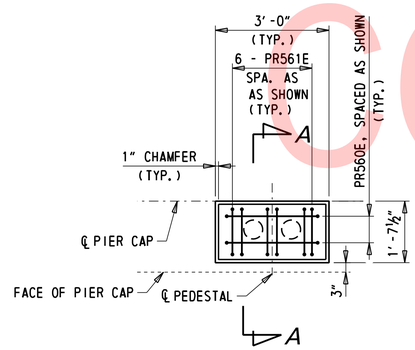

PLAN

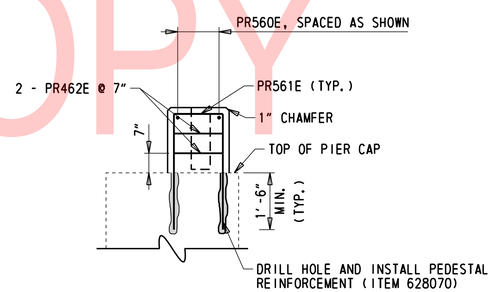

SECTION A-A

PEDESTAL REINFORCEMENT

½" = 1'-0"

CONCRETE REPAIR QUANTITIES				
PIER 33S				
REPAIR №	ITEM №	ITEM TITLE	UNIT	QUANTITY
37	628041	DEEP SPALL REPAIR	CF	1

ADDENDA / REVISIONS	SCALE AS NOTED	REHABILITATION OF I-95, 2ND STREET ON-RAMP IMPROVEMENTS	CONTRACT T201907402	BRIDGE NO. 1 748S 059	PIER 33S PEDESTAL RECONSTRUCTION AND REPAIR DETAILS	PR-01
			COUNTY NEW CASTLE	DESIGNED BY: D. NIZAMOFF		SECTION WRA
				CHECKED BY: W. GESCHREI		SHEET NO. 60

N:\31987-004\Contract_Ramp_D\CADD\Bridge\BR1-748S_PR33S.dgn
8/23/2019 4:30:51 PM

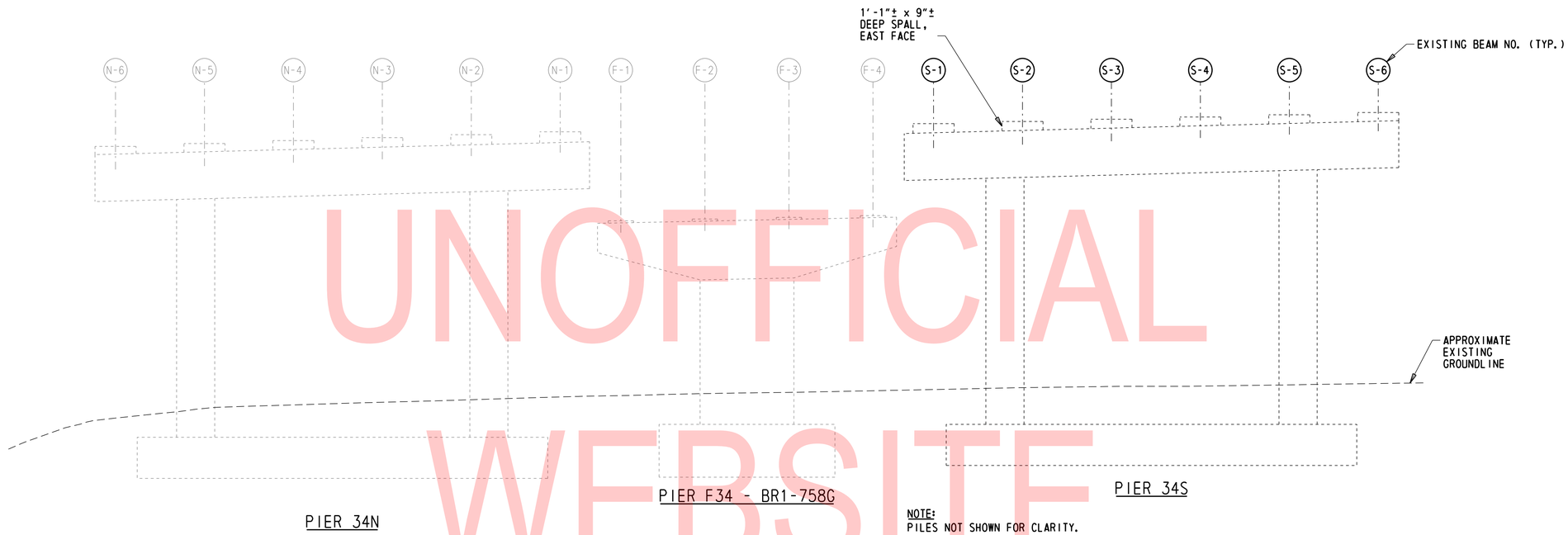

NOTE:
PILES NOT SHOWN FOR CLARITY.

PIER 34S - NORTH ELEVATION

1/16" = 1'-0"

UNOFFICIAL WEBSITE COPY

CONCRETE REPAIR QUANTITIES				
PIER 34S				
REPAIR Nº	ITEM Nº	ITEM TITLE	UNIT	QUANTITY
37	628041	DEEP SPALL REPAIR	CF	1

NOTE: QUANTITIES SHOWN ARE TOTAL PER PIER AND DO NOT INCLUDE CONTINGENT PERCENTAGE.

NOTES:

1. THE LOCATION AND QUANTITIES OF THE REPAIRS SHOWN ON THIS DRAWING ARE BASED ON INSPECTION FIELD NOTES (SEE NOTE 14 ON DWG. PN-01). PRIOR TO STARTING EACH REPAIR, THE LIMITS SHALL BE VERIFIED BY THE CONTRACTOR IN THE PRESENCE OF THE ENGINEER.
2. FOR CONCRETE REPAIR DETAILS, SEE DWG. PN-04.

LEGEND:

DEEP SPALL REPAIR

N:\31987-004\Contract_Ramp_D\CADD\Bridge\BR1-748S_PR34S.dgn
8/23/2019 4:30:52 PM

ADDENDA / REVISIONS	

SCALE AS NOTED

REHABILITATION OF I-95, 2ND STREET ON-RAMP IMPROVEMENTS

CONTRACT	BRIDGE NO.	1 748S 059
T201907402	DESIGNED BY: D. NIZAMOFF	
COUNTY		
NEW CASTLE	CHECKED BY: W. GESCHREI	

PIER 34S
CONCRETE REPAIR DETAILS

PR-02
SECTION
WRA
SHEET NO.
61

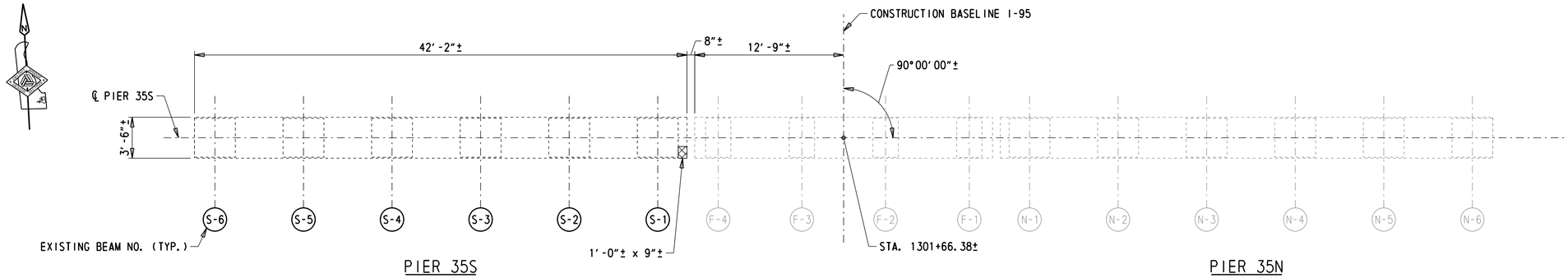

PIER 35S - PLAN VIEW

3/16" = 1'-0"

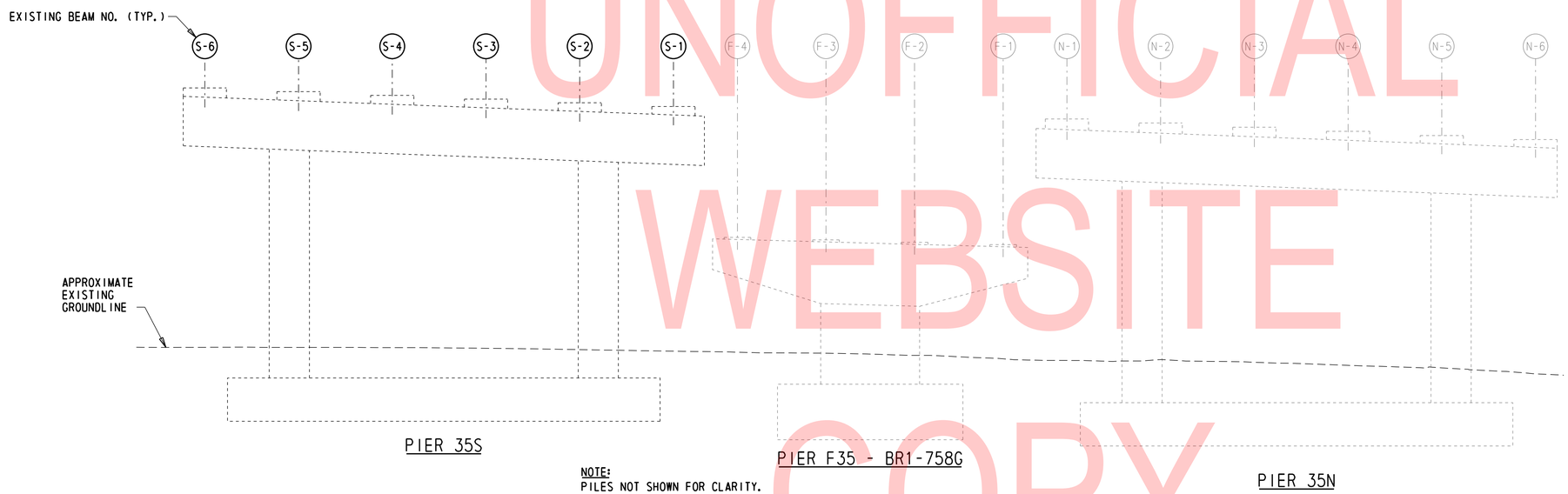

NOTE:
PILES NOT SHOWN FOR CLARITY.

PIER 35S - SOUTH ELEVATION

3/16" = 1'-0"

UNOFFICIAL WEBSITE COPY

LEGEND:

DEEP SPALL REPAIR

CONCRETE REPAIR QUANTITIES				
PIER 35S				
REPAIR №	ITEM №	ITEM TITLE	UNIT	QUANTITY
37	628041	DEEP SPALL REPAIR	CF	1

NOTE: QUANTITIES SHOWN ARE TOTAL PER PIER AND DO NOT INCLUDE CONTINGENT PERCENTAGE.

NOTES:

1. THE LOCATION AND QUANTITIES OF THE REPAIRS SHOWN ON THIS DRAWING ARE BASED ON INSPECTION FIELD NOTES (SEE NOTE 14 ON DWG. PN-01). PRIOR TO STARTING EACH REPAIR, THE LIMITS SHALL BE VERIFIED BY THE CONTRACTOR IN THE PRESENCE OF THE ENGINEER.
2. FOR CONCRETE REPAIR DETAILS, SEE DWG. PN-04.

N:\31987-004\Contract_Ramp_D\CADD\Bridge\BR1-748S_PR35S.dgn
8/23/2019 4:30:53 PM

ADDENDA / REVISIONS	SCALE AS NOTED	REHABILITATION OF I-95, 2ND STREET ON-RAMP IMPROVEMENTS	CONTRACT T201907402	BRIDGE NO. 1 748S 059	PIER 35S CONCRETE REPAIR DETAILS	PR-03
			COUNTY NEW CASTLE	DESIGNED BY: D. NIZAMOFF		SECTION WRA
				CHECKED BY: W. GESCHREI		SHEET NO. 62

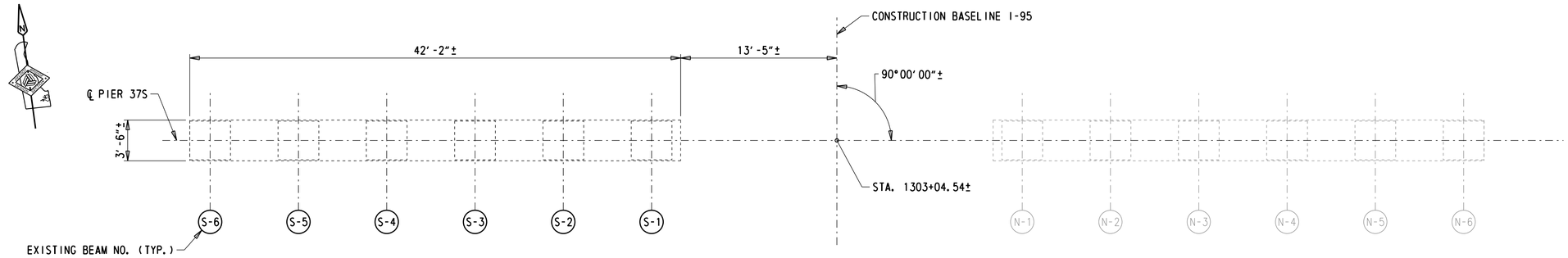

PIER 37S - PLAN VIEW

3/16" = 1'-0"

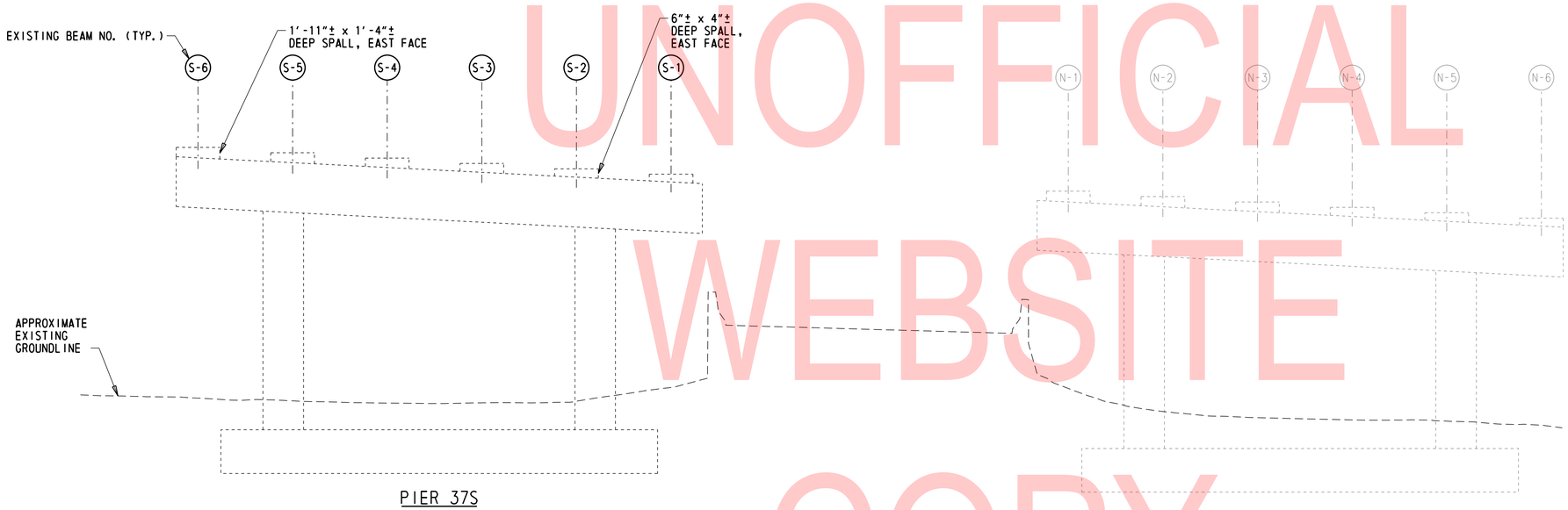

NOTE:
PILES NOT SHOWN FOR CLARITY.

PIER 37S - SOUTH ELEVATION

3/16" = 1'-0"

UNOFFICIAL WEBSITE COPY

LEGEND:

DEEP SPALL REPAIR

CONCRETE REPAIR QUANTITIES				
PIER 37S				
REPAIR №	ITEM №	ITEM TITLE	UNIT	QUANTITY
37	628041	DEEP SPALL REPAIR	CF	1

NOTE: QUANTITIES SHOWN ARE TOTAL PER PIER AND DO NOT INCLUDE CONTINGENT PERCENTAGE.

NOTES:

1. THE LOCATION AND QUANTITIES OF THE REPAIRS SHOWN ON THIS DRAWING ARE BASED ON INSPECTION FIELD NOTES (SEE NOTE 14 ON DWG. PN-01). PRIOR TO STARTING EACH REPAIR, THE LIMITS SHALL BE VERIFIED BY THE CONTRACTOR IN THE PRESENCE OF THE ENGINEER.
2. FOR CONCRETE REPAIR DETAILS, SEE DWG. PN-04.

N:\31987-004\Contract_Ramp_D\CADD\Bridge\BRI-748S_PR37S.dgn
8/23/2019 4:30:53 PM

ADDENDA / REVISIONS	SCALE AS NOTED	REHABILITATION OF I-95, 2ND STREET ON-RAMP IMPROVEMENTS	CONTRACT T201907402	BRIDGE NO. 1 748S 059	PIER 37S CONCRETE REPAIR DETAILS	PR-04
			COUNTY NEW CASTLE	DESIGNED BY: D. NIZAMOFF		SECTION WRA
				CHECKED BY: W. GESCHREI		SHEET NO. 63

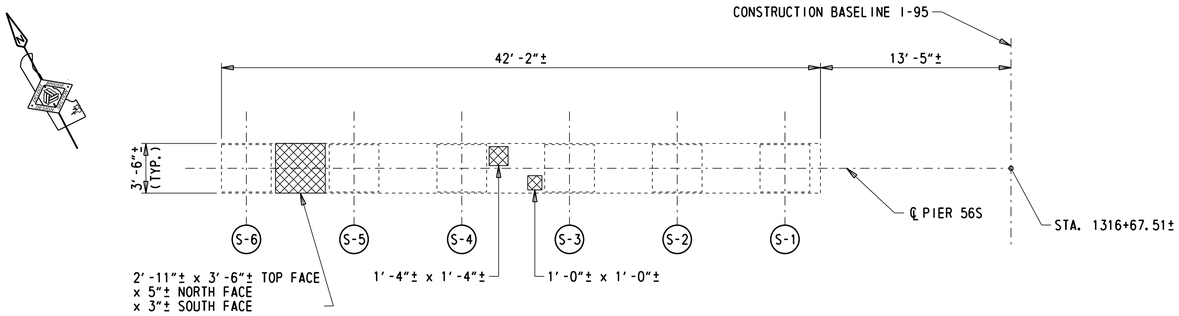

PIER 56 - PLAN VIEW

1/16" = 1'-0"

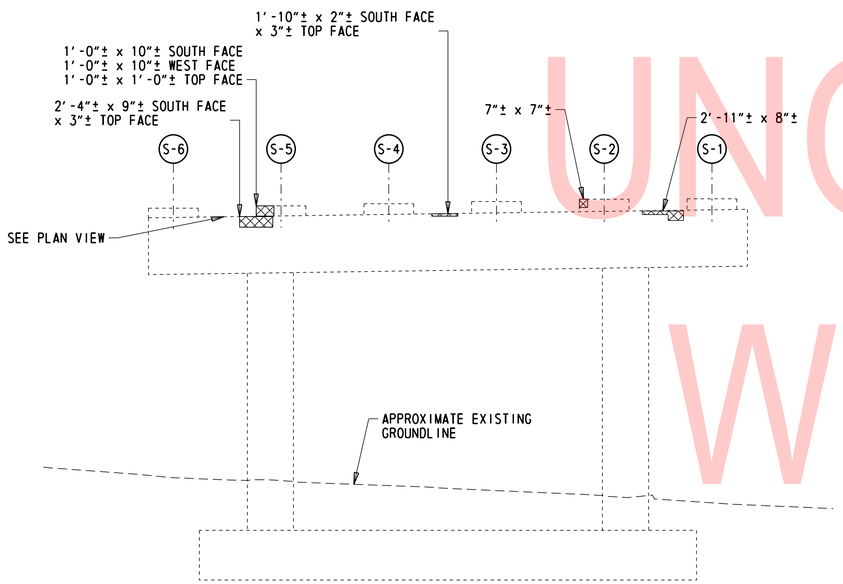

NOTE:
PILES NOT SHOWN FOR CLARITY.

PIER 56S - SOUTH ELEVATION

1/16" = 1'-0"

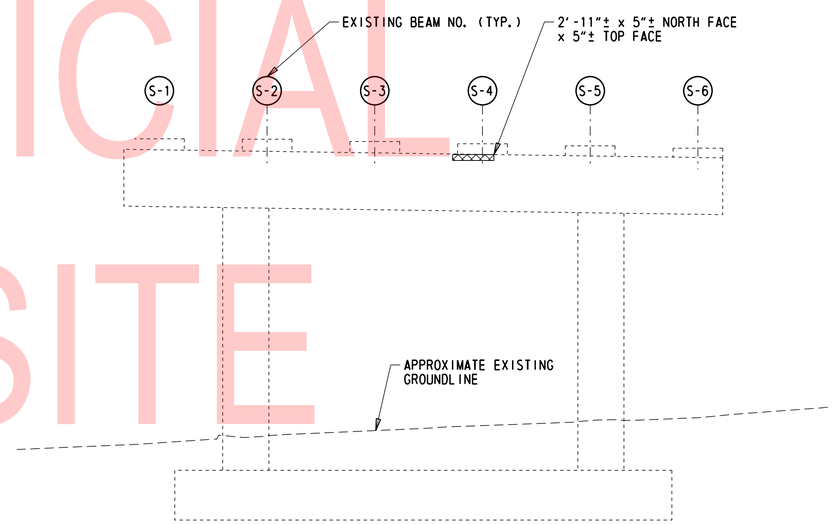

NOTE:
PILES NOT SHOWN FOR CLARITY.

PIER 56S - NORTH ELEVATION

1/16" = 1'-0"

UNOFFICIAL WEBSITE COPY

LEGEND:

DEEP SPALL REPAIR

CONCRETE REPAIR QUANTITIES				
PIER 56S				
REPAIR №	ITEM №	ITEM TITLE	UNIT	QUANTITY
37	628041	DEEP SPALL REPAIR	CF	8

NOTE: QUANTITIES SHOWN ARE TOTAL PER PIER AND DO NOT INCLUDE CONTINGENT PERCENTAGE.

NOTES:

1. THE LOCATION AND QUANTITIES OF THE REPAIRS SHOWN ON THIS DRAWING ARE BASED ON INSPECTION FIELD NOTES (SEE NOTE 14 ON DWG. PN-01). PRIOR TO STARTING EACH REPAIR, THE LIMITS SHALL BE VERIFIED BY THE CONTRACTOR IN THE PRESENCE OF THE ENGINEER.
2. FOR CONCRETE REPAIR DETAILS, SEE DWG. PN-04.

N:\31987-004\Contract_Ramp_D\CADD\Bridge\BR1-748S_PR56S.dgn
8/23/2019 4:30:54 PM

ADDENDA / REVISIONS	

SCALE AS NOTED

REHABILITATION OF I-95, 2ND STREET ON-RAMP IMPROVEMENTS

CONTRACT	BRIDGE NO.	1 748S 059
T201907402	DESIGNED BY: D. NIZAMOFF	
COUNTY	CHECKED BY: W. GESCHREI	
NEW CASTLE		

PIER 56S
CONCRETE REPAIR DETAILS

PR-05

SECTION
WRA
SHEET NO.
64

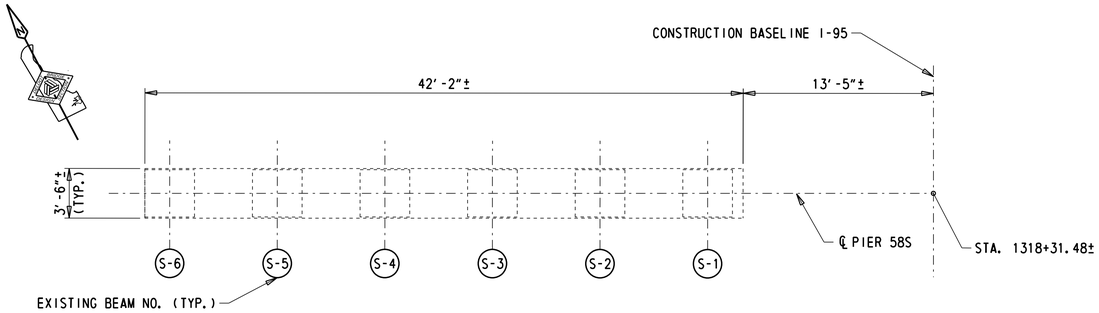

PIER 58S - PLAN VIEW

3/16" = 1'-0"

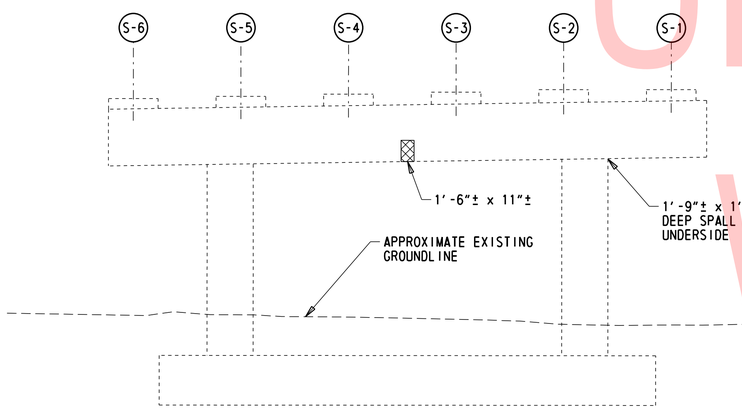

NOTE:
PILES NOT SHOWN FOR CLARITY.

PIER 58S - SOUTH ELEVATION

3/16" = 1'-0"

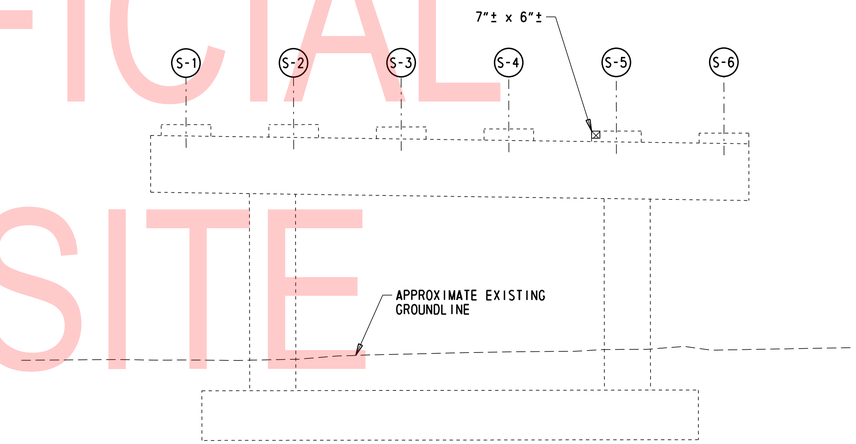

NOTE:
PILES NOT SHOWN FOR CLARITY.

PIER 58S - NORTH ELEVATION

3/16" = 1'-0"

UNOFFICIAL WEBSITE COPY

LEGEND:

DEEP SPALL REPAIR

CONCRETE REPAIR QUANTITIES				
PIER 58S				
REPAIR №	ITEM №	ITEM TITLE	UNIT	QUANTITY
37	628041	DEEP SPALL REPAIR	CF	2

NOTE: QUANTITIES SHOWN ARE TOTAL PER PIER AND DO NOT INCLUDE CONTINGENT PERCENTAGE.

NOTES:

1. THE LOCATION AND QUANTITIES OF THE REPAIRS SHOWN ON THIS DRAWING ARE BASED ON INSPECTION FIELD NOTES (SEE NOTE 14 ON DWG. PN-01). PRIOR TO STARTING EACH REPAIR, THE LIMITS SHALL BE VERIFIED BY THE CONTRACTOR IN THE PRESENCE OF THE ENGINEER.
2. FOR CONCRETE REPAIR DETAILS, SEE DWG. PN-04.

N:\31097-004\Contract_Ramp_D\CADD\Bridge\BR1-748S_PR58S.dgn
8/23/2019 4:30:55 PM

ADDENDA / REVISIONS	

SCALE AS NOTED

REHABILITATION OF I-95, 2ND STREET ON-RAMP IMPROVEMENTS

CONTRACT	BRIDGE NO.	1 748S 059
T201907402	DESIGNED BY: D. NIZAMOFF	
COUNTY		
NEW CASTLE	CHECKED BY: W. GESCHREI	

PIER 58S
CONCRETE REPAIR DETAILS

PR-06
SECTION WRA
SHEET NO. 65

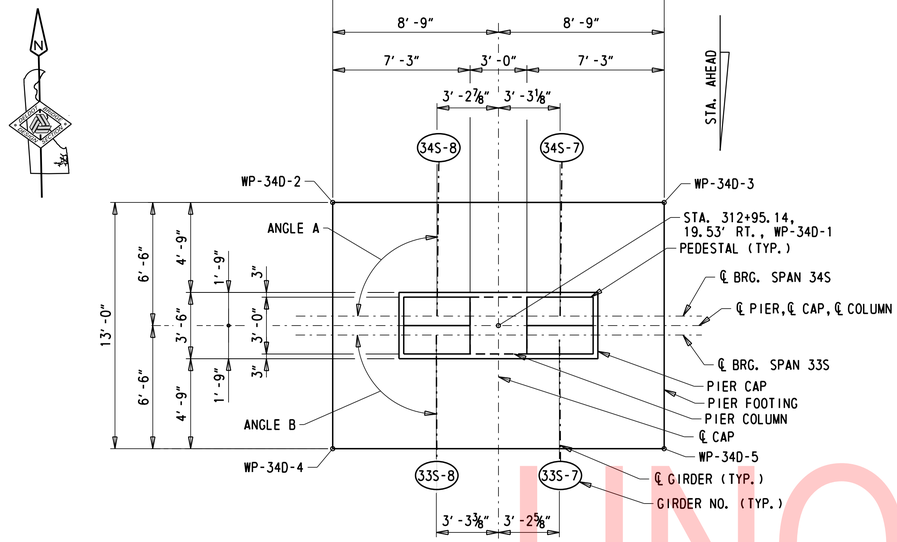

PLAN

¼" = 1'-0"

PROPOSED GIRDER	ANGLE "A"	ANGLE "B"
33S-7	-	90°25'47"
33S-8	-	90°12'28"
34S-7	90°38'50"	-
34S-8	90°38'52"	-

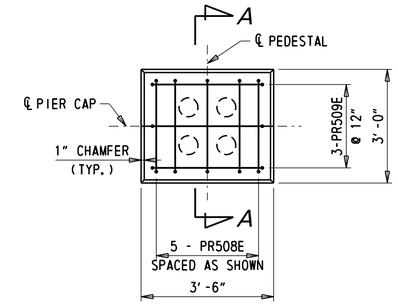

PLAN

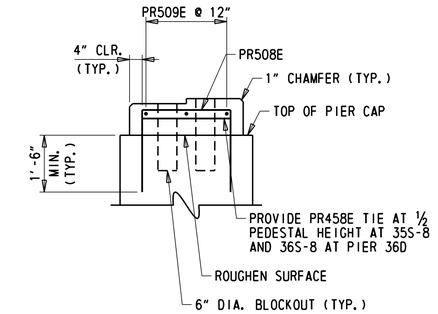

SECTION A-A

PEDESTAL REINFORCEMENT

PLAN

½" = 1'-0"

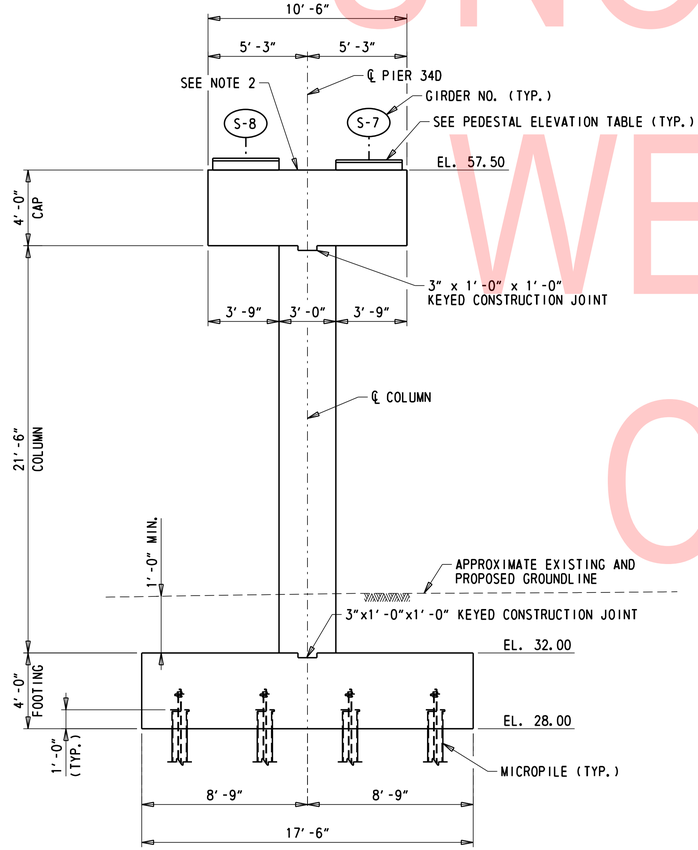

ELEVATION

¼" = 1'-0"

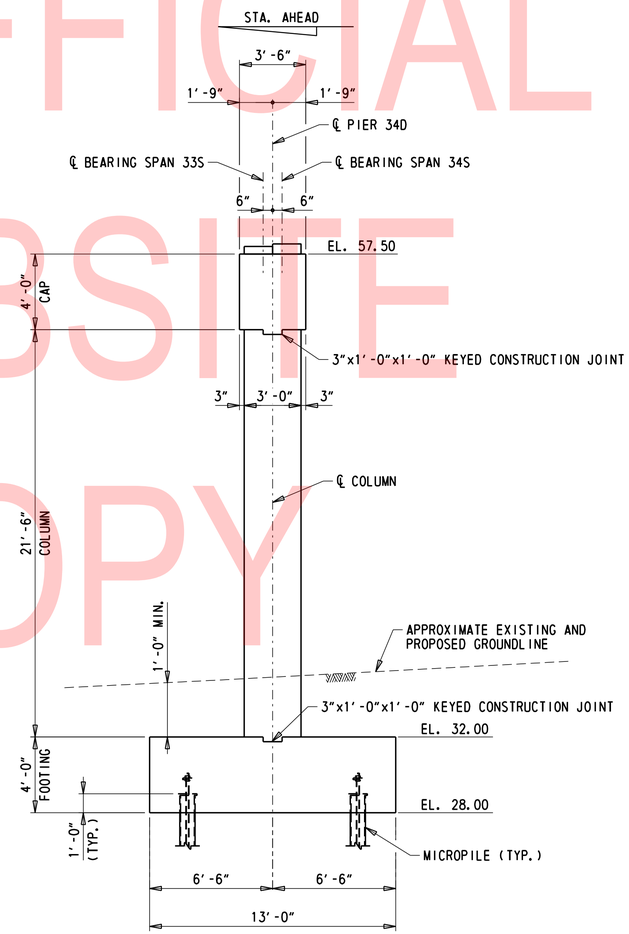

SECTION

¼" = 1'-0"

GIRDER NUMBER	PEDESTAL ELEVATION
33S-7	57.92
33S-8	58.00
34S-7	58.05
34S-8	58.14

NOTES:

1. PILES NOT SHOWN IN PLAN FOR CLARITY.
2. SLOPE TO DRAIN TOP OF CAP MIN. ¼" PER FOOT FROM CENTERLINE PIER TO FACE OF CAP. CAP DIMENSIONS SHOWN ARE MEASURED AT FACE OF CAP.
3. EPOXY CONCRETE SEALER SHALL BE PLACED ON TOP HORIZONTAL SURFACE OF CAP AND ENTIRE SURFACE OF BEARING PEDESTALS. EPOXY CONCRETE SEALER WILL BE PAID UNDER ITEM 613000. SILICONE-BASED ACRYLIC SEALER SHALL BE PLACED ON ALL REMAINING EXPOSED CONCRETE SURFACES. SILICONE-BASED ACRYLIC CONCRETE SEALER WILL BE PAID FOR UNDER ITEM 613001.
4. FOR FOOTING LAYOUT PLAN, SEE DWG. FT-01.
5. FOR PILE LAYOUT PLAN, SEE DWG. PL-01.
6. EXISTING PILES AND PORTION OF FOOTING TO REMAIN NOT SHOWN, SEE PILE LAYOUT PLAN FOR EXISTING FEATURES TO REMAIN.

LEGEND:

(XXS-8)
- GIRDER NO.
- SOUTHBOUND
- SPAN NO.

UNOFFICIAL WEBSITE COPY

N:\31987-004\Contract_Ramp_D\CADD\Bridge\BRI-748S_PR34D1.dgn
8/23/2019 4:30:56 PM

ADDENDA / REVISIONS	SCALE AS NOTED	REHABILITATION OF I-95, 2ND STREET ON-RAMP IMPROVEMENTS	CONTRACT T201907402	BRIDGE NO. 1 748S 059	PIER 34D PLAN, ELEVATION & SECTION	PR-07
			COUNTY NEW CASTLE	DESIGNED BY: D. NIZAMOFF		SECTION WRA
				CHECKED BY: W. GESCHREI		SHEET NO. 66

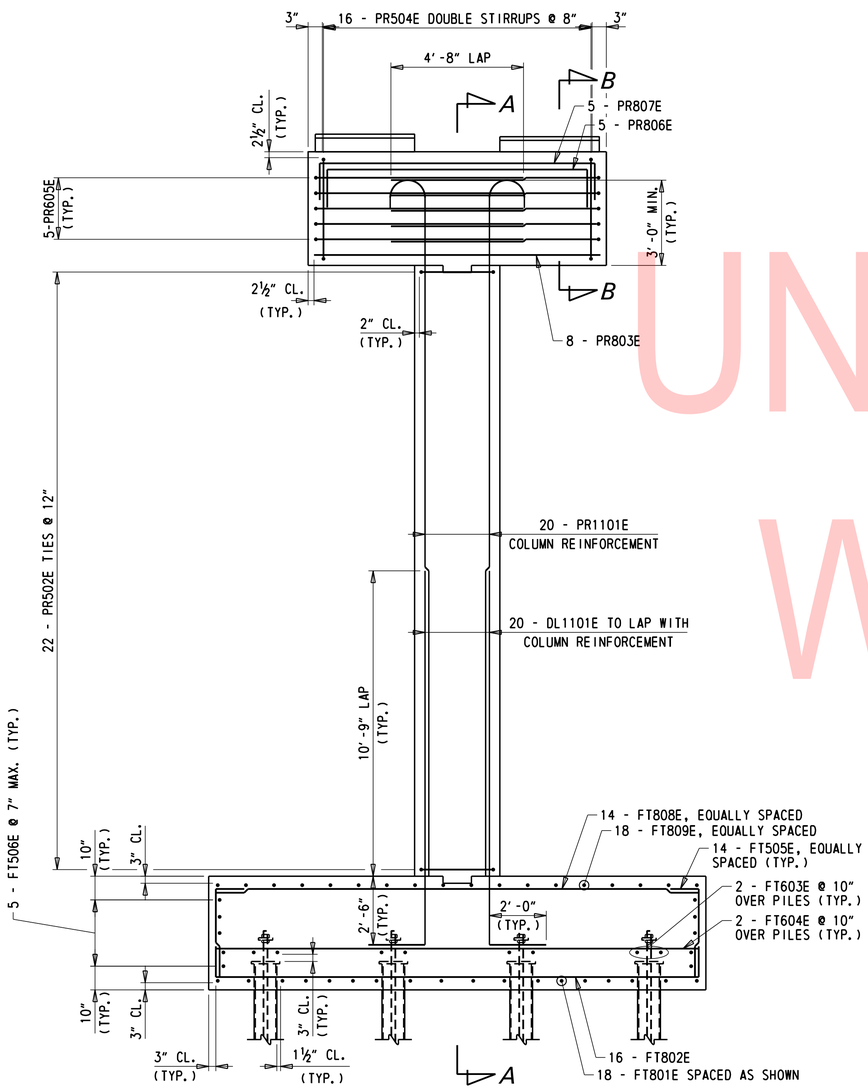

ELEVATION

⅜" = 1'-0"

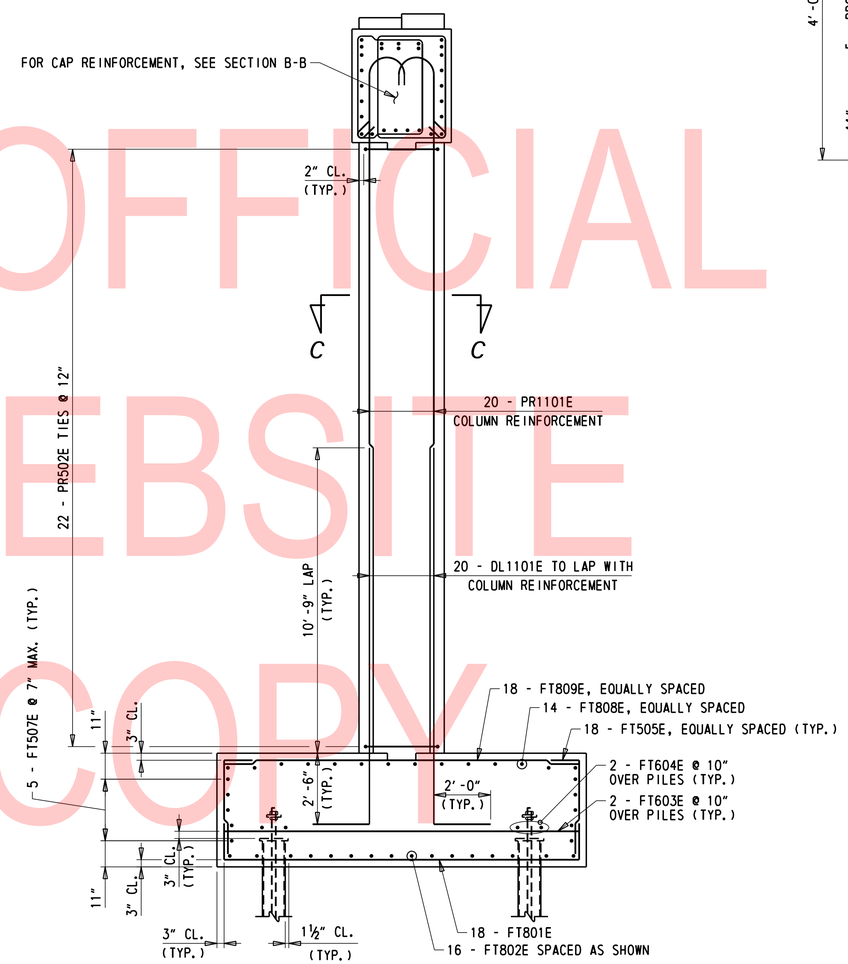

SECTION A-A

⅜" = 1'-0"

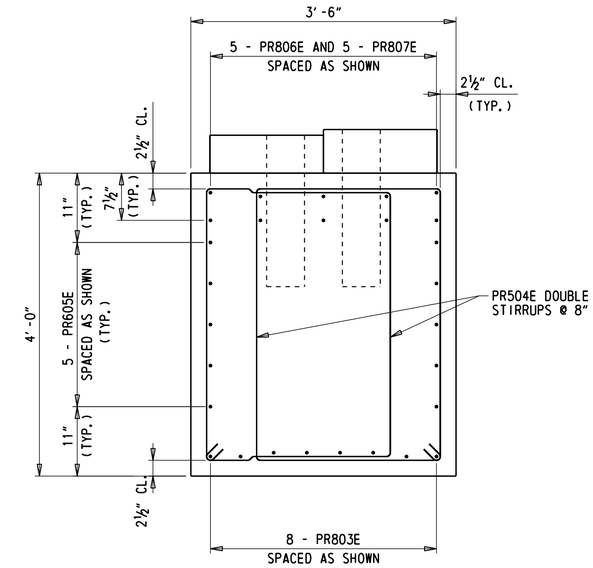

SECTION B-B

1" = 1'-0"

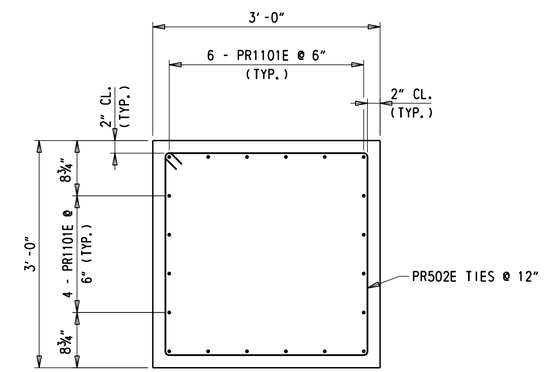

SECTION C-C

1" = 1'-0"

NOTES:

1. FOR PEDESTAL REINFORCEMENT DETAILS, SEE DWG. PR-07.

UNOFFICIAL WEBSITE COPY

N:\31987-004\Contract_Ramp_D\CADD\Bridge\BR1-748S_PR3402.dgn
8/23/2019 4:30:56 PM

ADDENDA / REVISIONS	SCALE AS NOTED	REHABILITATION OF I-95, 2ND STREET ON-RAMP IMPROVEMENTS	CONTRACT T201907402	BRIDGE NO. 1 748S 059	PIER 34D REINFORCEMENT DETAILS	PR-08
			COUNTY NEW CASTLE	DESIGNED BY: D. NIZAMOFF		SECTION WRA
				CHECKED BY: W. GESCHREI		SHEET NO. 67

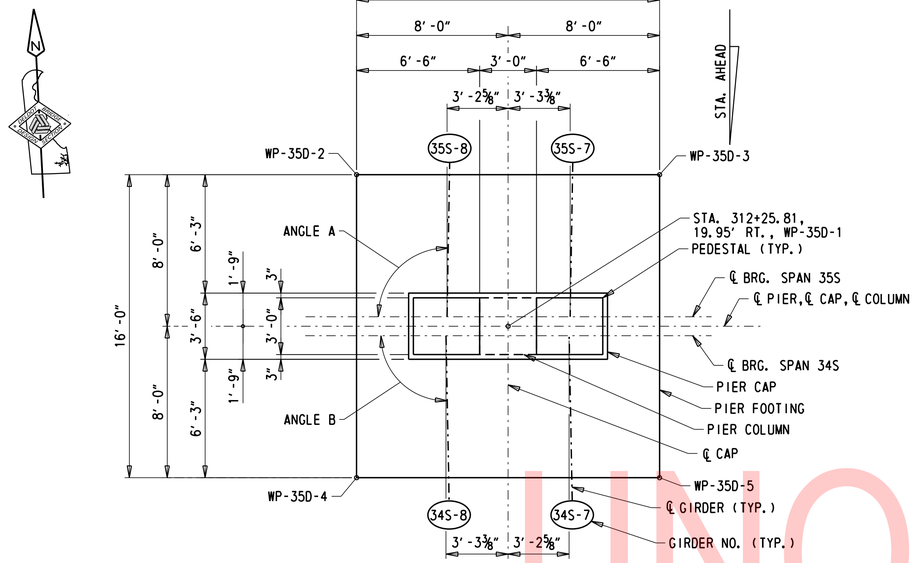

PLAN

¼" = 1'-0"

PROPOSED GIRDER	ANGLE "A"	ANGLE "B"
34S-7	-	91°04'04"
34S-8	-	91°04'02"
35S-7	90°57'39"	-
35S-8	90°57'39"	-

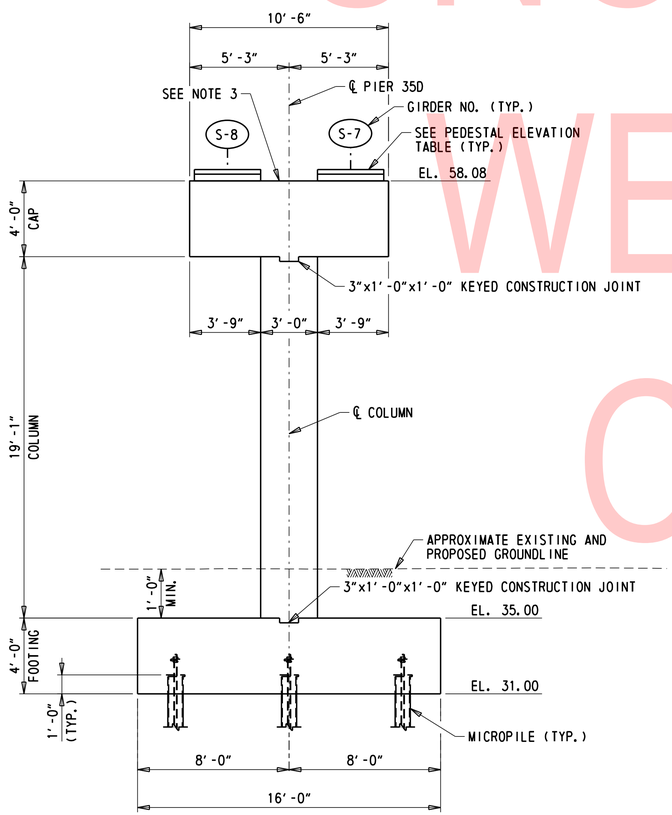

ELEVATION

¼" = 1'-0"

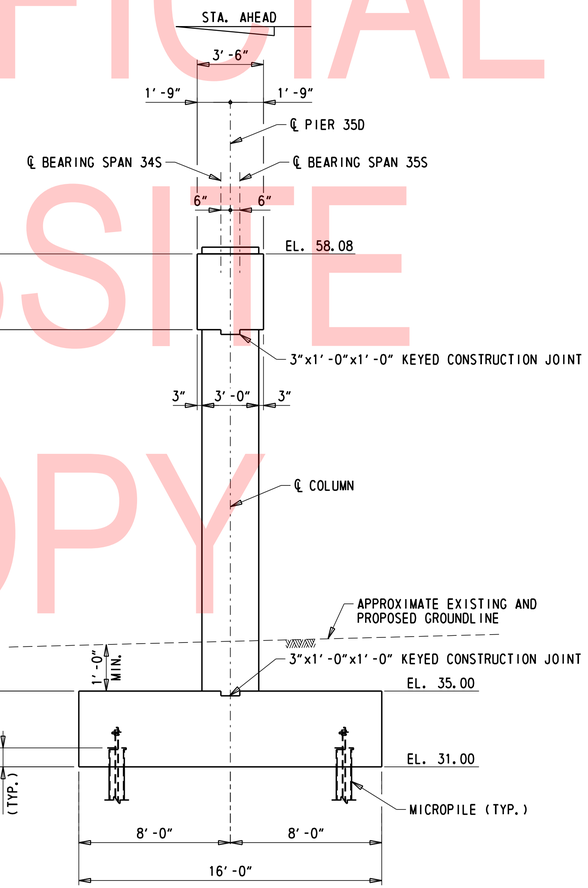

SECTION

¼" = 1'-0"

GIRDER NUMBER	PEDESTAL ELEVATION
34S-7	58.46
34S-8	58.70
35S-7	58.46
35S-8	58.70

NOTES:

1. PILES NOT SHOWN IN PLAN FOR CLARITY.
2. FOR CONCRETE PEDESTAL DETAILS, SEE DWG PR-102.
3. SLOPE TO DRAIN TOP OF CAP MIN. ¼" PER FOOT FROM CENTERLINE PIER TO FACE OF CAP. CAP DIMENSIONS SHOWN ARE MEASURED AT FACE OF CAP.
4. EPOXY CONCRETE SEALER SHALL BE PLACED ON TOP HORIZONTAL SURFACE OF CAP AND ENTIRE SURFACE OF BEARING PEDESTALS. EPOXY CONCRETE SEALER WILL BE PAID UNDER ITEM 613000. SILICONE-BASED ACRYLIC SEALER SHALL BE PLACED ON ALL REMAINING EXPOSED CONCRETE SURFACES. SILICONE-BASED ACRYLIC CONCRETE SEALER WILL BE PAID FOR UNDER ITEM 613001.
5. FOR FOOTING LAYOUT PLAN, SEE DWG. FT-01.
6. FOR PILE LAYOUT PLAN, SEE DWG. PL-02.
7. EXISTING PILES AND PORTION OF FOOTING TO REMAIN NOT SHOWN, SEE PILE LAYOUT PLAN FOR EXISTING FEATURES TO REMAIN.

LEGEND:

XXS-8
- GIRDER NO.
- SOUTHBOUND
- SPAN NO.

UNOFFICIAL WEBSITE COPY

ADDENDA / REVISIONS

SCALE AS NOTED

REHABILITATION OF I-95, 2ND STREET ON-RAMP IMPROVEMENTS

CONTRACT	BRIDGE NO.	1 748S 059
T201907402	DESIGNED BY: D. NIZAMOFF	
COUNTY		
NEW CASTLE	CHECKED BY: W. GESCHREI	

PIER 35D PLAN, ELEVATION & SECTION

PR-09
SECTION
WRA
SHEET NO.
68

N:\31987-004\Contract_Ramp_D\CADD\Bridge\BR1-748S_PR3501.dgn
8/23/2019 4:30:57 PM

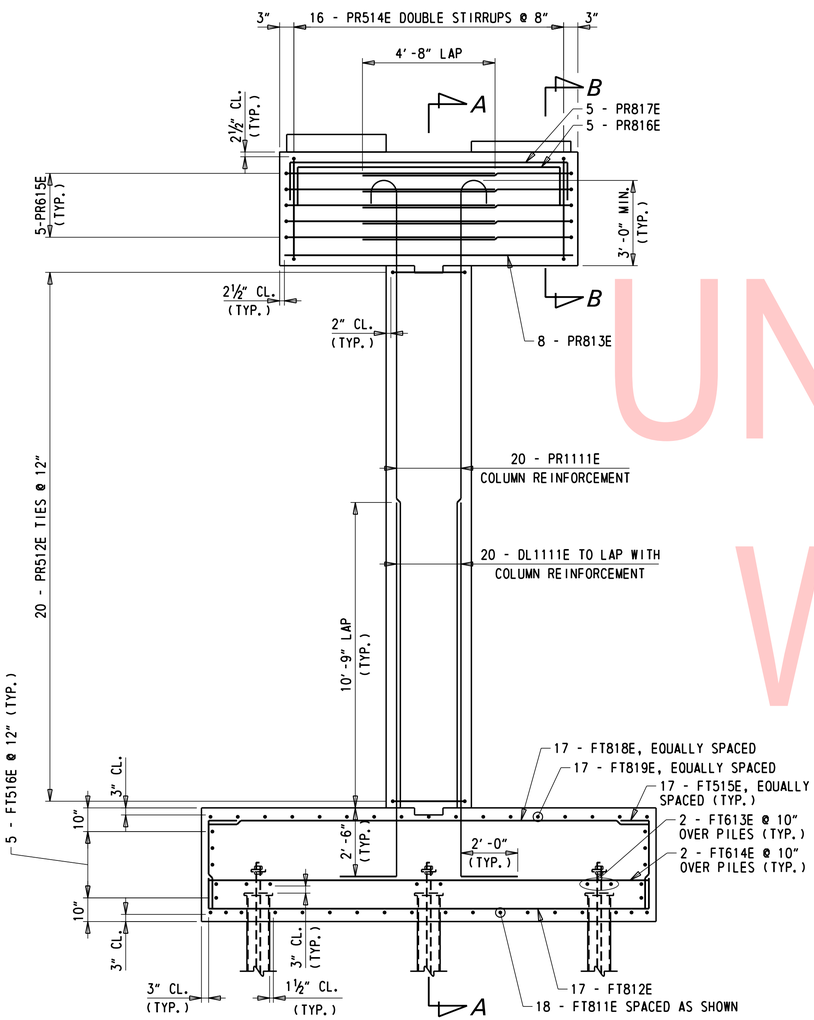

ELEVATION

⅜" = 1'-0"

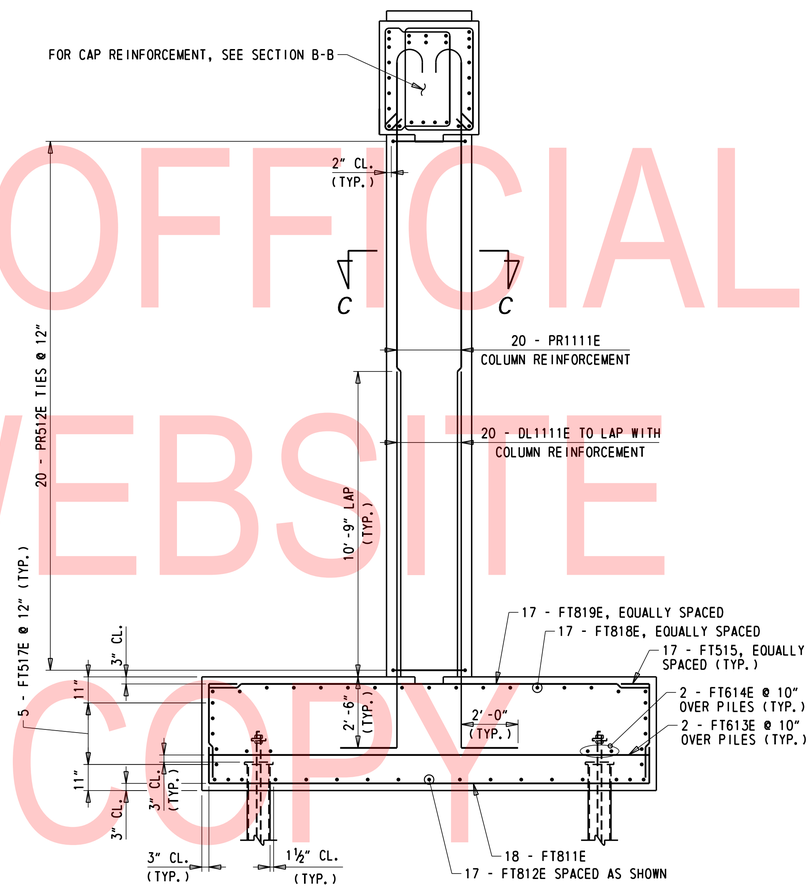

SECTION A-A

⅜" = 1'-0"

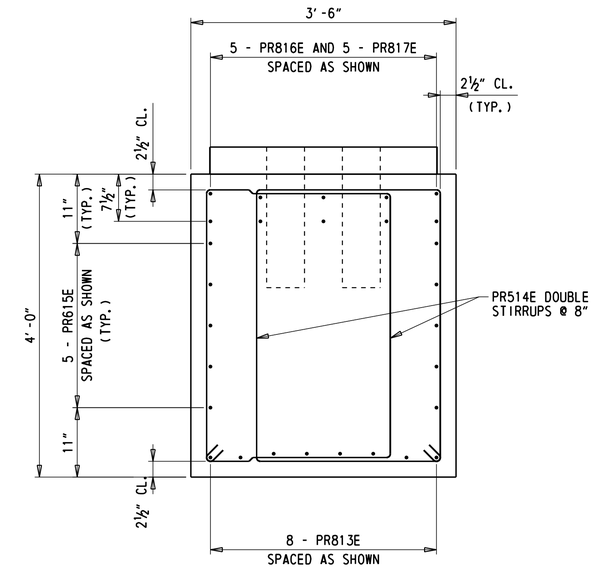

SECTION B-B

1" = 1'-0"

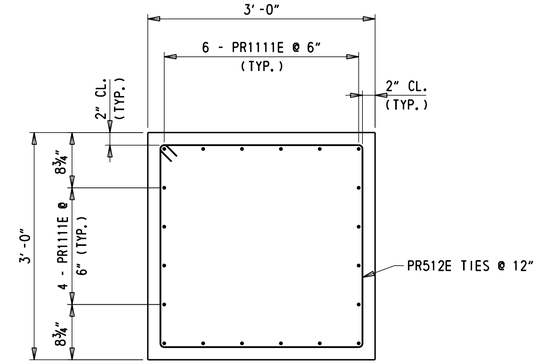

SECTION C-C

1" = 1'-0"

NOTES:

1. FOR PEDESTAL REINFORCEMENT DETAILS, SEE DWG. PR-07.

UNOFFICIAL WEBSITE COPY

N:\31987-004\Contract_Ramp_D\CADD\Bridge\BRI-7485_PR3502.dgn
8/23/2019 4:30:58 PM

ADDENDA / REVISIONS	SCALE AS NOTED	REHABILITATION OF I-95, 2ND STREET ON-RAMP IMPROVEMENTS	CONTRACT T201907402	BRIDGE NO. 1 748S 059	PIER 35D REINFORCEMENT DETAILS	PR-10
			COUNTY NEW CASTLE	DESIGNED BY: D. NIZAMOFF		SECTION WRA
				CHECKED BY: W. GESCHREI		SHEET NO. 69

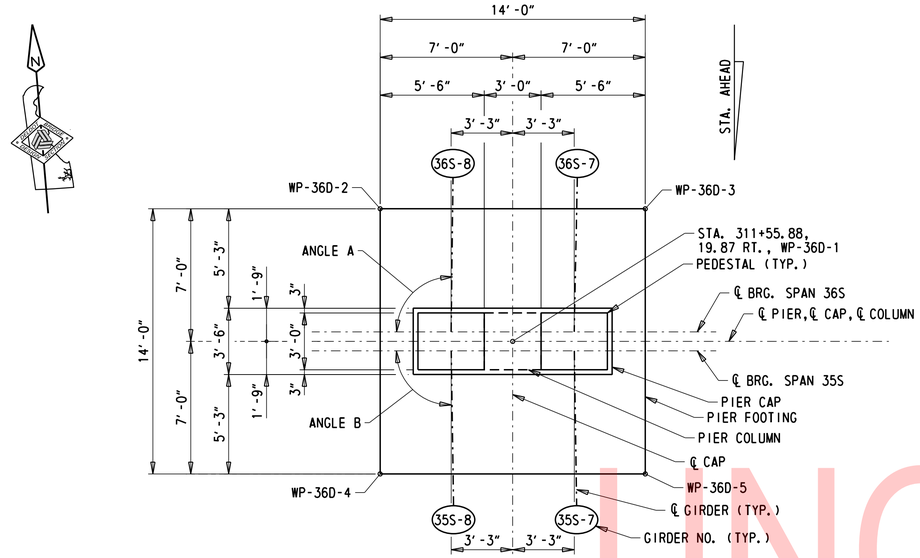

PLAN

¼" = 1'-0"

PROPOSED GIRDER	ANGLE "A"	ANGLE "B"
35S-7	-	90°51'35"
35S-8	-	90°51'35"
36S-7	91°09'12"	-
36S-8	90°41'25"	

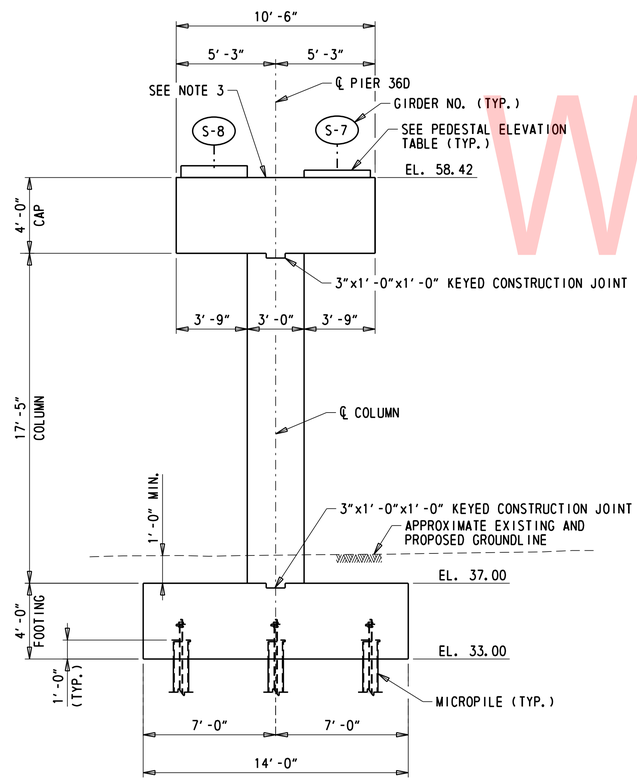

ELEVATION

¼" = 1'-0"

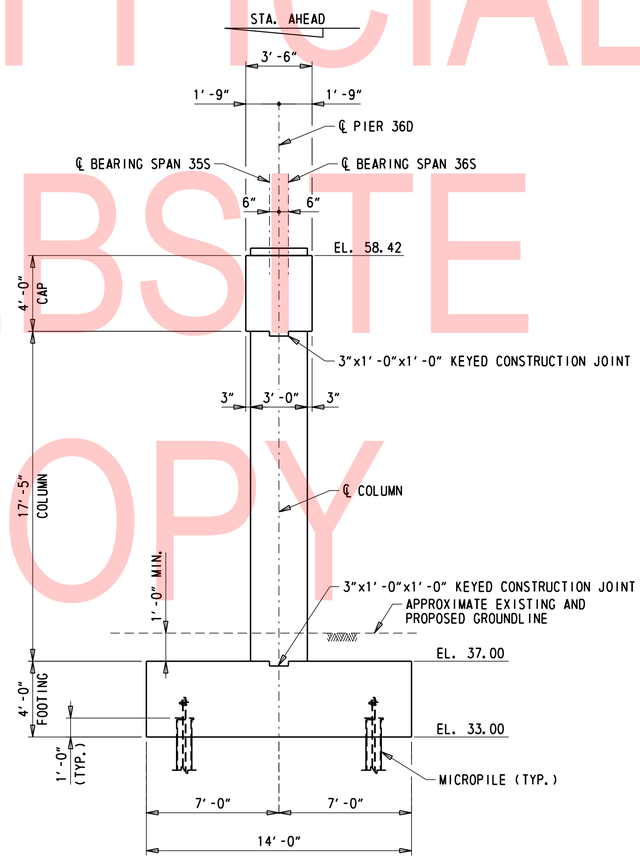

SECTION

¼" = 1'-0"

GIRDER NUMBER	PEDESTAL ELEVATION
35S-7	58.83
35S-8	59.11
36S-7	58.83
36S-8	59.11

NOTES:

1. PILES NOT SHOWN IN PLAN FOR CLARITY.
2. FOR CONCRETE PEDESTAL DETAILS, SEE DWG PR-102.
3. SLOPE TO DRAIN TOP OF CAP MIN. ¼" PER FOOT FROM CENTERLINE PIER TO FACE OF CAP. CAP DIMENSIONS ARE MEASURED AT FACE OF CAP.
4. EPOXY CONCRETE SEALER SHALL BE PLACED ON TOP HORIZONTAL SURFACE OF CAP AND ENTIRE SURFACE OF BEARING PEDESTALS. EPOXY CONCRETE SEALER WILL BE PAID UNDER ITEM 613000. SILICONE-BASED ACRYLIC SEALER SHALL BE PLACED ON ALL REMAINING EXPOSED CONCRETE SURFACES. SILICONE-BASED ACRYLIC CONCRETE SEALER WILL BE PAID FOR UNDER ITEM 613001.
5. FOR FOOTING LAYOUT PLAN, SEE DWG. FT-01.
6. FOR PILE LAYOUT PLAN, SEE DWG. PL-03.
7. EXISTING PILES AND PORTION OF FOOTING TO REMAIN NOT SHOWN, SEE PILE LAYOUT PLAN FOR EXISTING FEATURES TO REMAIN.

LEGEND:

XXS-B
- GIRDER NO.
- SOUTHBOUND
- SPAN NO.

UNOFFICIAL WEBSITE COPY

ADDENDA / REVISIONS

SCALE AS NOTED

REHABILITATION OF I-95, 2ND STREET ON-RAMP IMPROVEMENTS

CONTRACT	BRIDGE NO.	1 748S 059
T201907402	DESIGNED BY: D. NIZAMOFF	
COUNTY		
NEW CASTLE	CHECKED BY: W. GESCHREI	

PIER 36D PLAN, ELEVATION & SECTION

PR-11

SECTION	WRA
SHEET NO.	70

N:\31987-004\Contract_Ramp_D\CADD\Bridge\BR1-748S_PR36D1.dgn
8/23/2019 4:30:58 PM

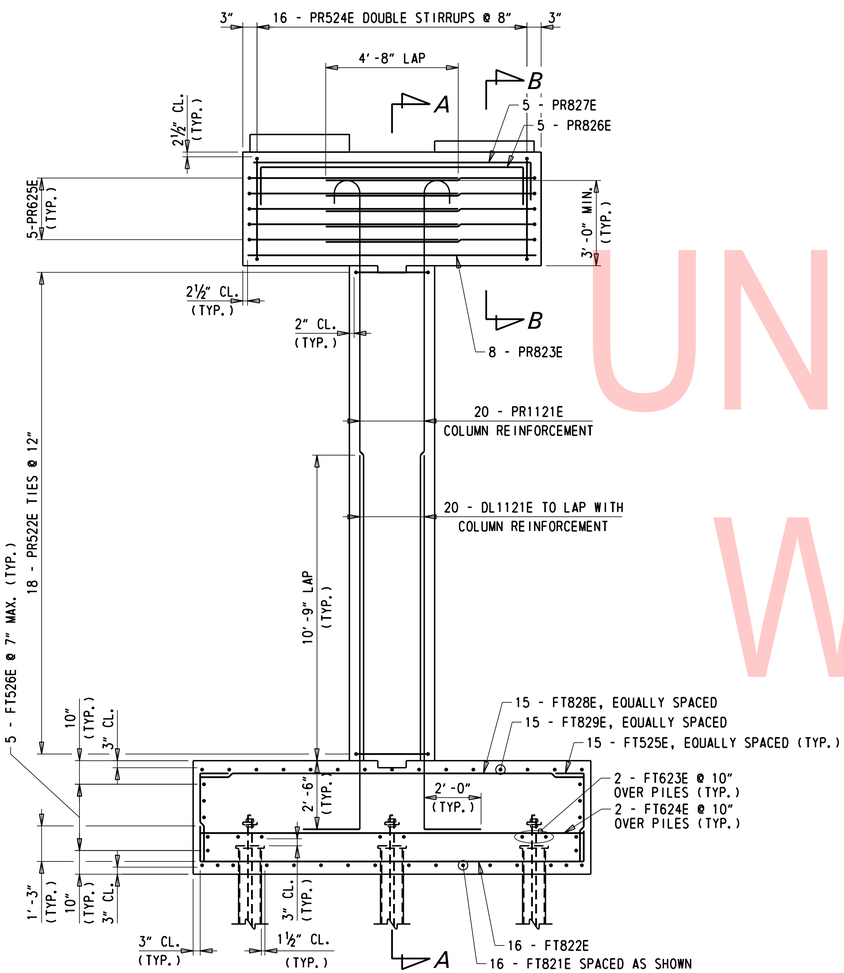

ELEVATION

⅜" = 1'-0"

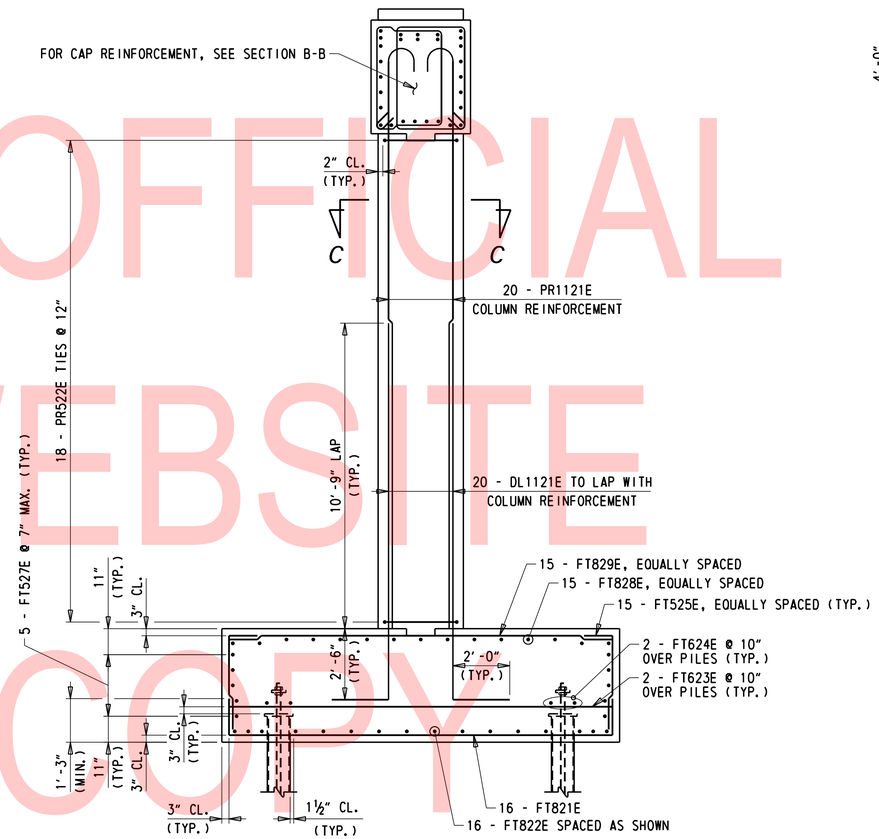

SECTION A-A

⅜" = 1'-0"

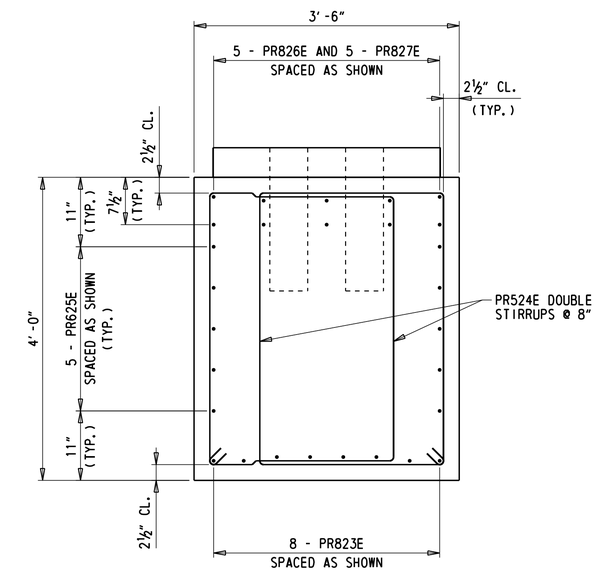

SECTION B-B

1" = 1'-0"

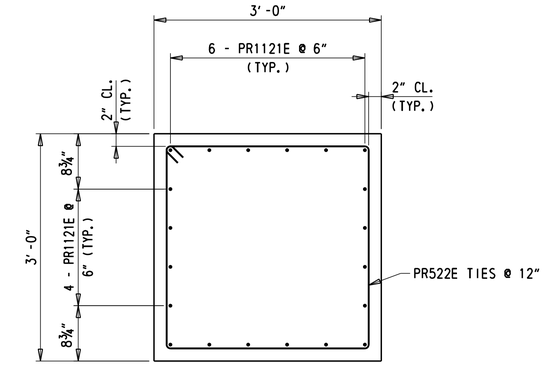

SECTION C-C

1" = 1'-0"

NOTES:

1. FOR PEDESTAL REINFORCEMENT DETAILS, SEE DWG. PR-07.

UNOFFICIAL WEBSITE COPY

N:\31987-004\Contract_Ramp_D\CADD\Bridge\BRI-7485_PR3602.dgn
8/23/2019 4:30:59 PM

ADDENDA / REVISIONS	SCALE AS NOTED	REHABILITATION OF I-95, 2ND STREET ON-RAMP IMPROVEMENTS	CONTRACT T201907402	BRIDGE NO. 1 748S 059	PIER 36D REINFORCEMENT DETAILS	PR-12
			COUNTY NEW CASTLE	DESIGNED BY: D. NIZAMOFF		SECTION WRA
				CHECKED BY: W. GESCHREI		SHEET NO. 71

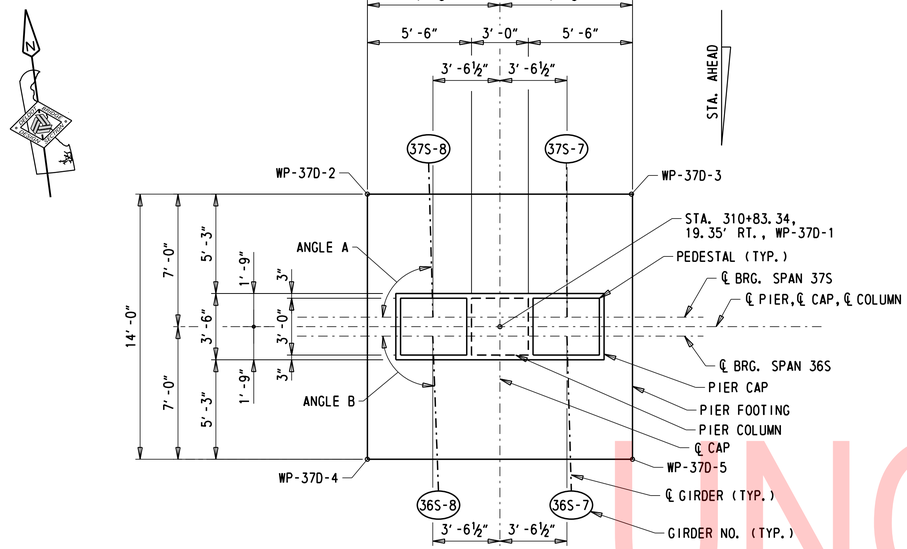

PLAN

¼" = 1'-0"

PROPOSED GIRDER	ANGLE "A"	ANGLE "B"
36S-7	-	91°38'14"
36S-8	-	92°06'00"
37S-7	89°48'50"	-
37S-8	88°23'48"	

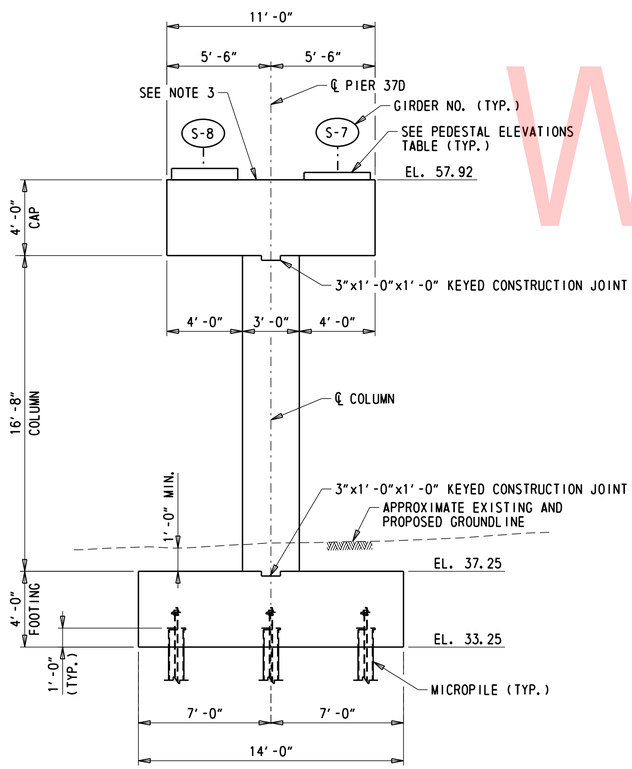

ELEVATION

¼" = 1'-0"

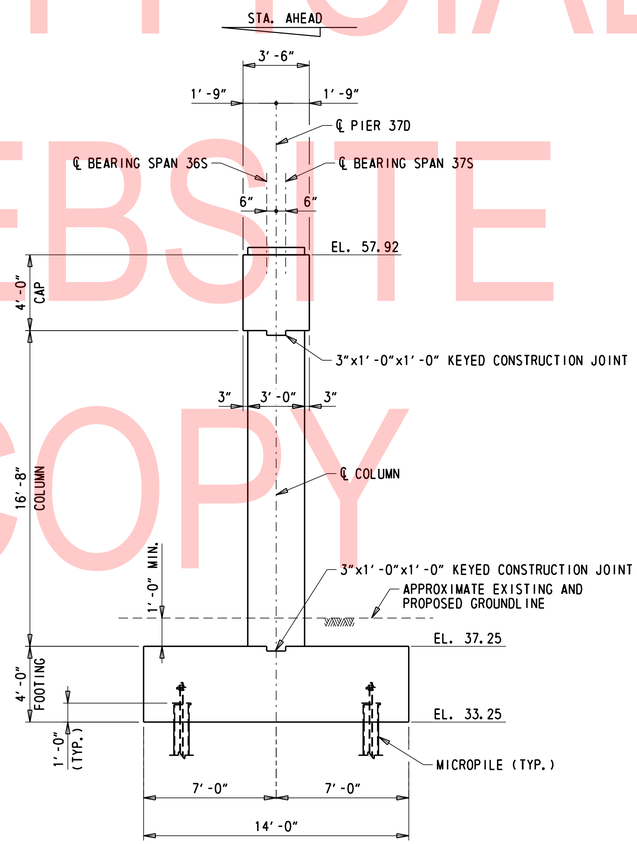

SECTION

¼" = 1'-0"

GIRDER NUMBER	PEDESTAL ELEVATION
36S-7	58.33
36S-8	58.54
37S-7	58.33
37S-8	58.54

NOTES:

1. PILES NOT SHOWN IN PLAN FOR CLARITY.
2. FOR CONCRETE PEDESTAL DETAILS, SEE DWG PR-102.
3. SLOPE TO DRAIN TOP OF CAP MIN. ¼" PER FOOT FROM CENTERLINE PIER TO FACE OF CAP. CAP DIMENSIONS SHOWN ARE MEASURED AT FACE OF CAP.
4. EPOXY CONCRETE SEALER SHALL BE PLACED ON TOP HORIZONTAL SURFACE OF CAP AND ENTIRE SURFACE OF BEARING PEDESTALS. EPOXY CONCRETE SEALER WILL BE PAID UNDER ITEM 613000. SILICONE-BASED ACRYLIC SEALER SHALL BE PLACED ON ALL REMAINING EXPOSED CONCRETE SURFACES. SILICONE-BASED ACRYLIC CONCRETE SEALER WILL BE PAID FOR UNDER ITEM 613001.
5. FOR FOOTING LAYOUT PLAN, SEE DWG. FT-01.
6. FOR PILE LAYOUT PLAN, SEE DWG. PL-04.

LEGEND:

XXS-8
- GIRDER NO.
- SOUTHBOUND
- SPAN NO.

UNOFFICIAL WEBSITE COPY

N:\31987-004\Contract_Ramp_D\CADD\Bridge\BR1-748S_PR3701.dgn
8/23/2019 4:35:00 PM

ADDENDA / REVISIONS

SCALE AS NOTED

REHABILITATION OF I-95, 2ND STREET ON-RAMP IMPROVEMENTS

CONTRACT	BRIDGE NO. 1 748S 059
T201907402	DESIGNED BY: D. NIZAMOFF
COUNTY	
NEW CASTLE	CHECKED BY: W. GESCHREI

PIER 37D PLAN, ELEVATION & SECTION

PR-13
SECTION
WRA
SHEET NO.
72

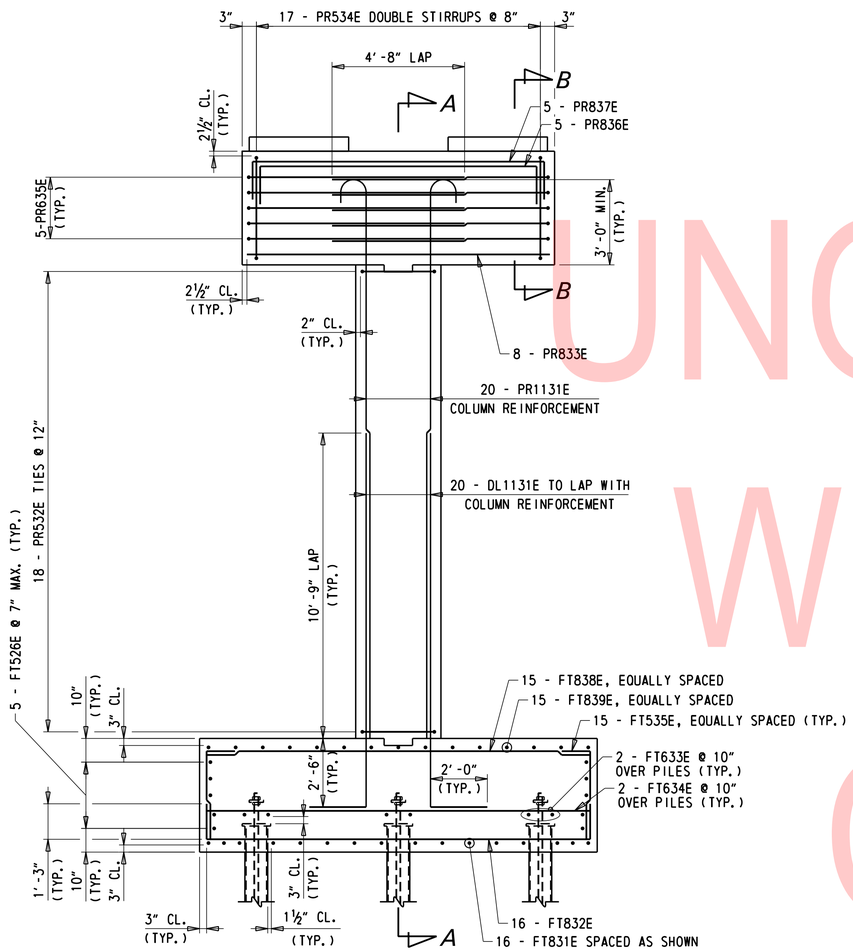

ELEVATION

⅜" = 1'-0"

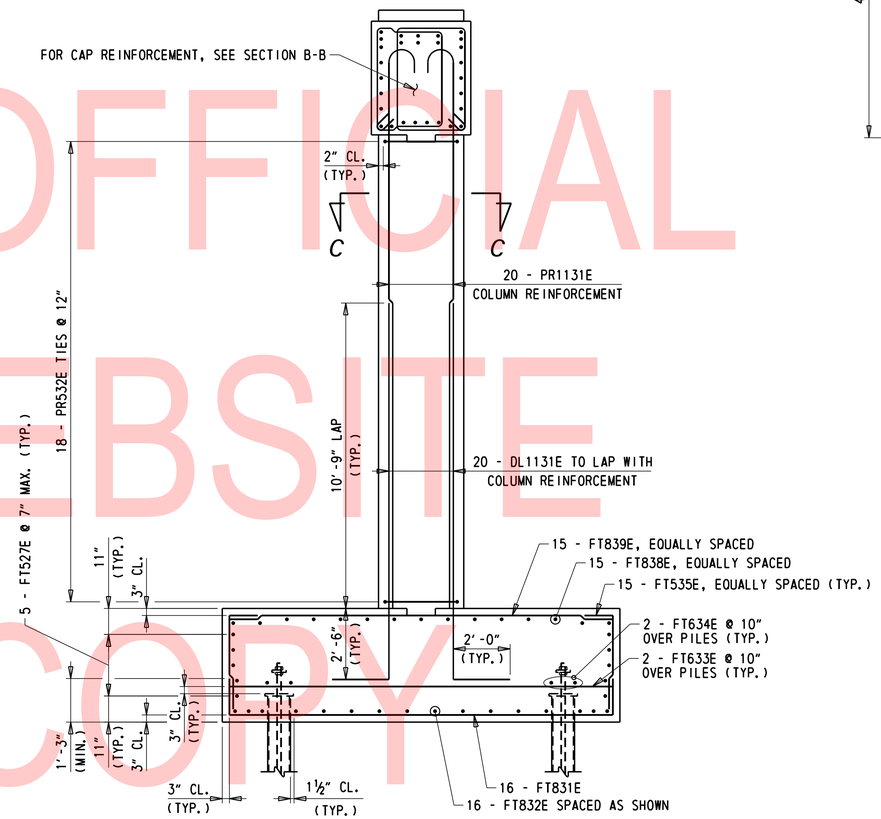

SECTION A-A

⅜" = 1'-0"

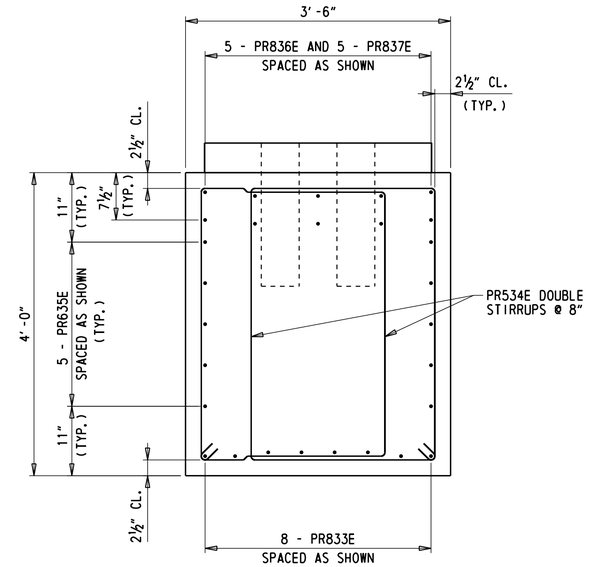

SECTION B-B

1" = 1'-0"

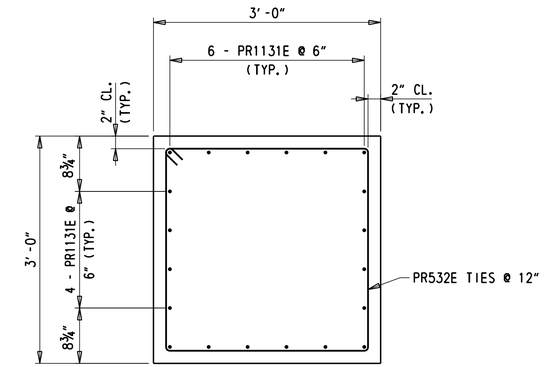

SECTION C-C

1" = 1'-0"

NOTES:

1. FOR PEDESTAL REINFORCEMENT DETAILS, SEE DWG. PR-07.

UNOFFICIAL WEBSITE COPY

N:\31997-004\Contract_Ramp_D\CADD\Bridge\BR1-748S_PR3702.dgn
8/23/2019 4:31:01 PM

ADDENDA / REVISIONS	SCALE AS NOTED	REHABILITATION OF I-95, 2ND STREET ON-RAMP IMPROVEMENTS	CONTRACT T201907402	BRIDGE NO. 1 748S 059	PIER 37D REINFORCEMENT DETAILS	PR-14
			COUNTY NEW CASTLE	DESIGNED BY: D. NIZAMOFF		SECTION WRA
				CHECKED BY: W. GESCHREI		SHEET NO. 73

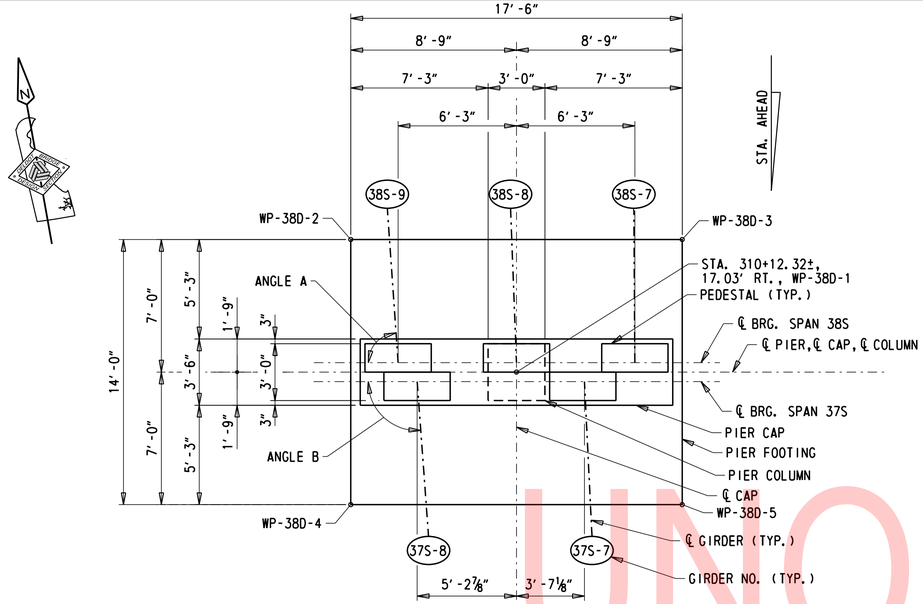

PLAN

¼" = 1'-0"

PROPOSED GIRDER	ANGLE "A"	ANGLE "B"
37S-7	-	92°47'28"
37S-8	-	94°12'30"
38S-7	89°37'40"	-
38S-8	87°48'15"	-
38S-9	86°00'29"	-

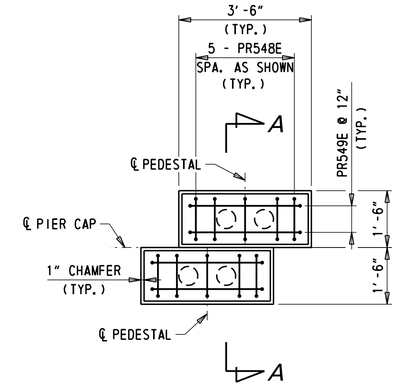

PLAN

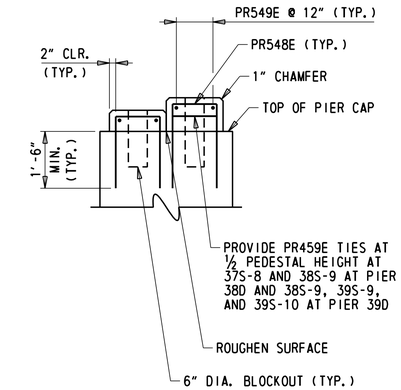

SECTION A-A

PEDESTAL REINFORCEMENT

½" = 1'-0"

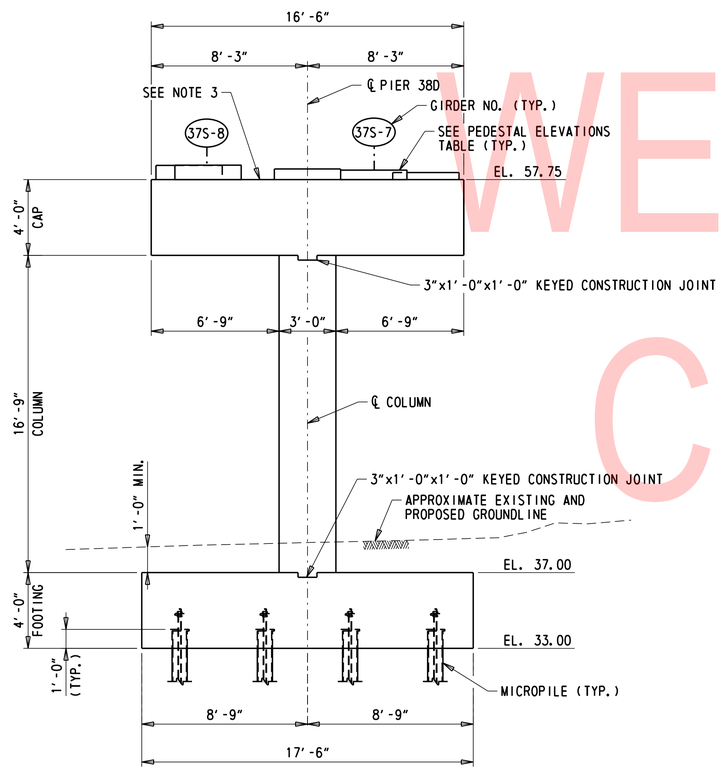

ELEVATION

¼" = 1'-0"

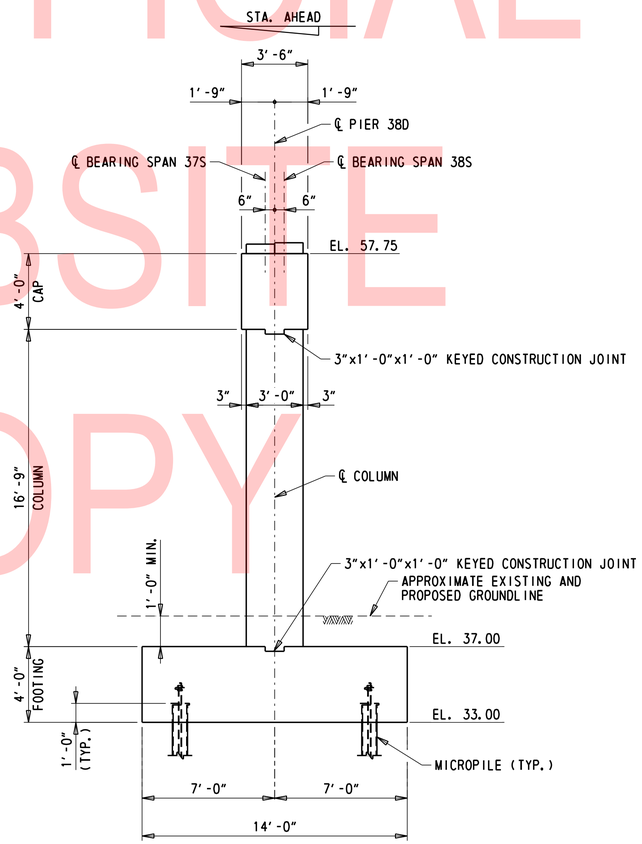

SECTION

¼" = 1'-0"

GIRDER NUMBER	PEDESTAL ELEVATION
37S-7	58.25
37S-8	58.51
38S-7	58.12
38S-8	58.31
38S-9	58.50

NOTES:

1. PILES NOT SHOWN IN PLAN FOR CLARITY.
2. FOR CONCRETE PEDESTAL DETAILS, SEE DWG PR-102.
3. SLOPE TO DRAIN TOP OF CAP MIN. ¼" PER FOOT FROM CENTERLINE PIER TO FACE OF CAP. CAP DIMENSIONS SHOWN ARE MEASURED AT FACE OF CAP.
4. EPOXY CONCRETE SEALER SHALL BE PLACED ON TOP HORIZONTAL SURFACE OF CAP AND ENTIRE SURFACE OF BEARING PEDESTALS. EPOXY CONCRETE SEALER WILL BE PAID UNDER ITEM 613000. SILICONE-BASED ACRYLIC SEALER SHALL BE PLACED ON ALL REMAINING EXPOSED CONCRETE SURFACES. SILICONE-BASED ACRYLIC CONCRETE SEALER WILL BE PAID FOR UNDER ITEM 613001.
5. FOR FOOTING LAYOUT PLAN, SEE DWG. FT-02.
6. FOR PILE LAYOUT PLAN, SEE DWG. PL-05.

LEGEND:

XXS-8
- GIRDER NO.
- SOUTHBOUND
- SPAN NO.

UNOFFICIAL WEBSITE COPY

N:\31987-004\Contract_Ramp_D\CADD\Bridge\BR1-748S_PR38D1.dgn
8/23/2019 4:31:02 PM

ADDENDA / REVISIONS		SCALE AS NOTED	REHABILITATION OF I-95, 2ND STREET ON-RAMP IMPROVEMENTS	CONTRACT T201907402	BRIDGE NO. 1 748S 059	PIER 38D PLAN, ELEVATION & SECTION	PR-15
				COUNTY NEW CASTLE	DESIGNED BY: D. NIZAMOFF		SECTION WRA
					CHECKED BY: W. GESCHREI		SHEET NO. 74

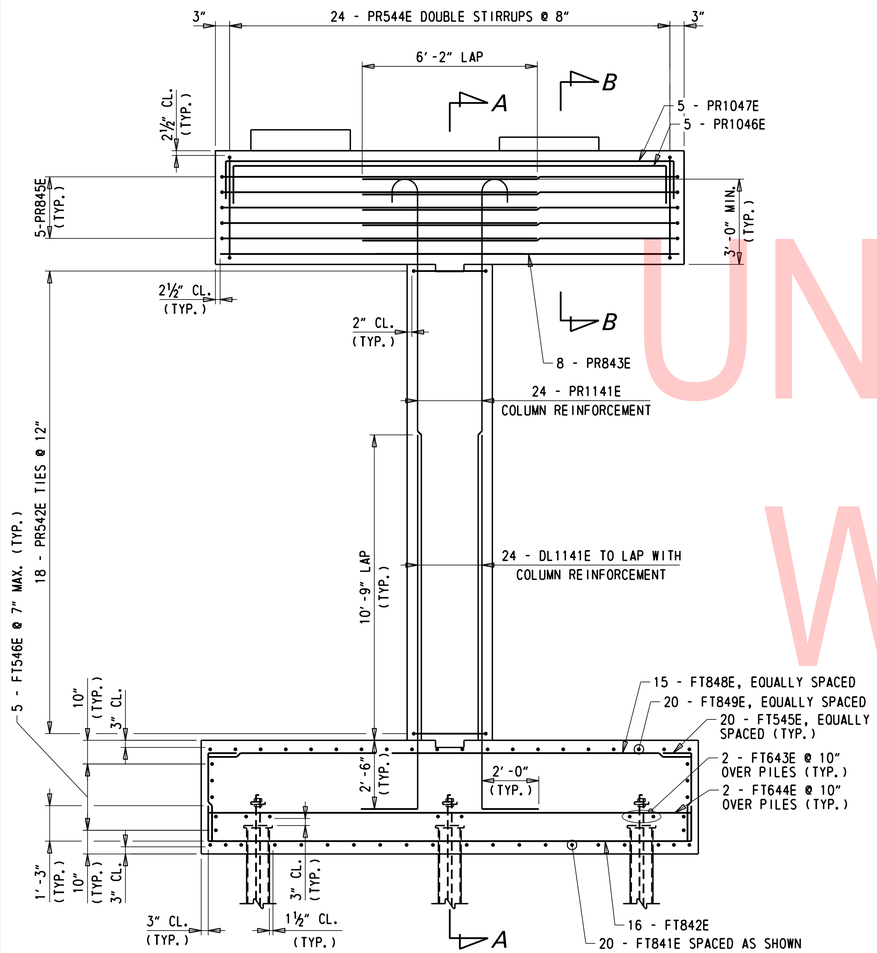

ELEVATION

⅜" = 1'-0"

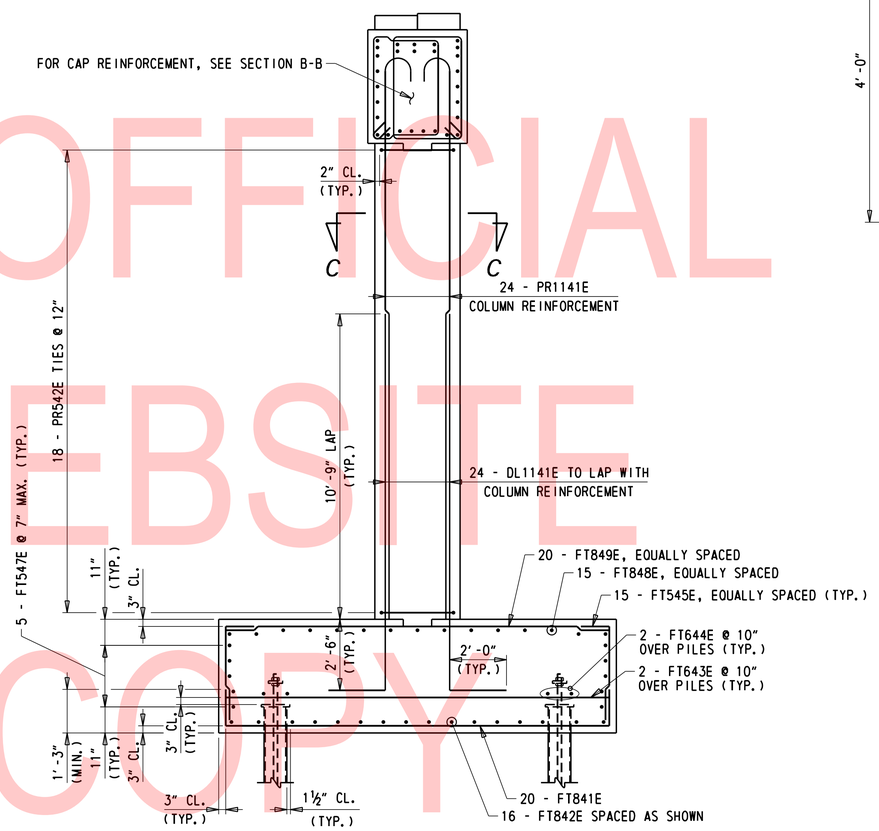

SECTION A-A

⅜" = 1'-0"

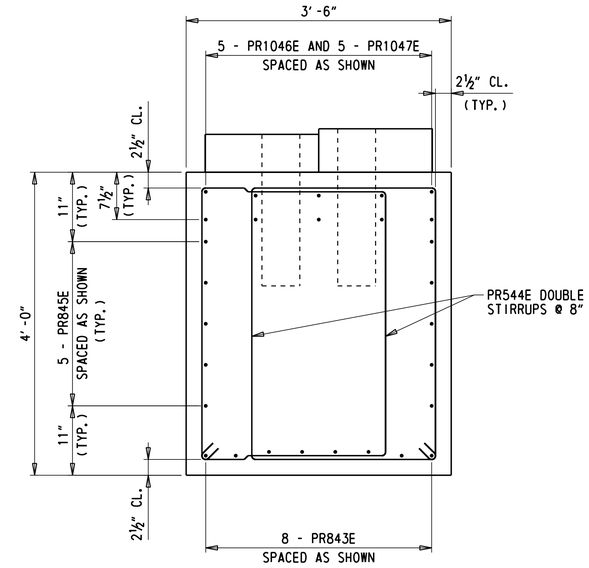

SECTION B-B

1" = 1'-0"

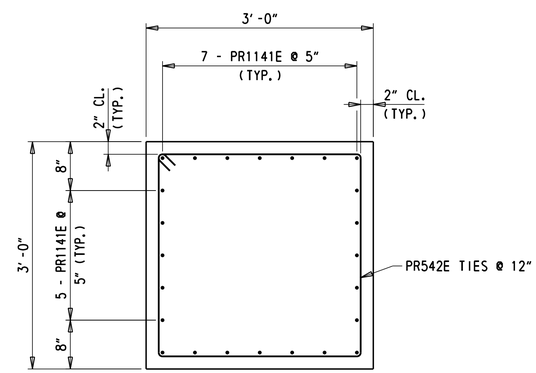

SECTION C-C

1" = 1'-0"

NOTES:

1. FOR PEDESTAL REINFORCEMENT DETAILS, SEE DWG. PR-15.

UNOFFICIAL WEBSITE COPY

N:\31987-004\Contract_Ramp_D\CADD\Bridge\BRI-7485_PR3802.dgn
8/23/2019 4:31:03 PM

ADDENDA / REVISIONS	SCALE AS NOTED	REHABILITATION OF I-95, 2ND STREET ON-RAMP IMPROVEMENTS	CONTRACT T201907402	BRIDGE NO. 1 748S 059	PIER 38D REINFORCEMENT DETAILS	PR-16
			COUNTY NEW CASTLE	DESIGNED BY: D. NIZAMOFF		SECTION WRA
				CHECKED BY: W. GESCHREI		SHEET NO. 75

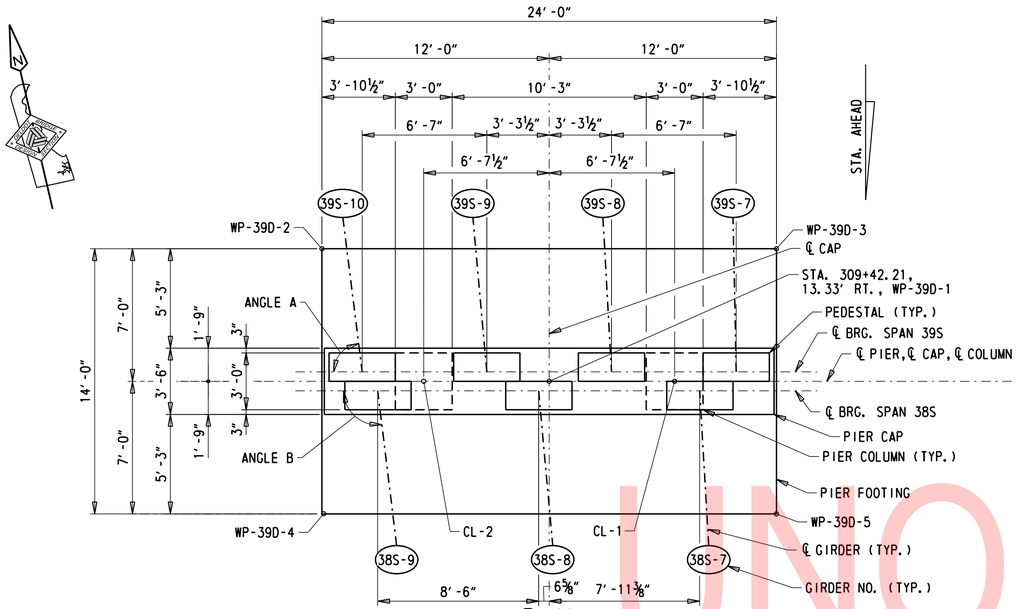

PLAN

¼" = 1'-0"

PROPOSED GIRDER	ANGLE "A"	ANGLE "B"
38S-7	-	93°21'30"
38S-8	-	95°10'55"
38S-9	-	96°58'41"
39S-7	88°49'26"	-
39S-8	86°48'23"	-
39S-9	84°49'10"	-
39S-10	82°52'00"	-

PIER COLUMN COORDINATES				
POINT	STATION	OFFSET	NORTHING	EASTING
CL-1	309+40.32	19.89' RT.	633963.2876	615114.4010
CL-2	309+42.09	6.76' RT.	633966.4132	615101.4703

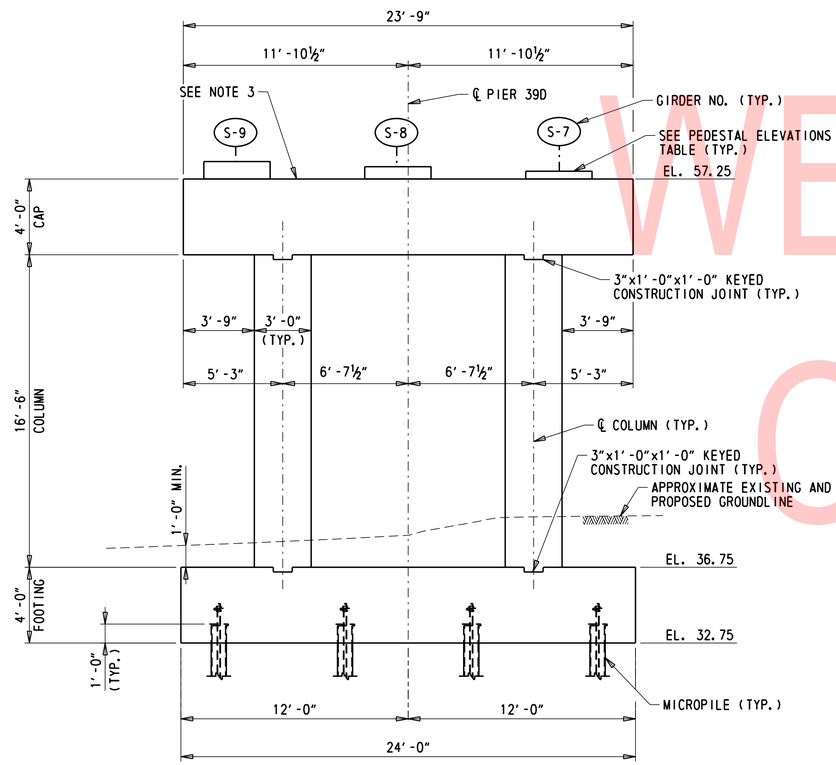

ELEVATION

¼" = 1'-0"

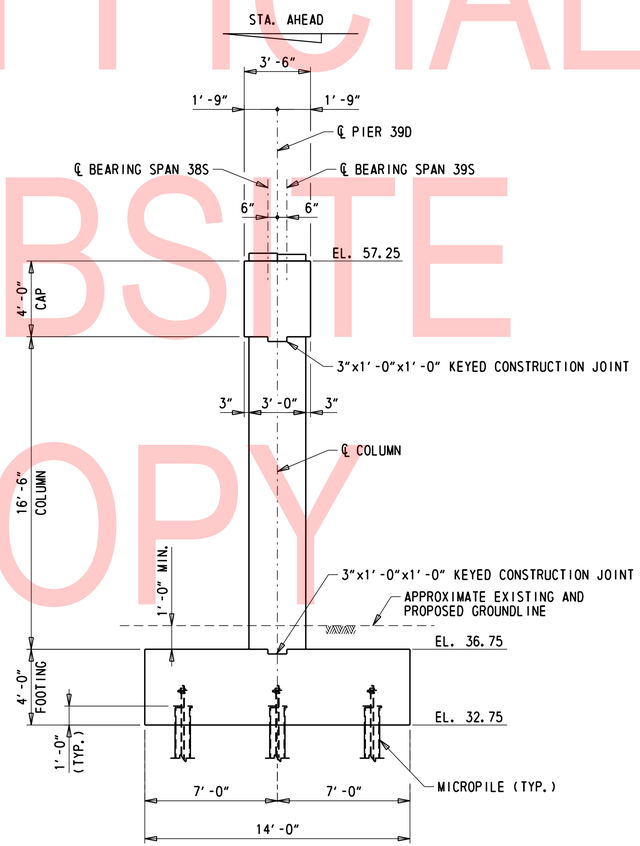

SECTION

¼" = 1'-0"

GIRDER NUMBER	PEDESTAL ELEVATION
38S-7	57.89
38S-8	58.14
38S-9	58.40
39S-7	57.89
39S-8	58.02
39S-9	58.22
39S-10	58.42

NOTES:

1. PILES NOT SHOWN IN PLAN FOR CLARITY.
2. FOR CONCRETE PEDESTAL DETAILS, SEE DWG PR-15.
3. SLOPE TO DRAIN TOP OF CAP MIN. ¼" PER FOOT FROM CENTERLINE PIER TO FACE OF CAP. CAP DIMENSIONS SHOWN ARE MEASURED AT FACE OF CAP.
4. EPOXY CONCRETE SEALER SHALL BE PLACED ON TOP HORIZONTAL SURFACE OF CAP AND ENTIRE SURFACE OF BEARING PEDESTALS. EPOXY CONCRETE SEALER WILL BE PAID UNDER ITEM 613000. SILICONE-BASED ACRYLIC SEALER SHALL BE PLACED ON ALL REMAINING EXPOSED CONCRETE SURFACES. SILICONE-BASED ACRYLIC CONCRETE SEALER WILL BE PAID FOR UNDER ITEM 613001.
5. FOR FOOTING LAYOUT PLAN, SEE DWG. FT-02.
6. FOR PILE LAYOUT PLAN, SEE DWG. PL-06.

LEGEND:

XXS-8
- GIRDER NO.
- SOUTHBOUND
- SPAN NO.

UNOFFICIAL WEBSITE COPY

N:\31987-004\Contract_Ramp_D\CADD\Bridge\BR1-748S_PR39D1.dgn
8/23/2019 4:31:04 PM

ADDENDA / REVISIONS	

SCALE AS NOTED

REHABILITATION OF I-95, 2ND STREET ON-RAMP IMPROVEMENTS

CONTRACT	BRIDGE NO.	1 748S 059
T201907402	DESIGNED BY: D. NIZAMOFF	
COUNTY	CHECKED BY: W. GESCHREI	
NEW CASTLE		

PIER 39D PLAN, ELEVATION & SECTION

PR-17
SECTION
WRA
SHEET NO.
76

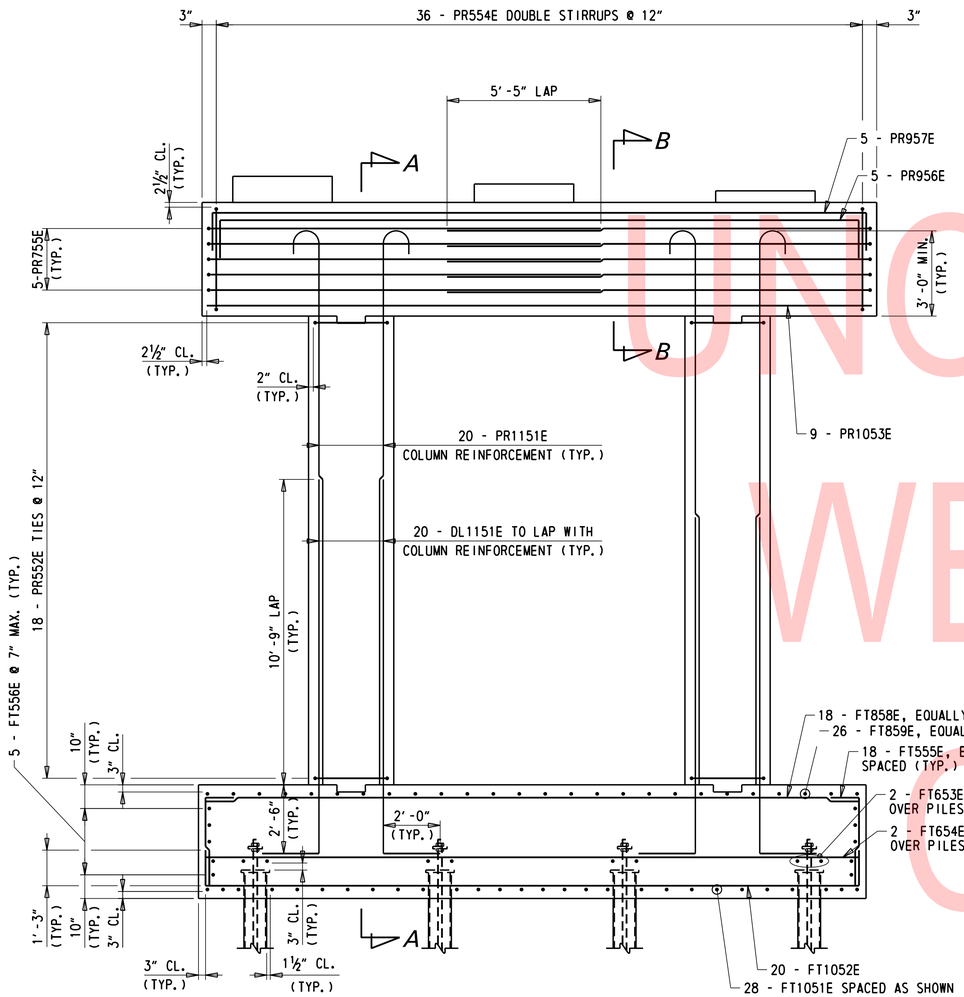

ELEVATION

⅜" = 1'-0"

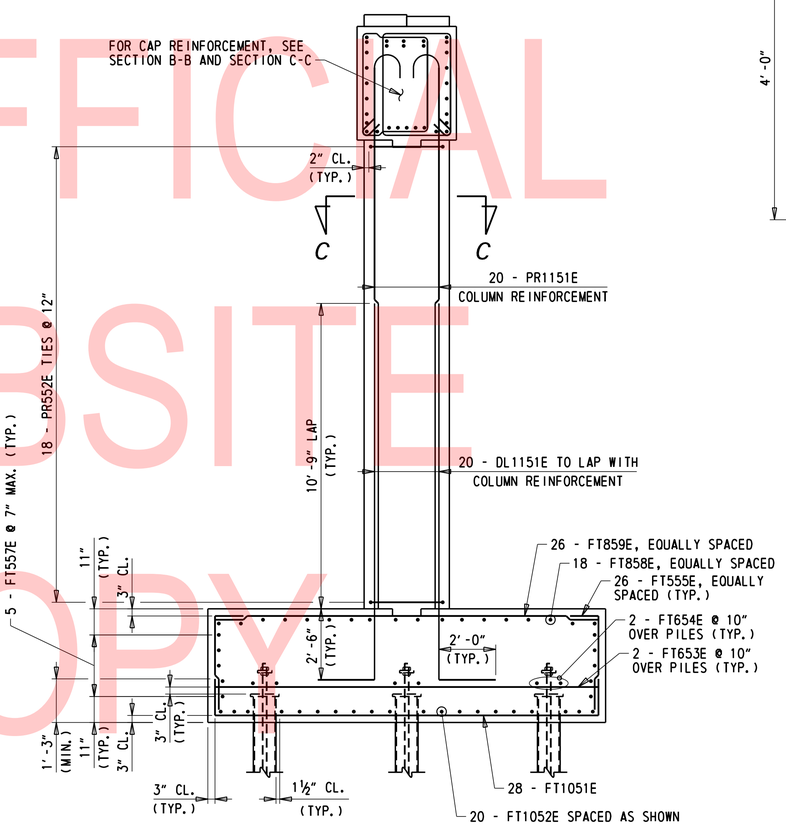

SECTION A-A

⅜" = 1'-0"

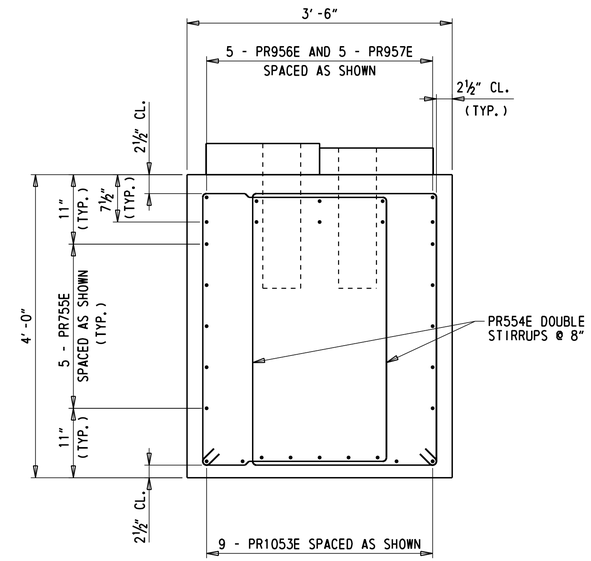

SECTION B-B

1" = 1'-0"

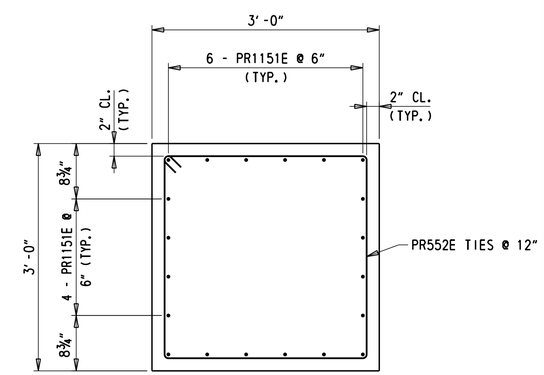

SECTION C-C

1" = 1'-0"

NOTES:

1. FOR PEDESTAL REINFORCEMENT DETAILS, SEE DWG. PR-15.

UNOFFICIAL WEBSITE COPY

N:\39897-004\Contract_Ramp_D\CADD\Bridge\BR1-748S_PR3902.dgn
8/23/2019 4:31:04 PM

ADDENDA / REVISIONS	SCALE AS NOTED	REHABILITATION OF I-95, 2ND STREET ON-RAMP IMPROVEMENTS	CONTRACT T201907402	BRIDGE NO. 1 748S 059	PIER 39D REINFORCEMENT DETAILS	PR-18
			COUNTY NEW CASTLE	DESIGNED BY: D. NIZAMOFF		SECTION WRA
				CHECKED BY: W. GESCHREI		SHEET NO. 77

BRIDGE JACKING NOTES:

1. CONTRACTOR SHALL VERIFY COMPATIBILITY OF THE JACKING ASSEMBLY WITH THE HYDRAULIC JACK (SEE NOTE 15) PRIOR TO FABRICATION. ALTERNATE JACKING SCHEMES OR ASSEMBLIES MAY BE SUBMITTED TO THE ENGINEER FOR APPROVAL. SUBMISSION SHALL INCLUDE DETAILED SHOP DRAWINGS AND CALCULATIONS SEALED BY A PROFESSIONAL ENGINEER REGISTERED IN THE STATE OF DELAWARE. ANY ALTERNATE DESIGN SHALL BE STRUCTURALLY EQUIVALENT AND MAY BE REJECTED BY THE ENGINEER FOR ANY REASON INCLUDING REASONS NOT RELATED TO STRUCTURAL EQUIVALENCY. NO ADDITIONAL PAYMENT WILL BE MADE FOR ALTERNATE JACKING SCHEMES OR ASSEMBLIES.

2. THE CONTRACTOR SHALL VERIFY ALL EXISTING FIELD DIMENSIONS PRIOR TO ORDERING OR FABRICATING THE JACKING DIAPHRAGM, TEMPORARY BEARING STIFFENERS, AND JACKING ASSEMBLY, AND PRIOR TO DRILLING HOLES IN EXISTING STEEL BEAMS.

3. ALL STEEL PLATES AND STEEL ROLLED SHAPES SHALL BE AASHTO M 270, GRADE 50 MATERIAL.

4. UNLESS OTHERWISE NOTED, ALL BOLTS SHALL BE ASTM F3125 GR. A325. ALL BOLTS ARE DESIGNED WITH THE THREADS INCLUDED IN THE SHEAR PLANE. ALL HOLES FOR BOLTS SHALL BE 1/16" DIAMETER LARGER THAN THE DIAMETER OF THE BOLT. REFER TO THE PERTINENT PLAN SHEETS FOR BOLT SIZES.

5. ALL METAL WORK AND ALL WELDING SHALL BE PERFORMED IN ACCORDANCE WITH THE STANDARD SPECIFICATIONS, SECTION 615.

6. JACKING ASSEMBLY, JACKING STIFFENERS, AND TEMPORARY BEARING STIFFENERS SHALL BE SET PLUMB TO VERTICAL.

7. WORK SHALL CONSIST OF JACKING THE EXISTING BEAMS, REMOVING THE EXISTING BEARINGS, AND INSTALLING NEW STEEL PLATE FIXED BEARINGS AND BRONZE PLATE EXPANSION BEARINGS. FOR LOCATIONS OF BEARING REPLACEMENTS, SEE DWG. BB-01. ADDITIONAL CONCRETE REPAIR WORK THAT MAY BE REQUIRED PRIOR TO PERFORMING JACKING OPERATIONS IS DETAILED ON DWGS. PR-01 TO PR-06.

8. THE ENGINEER SHALL BE PRESENT DURING ALL JACKING OPERATIONS TO ENSURE CONFORMANCE WITH ALL PERTINENT CONTRACT PROVISIONS.

9. IN THE PRESENCE OF THE ENGINEER, THE CONTRACTOR SHALL INSPECT THE CONDITION OF THE EXISTING STEEL BEAMS FOR ANY DEFECTS WHICH MAY IMPACT THE LOAD CARRYING CAPACITY OF THE BEAM DURING JACKING. IF ANY DEFECTS ARE FOUND THE CONTRACTOR SHALL STOP WORK AT THAT LOCATION AND NOTIFY THE ENGINEER IMMEDIATELY.

   WHERE CONCRETE REPAIRS TO THE PIER CAPS AND PEDESTALS OVERLAP WITH THE JACKING OPERATIONS, THE CONCRETE SHALL BE REPAIRED PRIOR TO THE JACKING OPERATIONS. ALL CONCRETE REPAIRS SHALL BE PERFORMED AND WILL BE PAID FOR AS SHOWN ON DWG. PN-04. JACKING OPERATIONS SHALL NOT BE PERFORMED UNTIL THE REPAIRED AREAS HAVE REACHED A COMPRESSIVE STRENGTH OF 3,000 PSI.

10. THE CONTRACTOR SHALL HAVE THE PROPOSED BEARING ASSEMBLIES FOR THE BEARING LINE BEING REPLACED ON SITE PRIOR TO COMMENCING WITH JACKING OPERATIONS. THE PROPOSED BEARING ASSEMBLIES MUST BE ACCEPTED BY THE ENGINEER BEFORE PROCEEDING WITH THE WORK.

11. WHEN MULTIPLE HYDRAULIC JACKS ARE USED FOR THE JACKING OPERATION, THEY SHALL BE OPERATED CONCURRENTLY (MANIFOLDED) TO PROVIDE AN EQUAL AND BALANCED LIFTING FORCE.

    THE MAXIMUM DIFFERENTIAL DISPLACEMENT BETWEEN ANY TWO ADJACENT BEAMS IS NOT TO EXCEED 1/8" AT ANY TIME.

    THE MAXIMUM VERTICAL DISPLACEMENT OF ANY BEAM FROM THE EXISTING LOCATION IS NOT TO EXCEED 1/4" AT ANY TIME.

12. THE CONTRACTOR SHALL USE ONLY THOSE JACKS WITH LOCK-NUTS CAPABLE OF SUPPORTING A LOAD EQUAL TO THE RATED CAPACITY OF THE JACK IN THE EVENT THE JACK LOSES HYDRAULIC PRESSURE. THE CONTRACTOR SHALL ADVANCE THE LOCK-NUTS ON ALL JACKS SUCH THAT THE MAXIMUM DISTANCE BETWEEN THE TOP OF A JACK AND THE LOCK-NUT SHALL NOT EXCEED 1/8" AT ANY TIME DURING THE JACKING PROCEDURE.

13. NO REPAIR WORK SHALL BE PERFORMED UNTIL THE JACKING OPERATION IS COMPLETE AND THE BRIDGE IS FULLY SUPPORTED BY THE JACKING ASSEMBLY (JACKING DIAPHRAGM, LOCK-NUT JACK, SPACER COLUMN, ETC.).

14. LIVE LOAD SHALL BE TEMPORARILY REMOVED FROM THE BRIDGE DURING JACKING UNTIL THE BRIDGE IS FULLY SUPPORTED BY THE JACKING ASSEMBLIES.

15. THE HYDRAULIC JACKS FOR THE TYPICAL JACKING SCHEME SHALL HAVE A MINIMUM CAPACITY OF 200 TONS. THE MAXIMUM FACTORED LOADS OF ALL SPANS WERE USED TO SIZE THE HYDRAULIC JACK.

16. THE FACTORED LOADS FOR JACKING USE A DEAD LOAD FACTOR OF 1.30 AND A LIVE LOAD FACTOR OF 1.75. THE FACTORED LOADS SHOWN IN THE TABLE ON THIS SHEET WERE USED FOR THE DESIGN OF THE JACKING DIAPHRAGMS AND JACKING ASSEMBLIES, EXCLUDING THE HYDRAULIC JACK.

17. CONTRACTOR TO PROVIDE DETAIL FOR APPROVAL BY THE ENGINEER THAT ALLOWS FOR MOVEMENT OF THE JACKING SYSTEM UNDER NORMAL THERMAL CONDITIONS AS NOTED IN THE DETAIL ON DWG. RH-03 PRIOR TO FABRICATION.

SUGGESTED SEQUENCE OF CONSTRUCTION:

IN EACH SPAN, EXISTING BEARING REPLACEMENTS SHALL BE COMPLETED PRIOR TO INSTALLING THE STEEL INTERMEDIATE AND END DIAPHRAGMS AND POURING THE CLOSURE POUR BETWEEN EXISTING GIRDER S-6 AND PROPOSED GIRDER S-7.

THE FOLLOWING IS A SUGGESTED SEQUENCE OF CONSTRUCTION FOR THE JACKING OPERATIONS.

1. INSTALL ALL NECESSARY TEMPORARY WORK PLATFORMS AND/OR RIGGING. CARE SHALL BE TAKEN NOT TO INTERFERE WITH PROPOSED LOCATIONS OF BEARING DEVICES, JACKING DIAPHRAGMS, AND JACKING ASSEMBLIES.

2. INSTALL ALL TEMPORARY OR PERMANENT JACKING DIAPHRAGMS AS NECESSARY.

3. PLACE NON-SHRINK GROUT LEVELING PADS AS REQUIRED AND CURE TO SPECIFIED STRENGTH.

4. INSTALL ALL JACKING ASSEMBLIES AS NECESSARY.

5. REMOVE NUTS AND WASHERS OF THE EXISTING ANCHOR BOLTS.

6. PERFORM ROLLING ROAD BLOCKS IN ACCORDANCE WITH TA-35H WHEN JACKING BEAMS OFF THEIR RESPECTIVE BEARINGS. THE CONTRACTOR SHALL PROVIDE TWO TRAFFIC OFFICERS FOR ANY ROLLING ROAD BLOCK OPERATION IN ACCORDANCE WITH TA-35H.

7. SECURE JACKING DIAPHRAGMS IN PLACE WITH LOCK-NUT JACKS AT LOCATIONS AS SHOWN IN THE JACKING SCHEMES ON DWG. RH-02 TO RH-08.

8. RELEASE LOAD IN JACK TO TRANSFER ALL LOAD TO THE JACKING ASSEMBLY AND LOCK-NUT JACK.

9. REMOVE EXISTING WELDS BETWEEN THE SOLE PLATE AND THE BOTTOM FLANGE OF THE EXISTING BEAM. CARE SHALL BE TAKEN NOT TO DAMAGE THE EXISTING BEAM. ANY DAMAGE TO THE EXISTING BEAM CAUSED BY THE CONTRACTOR'S REMOVAL METHODS SHALL BE REPAIRED AT THE CONTRACTOR'S EXPENSE AS DIRECTED BY THE ENGINEER.

10. EXISTING ANCHOR BOLTS ARE TO REMAIN IN PLACE FOR PROPOSED BEARINGS UNLESS OTHERWISE NOTED. CARE SHALL BE TAKEN NOT TO DAMAGE THE EXISTING ANCHOR BOLTS. ANY DAMAGE TO THE EXISTING ANCHOR BOLTS CAUSED BY THE CONTRACTOR'S REMOVAL METHODS SHALL BE REPAIRED AT THE CONTRACTOR'S EXPENSE AS DIRECTED BY THE ENGINEER.

11. REMOVE EXISTING BEARING ASSEMBLY. TO REMOVE THE BEARING ASSEMBLY, IT MAY BE NECESSARY TO CUT OR REMOVE THE PINTLES BETWEEN THE MASONRY PLATE, SLIDING (BRONZE) PLATE, AND/OR THE SOLE PLATE. IT MAY ALSO BE NECESSARY TO CUT THE MASONRY PLATE TO REMOVE FROM THE ANCHOR BOLTS. CARE SHALL BE TAKEN NOT TO DAMAGE THE EXISTING STEEL BEAM OR ANCHOR BOLTS TO REMAIN DURING ANY CUTTING OF THE EXISTING BEARING.

12. CLEAN THE BOTTOM SURFACE OF THE EXISTING BEAM AND APPLY PRIMER IN ACCORDANCE WITH SECTION 616. PAYMENT FOR CLEANING AND PAINTING WILL BE INCIDENTAL TO ITEM 604000 - JACKING BRIDGE.

13. THE TOP OF THE EXISTING BEARING PEDESTAL SHALL BE LEVEL AND FREE OF DEBRIS. IF REQUIRED, NON-SHRINK GROUT SHALL BE USED TO LEVEL AND PROVIDE A SMOOTH BEARING SURFACE FOR THE PROPOSED BEARING. PAYMENT FOR THIS WORK WILL BE INCIDENTAL TO ITEM 604000 - JACKING BRIDGE.

14. INSTALL PROPOSED BEARINGS. FOR THE SUGGESTED SEQUENCE OF INSTALLATION FOR BEARING TYPE ES-3, SEE DWG. BB-03 AND BB-04.

15. PERFORM ROLLING ROAD BLOCKS IN ACCORDANCE WITH TA-35H WHEN JACKING BEAM(S) OFF JACKING ASSEMBLY AND LOCK NUTS. LOWER JACKS TO TRANSFER BEAM LOADS. THE CONTRACTOR SHALL PROVIDE TWO TRAFFIC OFFICERS FOR ANY ROLLING ROAD BLOCK OPERATION IN ACCORDANCE WITH TA-35H.

16. REMOVE ALL TEMPORARY BEARING STIFFENERS, TEMPORARY JACKING DIAPHRAGMS, AND JACKING ASSEMBLIES. FILL DRILLED HOLES IN EXISTING BEAMS WITH NEW HIGH-STRENGTH BOLTS CONFORMING TO ASTM F3125 GRADE A325. NON-SHRINK GROUT LEVELING PADS USED UNDER JACKING ASSEMBLIES MAY BE LEFT IN PLACE WITH APPROVAL OF THE ENGINEER.

LOADS FOR JACKING

SPAN NO.	SUBSTRUCTURE UNIT	BEAM NO.	BEAM SPACING ALONG ℄ OF BEARING	BEAM MEMBER	ANGLE A*	UNFACTORED** DL +15%	UNFACTORED** DL +LL +IMP	FACTORED** DL +15%	FACTORED** DL +LL +IMP
SPAN 33S	PIER 34S	33S-1	7'-7"±	36 WF 150	90°-32'-20"±	45 KIP	121 KIP	59 KIP	194 KIP
		33S-2 TO 33S-5	7'-7"±	36 WF 150	90°-32'-20"±	55 KIP	148 KIP	71 KIP	237 KIP
		33S-6	7'-7"±	36 WF 150	90°-32'-20"±	45 KIP	121 KIP	59 KIP	194 KIP
SPAN 34S	PIER 35S	34S-1	7'-7"±	36 WF 150	90°-51'-27"±	45 KIP	121 KIP	59 KIP	194 KIP
		34S-2 TO 34S-5	7'-7"±	36 WF 150	90°-51'-27"±	55 KIP	148 KIP	71 KIP	237 KIP
		34S-6	7'-7"±	36 WF 150	90°-51'-27"±	45 KIP	121 KIP	59 KIP	194 KIP
SPAN 35S	PIER 35S	35S-1	7'-7"±	36 WF 150	91°-03'-20"±	45 KIP	121 KIP	59 KIP	194 KIP
		35S-2 TO 35S-5	7'-7"±	36 WF 150	91°-03'-20"±	55 KIP	148 KIP	71 KIP	237 KIP
		35S-6	7'-7"±	36 WF 150	91°-03'-20"±	45 KIP	121 KIP	59 KIP	194 KIP
SPAN 37S	PIER 37S	37S-1	7'-7"±	36 WF 150	91°-17'-55"±	49 KIP	125 KIP	64 KIP	200 KIP
		37S-2 TO 37S-5	7'-7"±	36 WF 150	91°-17'-55"±	59 KIP	153 KIP	77 KIP	245 KIP
		37S-6	7'-7"±	36 WF 150	91°-17'-55"±	49 KIP	125 KIP	64 KIP	200 KIP
SPAN 38S	PIER 39S	38S-1	7'-7"±	36 WF 150	91°-17'-55"±	49 KIP	125 KIP	64 KIP	200 KIP
SPAN 39S	PIER 39S	39S-1	7'-7"±	36 WF 150	91°-17'-55"±	49 KIP	125 KIP	64 KIP	200 KIP
		39S-6	7'-7"±	36 WF 150	91°-17'-55"±	49 KIP	125 KIP	64 KIP	200 KIP

*FOR LOCATION OF ANGLE A, SEE DWG. RH-02.
**EXISTING LOADS FOR JACKING ARE TAKEN FROM LOAD RATINGS PROVIDED BY DELDOT AND PERFORMED BY OTHERS.

UNOFFICIAL WEBSITE COPY

N:\31997-004\Contract_Ramp_D\CADD\Bridge\BRI-748S_RH01.dgn
8/23/2019 4:31:05 PM

7'-7"±

ADDENDA / REVISIONS	

SCALE AS NOTED

REHABILITATION OF I-95, 2ND STREET ON-RAMP IMPROVEMENTS

CONTRACT	BRIDGE NO. 1 748S 059
T201907402	DESIGNED BY: D. NIZAMOFF
COUNTY	
NEW CASTLE	CHECKED BY: W. GESCHREI

JACKING NOTES, LOCATIONS, AND LOADS

RH-01
SECTION WRA
SHEET NO. 78

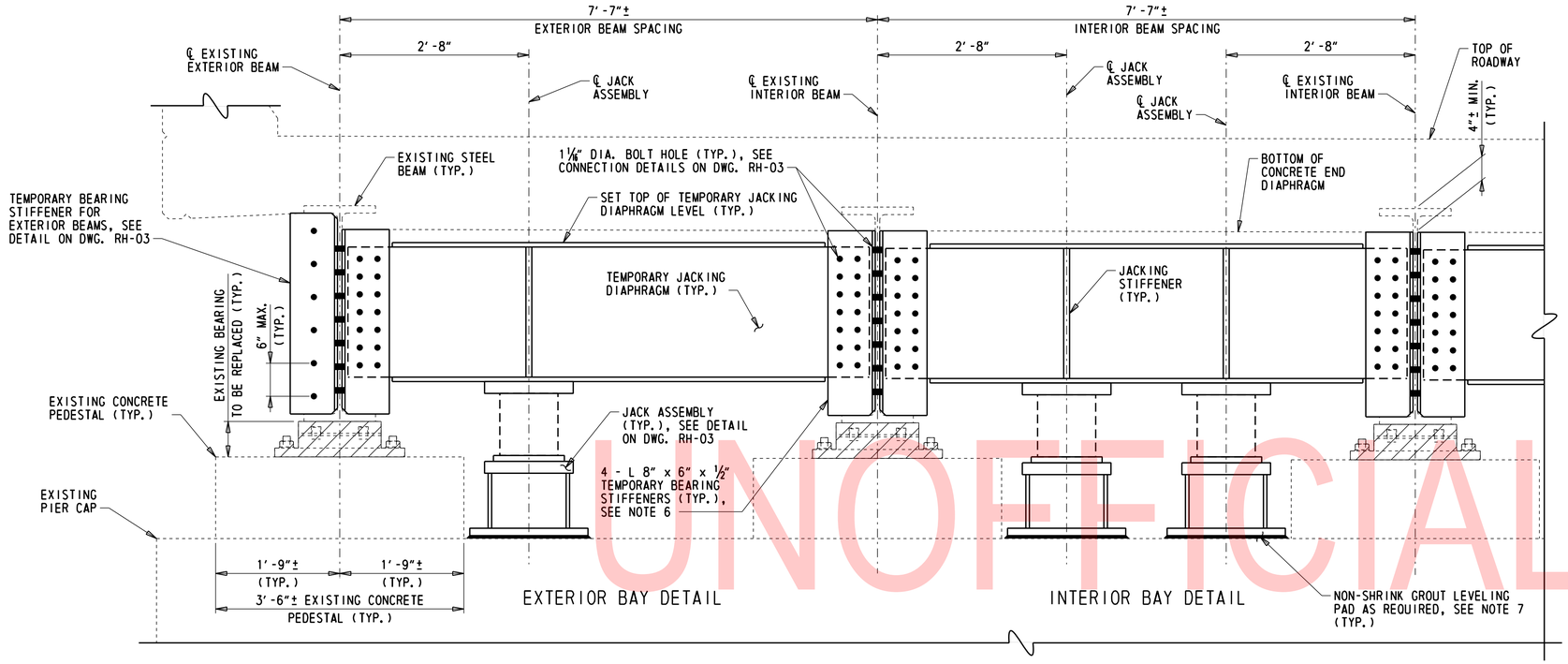

TYPICAL JACKING SCHEME - ELEVATION

1" = 1'-0"

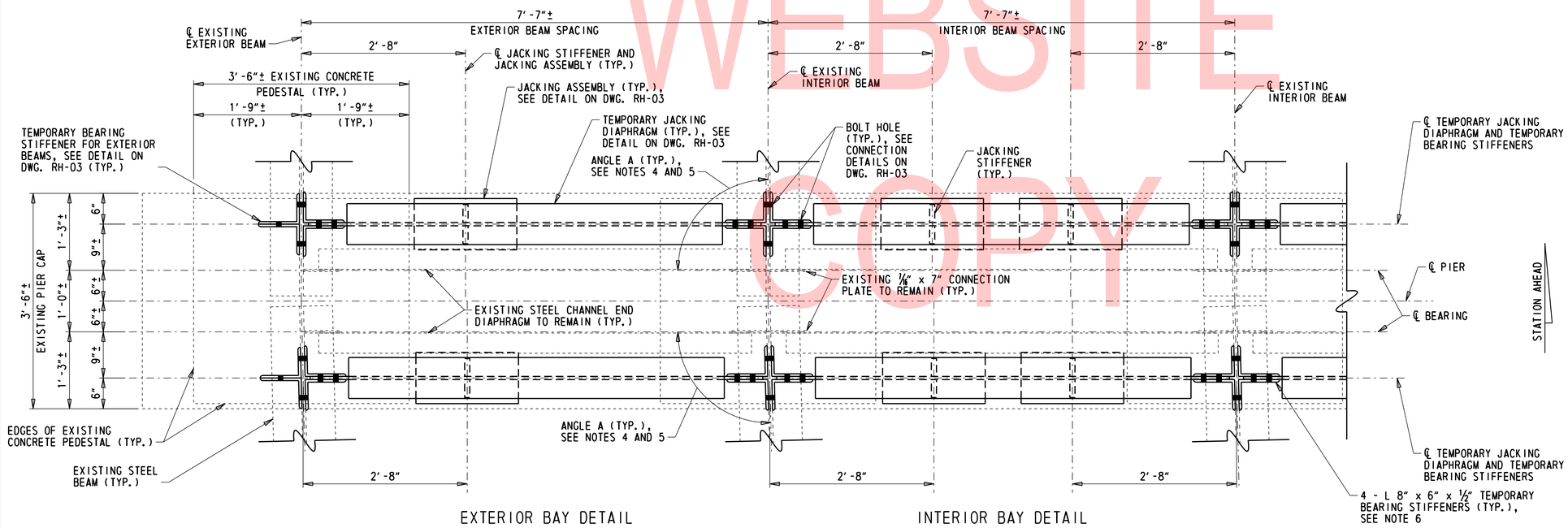

TYPICAL JACKING SCHEME - PLAN

1" = 1'-0"

NOTES:

1. FOR JACKING NOTES, SEE DWG. RH-01.
2. FOR JACKING DETAILS, SEE DWG. RH-03.
3. ALL BOLTS SHOWN ON THIS SHEET SHALL BE 1" DIAMETER.
4. ANGLE A FOR ALL SPANS IS TAKEN ON THE LEFT SIDE OF THE BEAM WHEN LOOKING STATION AHEAD.
5. FOR ANGLE A, EXISTING STEEL BEAM SIZES, AND LOADS FOR JACKING, SEE DWG. RH-01.
6. FOR TEMPORARY BEARING STIFFENERS ON SKEWED SPANS, CONTRACTOR SHALL FIELD ADJUST OR FABRICATE A NEW STEEL ANGLE TO ACCOUNT FOR THE SKEW. CONTRACTOR MAY PRESENT ALTERNATE STEEL MEMBERS FOR TEMPORARY BEARING STIFFENERS ON SKEWED SPANS. COST FOR FABRICATING A NEW STEEL ANGLE WILL BE INCIDENTAL TO ITEM 604000 - JACKING BRIDGE.
7. PLACE A NON-SHRINK GROUT PAD BENEATH THE JACKING ASSEMBLY BASE PLATE AND THE EXISTING BEAM SEAT TO ENSURE FULL AND LEVEL BEARING. NON-SHRINK GROUT SHALL BE IN ACCORDANCE WITH SUBSECTION 1047.02. PAYMENT FOR NON-SHRINK GROUT WILL BE INCIDENTAL TO ITEM 604000 - JACKING BRIDGE.
8. THE JACKING SYSTEM HAS BEEN DESIGNED TO LIFT THE ENTIRE LINE OF BEAMS AT ONCE. IF CONTRACTOR ELECTS TO JACK ONE BEAM AT A TIME, PLACE ONE JACK ON EACH SIDE OF THE BEAM AT 2'-8" FROM THE CENTERLINE OF BEAM TO JACK.

LEGEND:

- PROPOSED 1" DIA. BOLT IN 1 1/16" DIA. HOLE IN TEMPORARY JACKING DIAPHRAGM, TEMPORARY BEARING STIFFENER, OR EXISTING STEEL BEAM WEB

EXISTING BEARING TO BE REMOVED

UNOFFICIAL WEBSITE COPY

ADDENDA / REVISIONS		SCALE AS NOTED	REHABILITATION OF I-95, 2ND STREET ON-RAMP IMPROVEMENTS	CONTRACT T201907402	BRIDGE NO. 1 748S 059	JACKING SCHEME	RH-02
				COUNTY NEW CASTLE	DESIGNED BY: D. NIZAMOFF		SECTION WRA
					CHECKED BY: W. GESCHREI		SHEET NO. 79

N:\31987-004\Contract_Ramp_D\CADD\Bridge\BRI-7485_RH02.dgn
8/23/2019 4:31:06 PM

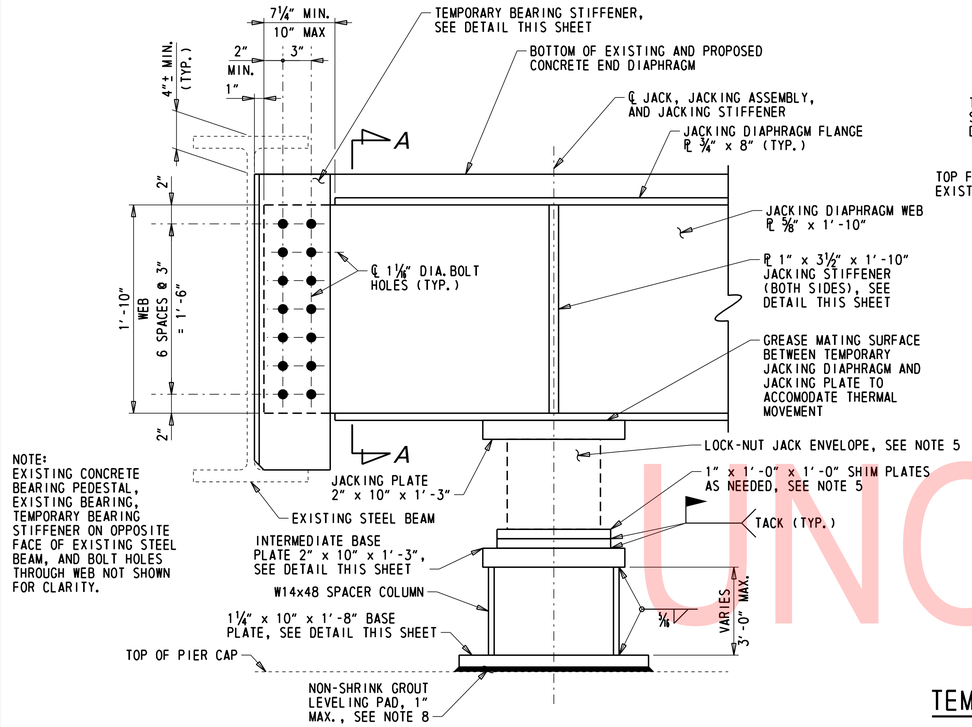

NOTE:
EXISTING CONCRETE BEARING PEDESTAL, EXISTING BEARING, TEMPORARY BEARING STIFFENER ON OPPOSITE FACE OF EXISTING STEEL BEAM, AND BOLT HOLES THROUGH WEB NOT SHOWN FOR CLARITY.

JACKING DIAPHRAGM AND JACKING ASSEMBLY

1½" = 1'-0"

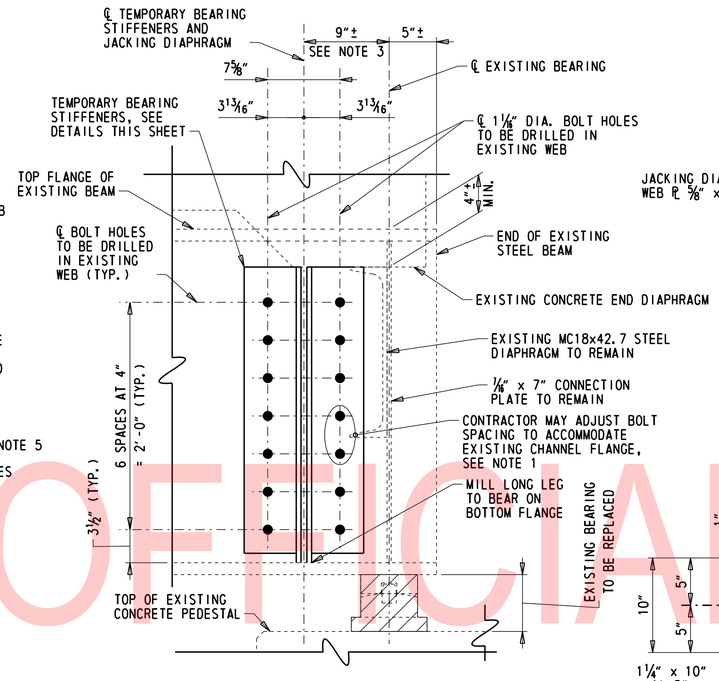

TEMPORARY BEARING STIFFENER - ELEVATION

1½" = 1'-0"

LEGEND:

- EXISTING BEARING TO REMOVED

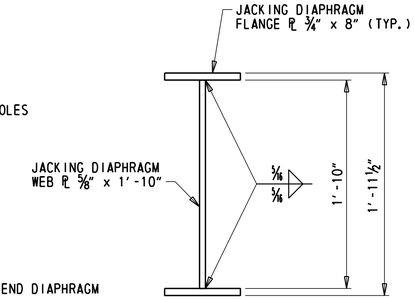

SECTION A-A

1½" = 1'-0"

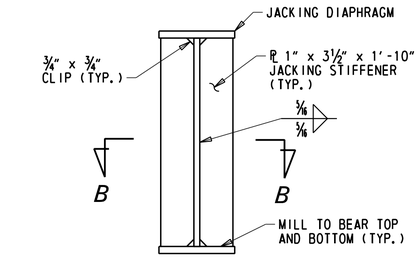

JACKING STIFFENER DETAIL

1½" = 1'-0"

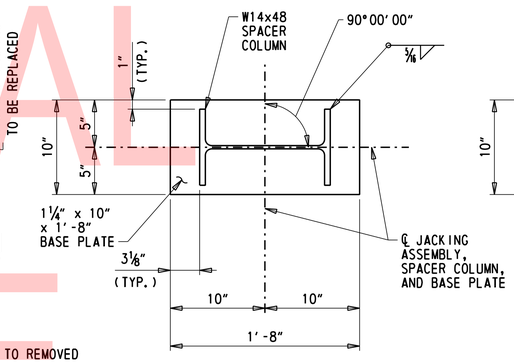

BASE PLATE DETAIL

1½" = 1'-0"

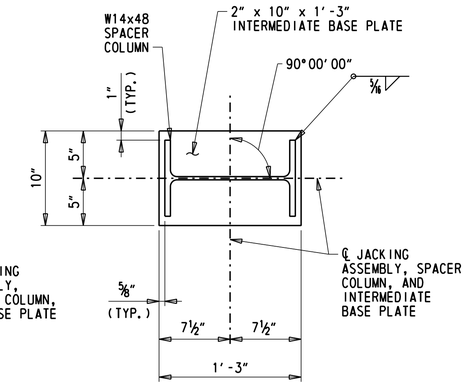

INTERMEDIATE BASE PLATE DETAIL

1½" = 1'-0"

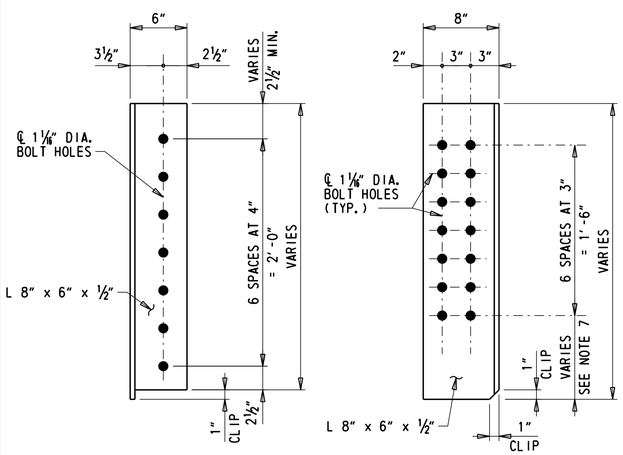

TEMPORARY BEARING STIFFENER DETAIL

1½" = 1'-0"

NOTE:
TEMPORARY BEARING STIFFENER ON OPPOSITE FACE SIMILAR BUT OPPOSITE HAND.

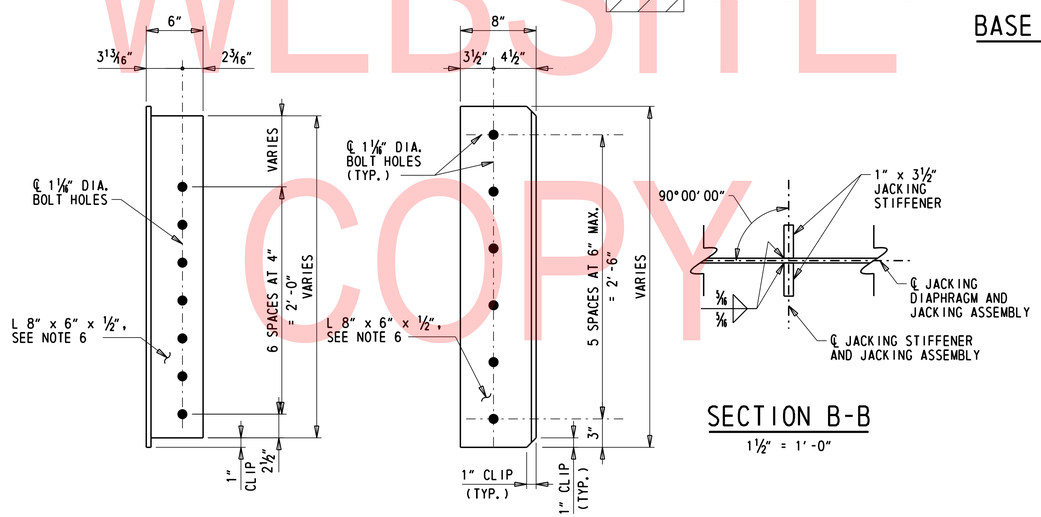

TEMPORARY BEARING STIFFENER DETAIL FOR EXTERIOR BEAMS

1½" = 1'-0"

NOTE:
TEMPORARY BEARING STIFFENER ON OPPOSITE FACE SIMILAR BUT OPPOSITE HAND.

SECTION B-B

1½" = 1'-0"

NOTES:

1. MINIMUM BOLT SPACING FOR 1" DIAMETER BOLTS IS 3".

   MAXIMUM BOLT SPACING FOR 1" DIAMETER BOLTS IS 6".

   MINIMUM EDGE DISTANCE IS 1¾".

   MAXIMUM EDGE DISTANCE IS 4".

2. REFER TO DWG. RH-01 FOR BRIDGE JACKING NOTES.
3. DIMENSION SHOWN IS MEASURED PERPENDICULAR TO THE CENTERLINE OF BEARING FOR BOTH TANGENT AND SKEWED SPANS. ON SKEWED SPANS, THE LOCATION OF THE DRILLED HOLES ALONG THE STRINGER WEB WILL VARY BASED ON SKEW ANGLE.
4. CONTRACTOR MAY PROPOSE ALTERNATE TEMPORARY BEARING STIFFENER MEMBERS FOR SKEWED SPANS. ANY ALTERNATE SECTION SHALL HAVE SIMILAR OR BETTER STRUCTURAL PROPERTIES THAN THE DETAIL SHOWN. ALTERNATE DESIGNS SHALL BE SUBMITTED TO THE ENGINEER FOR APPROVAL AND BE SEALED BY A PROFESSIONAL ENGINEER REGISTERED IN THE STATE OF DELAWARE. THERE IS NO GUARANTEE THAT ALTERNATE DETAILS WILL BE APPROVED AND THE ENGINEER RESERVES THE RIGHT TO REJECT ANY ALTERNATE SECTION FOR ANY REASON.
5. JACK ENVELOPE WILL VARY BASED ON CONTRACTOR'S SELECTED HYDRAULIC LOCK-NUT JACK. CONTRACTOR SHALL VERIFY PRIOR TO ORDERING JACKS THAT THE JACKING ASSEMBLY HAS SUFFICIENT AREA TO SUPPORT THE SELECTED JACK. ADJUST SHIM PLATE PLAN AREA AS NEEDED TO SUPPORT SELECTED JACK. SHIM PLATES WILL BE LIMITED TO A MAXIMUM HEIGHT OF 1'-0", ADJUST SPACER COLUMN AS NECESSARY.
6. TEMPORARY BEARING STIFFENER DETAIL FOR EXTERIOR BEAMS SHALL BE USED ONLY ON THE EXTERIOR FACE OF EXTERIOR BEAMS OR IN BAYS WHICH WILL NOT HAVE JACKING DIAPHRAGMS AS INDICATED ON DWG. RH-01. ALL BAYS TO RECEIVE JACKING DIAPHRAGMS SHALL UTILIZE THE TEMPORARY BEARING STIFFENER DETAIL AS SHOWN ON THIS SHEET.
7. BOLT HOLES IN THE LONG LEG OF THE TEMPORARY BEARING STIFFENER SHALL BE POSITIONED VERTICALLY AS NEEDED TO ALLOW JACKING DIAPHRAGM TO BE INSTALLED LEVEL BETWEEN EXISTING BEAMS.
8. NON-SHRINK GROUT SHALL BE IN ACCORDANCE WITH SUBSECTION 1047.02. PAYMENT FOR NON-SHRINK GROUT WILL BE INCIDENTAL TO ITEM 604000 - JACKING BRIDGE.

UNOFFICIAL WEBSITE COPY

ADDENDA / REVISIONS		SCALE AS NOTED	REHABILITATION OF I-95, 2ND STREET ON-RAMP IMPROVEMENTS	CONTRACT T201907402	BRIDGE NO. 1 748S 059	JACKING DETAILS	RH-03
				COUNTY NEW CASTLE	DESIGNED BY: D. NIZAMOFF		SECTION WRA
					CHECKED BY: W. GESCHREI		SHEET NO. 80

N:\31987-004\Contract_Ramp_D\CADD\Bridge\BRI-748S_RH03.dgn
8/23/2019 4:31:07 PM

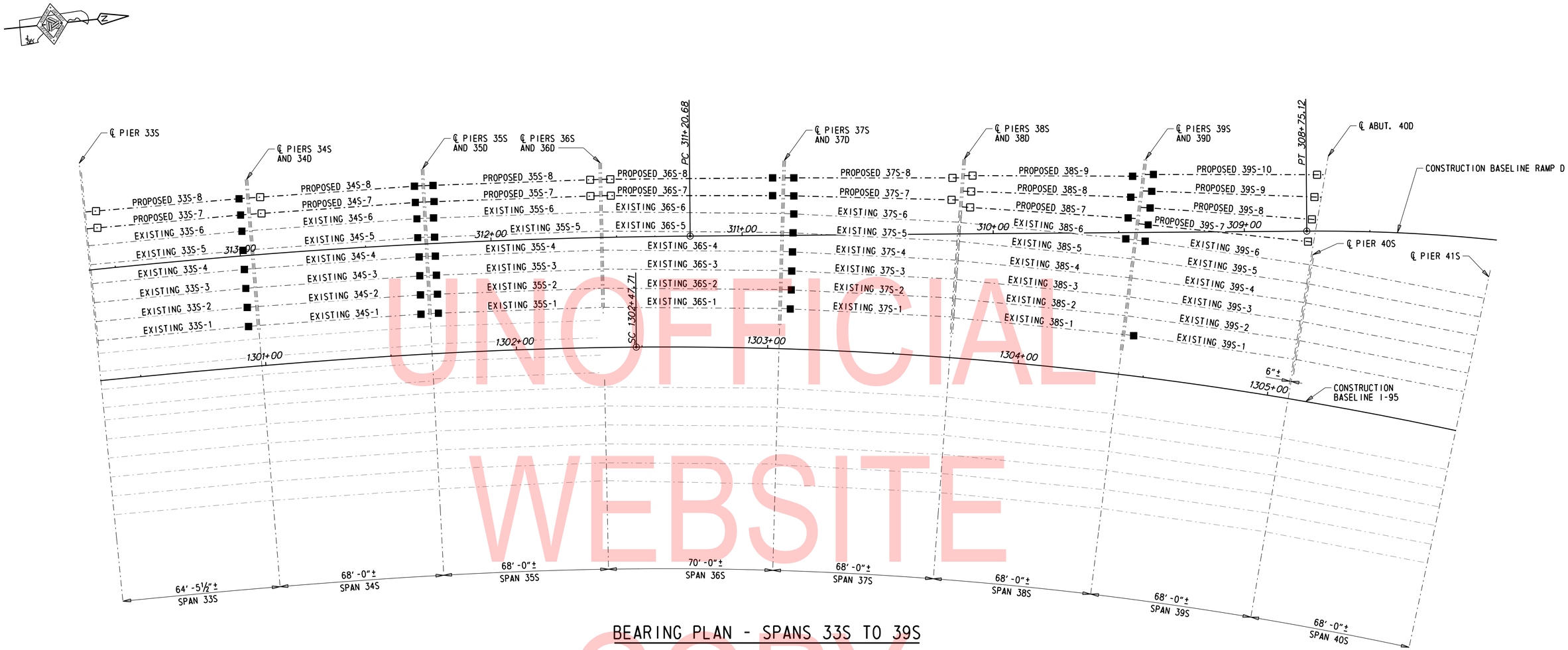

BEARING PLAN - SPANS 33S TO 39S

UNOFFICIAL WEBSITE COPY

BEARING SYMBOL LEGEND:

□ - BEARING TYPE FS-3 (REFER TO DWG. BB-02)

■ - BEARING TYPE ES-3 (REFER TO DWGS. BB-03 AND BB-04)

NOTES:

1. BEAMS FOR BRIDGE NO. 1-748N (I-95 NB) AND 1-758G (RAMP F) ARE SHOWN SCREENED FOR INFORMATION ONLY.
2. EXISTING BEAMS SHALL BE JACKED AS REQUIRED TO FACILITATE BEARING REPLACEMENT. SEE DETAILS ON DWGS. RH-01 THROUGH RH-03.

ADDENDA / REVISIONS	

SCALE 0 20 40 60 FEET

REHABILITATION OF I-95, 2ND STREET ON-RAMP IMPROVEMENTS

CONTRACT	BRIDGE NO.	1 748S 059
T201907402	DESIGNED BY: D. NIZAMOFF	
COUNTY		
NEW CASTLE	CHECKED BY: W. GESCHREI	

BEARING PLAN

BB-01
SECTION
WRA
SHEET NO.
81

N:\31987-004\Contract_Ramp_D\CADD\Bridge\BR1-748S_BB01.dgn
8/23/2019 4:31:07 PM

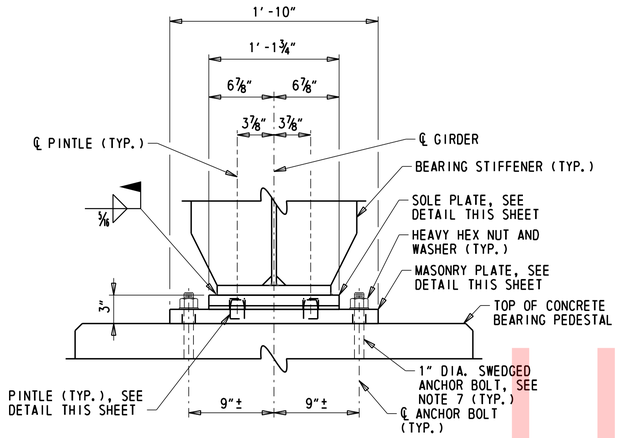

FRONT ELEVATION

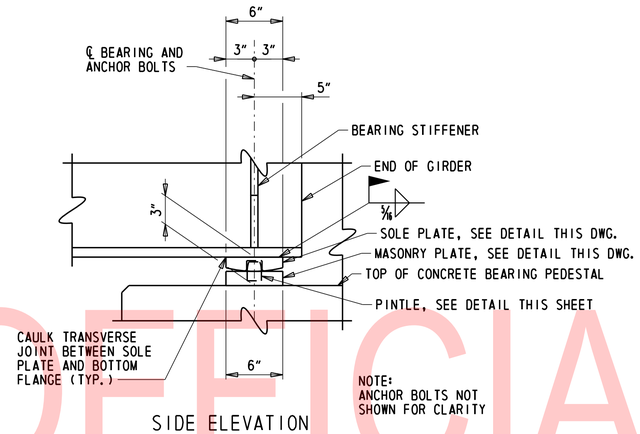

SIDE ELEVATION

BEARING TYPE FS-3

1½" = 1'-0"

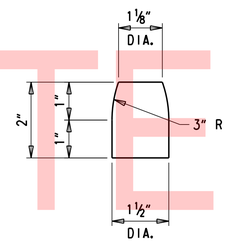

PINTLE DETAIL

6" = 1'-0"

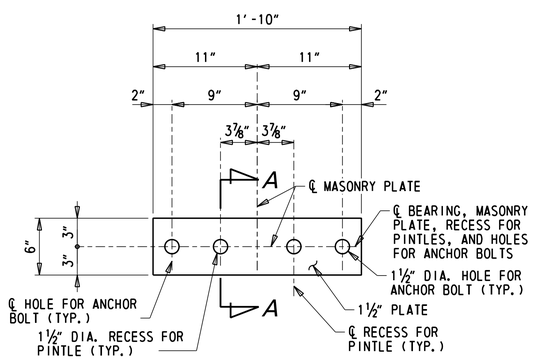

MASONRY PLATE DETAIL

1½" = 1'-0"

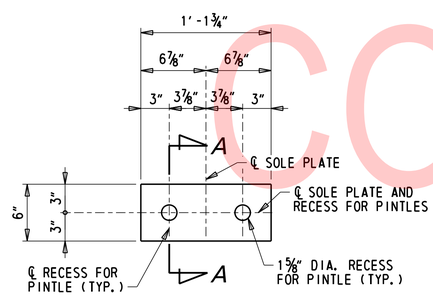

SOLE PLATE DETAIL

1½" = 1'-0"

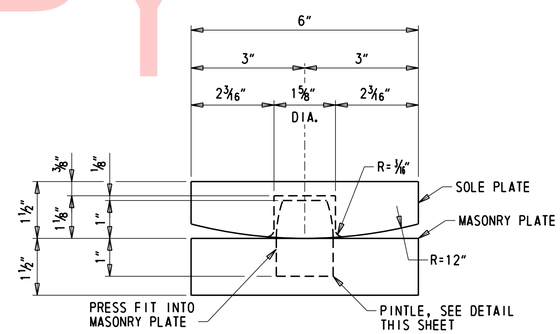

SECTION A-A

6" = 1'-0"

BEARING TABLE

LOCATION	BEARING DESIGNATION					
	MARK	TYPE	TOTAL NO. REQUIRED	CAPACITY PER BEARING		
				SERVICE REACTION ⊗	STRENGTH REACTION ⊗	MOVEMENT ⊠
SPAN 33S, PIER 33S	FS-3	FIX.	2	147.0 KIPS	203.0 KIPS	N/A
SPAN 34S, PIER 34D	FS-3	FIX.	2	135.8 KIPS	188.2 KIPS	N/A
SPAN 35S, PIER 36D	FS-3	FIX.	2	134.5 KIPS	179.6 KIPS	N/A
SPAN 36S, PIER 36D	FS-3	FIX.	2	137.7 KIPS	191.4 KIPS	N/A
SPAN 37S, PIER 38D	FS-3	FIX.	2	168.5 KIPS	225.5 KIPS	N/A
SPAN 38S, PIER 38D	FS-3	FIX.	3	165.2 KIPS	229.6 KIPS	N/A
SPAN 39S, ABUT 40D	FS-3	FIX.	4	173.8 KIPS	233.8 KIPS	N/A
	TOTAL TYPE FS-3		17			

KEY:

⊗ MAX. UN-FACTORED SERVICE 1 REACTION AT LOCATION (INCLUDING DYNAMIC LOAD ALLOWANCE).

⊗ MAX. FACTORED STRENGTH 1 REACTION AT LOCATION (INCLUDING DYNAMIC LOAD ALLOWANCE).

⊠ TEMPERATURE MOVEMENT.

FIXED STEEL PLATE BEARING NOTES:

1. PROVIDE STEEL PLATE FIXED BEARINGS IN ACCORDANCE WITH THE REQUIREMENTS OF SECTION 615 AND IN ACCORDANCE WITH CHAPTER 18 OF THE 2017 AASHTO LRFD BRIDGE CONSTRUCTION SPECIFICATIONS, 4TH EDITION.
2. STEEL SOLE AND MASONRY PLATES SHALL BE AASHTO M 270 GRADE 50. STEEL PLATES SHALL MEET A FLATNESS REQUIREMENT OF 0.5 PERCENT IN THE DIRECTION BEING MEASURED (WIDTH, LENGTH, AND DIAGONAL) MAXIMUM, BUT NOT TO EXCEED ⅛ INCH. STEEL SURFACES OF THE SOLE AND MASONRY PLATES IN CONTACT WITH OTHER SURFACES SHALL BE MACHINE FINISHED TO AT LEAST 250 MICROINCHES ROOT-MEAN-SQUARE.
3. THE BEARING SHALL BE SHOP ASSEMBLED AND MATCH-MARKED TO ENSURE PROPER FIT.
4. SOLE PLATES SHALL BE BEVELED TO MATCH GRADE WHEN GRADE EXCEEDS 1 PERCENT.
5. BEARING SHALL BE PLACED NORMAL TO CENTERLINE OF BEAM. THE SKEW ANGLE BETWEEN THE CENTERLINE OF THE EXISTING BEAMS AND THE CENTERLINE OF BEARING AT THE PIERS VARY BY LOCATION. REFER TO DWG. FR-01 AND FR-02 FOR SKEW ANGLES, IDENTIFIED AS ANGLE A OR ANGLE B.
6. PAYMENT FOR STEEL PLATE FIXED BEARING, INCLUDING ANCHOR BOLTS, WILL BE MADE UNDER ITEM NO. 615001 - STEEL STRUCTURES.
7. ANCHOR BOLTS SHALL BE GRADE 55 AND SIZED TO PROVIDE A MINIMUM OF 1'-3" MIN. EMBEDMENT INTO THE CONCRETE PEDESTAL/CAP.

UNOFFICIAL WEBSITE COPY

N:\31987-004\Contract_Ramp_D\CADD\Bridge\BR1-748S_BB02.dgn
8/23/2019 4:31:08 PM

ADDENDA / REVISIONS	SCALE AS NOTED	REHABILITATION OF I-95, 2ND STREET ON-RAMP IMPROVEMENTS	CONTRACT T201907402	BRIDGE NO. 1 748S 059	BEARING DETAILS FIXED TYPE FS-3	BB-02 SECTION WRA
			COUNTY NEW CASTLE	DESIGNED BY: D. NIZAMOFF		SHEET NO. 82
				CHECKED BY: W. GESCHREI		

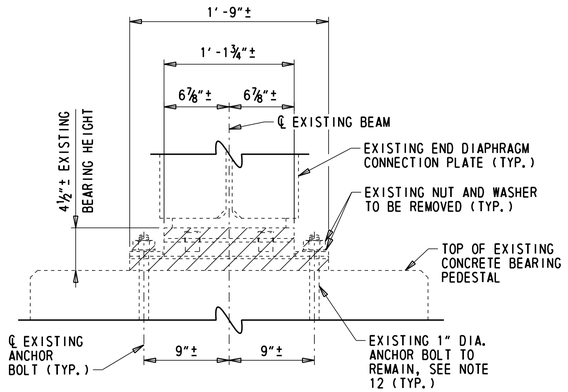

FRONT ELEVATION

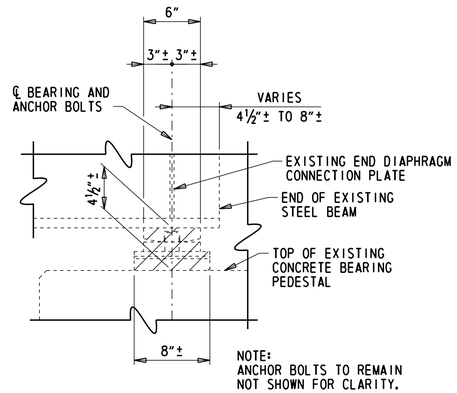

SIDE ELEVATION

EXISTING BEARING REMOVAL DETAIL

1½" = 1'-0"

SUGGESTED SEQUENCE OF REPLACEMENT:

1. FOR THE SUGGESTED SEQUENCE OF CONSTRUCTION FOR JACKING THE BRIDGE AND REPLACING THE BEARING, REFER TO DWG. RH-01. THE FOLLOWING IS THE SUGGESTED SEQUENCE OF INSTALLATION FOR REPLACEMENT BEARINGS FOR BEARING TYPE ES-3:

   A. CLEAN THE EXISTING ANCHOR BOLTS (SEE NOTE 4).
   B. INSTALL THE NEW MASONRY PLATE BY SLIDING IT AROUND THE EXISTING ANCHOR BOLTS AND ONTO THE CONCRETE BEARING PEDESTAL.
   C. WELD THE ANCHOR BOLT SLOT PLUG AT BOTH ANCHOR BOLTS. GRIND THE WELD FLUSH WITH THE TOP OF THE MASONRY PLATE.
   D. INSTALL THE PHOSPHER BRONZE PLATE OVER THE EXISTING ANCHOR BOLTS, ENSURING THE HOLES FOR THE ASTM A307 BOLTS ARE PROPERLY ALIGNED.
   E. PLACE THE GUIDE PLATES IN LOCATION AND ATTACH TO THE MASONRY PLATE AND PHOSPHER BRONZE PLATES WITH ASTM A307 BOLTS. ONCE PLATES ARE ASSEMBLED, INSTALL NEW ANCHOR BOLT HEAVY HEX NUT AND WASHER TO SECURE THE ASSEMBLY TO THE CONCRETE BEARING PEDESTAL.
   F. SET THE SOLE PLATE AND STEEL SLIDING PLATE INTO THE APPROPRIATE LOCATION FOR THE AMBIENT TEMPERATURE. ONCE SET, WELD TO THE BOTTOM FLANGE OF THE STEEL BEAM AS DETAILED.
   G. CAULK THE TRANSVERSE JOINTS BETWEEN THE SOLE PLATE AND THE BOTTOM FLANGE.
   H. APPLY PAINT REPAIRS TO THE EXISTING STEEL BEAM AND PAINT ALL STEEL SURFACES OF THE BEARING WHICH ARE NOT IN CONTACT WITH THE BRONZE SLIDING SURFACE IN ACCORDANCE WITH SECTION 616. DO NOT PAINT THE BRONZE SURFACE.
   I. GREASE THE ENTIRE BEARING ASSEMBLY.

BEARING TABLE

LOCATION	BEARING DESIGNATION					
	MARK	TYPE	TOTAL NO. REQUIRED	CAPACITY PER BEARING		
				SERVICE REACTION ⊗	STRENGTH REACTION ⊗	MOVEMENT 0° TO 110°F ⊠
SPAN 33S, PIER 34D	ES-3	EXP.	2	158.5 KIPS	207.2 KIPS	0.55"
SPAN 33S, PIER 34S	ES-3	EXP.	6	170.7 KIPS	223.2 KIPS	0.55"
SPAN 34S, PIER 35D	ES-3	EXP.	2	134.5 KIPS	179.6 KIPS	0.59"
SPAN 34S, PIER 35S	ES-3	EXP.	6	151.6 KIPS	202.2 KIPS	0.59"
SPAN 35S, PIER 35D	ES-3	EXP.	2	135.8 KIPS	188.2 KIPS	0.60"
SPAN 35S, PIER 35S	ES-3	EXP.	6	153 KIPS	211.8 KIPS	0.59"
SPAN 36S, PIER 37D	ES-3	EXP.	2	136.5 KIPS	183.7 KIPS	0.62"
SPAN 37S, PIER 37D	ES-3	EXP.	2	169.6 KIPS	235.4 KIPS	0.60"
SPAN 37S, PIER 37S	ES-3	EXP.	6	153.3 KIPS	212.5 KIPS	0.59"
SPAN 38S, PIER 39D	ES-3	EXP.	3	164.5 KIPS	220.5 KIPS	0.61"
SPAN 38S, PIER 39S	ES-3	EXP.	1	159.3 KIPS	213.6 KIPS	0.59"
SPAN 39S, PIER 39D	ES-3	EXP.	4	175.5 KIPS	243.8 KIPS	0.62"
SPAN 39S, PIER 39S	ES-3	EXP.	2	166.1 KIPS	230.7 KIPS	0.60"
	TOTAL TYPE ES-3		44			

KEY:

⊗ MAX. UN-FACTORED SERVICE 1 REACTION AT LOCATION (INCLUDING DYNAMIC LOAD ALLOWANCE).

⊗ MAX. FACTORED STRENGTH 1 REACTION AT LOCATION (INCLUDING DYNAMIC LOAD ALLOWANCE).

⊠ TEMPERATURE MOVEMENT.

LEGEND:

PORTIONS OF EXISTING BEARING TO BE REMOVED (ITEM 623500)

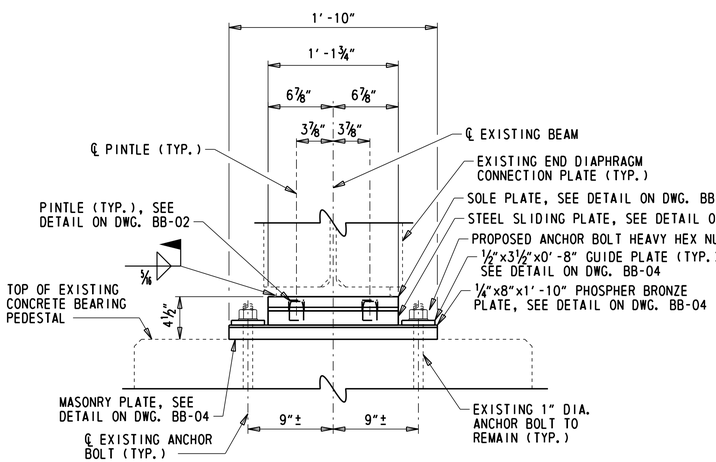

FRONT ELEVATION

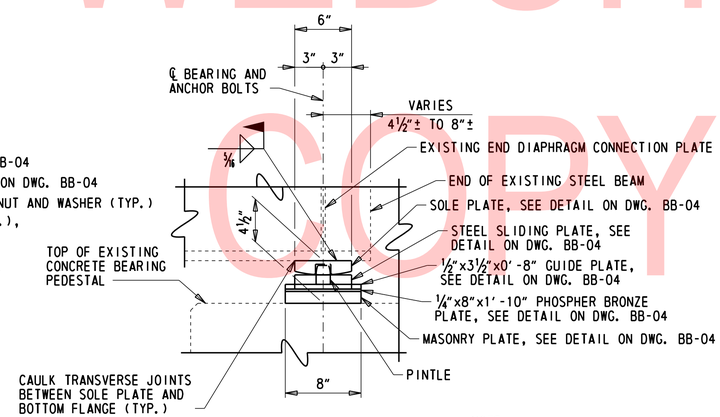

SIDE ELEVATION

NOTE:
ANCHOR BOLTS TO REMAIN NOT SHOWN FOR CLARITY.

BEARING TYPE ES-3

1½" = 1'-0"

NOTES:

1. PROVIDE ALL BEARINGS IN ACCORDANCE WITH THE REQUIREMENTS OF SECTION 615, SPECIAL PROVISION 623500, AND IN ACCORDANCE WITH CHAPTER 18 OF THE 2017 AASHTO LRFD BRIDGE CONSTRUCTION SPECIFICATIONS, 4TH EDITION.
2. CONTRACTOR TO VERIFY ALL EXISTING DIMENSIONS PRIOR TO ORDERING OR FABRICATING BEARINGS.
3. THE EXISTING ANCHOR BOLTS ARE TO REMAIN, UNLESS OTHERWISE NOTED. THE CONTRACTOR SHALL TAKE CARE TO NOT DAMAGE THE ANCHOR BOLTS DURING THE REMOVAL OF THE EXISTING BEARING. ANY ANCHOR BOLTS DAMAGED BY THE CONTRACTOR DURING REMOVAL OF THE EXISTING BEARINGS SHALL BE REPAIRED TO THE SATISFACTION OF THE ENGINEER AND SHALL BE AT THE SOLE EXPENSE OF THE CONTRACTOR.
4. AFTER REMOVAL OF THE EXISTING BEARINGS, THE CONTRACTOR SHALL INSPECT THE EXISTING ANCHOR BOLTS TO REMAIN FOR ANY DEFECTS WHICH MAY ADVERSELY AFFECT THEIR PERFORMANCE. IF THE ENTIRE LINE OF ANCHOR BOLTS EXHIBITS DETERIORATION GREATER THAN 25% OF THE TOTAL CROSS-SECTIONAL AREA, THE CONTRACTOR SHALL STOP WORK AND NOTIFY THE ENGINEER IMMEDIATELY. DETERIORATION LESS THAN 25% OF THE TOTAL CROSS-SECTIONAL AREA OF THE ANCHOR BOLTS IS ACCEPTABLE, IN WHICH CASE THE ANCHOR BOLTS SHALL BE CLEANED AND PAINTED IN ACCORDANCE WITH SECTION 616 PRIOR TO INSTALLING NEW BRONZE BEARINGS. WHEN SECTION LOSS GREATER THAN 25% IS ENCOUNTERED THE CONTINGENT ANCHOR BOLT REPAIR OR REPLACEMENT DETAILS ON DWG. BB-05 SHALL BE USED TO REPAIR THE DETERIORATION.
5. THE BEARING SHALL BE SHOP ASSEMBLED AND MATCH-MARKED TO ENSURE PROPER FIT.
6. SOLE PLATES SHALL BE BEVELED TO MATCH GRADE WHEN GRADE EXCEEDS 1 PERCENT. THE CONTRACTOR IS RESPONSIBLE FOR MEASURING THE GRADE OF THE BRIDGE IN THE FIELD TO DETERMINE THE PROPER BEVEL AT EACH BEARING LOCATION.
7. BEARING SHALL BE PLACED NORMAL TO CENTERLINE OF BEAM. THE SKEW ANGLE BETWEEN THE CENTERLINE OF THE EXISTING BEAMS AND THE CENTERLINE OF BEARING AT THE PIERS VARY BY LOCATION. REFER TO DWG. FR-01 AND FR-02 FOR SKEW ANGLES, IDENTIFIED AS ANGLE A OR ANGLE B.
8. THE CONTRACTOR SHALL PREPARE THE EXISTING CONCRETE BEARING AREA TO ENSURE FULL CONTACT OF THE BEARINGS ON THE CONCRETE PEDESTAL. THE CONTRACTOR MAY USE A NON-SHRINK GROUT LEVELING PAD OR OTHER APPROVED METHOD TO PROVIDE A SMOOTH SURFACE FOR PLACING THE BEARING.
9. PORTIONS OF THE BOTTOM FLANGES OF THE EXISTING STEEL BEAMS TO RECEIVE NEW BEARINGS SHALL BE CLEANED PRIOR TO WELDING. CONTRACTOR SHALL REMOVE THE EXISTING PAINT IN ACCORDANCE WITH SECTION 616 PRIOR TO PERFORMING ANY GRINDING, CUTTING, OR WELDING OF THE EXISTING STRUCTURAL STEEL AS PART OF THIS WORK.
10. ALL FIELD WELDING SHALL BE DONE BY THE SHIELDED METAL-ARC PROCESS. CONTRACTOR SHALL NOT PAINT WELDS PRIOR TO INSPECTION BY THE ENGINEER.
11. ALL PAINT TO BE USED TO TOUCH UP THE EXISTING COATINGS ON THE STRUCTURAL STEEL DAMAGED WHILE WELDING AND REMOVING EXISTING BEARING AND FOR PAINTING NEW BEARING ASSEMBLIES SHALL BE IN ACCORDANCE WITH THE REQUIREMENTS OF SECTION 616. THE COLOR OF THE FINISH COAT SHALL MATCH EXISTING.
12. FILL SLOTS AND HOLES IN STEEL PLATES AROUND ANCHOR BOLTS WITH AN APPROVED NON-HARDENING CAULKING COMPOUND OR ELASTIC JOINT SEALER.
13. PAYMENT FOR BRONZE EXPANSION BEARINGS WILL BE MADE UNDER ITEM 623500 - BRONZE BEARINGS. PAYMENT WILL INCLUDE REMOVAL OF EXISTING BEARINGS, PREPARATION OF THE CONCRETE BEARING AREA, FABRICATING AND INSTALLING NEW BEARINGS, WELDING, ANCHOR BOLTS AT PROPOSED GIRDER LOCATIONS, PAINTING, AND ANY OTHER INCIDENTALS NECESSARY TO COMPLETE THE WORK.
14. AT NEW PIERS 1" DIA. SWEDGED ANCHOR BOLTS SHALL BE SUPPLIED WITH THE BEARINGS. ANCHOR BOLTS SHALL BE GRADE 55 AND SIZED TO PROVIDE A MINIMUM OF 1'-3" EMBEDMENT INTO THE CONCRETE PEDESTAL/CAP.

UNOFFICIAL WEBSITE COPY

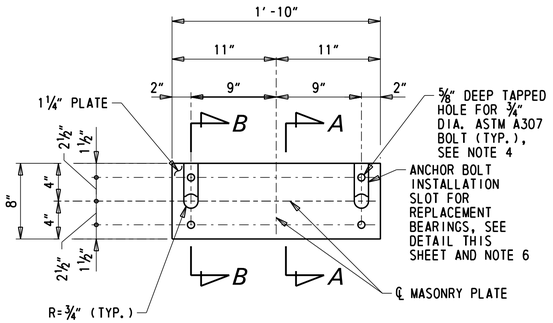

MASONRY PLATE DETAIL

1½" = 1'-0"

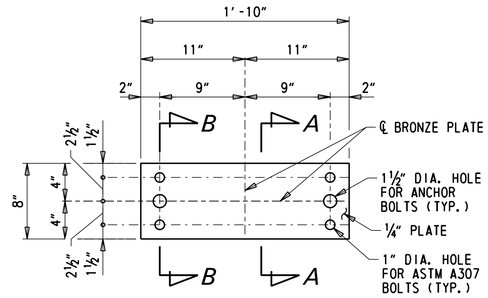

PHOSPHER BRONZE PLATE DETAIL

1½" = 1'-0"

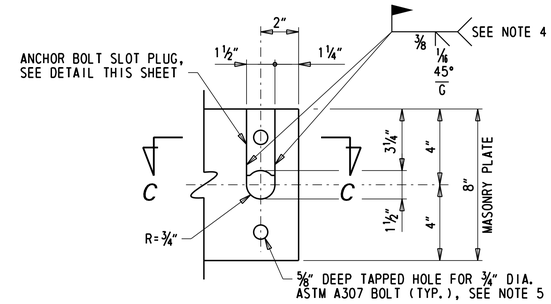

ANCHOR BOLT INSTALLATION SLOT DETAIL

3" = 1'-0"

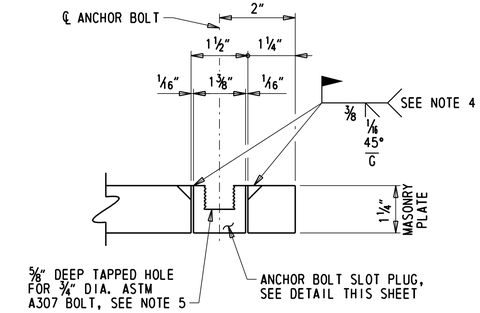

SECTION C-C

6" = 1'-0"

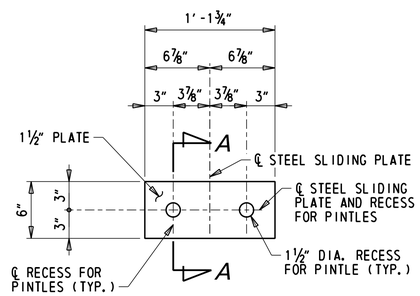

STEEL SLIDING PLATE DETAIL

1½" = 1'-0"

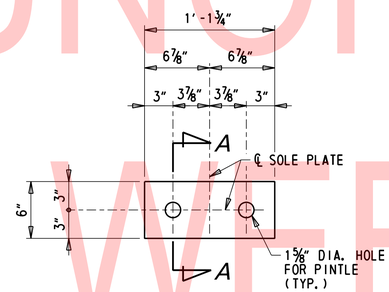

SOLE PLATE DETAIL

1½" = 1'-0"

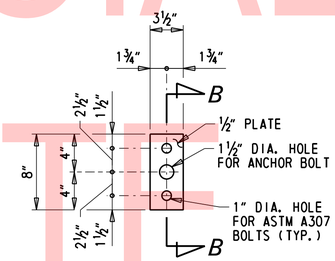

GUIDE PLATE DETAIL

1½" = 1'-0"

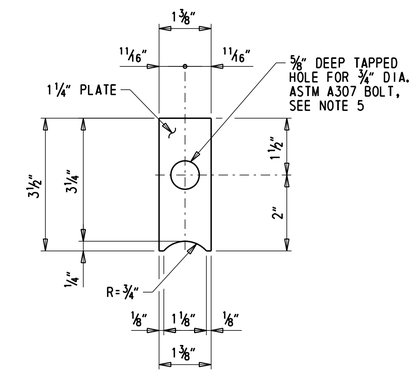

ANCHOR BOLT SLOT PLUG DETAIL

6" = 1'-0"

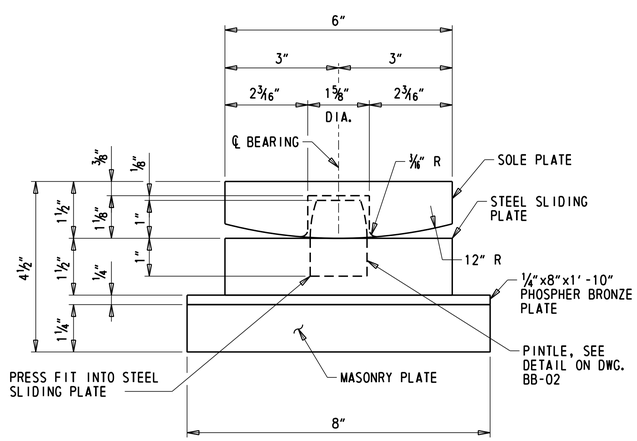

SECTION A-A

6" = 1'-0"

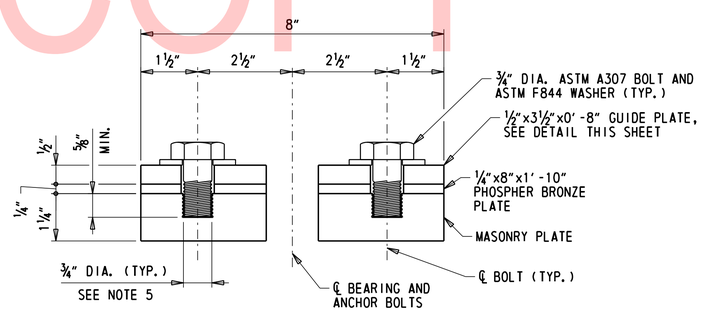

SECTION B-B

6" = 1'-0"

UNOFFICIAL WEBSITE COPY

NOTES:

1. FOR ADDITIONAL BRONZE BEARING NOTES, SEE DWG. BB-03.
2. FOR ADDITIONAL DETAILS ON THE ES-3 BEARING, SEE DWG. BB-03.
3. FOR SUGGESTED SEQUENCE OF REPLACEMENT FOR BEARING TYPE ES-3, SEE DWG. BB-03.
4. THE MASONRY PLATE OF THE PROPOSED BEARINGS SHALL BE INSTALLED BY PROVIDING ANCHOR BOLT SLOTS IN THE PLATE TO ALLOW IT TO SLIDE INTO POSITION AROUND THE EXISTING ANCHOR BOLTS. THIS IS DUE TO THE ANCHOR BOLTS EXTENDING TO NEAR THE BOTTOM FLANGE OF THE EXISTING BEAMS. AFTER THE MASONRY PLATE IS SET AROUND THE ANCHOR BOLTS, INSTALL THE ANCHOR BOLT SLOT PLUG, WELD IN PLACE, THEN GRIND THE WELDS SMOOTH WITH THE TOP OF THE MASONRY PLATE.
5. HOLES IN THE MASONRY PLATE AND ANCHOR BOLT SLOT PLUG SHALL BE TAPPED TO RECEIVE THE ¾" DIAMETER ASTM A307 BOLTS.
6. ANCHOR BOLT INSTALLATION SLOT SHALL ONLY BE PROVIDED ON REPLACEMENT BEARINGS. BEARINGS FOR NEW GIRDERS AT PIER 34D THROUGH 39D SHALL HAVE A 1½" DIAMETER HOLE.

N:\31987-004\Contract_Ramp_D\CADD\Bridge\BRI-7485_BB04.dgn
8/23/2019 4:31:10 PM

ADDENDA / REVISIONS	SCALE AS NOTED	REHABILITATION OF I-95, 2ND STREET ON-RAMP IMPROVEMENTS	CONTRACT T201907402	BRIDGE NO. 1 748S 059	BEARING DETAILS EXPANSION TYPE ES-3 2 OF 2	BB-04
			COUNTY NEW CASTLE	DESIGNED BY: D. NIZAMOFF		SECTION WRA
				CHECKED BY: W. GESCHREI		SHEET NO. 84

REINFORCING BAR LIST				
MARK	SIZE	NUMBER	TYPE	LENGTH
PR401	4		17	3'-10"
PR402	4		STR	3'-2"

BENDING DIAGRAMS

(17)

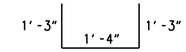

NOTES:

1. FOR ANCHOR BOLT REPLACEMENT CRITERIA, SEE STEEL SLIDING PLATE AND BRONZE EXPANSION BEARING NOTES ON DWGS. BB-02 AND BB-03.
2. ALL COST ASSOCIATED WITH REPAIR OF EXISTING ANCHOR BOLTS SHALL BE PAID FOR UNDER ITEM NO. 623003 - REPLACE ANCHOR BOLTS.
3. IN LIEU OF THE 'WELDED ANCHOR BOLT REPAIR DETAIL' SHOWN ON THIS SHEET, THE CONTRACTOR MAY ELECT TO USE THE 'ANCHOR BOLT REPLACEMENT' ALTERNATE AT NO ADDITIONAL COST TO THE DEPARTMENT.

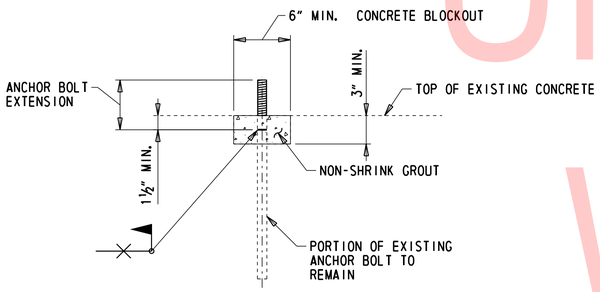

WELDED ANCHOR BOLT REPAIR DETAIL

1½" = 1'-0"

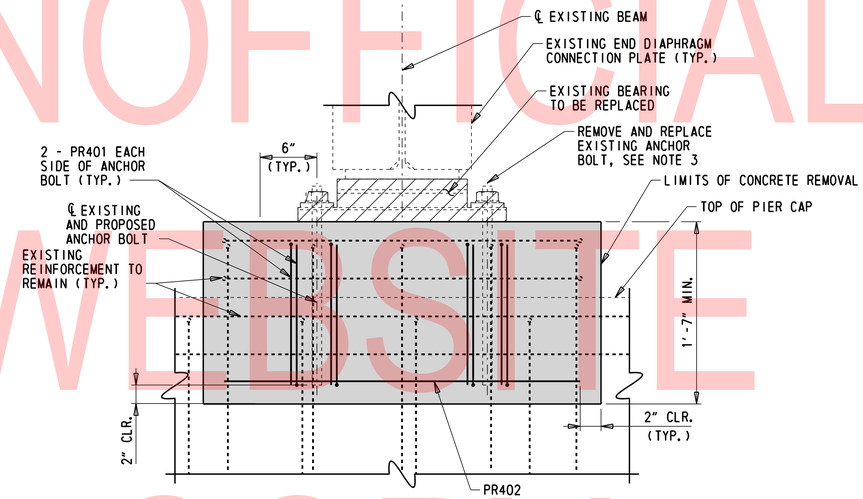

ELEVATION

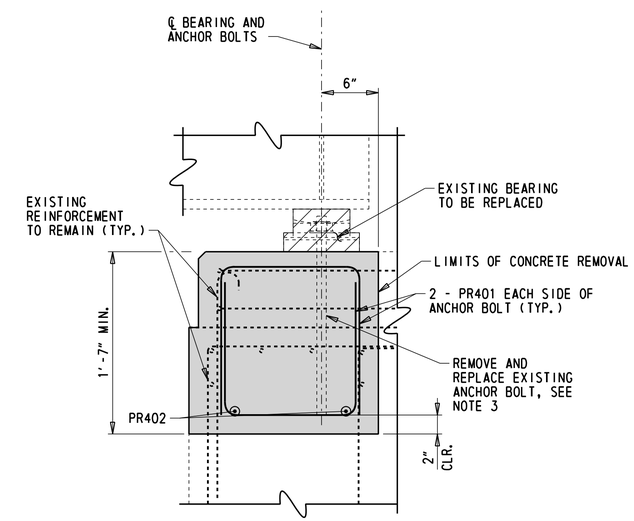

SECTION

NOTE: EXISTING REINFORCEMENT MAY VARY, CONTRACTOR MAY SUBMIT ALTERNATE DETAIL.

ANCHOR BOLT REPLACEMENT ALTERNATE

1½" = 1'-0"

WELDED ANCHOR BOLT REPAIR PROCEDURE:

1. PROVIDE A 6" MIN. SQUARE CONCRETE BLOCKOUT AROUND THE PERIMETER OF EXISTING ANCHOR BOLT TO THE DEPTH SHOWN.
2. REMOVE EXISTING ANCHOR BOLT TO THE LIMIT SHOWN.
3. WELD PROPOSED ANCHOR BOLT EXTENSION TO EXISTING ANCHOR BOLT PROVIDE MATERIALS AND PERFORM WORK IN ACCORDANCE WITH AASHTO/AWS D1.5M/1.5:2015 BRIDGE WELDING CODE, AND CONTRACT DOCUMENTS. ALL GROOVE AND BUTT WELDS SHALL BE COMPLETE PENETRATION UNLESS NOTED OTHERWISE. ALL WELDS SHALL BE SUBJECT TO NON-DESTRUCTIVE TESTING AS SPECIFIED IN THE BRIDGE WELDING CODE, AWS D1.5.
4. FILL CONCRETE BLOCK-OUT WITH NON-SHRINK GROUT.

ANCHOR BOLT REPLACEMENT ALTERNATE NOTES:

1. A 1" DEEP SAW CUT SHALL BE MADE INTO THE EXPOSED FACE OF EXISTING SOUND CONCRETE TO ESTABLISH A NEAT LINE AT THE LIMIT OF REMOVAL. HAND REMOVAL OF CONCRETE SHALL BE PERFORMED WHERE ADEQUATE CLEARANCE IS NOT AVAILABLE. CONCRETE SHALL BE FORMED ADJACENT TO THE EXISTING CONCRETE TO PRODUCE A SMOOTH SURFACE.
2. DAMAGE TO THE EXISTING STRUCTURE TO REMAIN SHALL BE REPAIRED OR REPLACED AT NO ADDITIONAL COST TO THE DEPARTMENT.
3. ANCHOR BOLTS SHALL BE GRADE 55 AND SIZED TO PROVIDE A MINIMUM OF 1'-5" MIN. EMBEDMENT INTO THE CONCRETE PEDESTALS/CAP.
4. THE NEW CONCRETE PEDESTAL AND BEAM SEAT SHALL BE PLACED MONOLITHICALLY. THE DIMENSIONS SHALL MATCH THE EXISTING.
5. THE TEMPORARY BEAM SUPPORT SHALL NOT BE REMOVED UNTIL THE NEW CONCRETE REACHES A MINIMUM COMPRESSIVE STRENGTH OF 3000 PSI.

LEGEND:

LIMITS OF EXISTING CONCRETE REMOVAL AND NEW CLASS A CONCRETE

UNOFFICIAL WEBSITE COPY

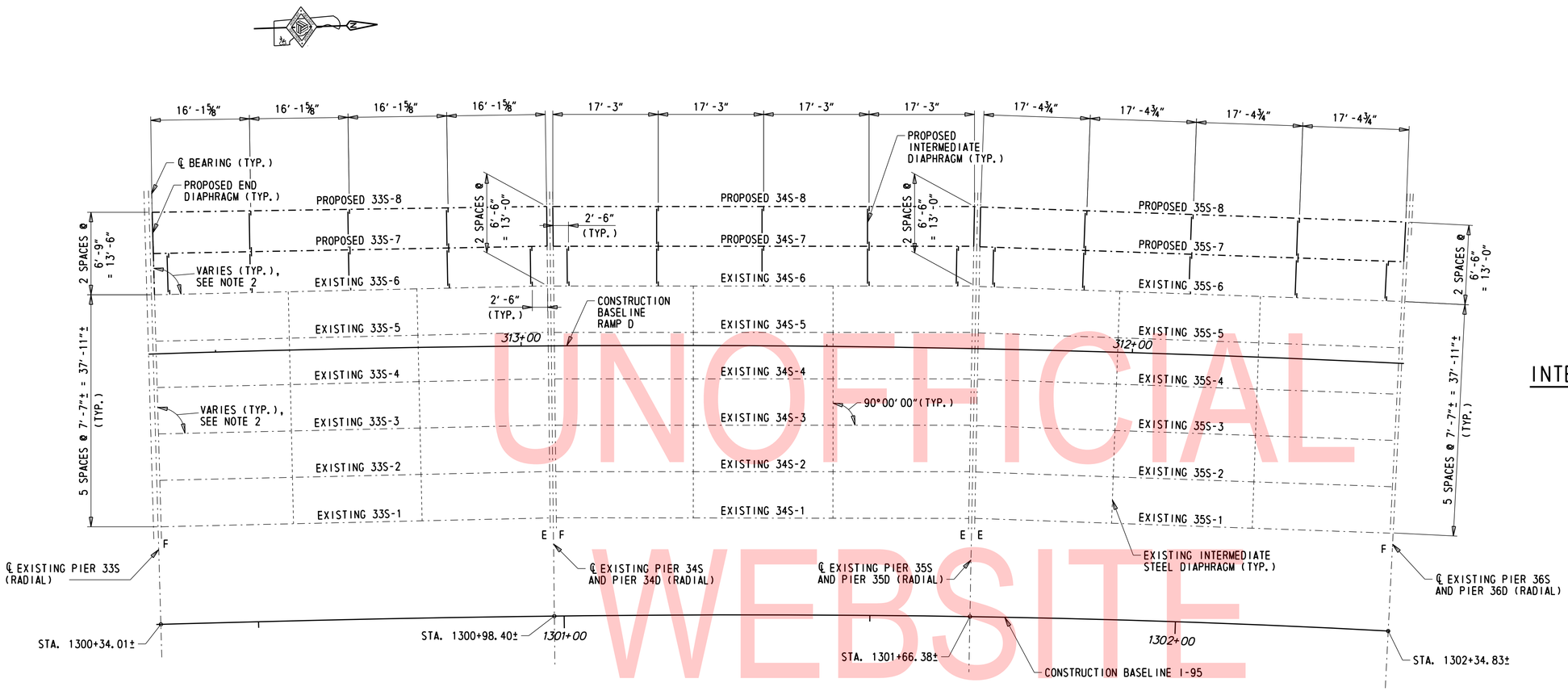

FRAMING PLAN - SPANS 33S TO 35S

1" = 10'

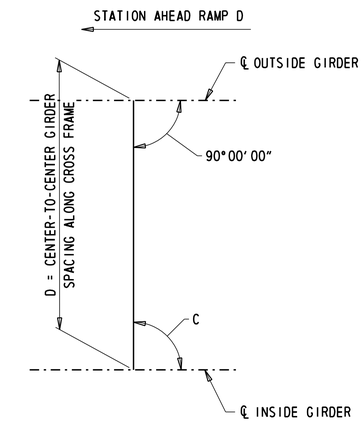

INTERMEDIATE DIAPHRAGM SCHEMATIC

NOT TO SCALE

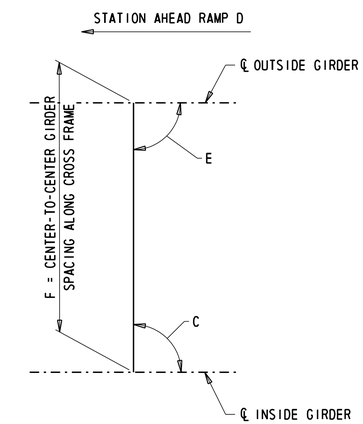

BAY 6 END DIAPHRAGM SCHEMATIC

NOT TO SCALE

GIRDER SCHEDULE			
PROPOSED GIRDER	ANGLE "A"	ANGLE "B"	LENGTH FROM C/C BEARING
33S-7	90°33'38"	90°25'47"	64'-5⅛"
33S-8	90°46'56"	90°12'28"	64'-6½"
34S-7	90°38'50"	91°04'04"	68'-9½"
34S-8	90°38'52"	91°04'02"	68'-11⅞"
35S-7	90°57'39"	90°51'35"	69'-4⅝"
35S-8	90°57'39"	90°51'35"	69'-7"

END DIAPHRAGM SCHEDULE - BAY 6				
	DIAPHRAGM	BAY BETWEEN S-5 AND S-6		
		E	F	G
SPAN 33	1	90°20'18"	6'-8⅞"	89°26'20"
	2	90°25'44"	6'-6⅛"	89°20'55"
SPAN 34	1	90°38'46"	6'-6"	89°21'10"
	2	88°55'53"	6'-6"	91°04'04"
SPAN 35	1	90°57'40"	6'-6"	89°02'21"
	2	89°08'27"	6'-6"	90°51'34"

INTERMEDIATE DIAPHRAGM SCHEDULE					
	DIAPHRAGM	BAY BETWEEN S-6 AND S-7		BAY BETWEEN S-7 AND S-8	
		C	D	C	D
SPAN 33	1	89°46'39"	6'-8¼"	89°46'41"	6'-8¼"
	2	89°46'39"	6'-7½"	89°46'41"	6'-7½"
	3	89°46'39"	6'-6¾"	89°46'41"	6'-6¾"
SPAN 34	1	90°00'00"	6'-6"	90°00'00"	6'-6"
	2	90°00'00"	6'-6"	90°00'00"	6'-6"
	3	90°00'00"	6'-6"	90°00'00"	6'-6"
SPAN 35	1	90°00'00"	6'-6"	90°00'00"	6'-6"
	2	90°00'00"	6'-6"	90°00'00"	6'-6"
	3	90°00'00"	6'-6"	90°00'00"	6'-6"

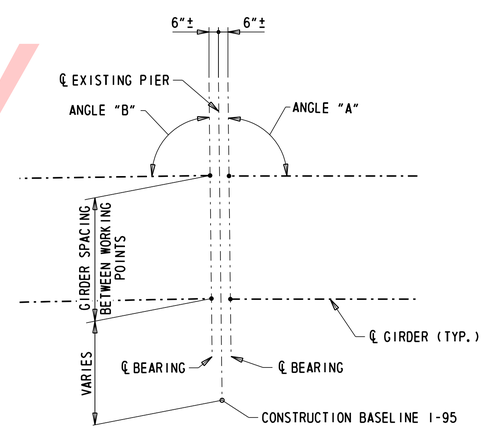

KEY DIAGRAM - PIERS 33D THROUGH ABUTMENT 40D

¼" = 1'-0"

NOTES:

1. DIMENSIONS FOR DIAPHRAGM SPACING ARE MEASURED ALONG PROPOSED EXTERIOR FASCIA STRINGER.
2. EXISTING AND PROPOSED END DIAPHRAGMS TO BE PARALLEL TO THE CENTERLINE OF BEARING AT ALL LOCATIONS.
3. FOR INTERMEDIATE DIAPHRAGM DETAILS, SEE DWG. BM-05.
4. FOR END DIAPHRAGM DETAILS, SEE DWG. SD-01.

UNOFFICIAL WEBSITE COPY

N:\31987-004\Contract_Ramp_D\CADD\Bridge\BR1-748S_FR01.dgn
8/23/2019 4:31:11 PM

ADDENDA / REVISIONS	

REHABILITATION OF I-95, 2ND STREET ON-RAMP IMPROVEMENTS

CONTRACT	BRIDGE NO.	1 748S 059
T201907402	DESIGNED BY: D. NIZAMOFF	
COUNTY	CHECKED BY: W. GESCHREI	
NEW CASTLE		

FRAMING PLAN 1 OF 2

FR-01
SECTION
WRA
SHEET NO.
86

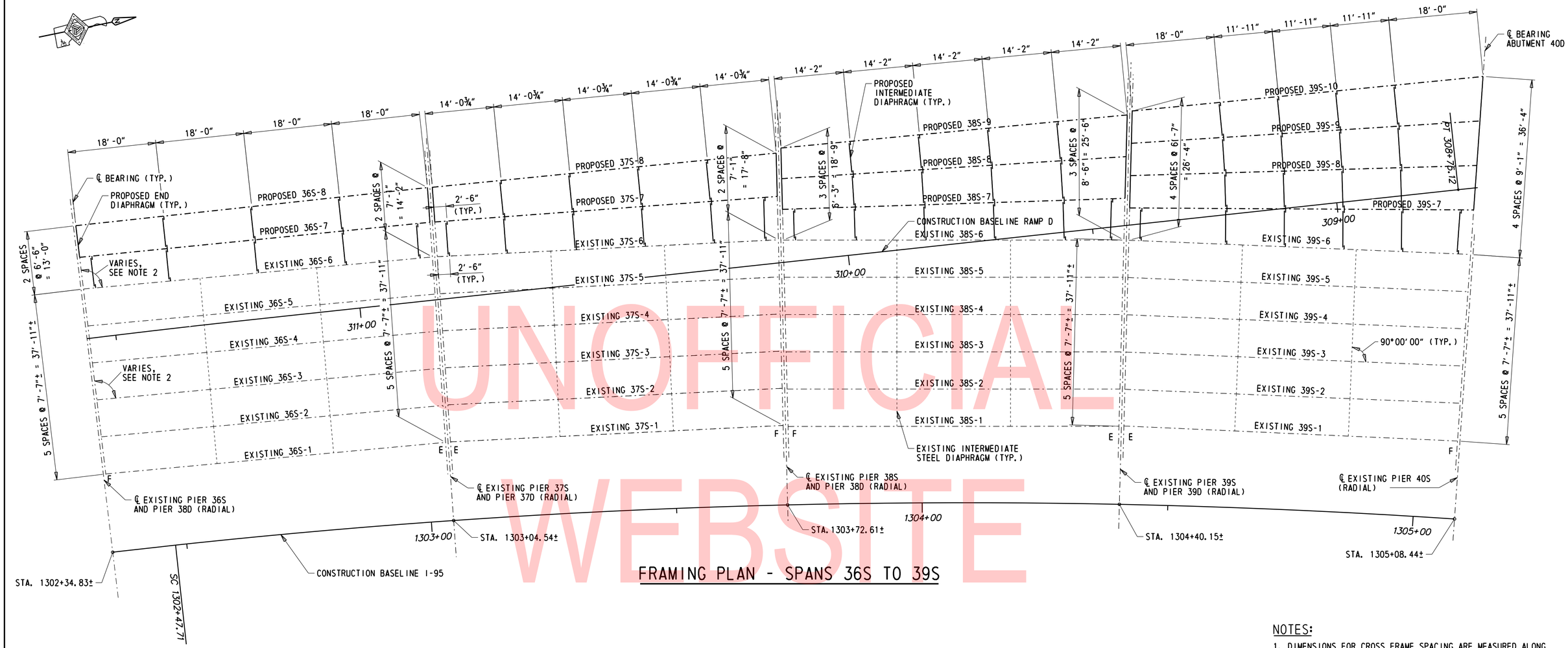

FRAMING PLAN - SPANS 36S TO 39S

UNOFFICIAL WEBSITE COPY

GIRDER SCHEDULE			
PROPOSED GIRDER	ANGLE "A"	ANGLE "B"	LENGTH FROM C/C BEARING
36S-7	91°09′12″	91°38′14″	71′-7⅞″
36S-8	90°41′25″	92°06′00″	71′-11⅞″
37S-7	89°48′50″	92°47′28″	69′-10¾″
37S-8	88°23′48″	94°12′30″	70′-4″
38S-7	89°37′40″	93°21′30″	69′-9⅛″
38S-8	87°48′15″	95°10′55″	70′-3″
38S-9	86°00′29″	96°58′41″	70′-9⅞″
39S-7	88°49′26″	93°37′50″	70′-0⅜″
39S-8	86°48′23″	95°41′26″	70′-6⅜″
39S-9	84°49′10″	97°40′40″	71′-1¼″
39S-10	82°52′00″	99°37′50″	71′-9⅛″

INTERMEDIATE DIAPHRAGM SCHEDULE									
	DIAPHRAGM	BAY BETWEEN S-6 AND S-7		BAY BETWEEN S-7 AND S-8		BAY BETWEEN S-8 AND S-9		BAY BETWEEN S-9 AND S-10	
		C	D	C	D	C	D	C	D
SPAN 36S	1	90°28′02″	6′-7¾″	90°27′47″	6′-7¾″				
	2	90°28′02″	6′-9½″	90°27′47″	6′-9½″				
	3	90°28′02″	6′-11¼″	90°27′47″	6′-11¼″				
SPAN 37S	1	91°26′02″	7′-5⅜″	91°25′02″	7′-5⅜″				
	2	91°26′02″	7′-9½″	91°25′02″	7′-9⅜″				
	3	91°26′02″	8′-1¾″	91°25′02″	8′-1⅜″				
	4	91°26′02″	8′-6″	91°25′02″	8′-5¾″				
SPAN 38S	1	91°50′51″	6′8¾″	91°49′25″	6′-8⅝″	91°47′47″	6′-8⅛″		
	2	91°50′51″	7′-2¼″	91°49′25″	7′-2″	91°47′47″	7′-1⅝″		
	3	91°50′51″	7′-7¾″	91°49′25″	7′-7⅛″	91°47′47″	7′-7″		
	4	91°50′51″	8′-1¼″	91°49′25″	8′-0⅞″	91°47′47″	8′-0⅛″		
SPAN 39S	1	92°02′36″	7′-3½″	92°01′03″	7′-3¼″	91°59′14″	7′-2¾″	91°57′10″	7′-2⅛″
	2	92°02′36″	7′-8⅝″	92°01′03″	7′-8⅜″	91°59′14″	7′-7¾″	91°57′10″	7′-6⅝″
	3	92°02′36″	8′-1¾″	92°01′03″	8′-1⅜″	91°59′14″	8′-0⅛″	91°57′10″	7′-11⅞″
	4	92°02′36″	8′-6⅞″	92°01′03″	8′-6⅜″	91°59′14″	8′-5⅛″	91°57′10″	8′-4¾″

NOTES:

1. DIMENSIONS FOR CROSS FRAME SPACING ARE MEASURED ALONG PROPOSED EXTERIOR FASCIA STRINGER.
2. EXISTING AND PROPOSED END DIAPHRAGMS TO BE PARALLEL TO THE CENTERLINE OF BEARING AT ALL LOCATIONS.
3. REFER TO FR-01 FOR KEY DIAGRAM, INTERMEDIATE DIAPHRAGM SCHEMATIC, AND BAY 6 END DIAPHRAGM SCHEMATIC.

END DIAPHRAGM SCHEDULE - BAY 6				
	DIAPHRAGM	BAY BETWEEN S-5 AND S-6		
		E	F	G
SPAN 36	1	91°36′59″	6′-6¼″	88°51′04″
	2	88°49′34″	7′-¾″	91°38′28″
SPAN 37	1	91°49′34″	7′-1¾″	90°11′26″
	2	88°38′09″	8′-9¼″	92°47′53″
SPAN 38	1	91°28′06″	6′-3⅝″	90°22′45″
	2	88°27′57″	8′-5⅛″	93°22′54″
SPAN 39	1	91°01′40″	6′-8⅛″	91°00′56″
	2	88°20′38″	8′-11⅝″	93°41′58″

ADDENDA / REVISIONS

REHABILITATION OF I-95, 2ND STREET ON-RAMP IMPROVEMENTS

CONTRACT	BRIDGE NO. 1 748S 059	FRAMING PLAN 2 OF 2	FR-02
T201907402	DESIGNED BY: D. NIZAMOFF		SECTION WRA
COUNTY			SHEET NO.
NEW CASTLE	CHECKED BY: W. GESCHREI		87

N:\31987-004\Contract_Ramp_D\CADD\Bridge\BR1-748S_FR02.dgn
8/23/2019 4:35:12 PM

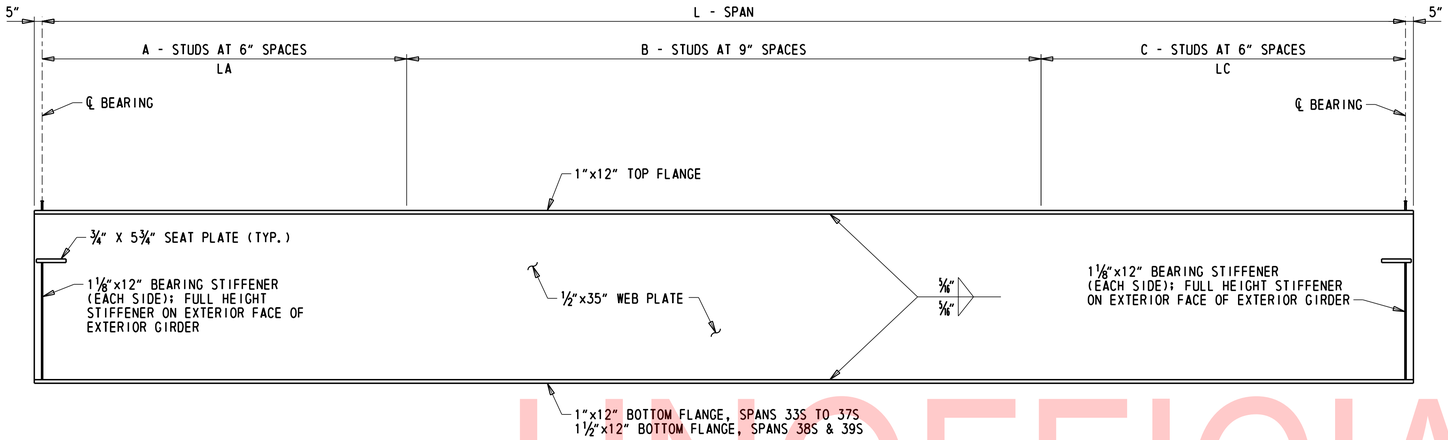

GIRDER ELEVATION

NOT TO SCALE

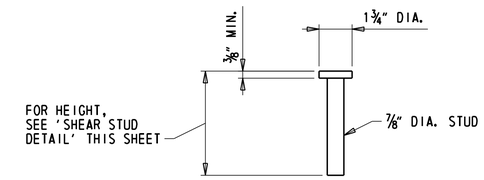

STUD DETAIL

3" = 1'-0"

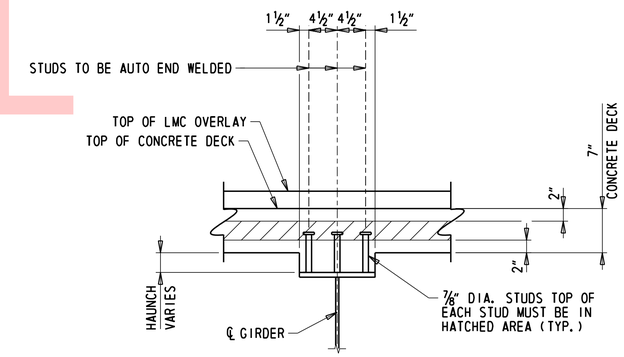

SHEAR STUD DETAIL

1" = 1'-0"

GIRDER SUMMARY

GIRDER	L - SPAN	LA	ROWS OF STUDS 3 STUDS PER ROW			LC
			A	B	C	
33S-7	64'-5⅛"	6'-6"	14	69	14	6'-6"
33S-8	64'-6½"	6'-6"	14	69	14	6'-6"
34S-7	68'-9½"	7'-0"	15	74	15	7'-0"
34S-8	68'-11 11/16"	7'-0"	15	74	15	7'-0"
35S-7	69'-4 9/16"	7'-0"	15	74	15	7'-0"
35S-8	69'-7 1/16"	7'-0"	15	75	15	7'-0"
36S-7	71'-7⅞"	7'-0"	15	77	15	7'-0"
36S-8	71'-11⅞"	7'-0"	15	78	15	7'-0"
37S-7	69'-10 11/16"	7'-0"	15	75	15	7'-0"
37S-8	70'-3 15/16"	7'-6"	16	74	16	7'-6"
38S-7	69'-9⅛"	7'-0"	15	75	15	7'-0"
38S-8	70'-3 1/16"	7'-6"	16	74	16	7'-6"
38S-9	70'-9 11/16"	7'-6"	16	75	16	7'-6"
39S-7	70'-0 7/16"	7'-6"	16	74	16	7'-6"
39S-8	70'-6 3/16"	7'-6"	16	75	16	7'-6"
39S-9	71'-1¼"	7'-6"	16	75	16	7'-6"
39S-10	71'-9 3/16"	7'-6"	16	76	16	7'-6"

NOTES:

1. THE GIRDERS SHALL BE PLUMB UNDER FULL DEAD LOAD.
2. THE CONTRACTOR IS RESPONSIBLE FOR THE ENTIRE ERECTION OF THE BRIDGE. THE CONTRACTOR SHALL SUBMIT DRAWINGS SEALED BY A PROFESSIONAL ENGINEER REGISTERED IN THE STATE OF DELAWARE, ILLUSTRATING FULLY THE PROPOSED METHOD OF ERECTION. THE DRAWINGS SHALL SHOW DETAILS OF ALL TEMPORARY SHORING, FALSEWORK, BRACING, GUYS, DEAD-MEN, LIFTING DEVICES AND ATTACHMENT TO BRIDGE MEMBERS. THE DRAWINGS SHALL ALSO INCLUDE THE SEQUENCE OF ERECTION, LOCATION OF CRANES, CRANE CAPACITIES, LOCATION OF LIFTING POINTS ON THE BRIDGE MEMBERS AND WEIGHTS OF MEMBERS. THE PLANS AND DRAWINGS SHALL BE COMPLETE IN DETAIL FOR ALL ANTICIPATED PHASES AND CONDITIONS DURING ERECTION.
3. THERE SHALL BE NO FIELD WELDING TO THE TOP FLANGE, EXCEPT FOR SHEAR STUDS.
4. DIAPHRAGM CONNECTION PLATES SPACING NOT SHOWN, FOR LOCATION OF DIAPHRAGM CONNECTION PLATES, SEE DWGS. FR-01 AND FR-02.
5. FOR BEARING STIFFENER, CONNECTION PLATE, AND INTERMEDIATE DIAPHRAGM DETAILS, SEE DWG. BM-05.

UNOFFICIAL WEBSITE COPY

N:\31987-004\Contract_Ramp_D\CADD\Bridge\BR1-748S_BM01.dgn
8/23/2019 4:31:13 PM

ADDENDA / REVISIONS	SCALE AS NOTED	REHABILITATION OF I-95, 2ND STREET ON-RAMP IMPROVEMENTS	CONTRACT T201907402	BRIDGE NO. 1 748S 059	GIRDER DETAILS	BM-01
			COUNTY NEW CASTLE	DESIGNED BY: D. NIZAMOFF		SECTION WRA
				CHECKED BY: W. GESCHREI		SHEET NO. 88

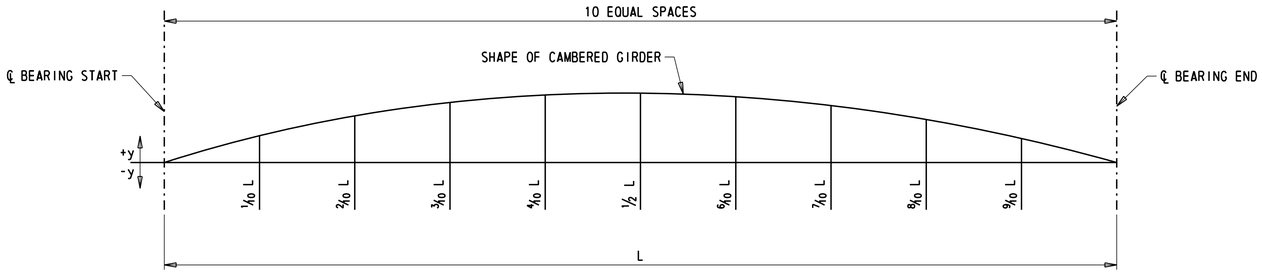

DEFLECTION AND TOTAL CAMBER (INCHES)

PROPOSED GIRDERS		℄ BRG. START PIER 33S	1/10 L	2/10 L	3/10 L	4/10 L	5/10 L	6/10 L	7/10 L	8/10 L	9/10 L	℄ BRG. START PIER 34S
GIRDER 33S-7	DSL	0	1/16	1/8	3/16	3/16	1/4	3/16	3/16	1/8	1/16	0
	DLC	0	1/4	1/2	11/16	13/16	13/16	13/16	11/16	1/2	1/4	0
	SDL1	0	1/16	1/8	3/16	3/16	3/16	3/16	3/16	1/8	1/16	0
	SDL2	0	1/16	1/16	1/8	1/8	1/8	1/8	1/8	1/16	1/16	0
	TD&C	0	7/16	13/16	1 3/16	1 5/16	1 3/8	1 5/16	1 3/16	13/16	7/16	0
	VCO	0	0	0	-1/8	-3/16	-5/16	-3/8	-5/16	-3/16	-1/8	0
	TD&C + VCO	0	7/16	13/16	1 1/16	1 1/8	1 1/16	15/16	7/8	5/8	5/16	0
GIRDER 33S-8	DSL	0	1/16	1/8	3/16	3/16	1/4	3/16	3/16	1/8	1/16	0
	DLC	0	5/16	9/16	13/16	15/16	1	15/16	13/16	9/16	5/16	0
	SDL1	0	1/8	3/16	1/4	1/4	5/16	1/4	1/4	3/16	1/8	0
	SDL2	0	1/16	1/8	1/8	3/16	3/16	3/16	1/8	1/8	1/16	0
	TD&C	0	9/16	1	1 3/8	1 9/16	1 3/4	1 9/16	1 3/8	1	9/16	0
	VCO	0	0	0	-1/8	-3/16	-1/4	-3/8	-1/4	-3/16	-1/8	0
	TD&C + VCO	0	9/16	1	1 1/4	1 3/8	1 1/2	1 3/16	1 1/8	13/16	7/16	0

DEFLECTION AND TOTAL CAMBER (INCHES)

PROPOSED GIRDERS		℄ BRG. START PIER 34S	1/10 L	2/10 L	3/10 L	4/10 L	5/10 L	6/10 L	7/10 L	8/10 L	9/10 L	℄ BRG. START PIER 35S
GIRDER 34S-7	DSL	0	1/8	3/16	1/4	1/4	5/16	1/4	1/4	3/16	1/8	0
	DLC	0	3/8	5/8	7/8	1	1 1/16	1	7/8	5/8	3/8	0
	SDL1	0	1/16	1/8	3/16	1/4	1/4	1/4	3/16	1/8	1/16	0
	SDL2	0	1/16	1/8	1/8	3/16	3/16	3/16	1/8	1/8	1/16	0
	TD&C	0	5/8	1 1/16	1 7/16	1 11/16	1 13/16	1 11/16	1 7/16	1 1/16	5/8	0
	VCO	0	1/8	1/4	5/16	1/4	1/4	3/16	1/8	1/16	1/16	0
	TD&C + VCO	0	3/4	1 5/16	1 3/4	1 15/16	2 1/16	1 7/8	1 9/16	1 1/8	11/16	0
GIRDER 34S-8	DSL	0	1/8	3/16	1/4	1/4	5/16	1/4	1/4	3/16	1/8	0
	DLC	0	7/16	3/4	1	1 3/16	1 1/4	1 3/16	1 1/16	3/4	7/16	0
	SDL1	0	1/8	1/4	5/16	3/8	3/8	3/8	5/16	1/4	1/8	0
	SDL2	0	1/16	1/8	3/16	1/4	1/4	1/4	3/16	1/8	1/16	0
	TD&C	0	3/4	1 5/16	1 3/4	2 1/16	2 3/16	2 1/16	1 13/16	1 5/16	3/4	0
	VCO	0	1/8	1/4	5/16	1/4	1/4	3/16	1/8	1/16	1/16	0
	TD&C + VCO	0	7/8	1 9/16	2 1/16	2 5/16	2 7/16	2 1/4	1 15/16	1 3/8	13/16	0

DEFLECTION AND TOTAL CAMBER (INCHES)

PROPOSED GIRDERS		℄ BRG. START PIER 35S	1/10 L	2/10 L	3/10 L	4/10 L	5/10 L	6/10 L	7/10 L	8/10 L	9/10 L	℄ BRG. START PIER 36S
GIRDER 35S-7	DSL	0	1/8	3/16	1/4	1/4	5/16	5/16	1/4	3/16	1/8	0
	DLC	0	3/8	11/16	7/8	1 1/16	1 1/8	1 1/16	15/16	11/16	3/8	0
	SDL1	0	1/16	3/16	3/16	1/4	1/4	1/4	3/16	3/16	1/16	0
	SDL2	0	1/16	1/8	1/8	3/16	3/16	3/16	1/8	1/8	1/16	0
	TD&C	0	5/8	1 3/16	1 7/16	1 3/4	1 7/8	1 13/16	1 1/2	1 3/16	5/8	0
	VCO	0	3/8	11/16	13/16	13/16	3/4	11/16	5/8	7/16	3/16	0
	TD&C + VCO	0	1	1 7/8	2 1/4	2 9/16	2 5/8	2 1/2	2 1/8	1 5/8	13/16	0
GIRDER 35S-8	DSL	0	1/8	3/16	1/4	5/16	5/16	5/16	1/4	3/16	1/8	0
	DLC	0	7/16	3/4	1	1 3/16	1 1/4	1 1/4	1 1/16	3/4	7/16	0
	SDL1	0	1/8	1/4	5/16	3/8	3/8	3/8	5/16	1/4	1/8	0
	SDL2	0	1/16	1/8	3/16	1/4	1/4	1/4	3/16	1/8	1/16	0
	TD&C	0	3/4	1 5/16	1 3/4	2 1/8	2 3/16	2 3/16	1 13/16	1 5/16	3/4	0
	VCO	0	1/2	15/16	1 3/16	1 1/8	1	7/8	3/4	1/2	1/4	0
	TD&C + VCO	0	1 1/4	2 1/4	2 15/16	3 1/4	3 3/16	3 1/16	2 9/16	1 13/16	1	0

STEEL GIRDER CAMBER NOTES:

1. ALL GIRDERS SHALL BE CAMBERED FOR DEAD LOAD ORDINATES TO THE DIMENSIONS SHOWN ON THESE PLANS. THE CAMBER TOLERANCE IS ZERO UNDER TO ¾ INCH OVER.
2. AFTER THE ERECTION OF STEEL AND THE CONNECTIONS OF THE STEEL DIAPHRAGMS ARE COMPLETE, THE CONTRACTOR SHALL OBTAIN ELEVATIONS AT THE POINTS SHOWN ON THE TOP FLANGES OF ALL GIRDERS TO DETERMINE THE REQUIRED HAUNCH THICKNESS. ALL THE DATA SHALL BE SUBMITTED WITH DETAILS OF STAY-IN-PLACE FORMS FOR REVIEW AND APPROVAL BY THE ENGINEER IN THE FIELD.
3. AFTER THE ERECTION OF STEEL AND THE CONNECTIONS OF THE STEEL DIAPHRAGMS ARE COMPLETE, THE CONTRACTOR SHALL VERIFY THAT ALL UNDER CLEARANCES ARE SUFFICIENT AFTER SUBTRACTING THE CALCULATED TOTAL DEAD LOAD DEFLECTION.
4. VARY THICKNESS OF HAUNCH TO ACCOUNT FOR ANY INACCURACIES IN CAMBER. MINIMUM HAUNCH THICKNESS SHALL BE 2 INCHES.
5. POSITIVE CAMBER VALUES IN THE TABLE INDICATE THE DOWNWARD DIRECTION.

LEGEND:

DSL = DENOTES DEFLECTION DUE TO STRUCTURAL STEEL

DLC = DENOTES DEFLECTION DUE TO CONCRETE SLAB, HAUNCH, & S.I.P. FORMS

SDL1 = DENOTES DEFLECTION DUE TO PARAPET & CLOSURE POUR

SDL2 = DENOTES DEFLECTION DUE TO LMC OVERLAY

TD&C = DENOTES TOTAL DEAD LOAD DEFLECTION & CAMBER

VCO = DENOTES CAMBER FOR VERTICAL CURVE ORDINATE DUE TO ROADWAY PROFILE.

NOTES:

1. FOR GIRDER ELEVATIONS AND SPAN LENGTH, L, REFER TO DWG. BM-01.
2. FOR FRAMING PLAN, REFER TO DWG. FR-01.

UNOFFICIAL WEBSITE COPY

ADDENDA / REVISIONS

NOT TO SCALE

REHABILITATION OF I-95, 2ND STREET ON-RAMP IMPROVEMENTS

CONTRACT	BRIDGE NO. 1 748S 059
T201907402	DESIGNED BY: D. NIZAMOFF
COUNTY	
NEW CASTLE	CHECKED BY: W. GESCHREI

GIRDER CAMBER DIAGRAMS 1 OF 3

BM-02

SECTION WRA

SHEET NO. 89

H:\3987-004\Contract_Ramp_D\CADD\Bridge\BRI-748S_BM02.dgn
8/23/2019 4:31:14 PM

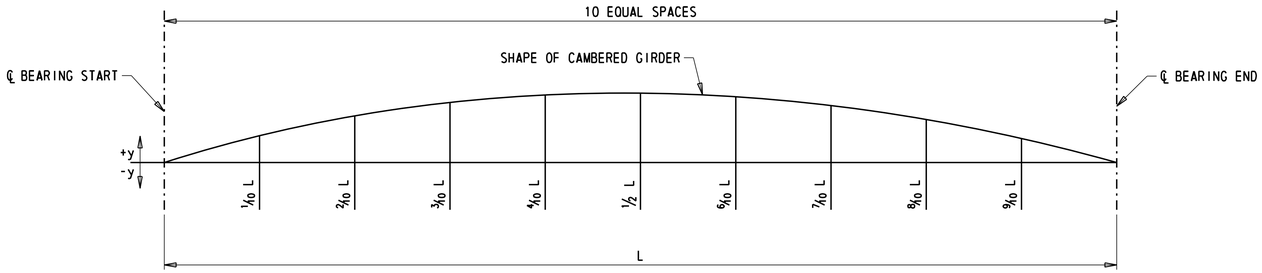

DEFLECTION AND TOTAL CAMBER (INCHES)												
PROPOSED GIRDERS		℄ BRG. START PIER 36S	1/10 L	2/10 L	3/10 L	4/10 L	5/10 L	6/10 L	7/10 L	8/10 L	9/10 L	℄ BRG. START PIER 37S
GIRDER 36S-7	DSL	0	1/8	3/16	1/4	5/16	5/16	5/16	1/4	3/16	1/8	0
	DLC	0	7/16	13/16	1 1/16	1 3/16	1 5/16	1 1/4	1 1/16	13/16	7/16	0
	SDL1	0	1/8	3/16	1/4	5/16	5/16	5/16	1/4	3/16	1/8	0
	SDL2	0	1/16	1/8	3/16	3/16	3/16	3/16	3/16	1/8	1/16	0
	TD&C	0	3/4	1 5/16	1 3/4	2	2 1/8	2 1/16	1 3/4	1 5/16	3/4	0
	VCO	0	7/16	11/16	1	15/16	3/4	1/2	1/4	0	-3/16	0
	TD&C + VCO	0	1 3/16	2	2 3/4	2 15/16	2 7/8	2 9/16	2	1 5/16	9/16	0
GIRDER 36S-8	DSL	0	1/8	3/16	1/4	5/16	3/8	5/16	5/16	3/16	1/8	0
	DLC	0	1/2	15/16	1 3/16	1 7/16	1 1/2	1 7/16	1 1/4	15/16	1/2	0
	SDL1	0	1/8	1/4	3/8	7/16	7/16	7/16	3/8	1/4	1/8	0
	SDL2	0	1/8	3/16	1/4	1/4	5/16	1/4	1/4	3/16	1/8	0
	TD&C	0	7/8	1 9/16	2 1/16	2 7/16	2 5/8	2 7/16	2 3/16	1 9/16	7/8	0
	VCO	0	9/16	15/16	1 3/8	1 1/4	15/16	5/8	1/4	-1/8	-5/16	0
	TD&C + VCO	0	1 7/16	2 1/2	3 7/16	3 11/16	3 9/16	3 1/16	2 7/16	1 7/16	9/16	0

DEFLECTION AND TOTAL CAMBER (INCHES)												
PROPOSED GIRDERS		℄ BRG. START PIER 37S	1/10 L	2/10 L	3/10 L	4/10 L	5/10 L	6/10 L	7/10 L	8/10 L	9/10 L	℄ BRG. START PIER 38S
GIRDER 37S-7	DSL	0	1/8	3/16	1/4	5/16	5/16	5/16	1/4	3/16	1/8	0
	DLC	0	7/16	3/4	1 1/16	1 1/4	1 5/16	1 1/4	1 1/16	3/4	7/16	0
	SDL1	0	1/8	3/16	1/4	5/16	5/16	5/16	1/4	3/16	1/8	0
	SDL2	0	1/16	1/8	3/16	3/16	3/16	3/16	3/16	1/8	1/16	0
	TD&C	0	3/4	1 1/4	1 3/4	2 1/16	2 1/8	2 1/16	1 3/4	1 1/4	3/4	0
	VCO	0	-1/16	-1/8	-3/16	-1/4	-1/4	-1/4	-3/16	-3/16	-1/16	0
	TD&C + VCO	0	11/16	1 1/8	1 9/16	1 13/16	1 7/8	1 13/16	1 9/16	1 1/16	11/16	0
GIRDER 37S-8	DSL	0	1/8	3/16	1/4	5/16	5/16	5/16	1/4	3/16	1/8	0
	DLC	0	1/2	15/16	1 1/4	1 1/2	1 9/16	1 1/2	1 5/16	15/16	1/2	0
	SDL1	0	1/8	1/4	3/8	7/16	1/2	7/16	3/8	5/16	3/16	0
	SDL2	0	1/16	3/16	1/4	1/4	5/16	1/4	1/4	3/16	1/16	0
	TD&C	0	13/16	1 9/16	2 1/8	2 1/2	2 11/16	2 1/2	2 3/16	1 5/8	7/8	0
	VCO	0	-1/16	-1/8	-3/16	-1/4	-1/4	-1/4	-3/16	-3/16	-1/16	0
	TD&C + VCO	0	3/4	1 7/16	1 15/16	2 1/4	2 7/16	2 1/4	2	1 7/16	13/16	0

LEGEND:

DSL = DENOTES DEFLECTION DUE TO STRUCTURAL STEEL

DLC = DENOTES DEFLECTION DUE TO CONCRETE SLAB, HAUNCH, & S.I.P. FORMS

SDL1 = DENOTES DEFLECTION DUE TO PARAPET & CLOSURE POUR

SDL2 = DENOTES DEFLECTION DUE TO LMC OVERLAY

TD&C = DENOTES TOTAL DEAD LOAD DEFLECTION & CAMBER

VCO = DENOTES CAMBER FOR VERTICAL CURVE ORDINATE DUE TO ROADWAY PROFILE.

NOTES:

1. FOR GIRDER ELEVATIONS AND SPAN LENGTH, L, REFER TO DWG. BM-01.
2. FOR FRAMING PLAN, REFER TO DWG. FR-01.
3. FOR STEEL GIRDER CAMBER NOTES, REFER TO DWG. BM-02.

UNOFFICIAL WEBSITE COPY

H:\3987-004\Contract_Ramp_D\CADD\Bridge\BRI-748S_BM03.dgn
8/23/2019 4:31:14 PM

ADDENDA / REVISIONS

NOT TO SCALE

REHABILITATION OF I-95, 2ND STREET ON-RAMP IMPROVEMENTS

CONTRACT	BRIDGE NO.	1 748S 059
T201907402	DESIGNED BY: D. NIZAMOFF	
COUNTY		
NEW CASTLE	CHECKED BY: W. GESCHREI	

GIRDER CAMBER DIAGRAMS 2 OF 3

BM-03

SECTION: WRA

SHEET NO. 90

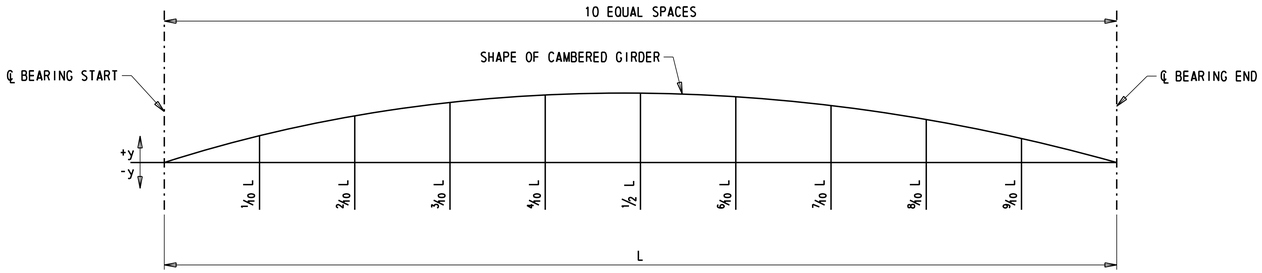

DEFLECTION AND TOTAL CAMBER (INCHES)

PROPOSED GIRDERS		℄ BRG. START PIER 38S	1/10 L	2/10 L	3/10 L	4/10 L	5/10 L	6/10 L	7/10 L	8/10 L	9/10 L	℄ BRG. START PIER 39S
GIRDER 38S-7	DSL	0	1/8	3/16	1/4	5/16	5/16	5/16	1/4	3/16	1/8	0
	DLC	0	3/8	5/8	7/8	1	1 1/16	1	7/8	5/8	3/8	0
	SDL1	0	1/16	1/16	1/16	1/8	1/8	1/8	1/16	1/16	1/16	0
	SDL2	0	1/16	1/8	1/8	3/16	3/16	3/16	1/8	1/8	1/16	0
	TD&C	0	5/8	1	1 5/16	1 5/8	1 11/16	1 5/8	1 5/16	1	5/8	0
	VCO	0	-1/8	-3/16	-1/4	-1/4	-3/16	-3/16	-3/16	-1/8	-1/16	0
	TD&C + VCO	0	1/2	13/16	1 1/16	1 3/8	1 1/2	1 7/16	1 1/8	7/8	9/16	0
GIRDER 38S-8	DSL	0	1/8	3/16	1/4	5/16	5/16	5/16	1/4	3/16	1/8	0
	DLC	0	3/8	11/16	15/16	1 1/8	1 3/16	1 1/8	1	11/16	3/8	0
	SDL1	0	1/16	1/8	1/8	3/16	3/16	3/16	1/8	1/8	1/16	0
	SDL2	0	1/16	1/8	3/16	3/16	3/16	3/16	3/16	1/8	1/16	0
	TD&C	0	5/8	1 1/8	1 1/2	1 13/16	1 7/8	1 13/16	1 9/16	1 1/8	5/8	0
	VCO	0	-1/8	-3/16	-1/4	-5/16	-1/4	-3/16	-3/16	-1/8	-1/16	0
	TD&C + VCO	0	1/2	15/16	1 1/4	1 1/2	1 5/8	1 5/8	1 3/8	1	9/16	0
GIRDER 38S-9	DSL	0	1/8	3/16	1/4	5/16	5/16	5/16	1/4	3/16	1/8	0
	DLC	0	7/16	3/4	1 1/16	1 1/4	1 5/16	1 1/4	1 1/16	3/4	7/16	0
	SDL1	0	1/16	3/16	1/4	1/4	1/4	1/4	1/4	3/16	1/16	0
	SDL2	0	1/16	1/8	3/16	1/4	1/4	1/4	3/16	1/8	1/16	0
	TD&C	0	11/16	1 1/4	1 3/4	2 1/16	2 1/8	2 1/16	1 3/4	1 1/4	11/16	0
	VCO	0	-1/8	-3/16	-1/4	-5/16	-1/4	-1/4	-3/16	-1/8	-1/16	0
	TD&C + VCO	0	9/16	1 1/16	1 1/2	1 3/4	1 7/8	1 13/16	1 9/16	1 1/8	5/8	0

DEFLECTION AND TOTAL CAMBER (INCHES)

PROPOSED GIRDERS		℄ BRG. START PIER 39S	1/10 L	2/10 L	3/10 L	4/10 L	5/10 L	6/10 L	7/10 L	8/10 L	9/10 L	℄ BRG. START PIER 40D
GIRDER 39S-7	DSL	0	1/8	3/16	1/4	5/16	5/16	5/16	1/4	3/16	1/8	0
	DLC	0	3/8	11/16	15/16	1 1/16	1 3/16	1 1/8	15/16	11/16	3/8	0
	SDL1	0	0	1/16	1/16	1/16	1/16	1/16	1/16	1/16	0	0
	SDL2	0	1/16	1/8	1/8	3/16	3/16	3/16	1/8	1/8	1/16	0
	TD&C	0	9/16	1 1/16	1 3/8	1 5/8	1 3/4	1 11/16	1 3/8	1 1/16	9/16	0
	VCO	0	1/16	1/8	3/16	5/16	3/8	5/16	5/16	5/16	1/4	0
	TD&C + VCO	0	5/8	1 3/16	1 9/16	1 15/16	2 1/8	2	1 11/16	1 3/8	13/16	0
GIRDER 39S-8	DSL	0	1/8	3/16	1/4	5/16	5/16	5/16	1/4	3/16	1/8	0
	DLC	0	7/16	3/4	1	1 3/16	1 1/4	1 3/16	1 1/16	3/4	7/16	0
	SDL1	0	1/16	1/16	1/16	1/8	1/8	1/8	1/16	1/16	1/16	0
	SDL2	0	1/16	1/8	3/16	3/16	3/16	3/16	3/16	1/8	1/16	0
	TD&C	0	11/16	1 1/8	1 1/2	1 13/16	1 7/8	1 13/16	1 9/16	1 1/8	11/16	0
	VCO	0	-3/16	-5/16	-7/16	-5/16	-1/8	0	1/8	1/4	3/16	0
	TD&C + VCO	0	1/2	13/16	1 1/16	1 1/2	1 3/4	1 13/16	1 11/16	1 3/8	7/8	0
GIRDER 39S-9	DSL	0	1/8	3/16	1/4	5/16	3/8	5/16	1/4	3/16	1/8	0
	DLC	0	7/16	13/16	1 1/8	1 5/16	1 3/8	1 5/16	1 1/8	13/16	7/16	0
	SDL1	0	1/16	1/8	1/8	3/16	3/16	3/16	1/8	1/8	1/16	0
	SDL2	0	1/16	1/8	3/16	1/4	1/4	1/4	3/16	1/8	1/16	0
	TD&C	0	11/16	1 1/4	1 11/16	2 1/16	2 3/16	2 1/16	1 11/16	1 1/4	11/16	0
	VCO	0	-7/16	-13/16	-1 3/16	-15/16	-11/16	-7/16	-3/16	0	1/16	0
	TD&C + VCO	0	1/4	7/16	1/2	1 1/8	1 1/2	1 5/8	1 1/2	1 1/4	3/4	0
GIRDER 39S-10	DSL	0	1/8	3/16	5/16	5/16	3/8	5/16	5/16	3/16	1/8	0
	DLC	0	1/2	7/8	1 3/16	1 3/8	1 7/16	1 3/8	1 3/16	7/8	1/2	0
	SDL1	0	1/16	1/8	3/16	1/4	1/4	1/4	3/16	1/8	1/16	0
	SDL2	0	1/16	1/8	3/16	1/4	1/4	1/4	3/16	1/8	1/16	0
	TD&C	0	3/4	1 5/16	1 7/8	2 3/16	2 5/16	2 3/16	1 7/8	1 5/16	3/4	0
	VCO	0	-11/16	-1 3/8	-1 7/8	-1 9/16	-1 1/4	-7/8	-9/16	-1/4	-1/16	0
	TD&C + VCO	0	1/16	-1/16	0	5/8	1 1/16	1 5/16	1 5/16	1 1/16	11/16	0

LEGEND:

DSL = DENOTES DEFLECTION DUE TO STRUCTURAL STEEL

DLC = DENOTES DEFLECTION DUE TO CONCRETE SLAB, HAUNCH, & S.I.P. FORMS

SDL1 = DENOTES DEFLECTION DUE TO PARAPET & CLOSURE POUR

SDL2 = DENOTES DEFLECTION DUE TO LMC OVERLAY

TD&C = DENOTES TOTAL DEAD LOAD DEFLECTION & CAMBER

VCO = DENOTES CAMBER FOR VERTICAL CURVE ORDINATE DUE TO ROADWAY PROFILE.

NOTES:

1. FOR GIRDER ELEVATIONS AND SPAN LENGTH, L, REFER TO DWG. BM-01.
2. FOR FRAMING PLAN, REFER TO DWG. FR-01.
3. FOR STEEL GIRDER CAMBER NOTES, REFER TO DWG. BM-02.

UNOFFICIAL WEBSITE COPY

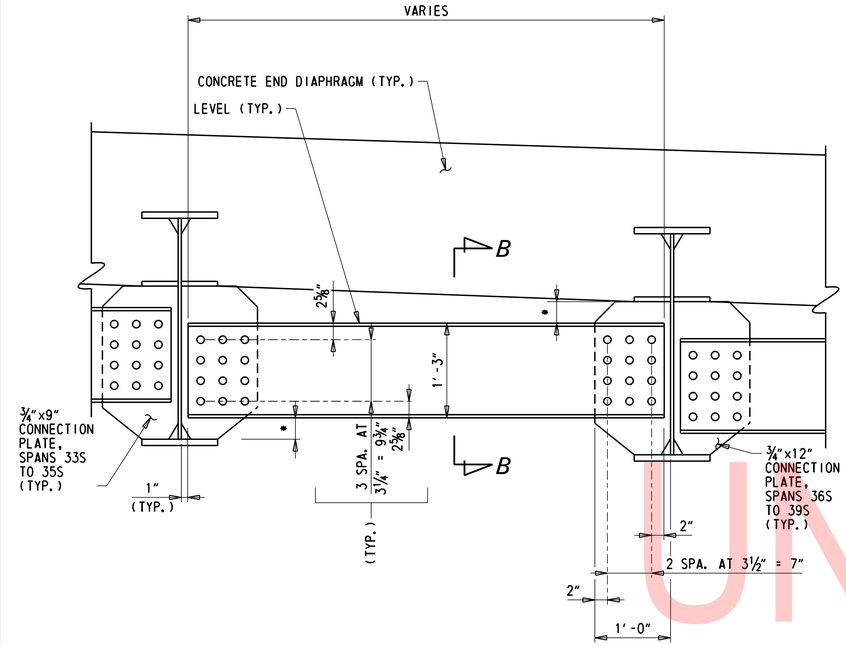

END DIAPHRAGM DETAILS

1" = 1'-0"

* PLACE DIAPHRAGMS SO THAT MINIMUM DISTANCES FROM FLANGES ARE EQUAL.

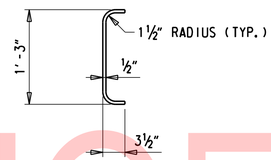

SECTION B-B

1" = 1'-0"

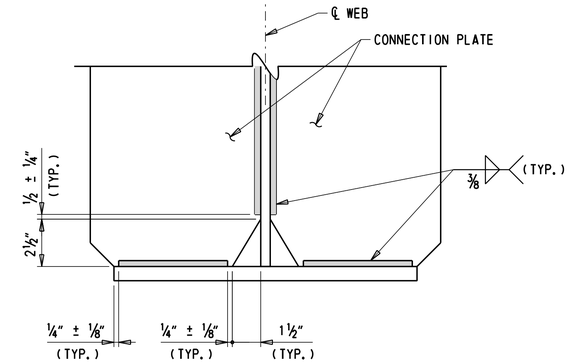

WELD TERMINATION AND CORNER CHAMFER DETAILS

3" = 1'-0"

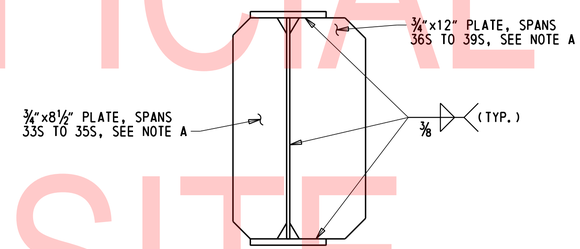

CONNECTION PLATE DETAIL FOR INTERMEDIATE DIAPHRAGMS

1" = 1'-0"

NOTE A: CONNECTION PLATES SHALL NOT BE INSTALLED ON EXTERIOR FACE OF GIRDERS 33S-8, 34S-8, 35S-8, 36S-8, 37S-8, 38S-9, 39S-10

NOTES:

1. FOR LOCATION OF INTERMEDIATE DIAPHRAGMS, SEE FRAMING PLAN ON DWGS. FR-01 AND FR-02.
2. ALL BOLTS IN DIAPHRAGM CONNECTIONS SHALL BE 1" DIA. HIGH STRENGTH BOLTS IN CONFORMANCE WITH ASTM F3125, GR. A490, TYPE 1.
3. ALL BOLT HOLES IN DIAPHRAGMS, DIAPHRAGM CONNECTIONS PLATES, AND BEARING STIFFENERS SHALL BE 1 1/16" UNLESS NOTED OTHERWISE.
4. THE MINIMUM ACCEPTABLE EDGE DISTANCE FOR ANY 1 1/16" DIA. HOLE SHALL BE 1¾".
5. ALL DIAPHRAGMS MUST BE COMPLETELY CONNECTED, WITH BOLTS FULLY PRE-TENSIONED, TO GIRDERS PRIOR TO PLACING DECK SLAB.
6. SHEAR STUDS NOT SHOWN.
7. PROVIDE BOTTOM FLANGE IN A TRUE HORIZONTAL PLANE IN TRANSVERSE DIRECTION AND IN A TRUE PLANE LONGITUDINALLY OVER DIMENSION "L", WHERE L = WIDTH OF SOLE PLATE + 6" AHEAD AND BACK, WHERE APPLICABLE. IF THE SOLE PLATE IS WELDED TO THE BOTTOM FLANGE, PROVIDE THE SOLE PLATE MEETING THE SAME FLATNESS REQUIREMENTS. ENSURE THE SOLE PLATES AND BEARINGS ARE IN FULL CONTACT WITH ONE ANOTHER AND LOADED UNIFORMLY AFTER ALL DEAD LOAD IS PLACED. MAKE NECESSARY SHOP AND/OR FIELD ADJUSTMENTS TO PROVIDE UNIFORM BEARING STRESS UNDER ALL DEAD LOADS.
8. THE STEEL END DIAPHRAGM IN BAY 6 IS OFFSET 2'-6". THE INTERMEDIATE DIAPHRAGM AND CONNECTION PLATE SHALL BE USED AT THESE LOCATIONS.
9. DURING ERECTION, BEFORE THE CLOSURE POUR IS PLACED, HAND TIGHTEN THE BOLTS IN THE SHORT SLOTTED HOLES IN BAY 6 AT GIRDER 6. AFTER THE CLOSURE POUR HAS BEEN PLACED AND REACHED 3000 PSI THE BOLTS IN THE SHORT SLOTTED HOLES SHALL BE FULLY TORQUED IN ACCORDANCE WITH THE STANDARD SPECIFICATIONS.

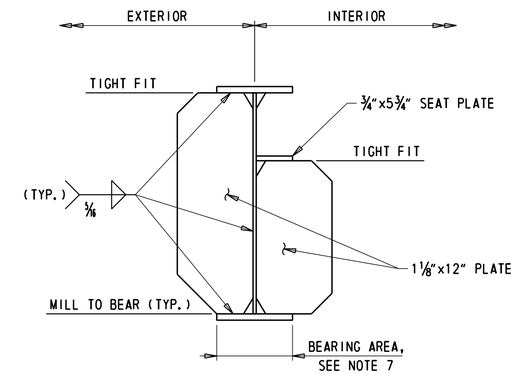

BEARING STIFFENER DETAIL

1" = 1'-0"

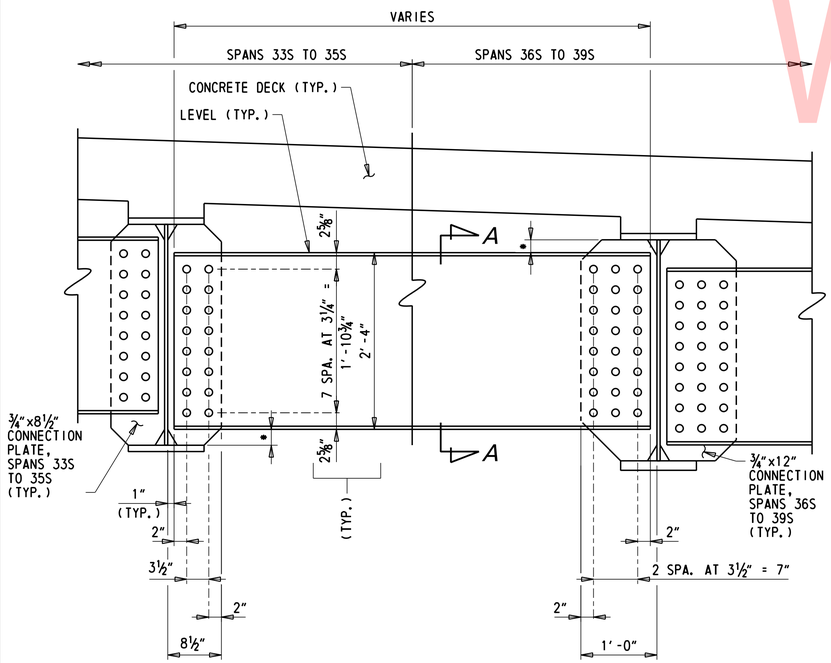

INTERMEDIATE DIAPHRAGM DETAILS

1" = 1'-0"

* PLACE DIAPHRAGMS SO THAT MINIMUM DISTANCES FROM FLANGES ARE EQUAL.

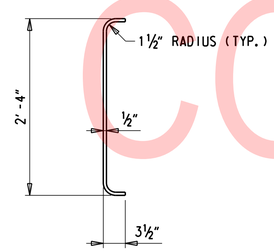

SECTION A-A

1" = 1'-0"

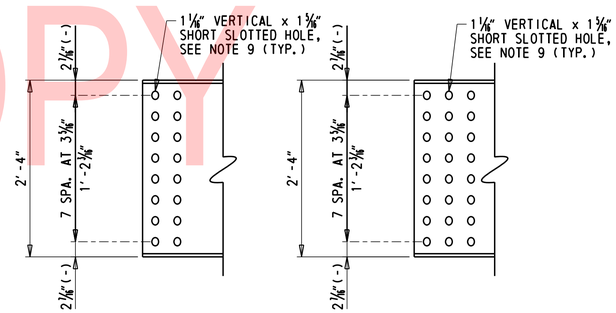

NOTE B: FOR DIMENSIONS NOT SHOWN SEE INTERMEDIATE DIAPHRAGM DETAIL, THIS SHEET.

INTERMEDIATE DIAPHRAGM SLOTTED HOLES AT GIRDER 6 IN BAY 6

1" = 1'-0"

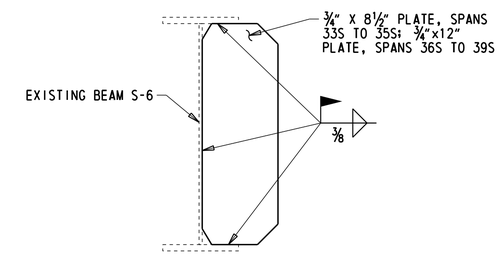

CONNECTION PLATE WELD DETAIL TO EXISTING GIRDER

1" = 1'-0"

UNOFFICIAL WEBSITE COPY

N:\31987-004\Contract_Ramp_D\CADD\Bridge\BR1-748S_BM05.dgn
8/23/2019 4:31:16 PM

ADDENDA / REVISIONS	SCALE AS NOTED	REHABILITATION OF I-95, 2ND STREET ON-RAMP IMPROVEMENTS	CONTRACT T201907402	BRIDGE NO. 1 748S 059	INTERMEDIATE DIAPHRAGM DETAILS	BM-05
			COUNTY NEW CASTLE	DESIGNED BY: D. NIZAMOFF		SECTION WRA
				CHECKED BY: W. GESCHREI		SHEET NO. 92

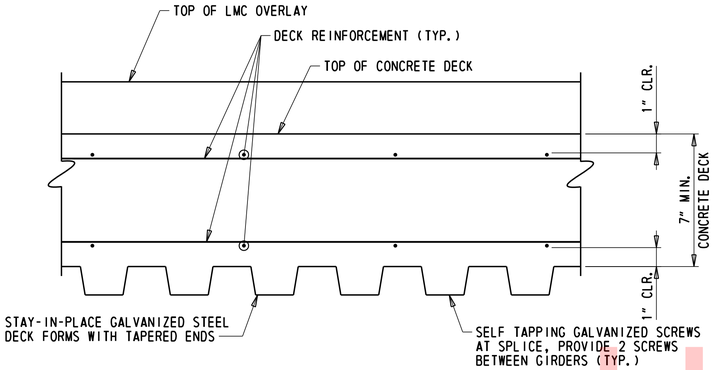

STAY-IN-PLACE FORM DETAIL

3" = 1'-0"

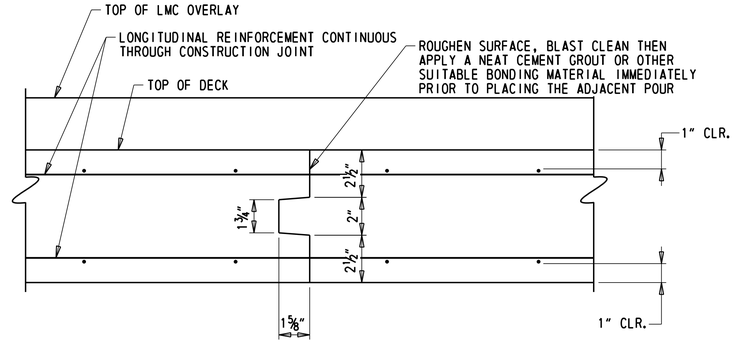

DECK CONSTRUCTION JOINT

3" = 1'-0"

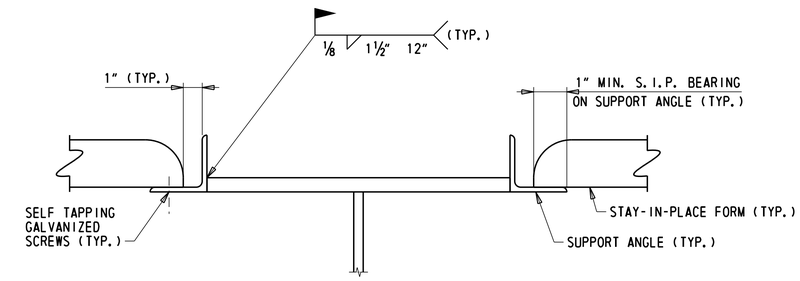

COMPRESSION FLANGE STAY-IN-PLACE FORM CONNECTION DETAIL

3" = 1'-0"

STAY-IN-PLACE FORM NOTES:

1. THESE FORMS SHALL BE VERTICALLY ADJUSTED TO ATTAIN LINE AND GRADE REQUIRED ON THE PLANS.
2. THE CONTRACTOR SHALL SUBMIT SHOP DRAWINGS FOR APPROVAL. METAL FORMS MUST BE GALVANIZED AND MORTAR TIGHT. STEEL METAL SCREWS MUST BE NON-CORROSIVE. SELF TAPPING SCREWS SHALL BE INSTALLED AT THE SIDE LAP OF THE SHEETS AT MID-SPAN SUPPORTS. ALL ANGLES, WELDS, AND INSERTS MUST BE DESIGNED BY THE CONTRACTOR.
3. ALL MATERIALS AND LABOR NEEDED FOR FORMS SHALL BE INCIDENTAL TO ITEM 610017 - P.C.C. MASONRY, SUPERSTRUCTURE, CLASS D.

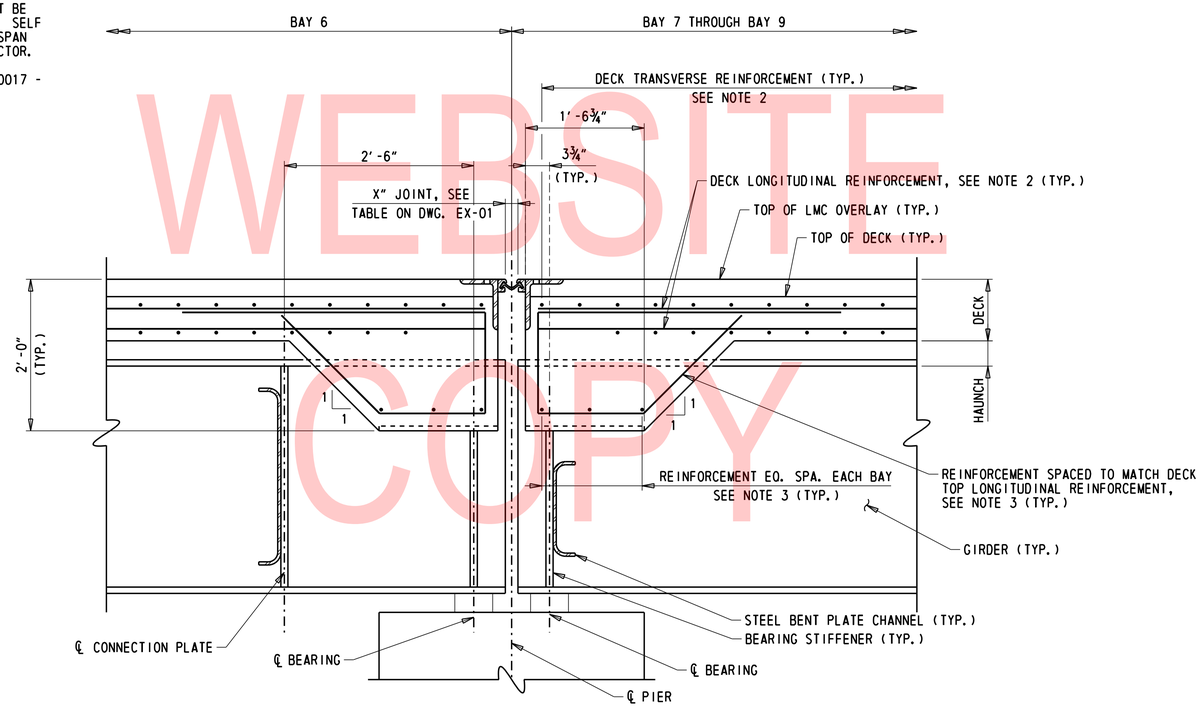

NOTE:

SHEAR STUDS, BASE PLATE, AND PEDESTALS NOT SHOWN FOR CLARITY.

TYPICAL SECTION AT RAMP D PIERS

1" = 1'-0"

NOTES:

1. FOR LOCATION AND SPACING OF SHEAR STUDS, SEE DWG. NO. BM-01.
2. FOR DECK REINFORCEMENT, SEE DWGS. DK-08 TO DK-14.
3. FOR CONCRETE END DIPHRAGM REINFORCEMENT, SEE DWGS. EX-04 TO EX-06.
4. FOR STEEL END DIAPHRAGM DETAILS, SEE BM-05.

UNOFFICIAL WEBSITE COPY

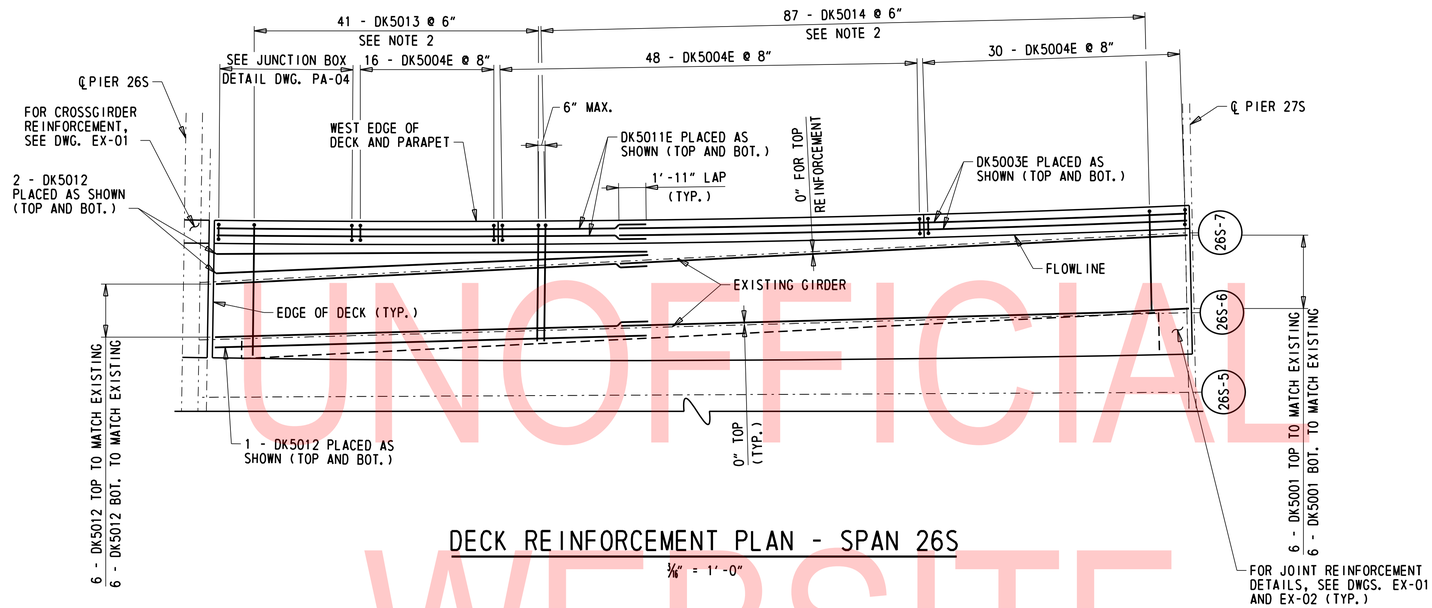

DECK REINFORCEMENT PLAN - SPAN 26S

1/16" = 1'-0"

NOTES:

1. FOR ADDITIONAL PARAPET REINFORCEMENT DETAILS, SEE DWG. PA-01.
2. DUE TO DECK CURVE, FIELD TRIMMING OF BARS DK5013 AND DK5014 MAY BE NECESSARY.

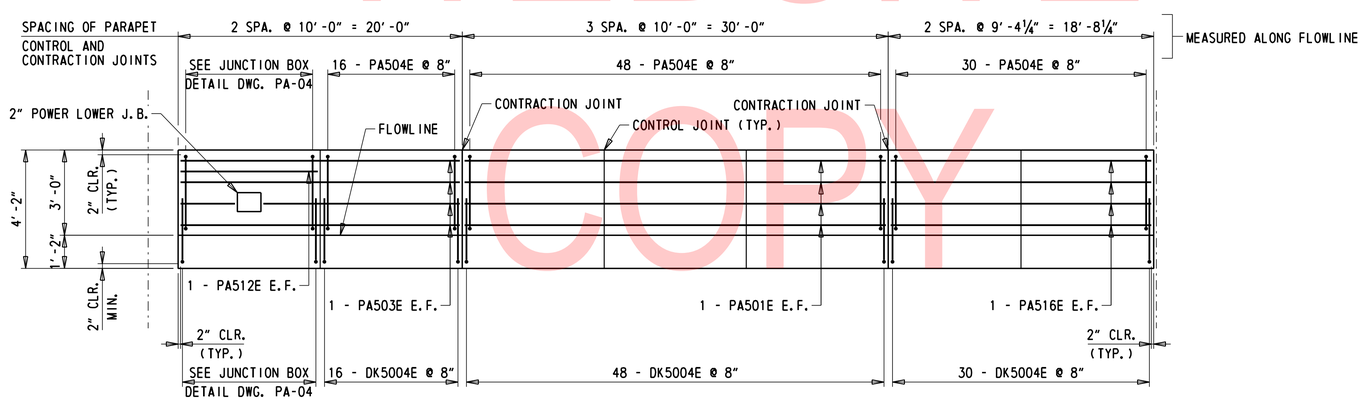

PARAPET REINFORCEMENT DEVELOPED ELEVATION - SPAN 26S

HORIZONTAL - 1/16" = 1'-0"
VERTICAL - 3/8" = 1'-0"

UNOFFICIAL WEBSITE COPY

N:\31987-004\Contract_Ramp_D\CADD\Bridge\BR1-748S_DK01.dgn
8/23/2019 4:31:17 PM

ADDENDA / REVISIONS		SCALE AS NOTED	REHABILITATION OF I-95, 2ND STREET ON-RAMP IMPROVEMENTS	CONTRACT T201907402	BRIDGE NO. 1 748S 059	DECK OVERHANG REINFORCEMENT SPAN 26S	DK-01 SECTION WRA
				COUNTY NEW CASTLE	DESIGNED BY: D. NIZAMOFF		SHEET NO. 94
					CHECKED BY: W. GESCHREI		

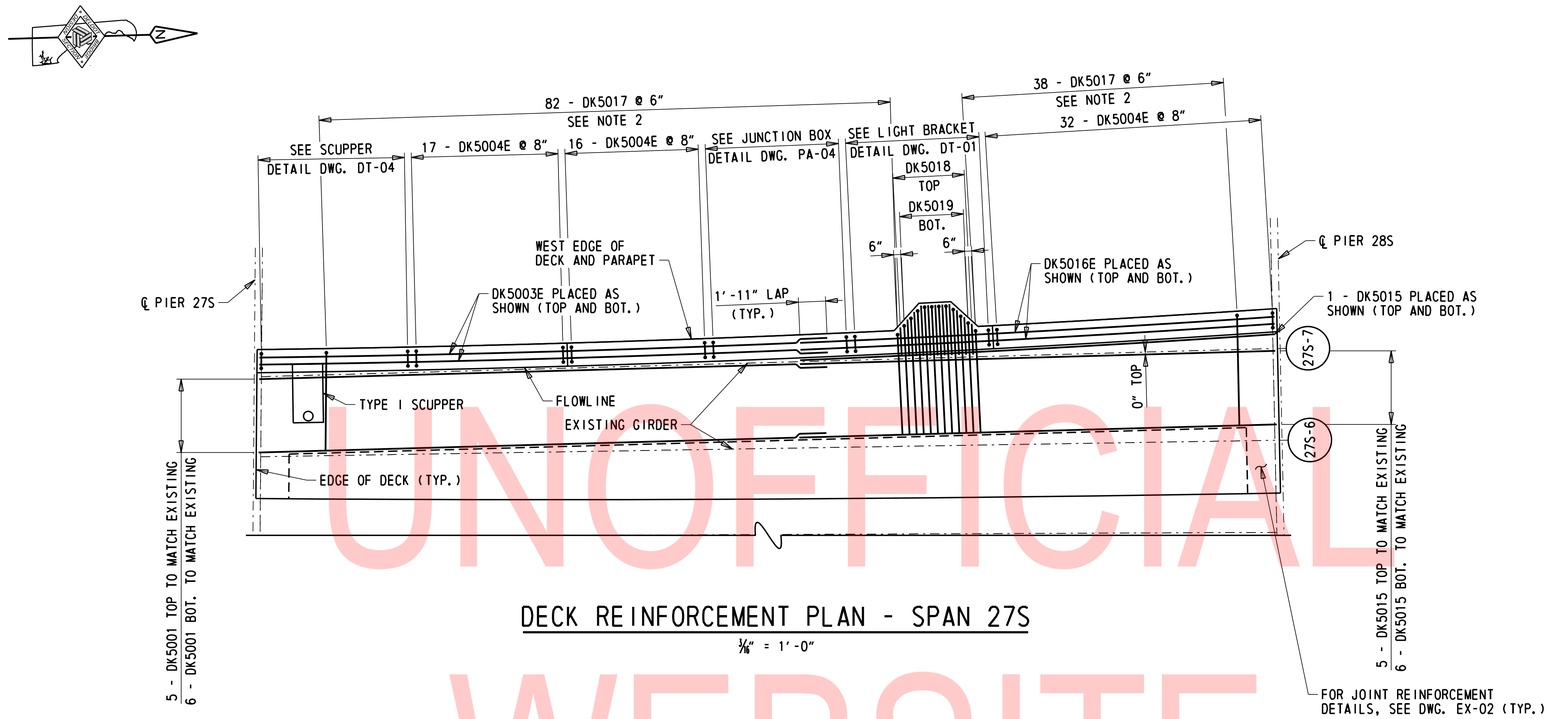

DECK REINFORCEMENT PLAN - SPAN 27S

3/16" = 1'-0"

NOTES:

1. FOR ADDITIONAL PARAPET REINFORCEMENT DETAILS, SEE DWG. PA-01.
2. DUE TO DECK CURVE, FIELD TRIMMING OF BARS DK5017, DK5018, AND DK5019 MAY BE NECESSARY.

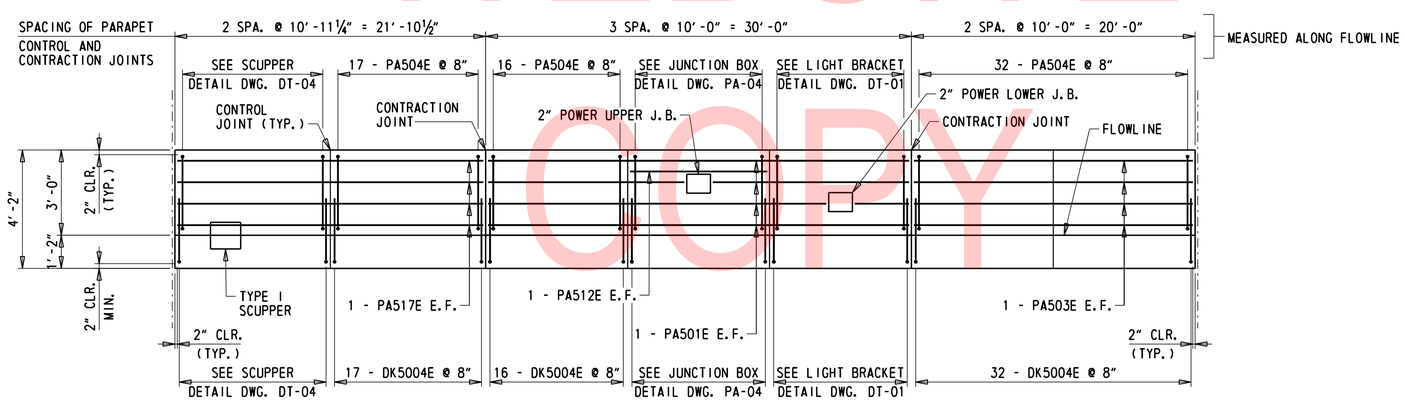

PARAPET REINFORCEMENT DEVELOPED ELEVATION - SPAN 27S

HORIZONTAL - 3/16" = 1'-0"
VERTICAL - 3/8" = 1'-0"

UNOFFICIAL WEBSITE COPY

N:\31987-004\Contract1_Ramp_D\CADD\Bridge\BR1-748S_DK02.dgn
8/23/2019 4:31:18 PM

ADDENDA / REVISIONS	SCALE AS NOTED	REHABILITATION OF I-95, 2ND STREET ON-RAMP IMPROVEMENTS	CONTRACT T201907402	BRIDGE NO. 1 748S 059	DECK OVERHANG REINFORCEMENT SPAN 27S	DK-02
			COUNTY NEW CASTLE	DESIGNED BY: D. NIZAMOFF		SECTION WRA
				CHECKED BY: W. GESCHREI		SHEET NO. 95

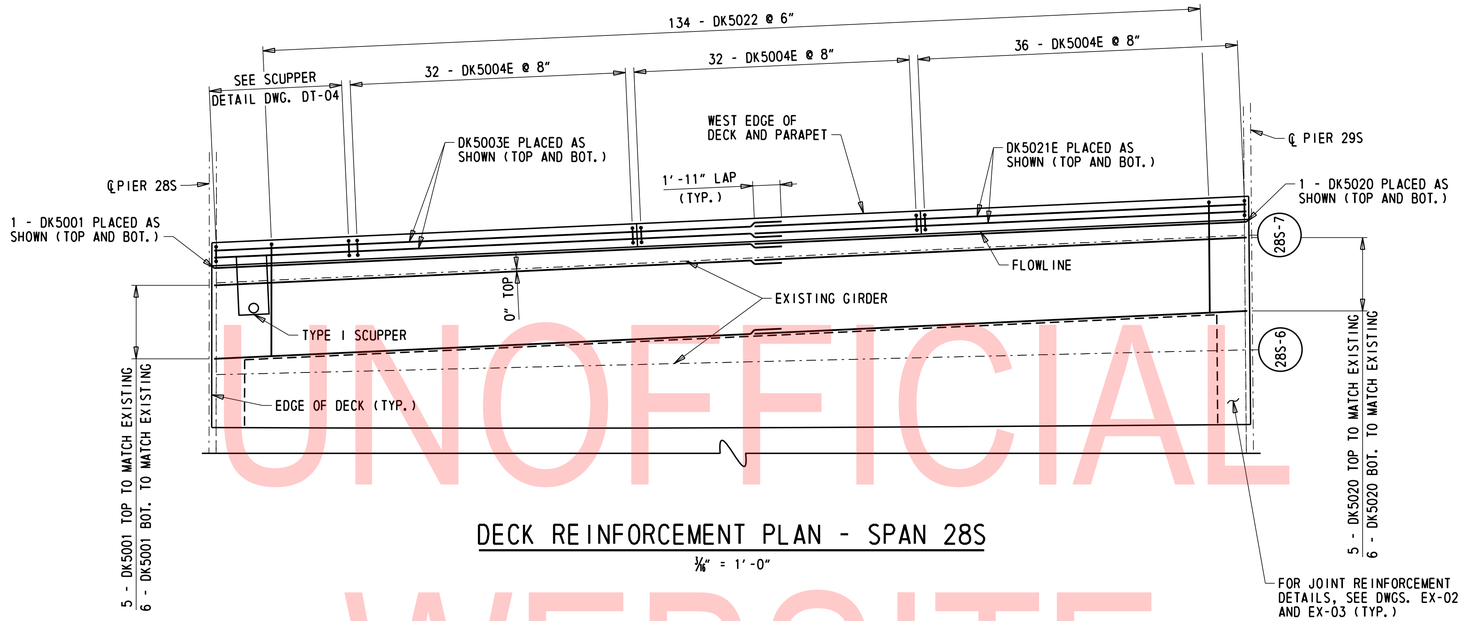

DECK REINFORCEMENT PLAN - SPAN 28S

1/16" = 1'-0"

NOTES:

1. FOR ADDITIONAL PARAPET REINFORCEMENT DETAILS, SEE DWG. PA-01.

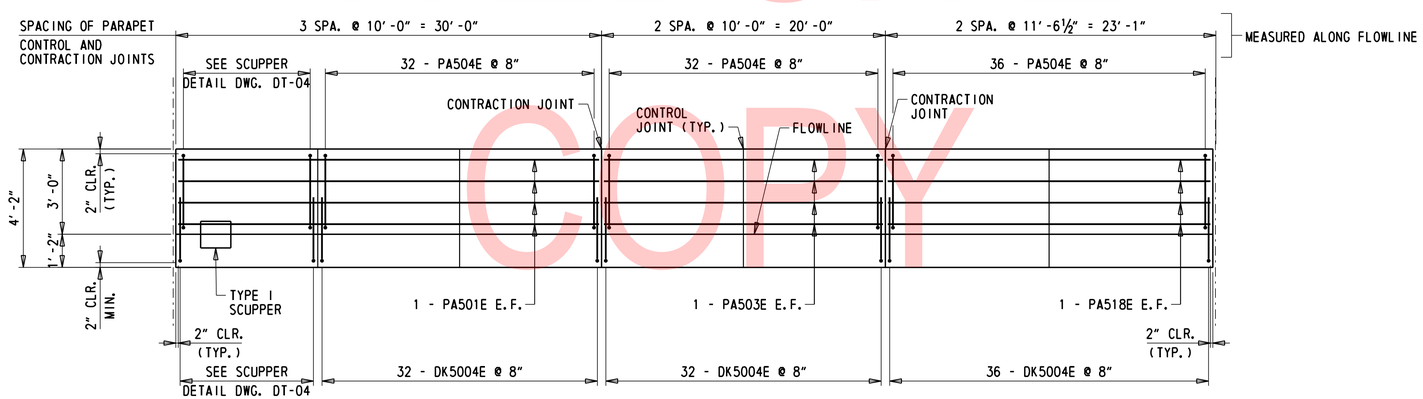

PARAPET REINFORCEMENT DEVELOPED ELEVATION - SPAN 28S

HORIZONTAL - 3/16" = 1'-0"
VERTICAL - 3/8" = 1'-0"

UNOFFICIAL WEBSITE COPY

N:\31987-004\Contract_Ramp_D\CADD\Bridge\BR1-748S_DK03.dgn
8/23/2019 4:31:19 PM

ADDENDA / REVISIONS	SCALE AS NOTED	REHABILITATION OF I-95, 2ND STREET ON-RAMP IMPROVEMENTS	CONTRACT T201907402	BRIDGE NO. 1 748S 059	DECK OVERHANG REINFORCEMENT SPAN 28S	DK-03
			COUNTY NEW CASTLE	DESIGNED BY: D. NIZAMOFF		SECTION WRA
				CHECKED BY: W. GESCHREI		SHEET NO. 96

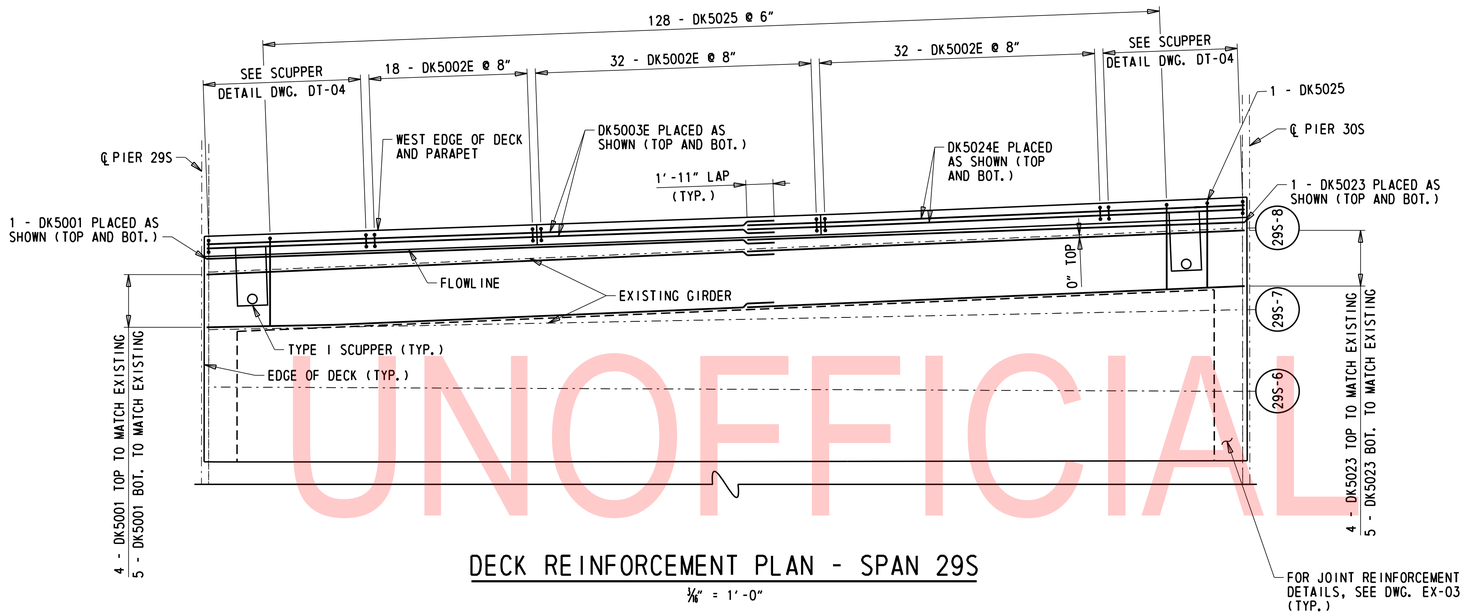

DECK REINFORCEMENT PLAN - SPAN 29S

3/16" = 1'-0"

NOTES:

1. FOR ADDITIONAL PARAPET REINFORCEMENT DETAILS, SEE DWG. PA-01.

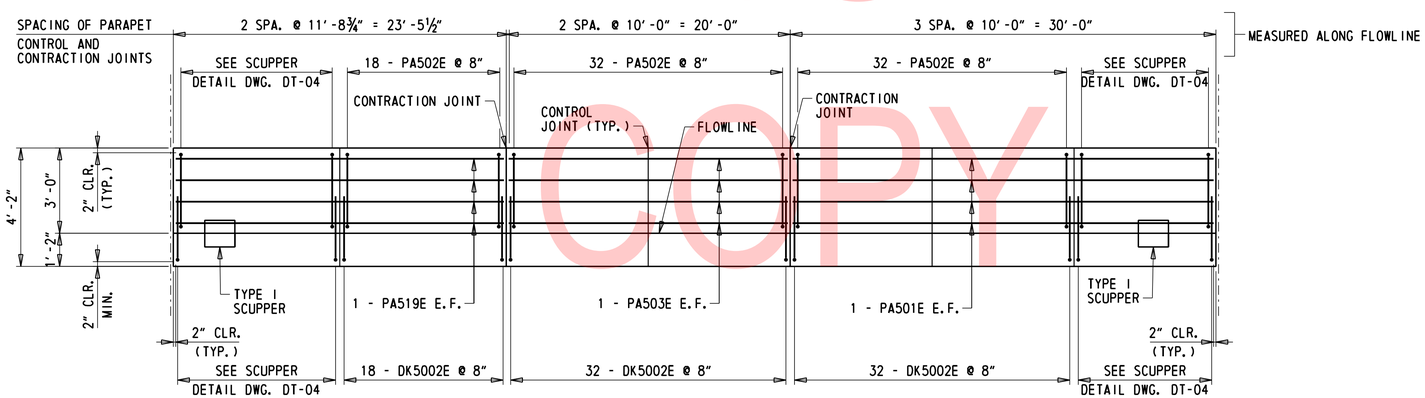

PARAPET REINFORCEMENT DEVELOPED ELEVATION - SPAN 29S

HORIZONTAL - 3/16" = 1'-0"
VERTICAL - 3/8" = 1'-0"

UNOFFICIAL WEBSITE COPY

N:\31987-004\Contract1_Ramp_D\CADD\Bridge\BR1-748S_DK04.dgn
8/23/2019 4:31:20 PM

ADDENDA / REVISIONS	SCALE AS NOTED	REHABILITATION OF I-95, 2ND STREET ON-RAMP IMPROVEMENTS	CONTRACT T201907402	BRIDGE NO. 1 748S 059	DECK OVERHANG REINFORCEMENT SPAN 29S	DK-04
			COUNTY NEW CASTLE	DESIGNED BY: D. NIZAMOFF		SECTION WRA
				CHECKED BY: W. GESCHREI		SHEET NO. 97

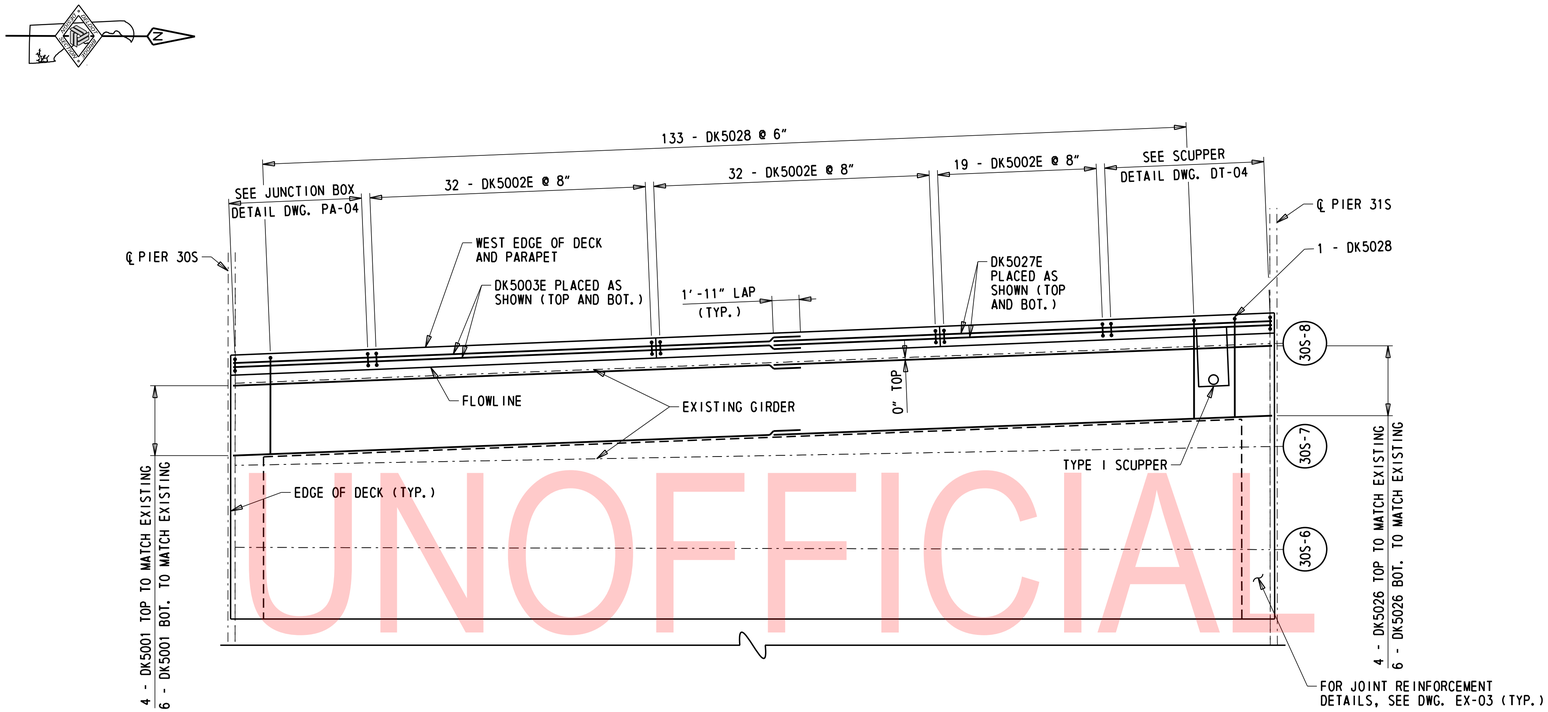

DECK REINFORCEMENT PLAN - SPAN 30S

3/16" = 1'-0"

NOTES:

1. FOR ADDITIONAL PARAPET REINFORCEMENT DETAILS, SEE DWG. PA-01.

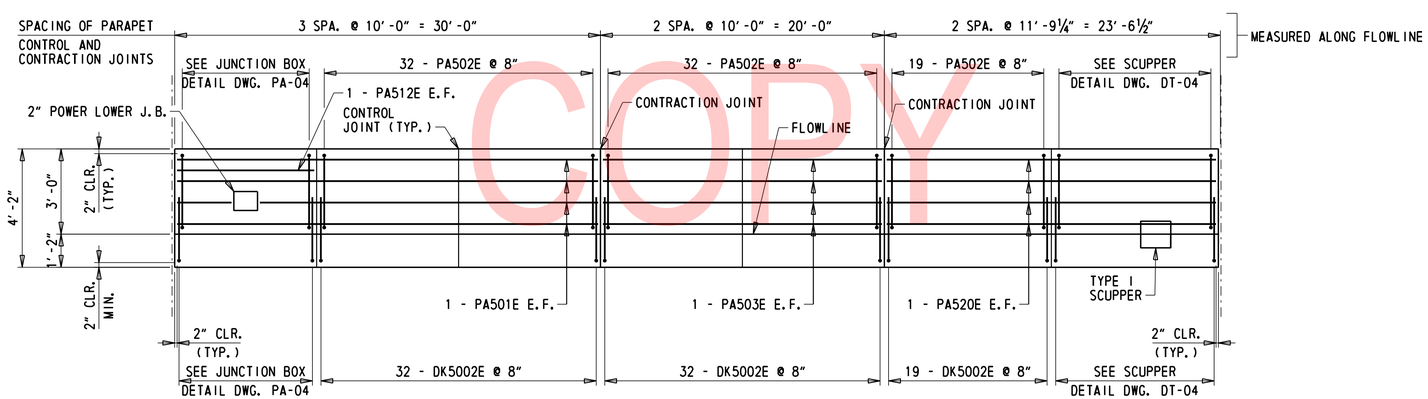

PARAPET REINFORCEMENT DEVELOPED ELEVATION - SPAN 30S

HORIZONTAL - 3/16" = 1'-0"
VERTICAL - 3/8" = 1'-0"

UNOFFICIAL WEBSITE COPY

ADDENDA / REVISIONS	SCALE AS NOTED	REHABILITATION OF I-95, 2ND STREET ON-RAMP IMPROVEMENTS	CONTRACT T201907402	BRIDGE NO. 1 748S 059	DECK OVERHANG REINFORCEMENT SPAN 30S	DK-05
			COUNTY NEW CASTLE	DESIGNED BY: D. NIZAMOFF		SECTION WRA
				CHECKED BY: W. GESCHREI		SHEET NO. 98

N:\31987-004\Contract_Ramp_D\CADD\Bridge\BRI-7485_DK05.dgn
8/23/2019 4:31:21 PM

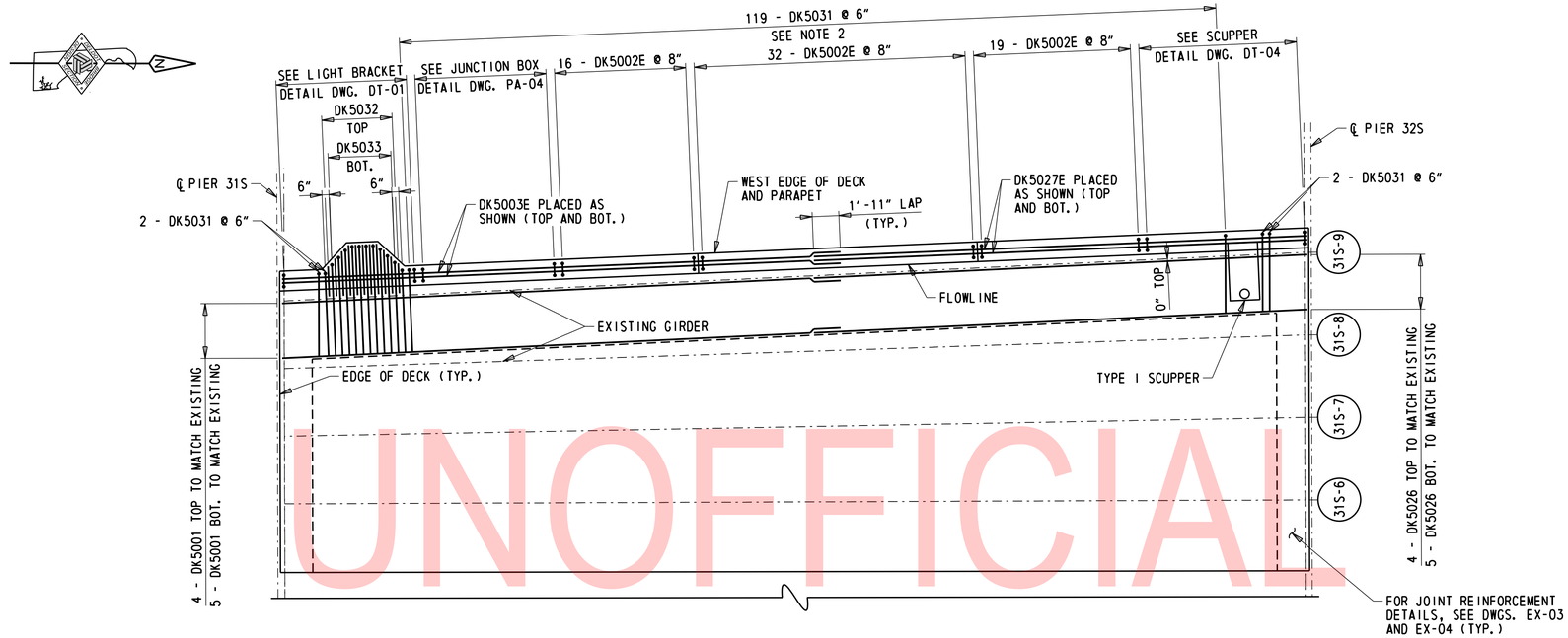

DECK REINFORCEMENT PLAN - SPAN 31S

3/16" = 1'-0"

UNOFFICIAL WEBSITE COPY

NOTES:

1. FOR ADDITIONAL PARAPET REINFORCEMENT DETAILS, SEE DWG. PA-01.
2. DUE TO DECK CURVE, FIELD TRIMMING OF BARS DK5031, DK5032, AND DK5033 MAY BE NECESSARY.

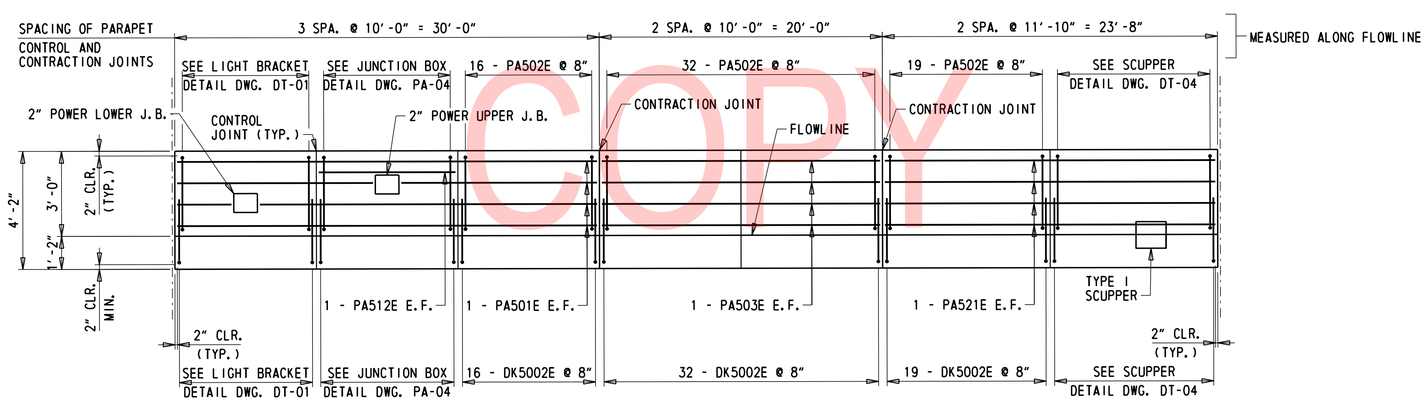

PARAPET REINFORCEMENT DEVELOPED ELEVATION - SPAN 31S

HORIZONTAL - 3/16" = 1'-0"
VERTICAL - 3/8" = 1'-0"

ADDENDA / REVISIONS	SCALE AS NOTED	REHABILITATION OF I-95, 2ND STREET ON-RAMP IMPROVEMENTS	CONTRACT T201907402	BRIDGE NO. 1 748S 059	DECK OVERHANG REINFORCEMENT SPAN 31S	DK-06
			COUNTY NEW CASTLE	DESIGNED BY: D. NIZAMOFF		SECTION WRA
				CHECKED BY: W. GESCHREI		SHEET NO. 99

N:\33987-004\Control_Ramp_D\CADD\Bridge\BR1-748S_DK06.dgn
8/22/2019 4:52:22 PM

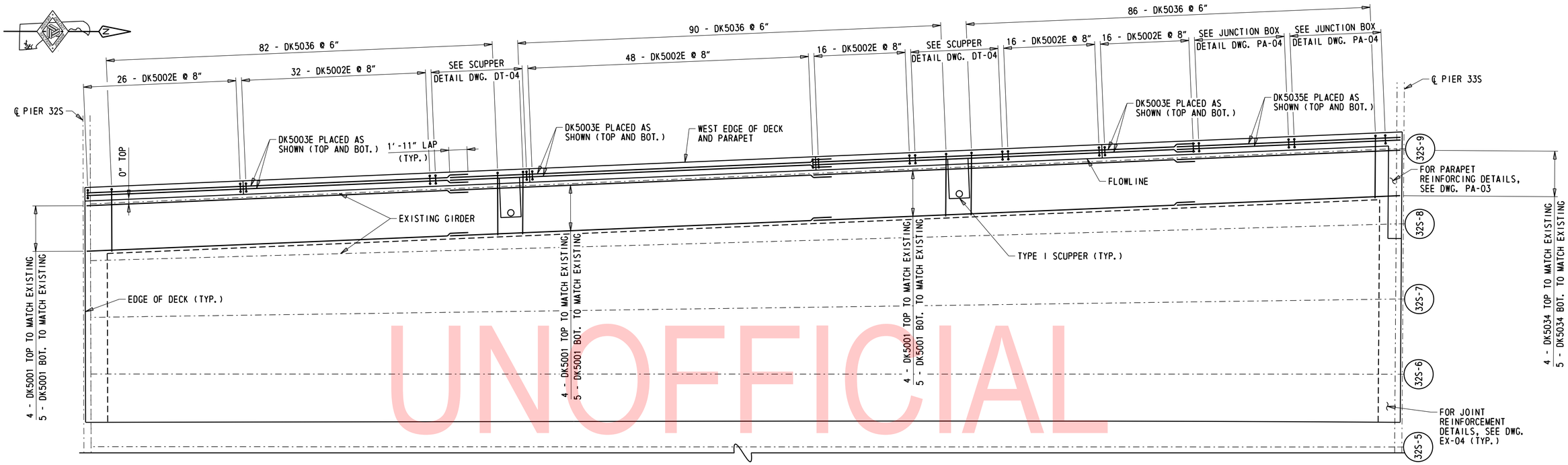

DECK REINFORCEMENT PLAN - SPAN 32S

3/16" = 1'-0"

NOTES:

1. FOR ADDITIONAL PARAPET REINFORCEMENT DETAILS, SEE DWG. PA-01.

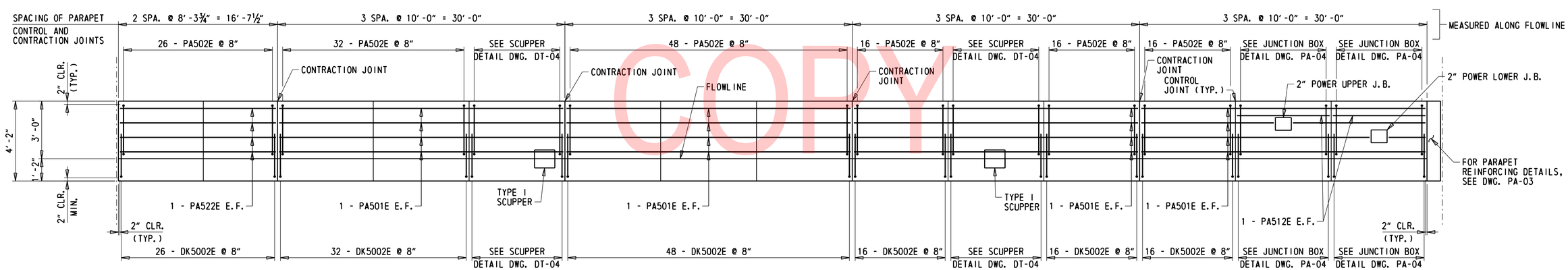

PARAPET REINFORCEMENT DEVELOPED ELEVATION - SPAN 32S

HORIZONTAL - 3/16" = 1'-0"
VERTICAL - 3/8" = 1'-0"

UNOFFICIAL WEBSITE COPY

N:\31987-004\Contract_Ramp_D\CADD\Bridge\BRI-7485_DK07.dgn
8/23/2019 4:31:23 PM

ADDENDA / REVISIONS		SCALE AS NOTED	REHABILITATION OF I-95, 2ND STREET ON-RAMP IMPROVEMENTS	CONTRACT T201907402	BRIDGE NO. 1 748S 059	DECK OVERHANG REINFORCEMENT SPAN 32S	DK-07
				COUNTY NEW CASTLE	DESIGNED BY: D. NIZAMOFF		SECTION WRA
					CHECKED BY: W. GESCHREI		SHEET NO. 100

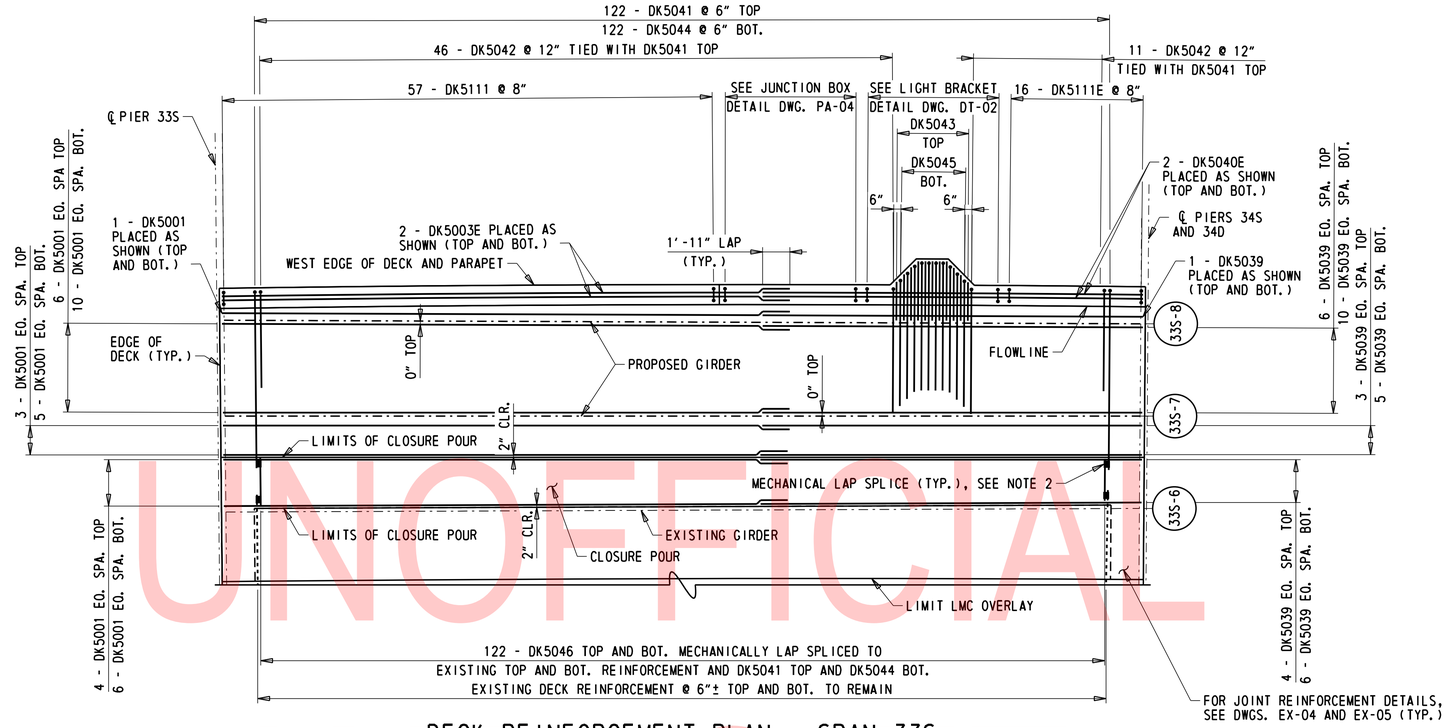

DECK REINFORCEMENT PLAN - SPAN 33S

3/16" = 1'-0"

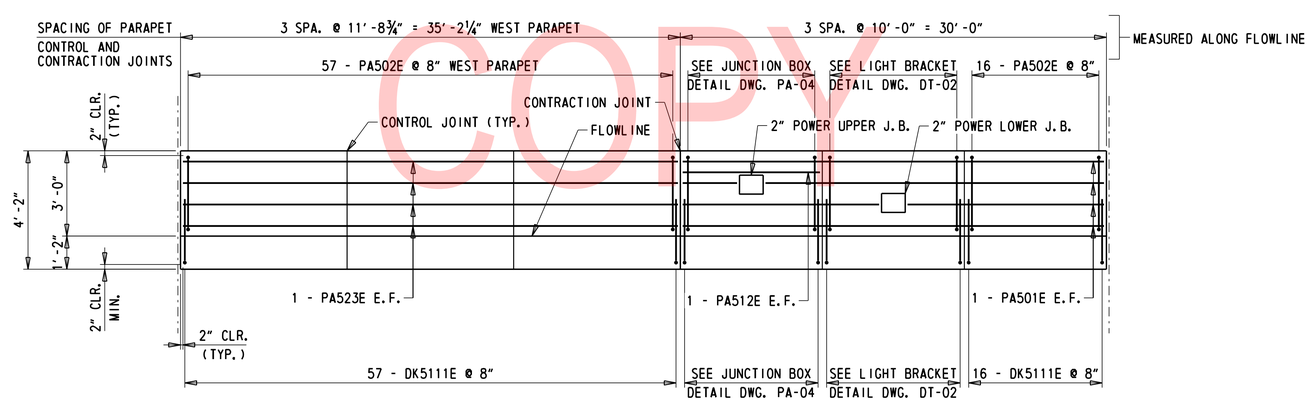

PARAPET REINFORCEMENT DEVELOPED ELEVATION - SPAN 33S

HORIZONTAL - 3/16" = 1'-0"
VERTICAL - 3/8" = 1'-0"

NOTES:

1. FOR ADDITIONAL DECK SLAB AND PARAPET REINFORCEMENT DETAILS, SEE TYPICAL SECTION ON DWG. DK-15.
2. PROVIDE MECHANICAL LAP SPLICES AT LOCATIONS SHOWN ON THE PLANS. MECHANICAL SPLICES ARE NOT PERMITTED IN OTHER LOCATIONS UNLESS WRITTEN APPROVAL IS OBTAINED FROM THE ENGINEER. MECHANICAL LAP SPLICES SHALL BE ABLE TO DEVELOP A MINIMUM OF 125% OF THE SPECIFIED YIELD STRENGTH OF THE REINFORCING STEEL BARS. ALL MECHANICAL LAP SPLICES SHALL BE PROVIDED IN CONFORMANCE WITH SECTION 611. PAYMENT FOR MECHANICAL LAP SPLICES WILL NOT BE MEASURED BUT THE COST WILL BE INCIDENTAL TO ITEM 611000 - BAR REINFORCEMENT.
3. DUE TO DECK CURVE, FIELD TRIMMING OF BARS DK5045 AND DK5046 MAY BE NECESSARY.

UNOFFICIAL WEBSITE COPY

N:\31987-004\Contract_Ramp_D\CADD\Bridge\BRI-748S_DK08.dgn
8/23/2019 4:31:24 PM

ADDENDA / REVISIONS	SCALE AS NOTED	REHABILITATION OF I-95, 2ND STREET ON-RAMP IMPROVEMENTS	CONTRACT T201907402	BRIDGE NO. 1 748S 059	DECK SLAB AND PARAPET REINFORCEMENT SPAN 33S	DK-08
			COUNTY NEW CASTLE	DESIGNED BY: D. NIZAMOFF		SECTION WRA
				CHECKED BY: W. GESCHREI		SHEET NO. 101

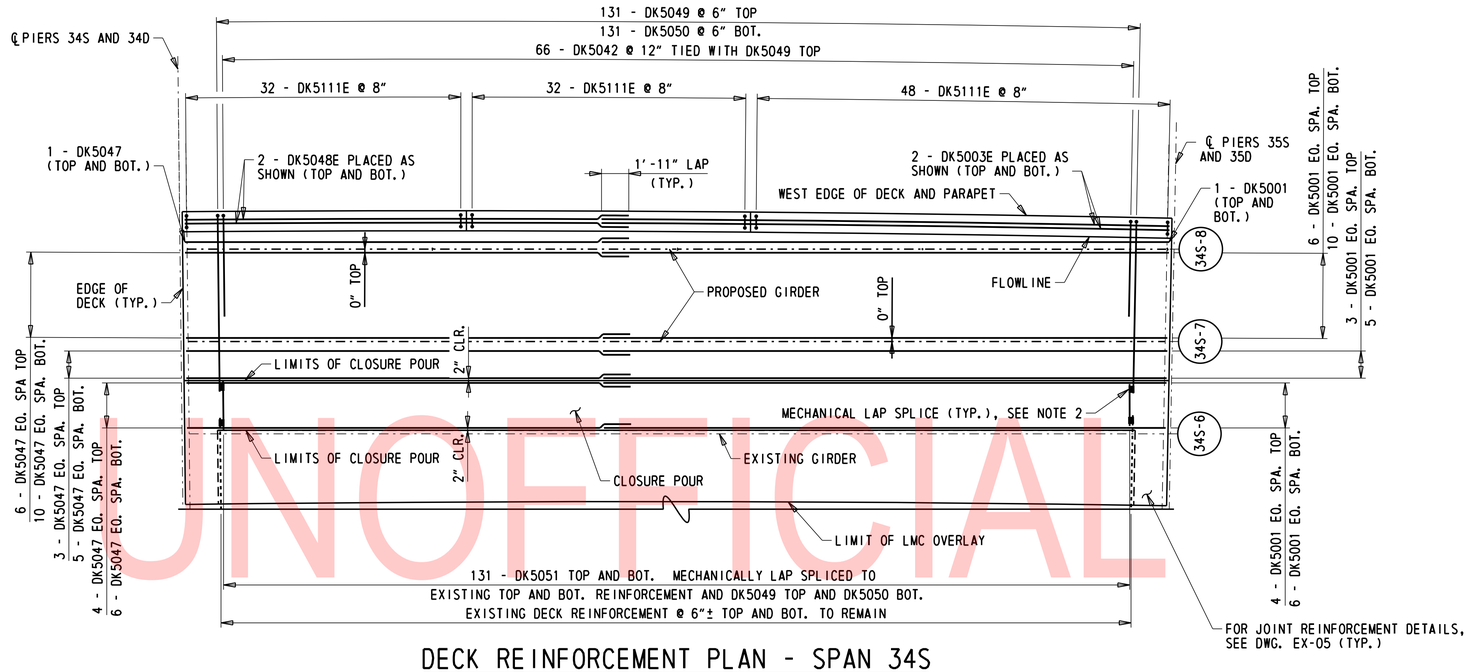

DECK REINFORCEMENT PLAN - SPAN 34S

3/16" = 1'-0"

UNOFFICIAL WEBSITE COPY

NOTES:

1. FOR ADDITIONAL DECK AND PARAPET REINFORCEMENT DETAILS, SEE TYPICAL SECTION ON DWG. DK-15.
2. PROVIDE MECHANICAL LAP SPLICES AT LOCATIONS SHOWN ON THE PLANS. MECHANICAL SPLICES ARE NOT PERMITTED IN OTHER LOCATIONS UNLESS WRITTEN APPROVAL IS OBTAINED FROM THE ENGINEER. MECHANICAL LAP SPLICES SHALL BE ABLE TO DEVELOP A MINIMUM OF 125% OF THE SPECIFIED YIELD STRENGTH OF THE REINFORCING STEEL BARS. ALL MECHANICAL LAP SPLICES SHALL BE PROVIDED IN CONFORMANCE WITH SECTION 611. PAYMENT FOR MECHANICAL LAP SPLICES WILL NOT BE MEASURED BUT THE COST WILL BE INCIDENTAL TO ITEM 611000 - BAR REINFORCEMENT.

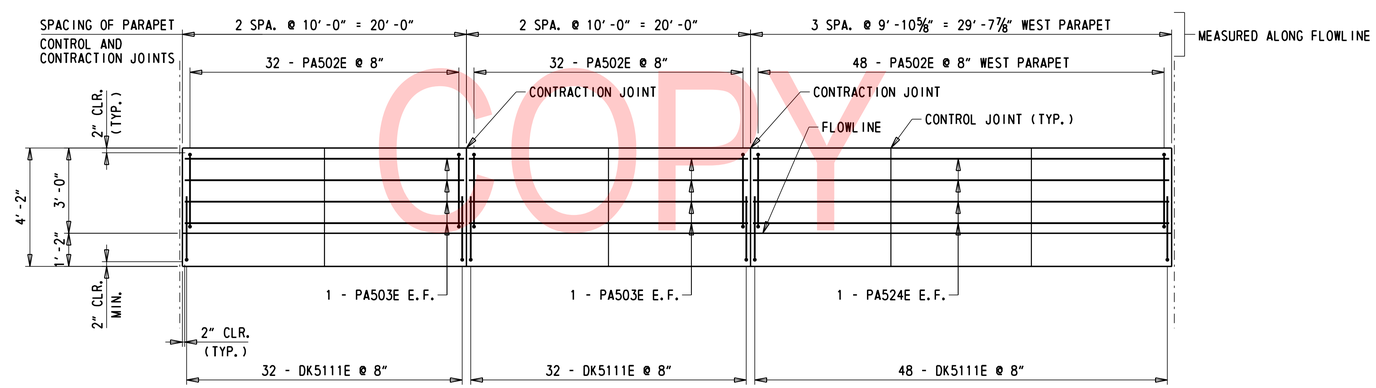

PARAPET REINFORCEMENT DEVELOPED ELEVATION - SPAN 34S

HORIZONTAL - 3/16" = 1'-0"
VERTICAL - 3/8" = 1'-0"

N:\31987-004\Contract_Ramp_D\CADD\Bridge\BR1-748S_DK09.dgn
8/23/2019 4:31:24 PM

ADDENDA / REVISIONS	SCALE AS NOTED	REHABILITATION OF I-95, 2ND STREET ON-RAMP IMPROVEMENTS	CONTRACT T201907402	BRIDGE NO. 1 748S 059	DECK SLAB AND PARAPET REINFORCEMENT SPAN 34S	DK-09
			COUNTY NEW CASTLE	DESIGNED BY: D. NIZAMOFF		SECTION WRA
				CHECKED BY: W. GESCHREI		SHEET NO. 102

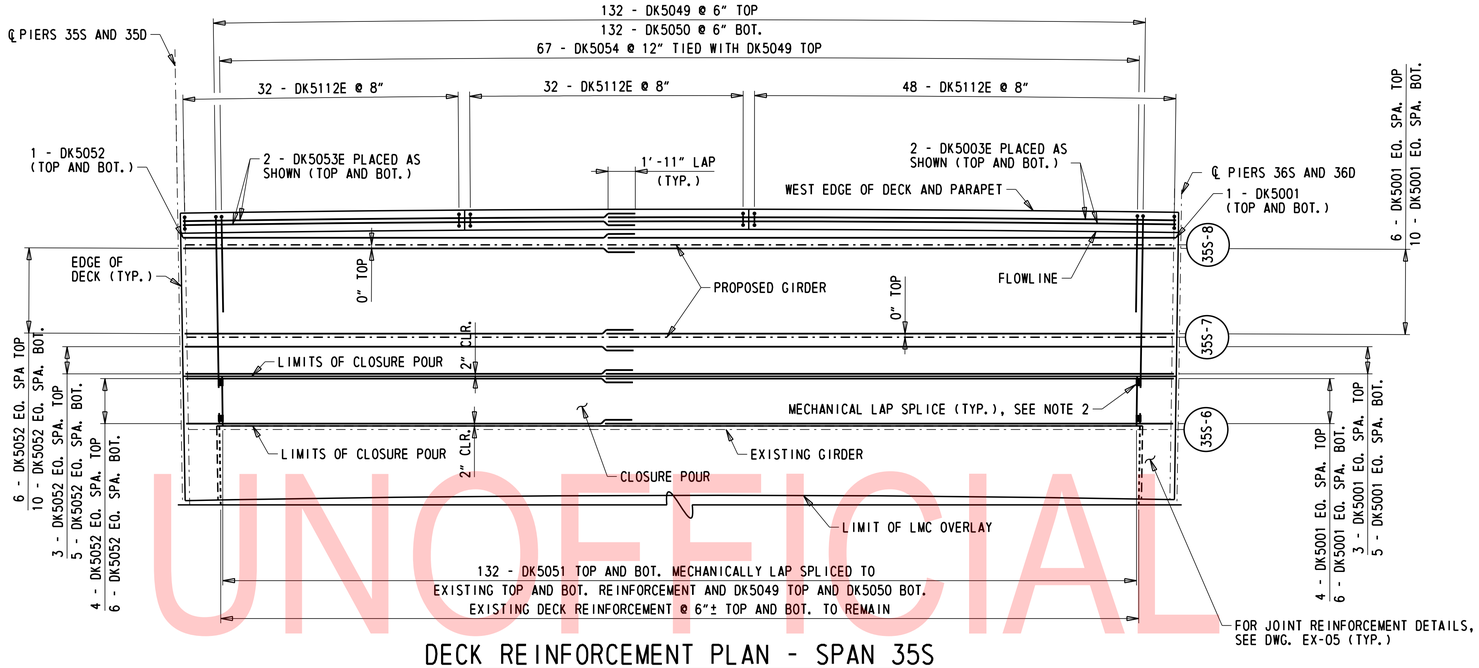

DECK REINFORCEMENT PLAN - SPAN 35S

3/16" = 1'-0"

UNOFFICIAL WEBSITE COPY

NOTES:

1. FOR ADDITIONAL DECK AND PARAPET REINFORCEMENT DETAILS, SEE TYPICAL SECTION ON DWG. DK-15.
2. PROVIDE MECHANICAL LAP SPLICES AT LOCATIONS SHOWN ON THE PLANS. MECHANICAL SPLICES ARE NOT PERMITTED IN OTHER LOCATIONS UNLESS WRITTEN APPROVAL IS OBTAINED FROM THE ENGINEER. MECHANICAL LAP SPLICES SHALL BE ABLE TO DEVELOP A MINIMUM OF 125% OF THE SPECIFIED YIELD STRENGTH OF THE REINFORCING STEEL BARS. ALL MECHANICAL LAP SPLICES SHALL BE PROVIDED IN CONFORMANCE WITH SECTION 611. PAYMENT FOR MECHANICAL LAP SPLICES WILL NOT BE MEASURED BUT THE COST WILL BE INCIDENTAL TO ITEM 611000 - BAR REINFORCEMENT.

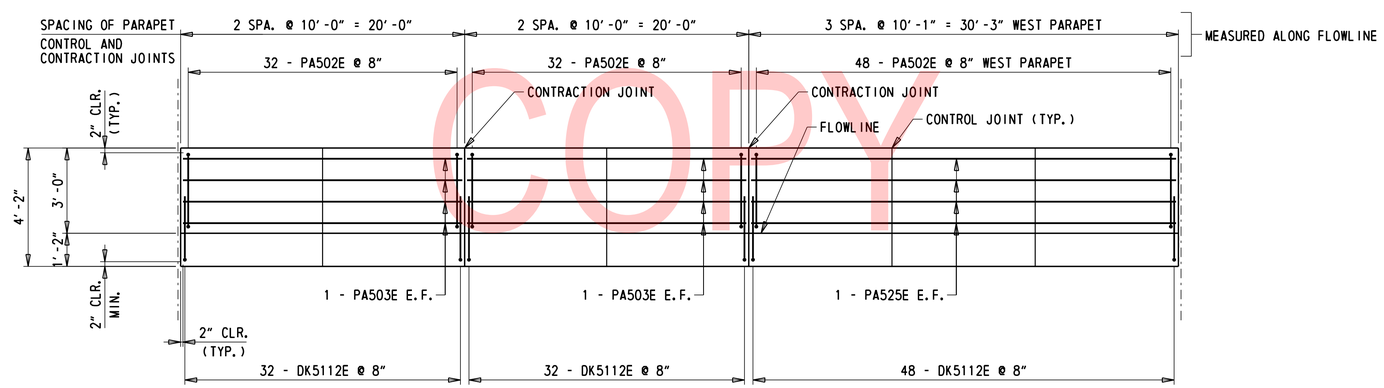

PARAPET REINFORCEMENT DEVELOPED ELEVATION - SPAN 35S

HORIZONTAL - 3/16" = 1'-0"
VERTICAL - 3/8" = 1'-0"

N:\31987-004\Contract_Ramp_D\CADD\Bridge\BR1-748S_DK10.dgn
8/23/2019 4:31:25 PM

ADDENDA / REVISIONS	SCALE AS NOTED	REHABILITATION OF I-95, 2ND STREET ON-RAMP IMPROVEMENTS	CONTRACT T201907402	BRIDGE NO. 1 748S 059	DECK SLAB AND PARAPET REINFORCEMENT SPAN 35S	DK-10
			COUNTY NEW CASTLE	DESIGNED BY: D. NIZAMOFF		SECTION WRA
				CHECKED BY: W. GESCHREI		SHEET NO. 103

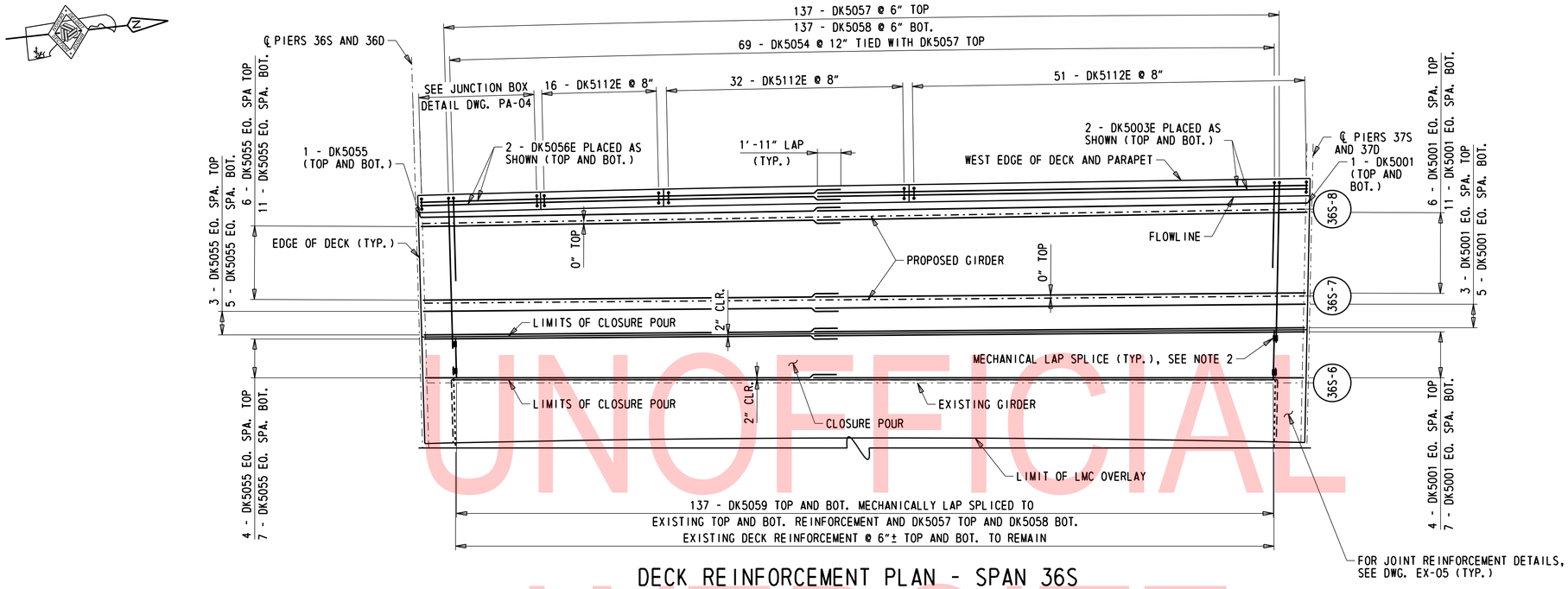

DECK REINFORCEMENT PLAN - SPAN 36S

1/16" = 1'-0"

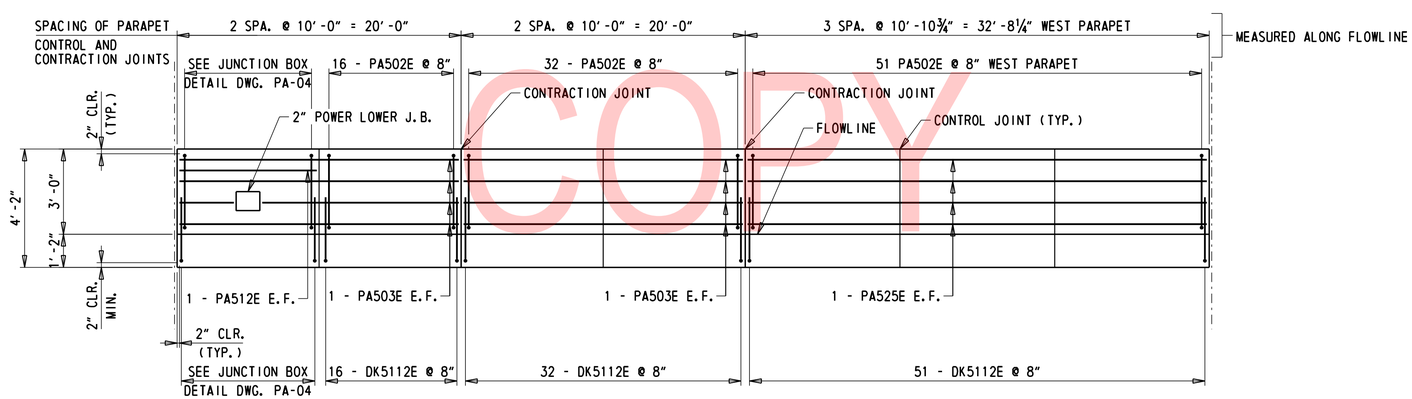

PARAPET REINFORCEMENT DEVELOPED ELEVATION - SPAN 36S

HORIZONTAL - 1/4" = 1'-0"
VERTICAL - 3/8" = 1'-0"

NOTES:

1. FOR ADDITIONAL DECK AND PARAPET REINFORCEMENT DETAILS, SEE TYPICAL SECTION ON DWG. DK-15.
2. PROVIDE MECHANICAL LAP SPLICES AT LOCATIONS SHOWN ON THE PLANS. MECHANICAL SPLICES ARE NOT PERMITTED IN OTHER LOCATIONS UNLESS WRITTEN APPROVAL IS OBTAINED FROM THE ENGINEER. MECHANICAL LAP SPLICES SHALL BE ABLE TO DEVELOP A MINIMUM OF 125% OF THE SPECIFIED YIELD STRENGTH OF THE REINFORCING STEEL BARS. ALL MECHANICAL LAP SPLICES SHALL BE PROVIDED IN CONFORMANCE WITH SECTION 611. PAYMENT FOR MECHANICAL LAP SPLICES WILL NOT BE MEASURED BUT THE COST WILL BE INCIDENTAL TO ITEM 611000 - BAR REINFORCEMENT.

UNOFFICIAL WEBSITE COPY

N:\31987-004\Contract_Ramp_D\CADD\Bridge\BR1-748S_DK11.dgn
8/23/2019 4:31:26 PM

ADDENDA / REVISIONS	SCALE AS NOTED	REHABILITATION OF I-95, 2ND STREET ON-RAMP IMPROVEMENTS	CONTRACT T201907402	BRIDGE NO. 1 748S 059	DECK SLAB AND PARAPET REINFORCEMENT SPAN 36S	DK-11
			COUNTY NEW CASTLE	DESIGNED BY: D. NIZAMOFF		SECTION WRA
				CHECKED BY: W. GESCHREI		SHEET NO. 104

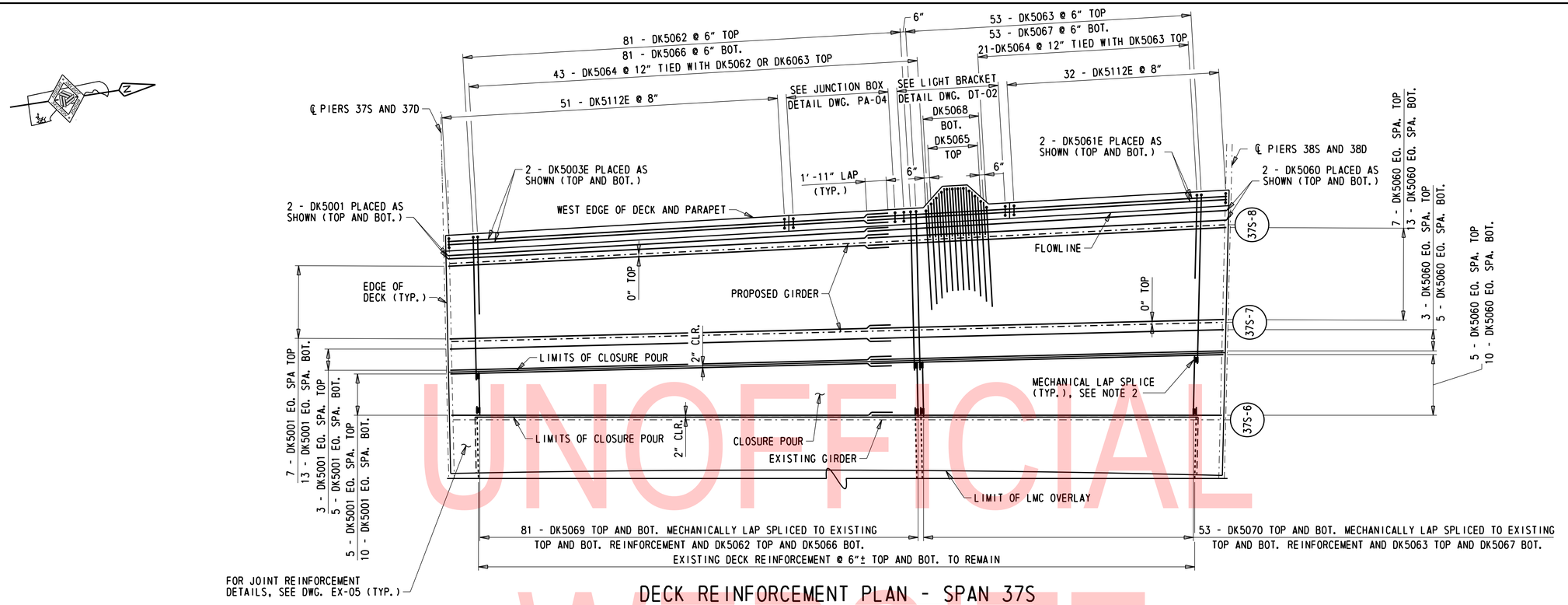

DECK REINFORCEMENT PLAN - SPAN 37S

3/16" = 1'-0"

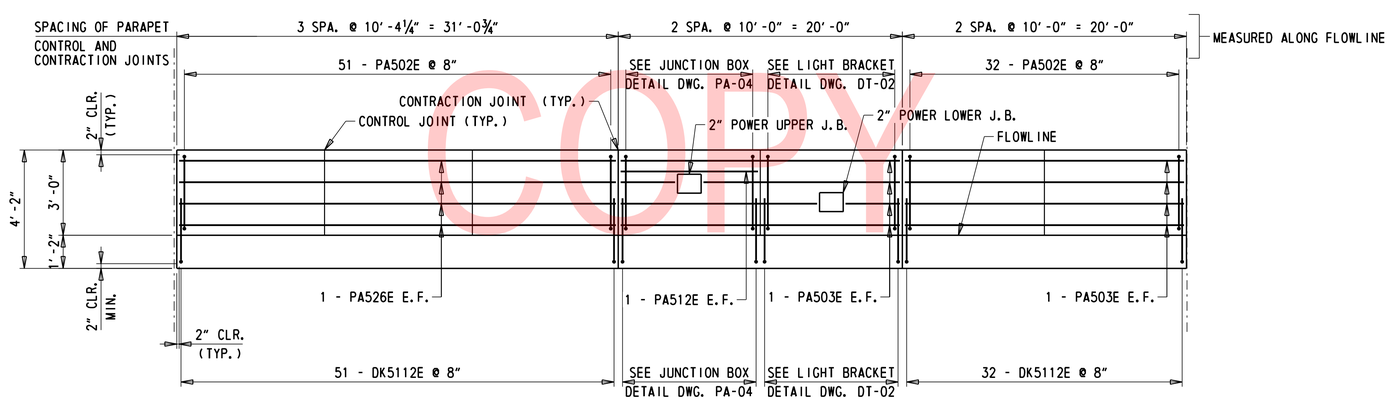

PARAPET REINFORCEMENT DEVELOPED ELEVATION - SPAN 37S

HORIZONTAL - 3/16" = 1'-0"
VERTICAL - 3/8" = 1'-0"

NOTES:

1. FOR ADDITIONAL DECK AND PARAPET REINFORCEMENT DETAILS, SEE TYPICAL SECTION ON DWG. DK-15.
2. PROVIDE MECHANICAL LAP SPLICES AT LOCATIONS SHOWN ON THE PLANS. MECHANICAL SPLICES ARE NOT PERMITTED IN OTHER LOCATIONS UNLESS WRITTEN APPROVAL IS OBTAINED FROM THE ENGINEER. MECHANICAL LAP SPLICES SHALL BE ABLE TO DEVELOP A MINIMUM OF 125% OF THE SPECIFIED YIELD STRENGTH OF THE REINFORCING STEEL BARS. ALL MECHANICAL LAP SPLICES SHALL BE PROVIDED IN CONFORMANCE WITH SECTION 611. PAYMENT FOR MECHANICAL LAP SPLICES WILL NOT BE MEASURED BUT THE COST WILL BE INCIDENTAL TO ITEM 611000 - BAR REINFORCEMENT.
3. DUE TO DECK CURVE, FIELD TRIMMING OF BARS DK5062, DK5063, DK5066, DK5067, DK5068, DK5069, AND DK5070 MAY BE NECESSARY.

UNOFFICIAL WEBSITE COPY

N:\31987-004\Contract_Ramp_D\CADD\Bridge\BR1-748S_DK12.dgn
8/23/2019 4:31:27 PM

ADDENDA / REVISIONS	SCALE AS NOTED	REHABILITATION OF I-95, 2ND STREET ON-RAMP IMPROVEMENTS	CONTRACT T201907402	BRIDGE NO. 1 748S 059	DECK SLAB AND PARAPET REINFORCEMENT SPAN 37S	DK-12
			COUNTY NEW CASTLE	DESIGNED BY: D. NIZAMOFF		SECTION WRA
				CHECKED BY: W. GESCHREI		SHEET NO. 105

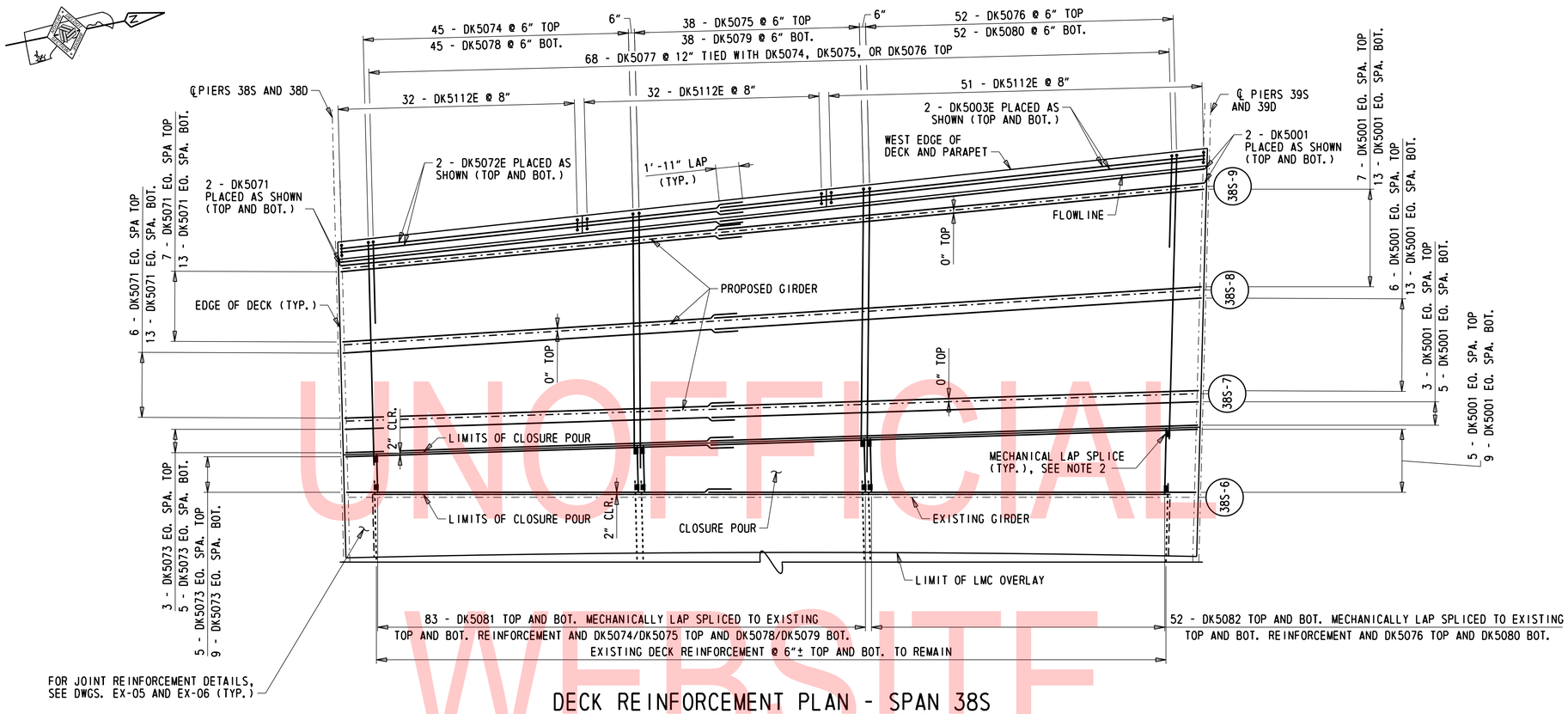

DECK REINFORCEMENT PLAN - SPAN 38S

1/16" = 1'-0"

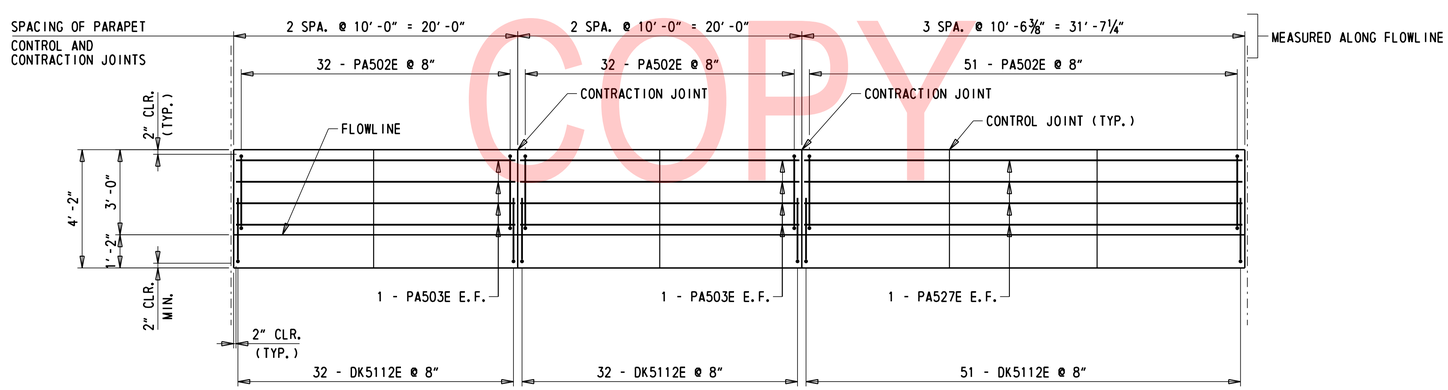

PARAPET REINFORCEMENT DEVELOPED ELEVATION - SPAN 38S

HORIZONTAL - 1/16" = 1'-0"
VERTICAL - 3/8" = 1'-0"

NOTES:

1. FOR ADDITIONAL DECK AND PARAPET REINFORCEMENT DETAILS, SEE TYPICAL SECTION ON DWG. DK-15.
2. PROVIDE MECHANICAL LAP SPLICES AT LOCATIONS SHOWN ON THE PLANS. MECHANICAL SPLICES ARE NOT PERMITTED IN OTHER LOCATIONS UNLESS WRITTEN APPROVAL IS OBTAINED FROM THE ENGINEER. MECHANICAL LAP SPLICES SHALL BE ABLE TO DEVELOP A MINIMUM OF 125% OF THE SPECIFIED YIELD STRENGTH OF THE REINFORCING STEEL BARS. ALL MECHANICAL LAP SPLICES SHALL BE PROVIDED IN CONFORMANCE WITH SECTION 611. PAYMENT FOR MECHANICAL LAP SPLICES WILL NOT BE MEASURED BUT THE COST WILL BE INCIDENTAL TO ITEM 611000 - BAR REINFORCEMENT.
3. DUE TO DECK CURVE, FIELD TRIMMING OF BARS DK5074, DK5075, DK5076, DK5078, DK5079, DK5080, DK5081, AND DK5082 MAY BE NECESSARY.

UNOFFICIAL WEBSITE COPY

ADDENDA / REVISIONS	SCALE AS NOTED	REHABILITATION OF I-95, 2ND STREET ON-RAMP IMPROVEMENTS	CONTRACT T201907402	BRIDGE NO. 1 748S 059	DECK SLAB AND PARAPET REINFORCEMENT SPAN 38S	DK-13
			COUNTY NEW CASTLE	DESIGNED BY: D. NIZAMOFF		SECTION WRA
				CHECKED BY: W. GESCHREI		SHEET NO. 106

N:\31987-004\Contract_Ramp_D\CADD\Bridge\BRI-748S_DK13.dgn
8/23/2019 4:31:27 PM

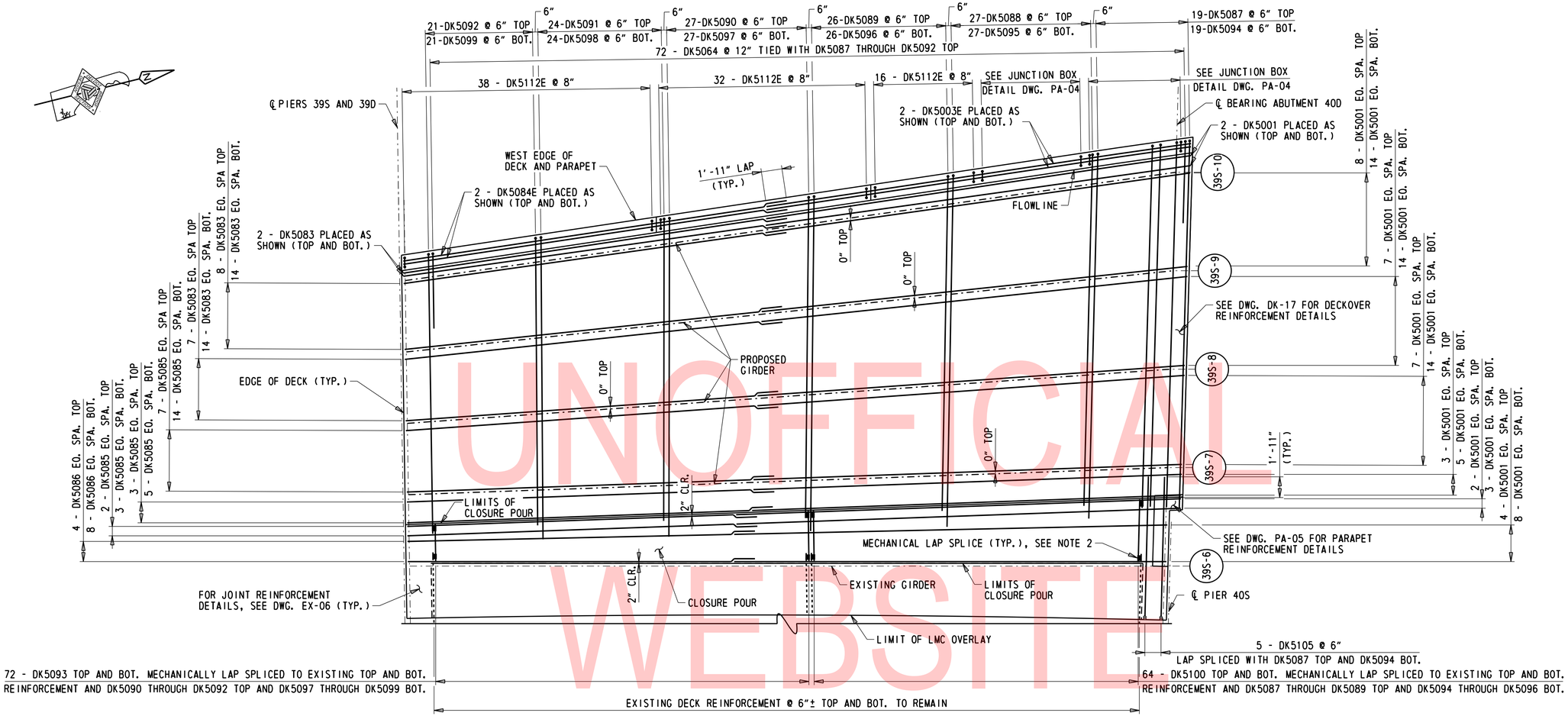

DECK REINFORCEMENT PLAN - SPAN 39S

3/16" = 1'-0"

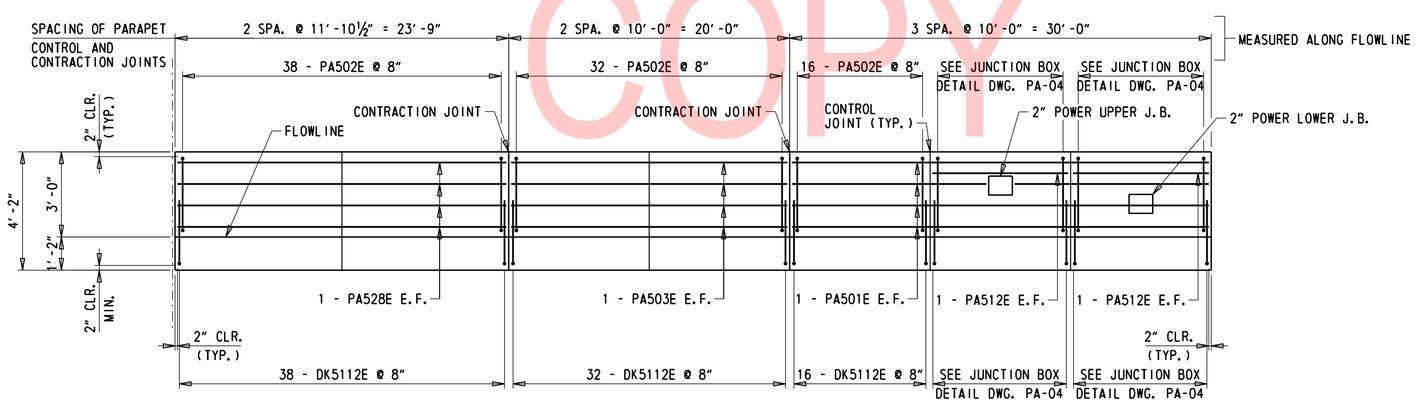

PARAPET REINFORCEMENT DEVELOPED ELEVATION - SPAN 39S

HORIZONTAL - 3/16" = 1'-0"
VERTICAL - 3/8" = 1'-0"

NOTES:

1. FOR ADDITIONAL DECK AND PARAPET REINFORCEMENT DETAILS, SEE TYPICAL SECTION ON DWG. DK-16. FOR ADDITIONAL DECK REINFORCEMENT AT ABUTMENT, SEE DWG. DK-17.
2. PROVIDE MECHANICAL LAP SPLICES AT LOCATIONS SHOWN ON THE PLANS. MECHANICAL SPLICES ARE NOT PERMITTED IN OTHER LOCATIONS UNLESS WRITTEN APPROVAL IS OBTAINED FROM THE ENGINEER. MECHANICAL LAP SPLICES SHALL BE ABLE TO DEVELOP A MINIMUM OF 125% OF THE SPECIFIED YIELD STRENGTH OF THE REINFORCING STEEL BARS. ALL MECHANICAL LAP SPLICES SHALL BE PROVIDED IN CONFORMANCE WITH SECTION 611. PAYMENT FOR MECHANICAL LAP SPLICES WILL NOT BE MEASURED BUT THE COST WILL BE INCIDENTAL TO ITEM 611000 - BAR REINFORCEMENT.
3. DUE TO DECK CURVE, FIELD TRIMMING OF BARS DK5087, DK5088, DK5089, DK5090, DK5091, DK5092, DK5093, DK5094, DK5095, DK5096, DK5097, DK5098, DK5099, AND DK5100 MAY BE NECESSARY.

UNOFFICIAL WEBSITE COPY

N:\31987-004\Contract_Ramp_D\CADD\Bridge\BR1-748S_DK14.dgn
8/23/2019 4:31:28 PM

ADDENDA / REVISIONS	SCALE AS NOTED	REHABILITATION OF I-95, 2ND STREET ON-RAMP IMPROVEMENTS	CONTRACT T201907402	BRIDGE NO. 1 748S 059	DECK SLAB AND PARAPET REINFORCEMENT SPAN 39S	DK-14
			COUNTY NEW CASTLE	DESIGNED BY: D. NIZAMOFF		SECTION WRA
				CHECKED BY: W. GESCHREI		SHEET NO. 107

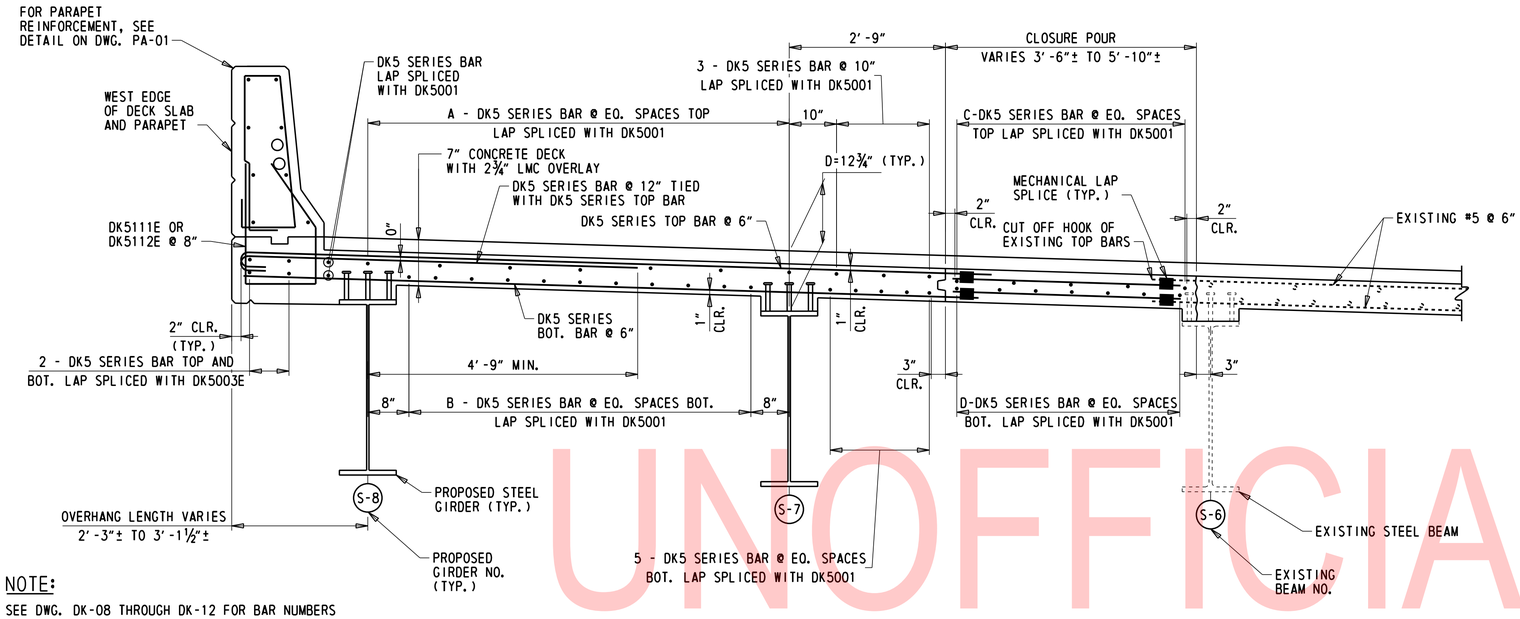

NOTE:

SEE DWG. DK-08 THROUGH DK-12 FOR BAR NUMBERS

DECK TYPICAL REINFORCEMENT SECTION

(SPANS 33S, 34S, 35S, 36S, 37S)

¾″ = 1′-0″

NOTES:

1. STAY-IN-PLACE FORMS NOT SHOWN ON DECK TYPICAL REINFORCEMENT SECTION FOR CLARITY. SEE DWG. SD-01.
2. FOR PARAPET LONGITUDINAL BAR NUMBERS AND DECK LONGITUDINAL AND TRANSVERSE REINFORCEMENT, SEE DWG. DK-08 THROUGH DK-13.
3. FOR PARAPET CONTROL JOINT LAYOUT AND DETAILS, SEE DWGS. DK-08 THROUGH DK-13 AND PA-01.
4. PROVIDE MECHANICAL LAP SPLICES AT LOCATIONS SHOWN ON THE PLANS. MECHANICAL SPLICES ARE NOT PERMITTED IN OTHER LOCATIONS UNLESS WRITTEN APPROVAL IS OBTAINED FROM THE ENGINEER. MECHANICAL LAP SPLICES SHALL BE ABLE TO DEVELOP A MINIMUM OF 125% OF THE SPECIFIED YIELD STRENGTH OF THE REINFORCING STEEL BARS. ALL MECHANICAL LAP SPLICES SHALL BE PROVIDED IN CONFORMANCE WITH SECTION 611. PAYMENT FOR MECHANICAL LAP SPLICES WILL NOT BE MEASURED BUT THE COST WILL BE INCIDENTAL TO ITEM 611000 - BAR REINFORCEMENT.

NUMBER OF LONGITUDINAL #5 BARS REQUIRED IN BAYS

	A	B	C	D
SPAN 33S	6	10	4	6
SPAN 34S	6	10	4	6
SPAN 35S	6	10	4	6
SPAN 36S	6	11	4	7
SPAN 37S	7	13	5	10

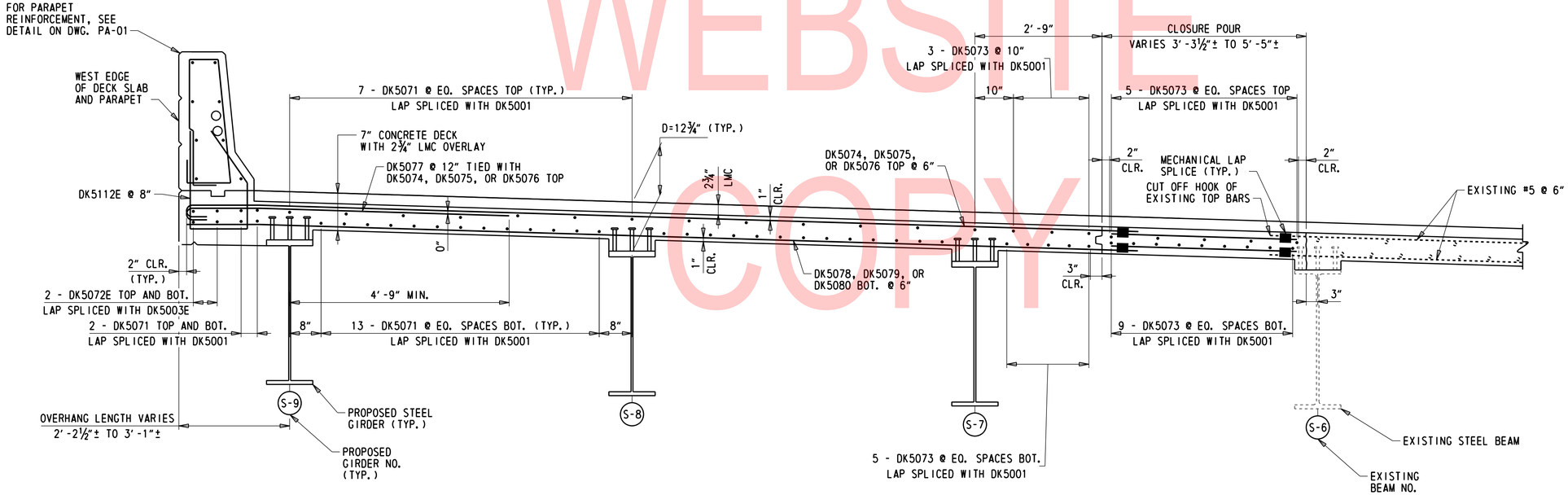

DECK TYPICAL REINFORCEMENT SECTION

(SPAN 38S)

¾″ = 1′-0″

UNOFFICIAL WEBSITE COPY

N:\31987-004\Contract_Ramp_D\CADD\Bridge\BR1-748S_DK15.dgn
8/23/2019 4:31:29 PM

ADDENDA / REVISIONS		SCALE AS NOTED	REHABILITATION OF I-95, 2ND STREET ON-RAMP IMPROVEMENTS	CONTRACT T201907402	BRIDGE NO. 1 748S 059	DECK SLAB TYPICAL REINFORCEMENT SECTION 1 OF 2	DK-15
				COUNTY NEW CASTLE	DESIGNED BY: D. NIZAMOFF		SECTION WRA
					CHECKED BY: W. GESCHREI		SHEET NO. 108

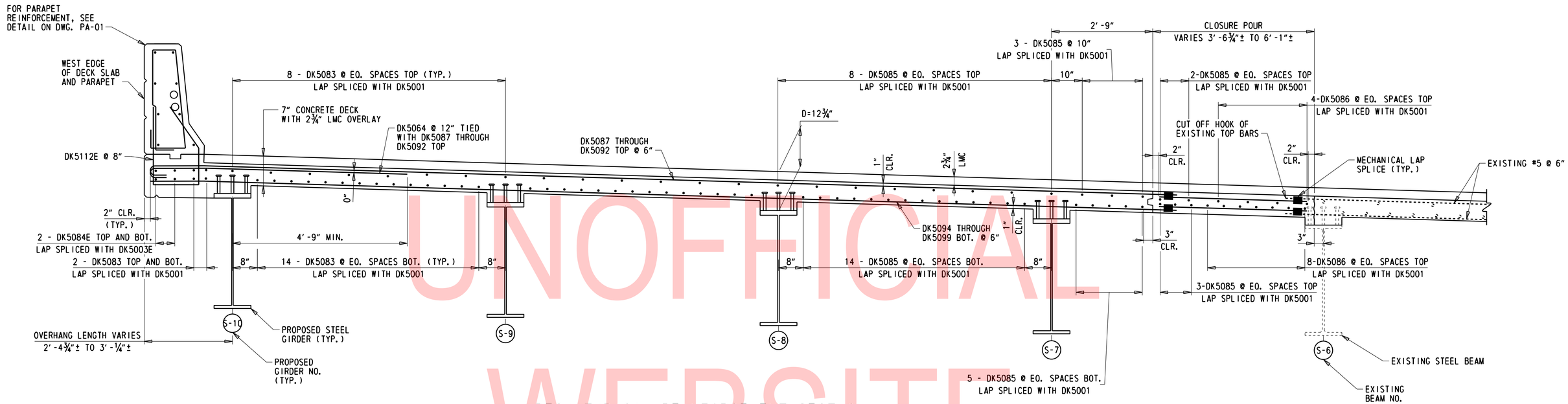

DECK TYPICAL REINFORCEMENT SECTION

(SPAN 39S)

¾" = 1'-0"

UNOFFICIAL WEBSITE COPY

NOTES:

1. STAY-IN-PLACE FORMS NOT SHOWN ON DECK TYPICAL REINFORCEMENT SECTION FOR CLARITY. SEE DWG. SD-01.
2. FOR PARAPET LONGITUDINAL BAR NUMBERS AND DECK LONGITUDINAL AND TRANSVERSE REINFORCEMENT, SEE DWG. DK-14.
3. FOR PARAPET CONTROL JOINT LAYOUT AND DETAILS, SEE DWGS. DK-14 AND PA-01.
4. PROVIDE MECHANICAL LAP SPLICES AT LOCATIONS SHOWN ON THE PLANS. MECHANICAL SPLICES ARE NOT PERMITTED IN OTHER LOCATIONS UNLESS WRITTEN APPROVAL IS OBTAINED FROM THE ENGINEER. MECHANICAL LAP SPLICES SHALL BE ABLE TO DEVELOP A MINIMUM OF 125% OF THE SPECIFIED YIELD STRENGTH OF THE REINFORCING STEEL BARS. ALL MECHANICAL LAP SPLICES SHALL BE PROVIDED IN CONFORMANCE WITH SECTION 611. PAYMENT FOR MECHANICAL LAP SPLICES WILL NOT BE MEASURED BUT THE COST WILL BE INCIDENTAL TO ITEM 611000 - BAR REINFORCEMENT.

N:\31987-004\Contract_Ramp_D\CADD\Bridge\BR1-748S_DK16.dgn
8/23/2019 4:31:29 PM

ADDENDA / REVISIONS		SCALE AS NOTED	REHABILITATION OF I-95, 2ND STREET ON-RAMP IMPROVEMENTS	CONTRACT T201907402	BRIDGE NO. 1 748S 059	DECK SLAB TYPICAL REINFORCEMENT SECTION 2 OF 2	DK-16
				COUNTY NEW CASTLE	DESIGNED BY: D. NIZAMOFF		SECTION WRA
					CHECKED BY: W. GESCHREI		SHEET NO. 109

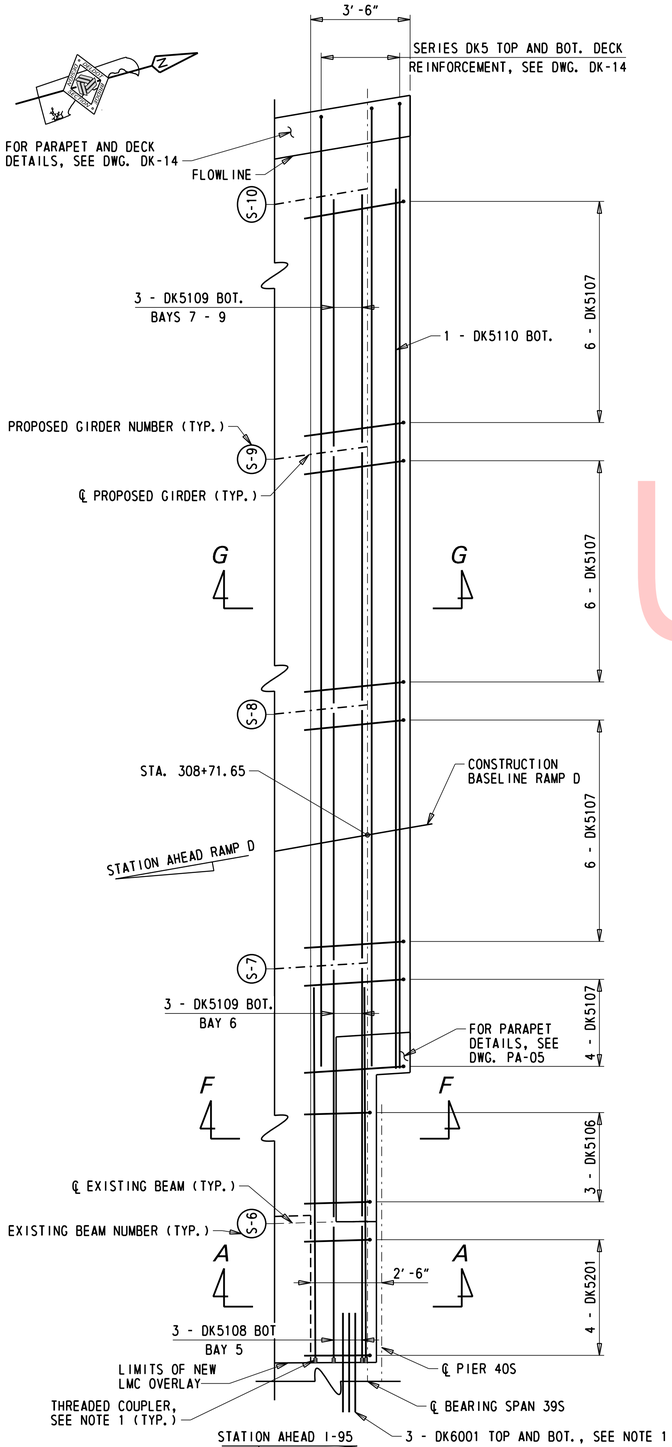

PLAN - ABUTMENT 40D

⅜" = 1'-0"

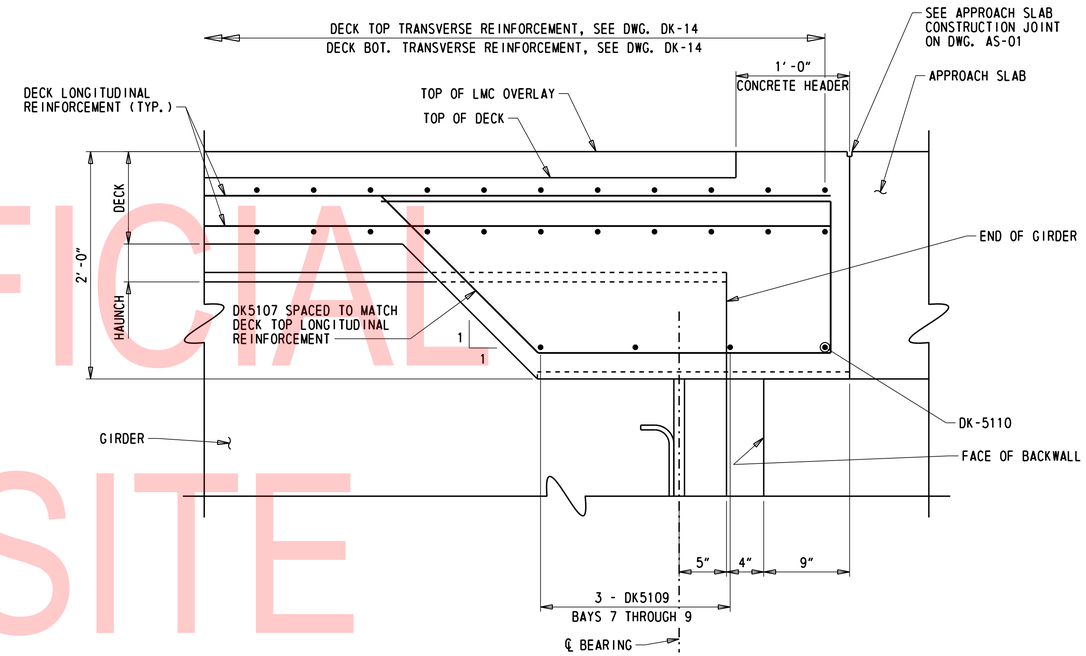

SECTION G-G

1½" = 1'-0"

UNOFFICIAL WEBSITE COPY

NOTES:

1. FOR THREADED COUPLER DETAIL AND DETAILS FOR DOWEL DK6001, SEE THREADED COUPLER MECHANICAL SPLICE DETAIL ON DWG. EX-06.
2. FOR ADDITIONAL DECK AND PARAPET REINFORCEMENT DETAILS, SEE DWG. DK-14.

N:\31987-004\Contract_Ramp_D\CADD\Bridge\BRI-748S_DK17.dgn
8/23/2019 4:31:50 PM

ADDENDA / REVISIONS	SCALE AS NOTED	REHABILITATION OF I-95, 2ND STREET ON-RAMP IMPROVEMENTS	CONTRACT T201907402	BRIDGE NO. 1 748S 059	DECK JOINT DETAIL ABUTMENT 40	DK-17
			COUNTY NEW CASTLE	DESIGNED BY: D. NIZAMOFF		SECTION WRA
				CHECKED BY: W. GESCHREI		SHEET NO. 110

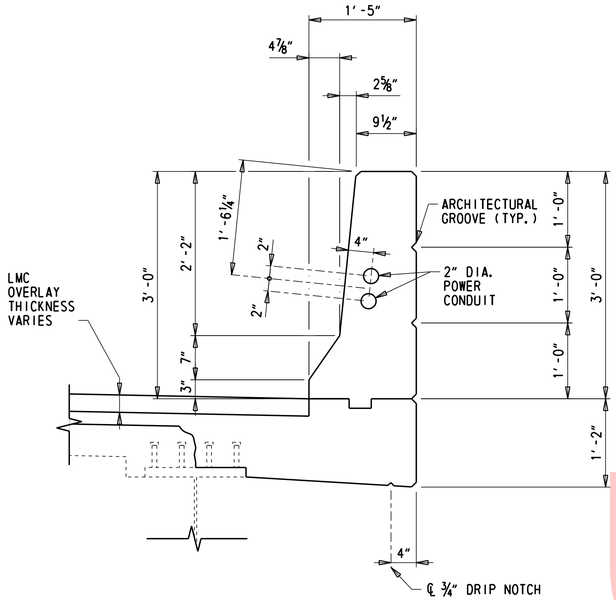

1'-5" WIDE PARAPET DETAIL

1" = 1'-0"

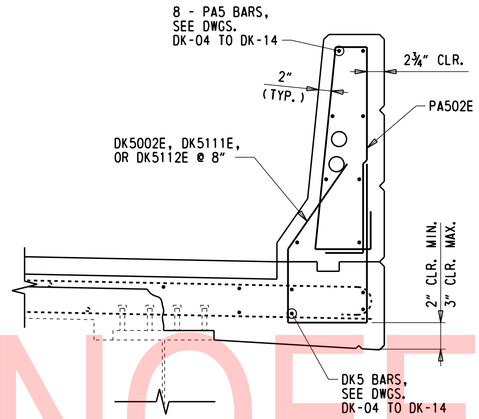

1'-5" WIDE PARAPET REINFORCEMENT

1" = 1'-0"

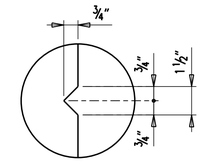

ARCHITECTURAL GROOVE DETAIL

3" = 1'-0"

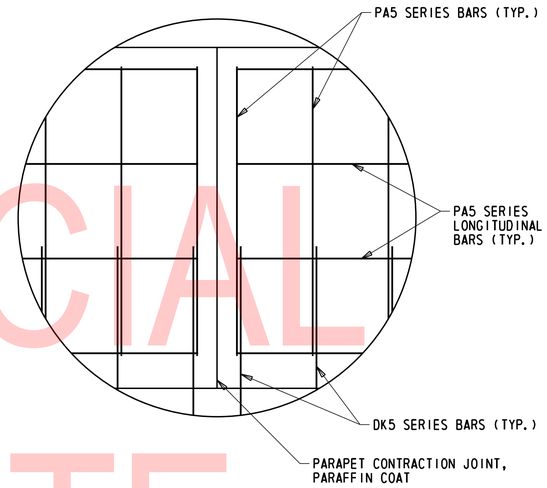

PARAPET CONTRACTION JOINT DETAIL

1½" = 1'-0"

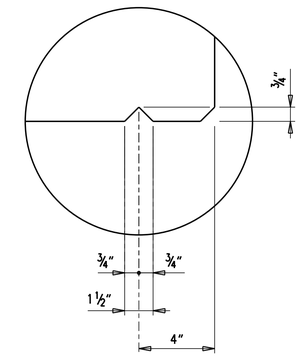

DRIP NOTCH DETAIL

3" = 1'-0"

NOTE:
1'-5" WIDE PARAPET DETAILS TO BE USED IN THE FOLLOWING SPANS:
SB SPANS 29S TO 39S

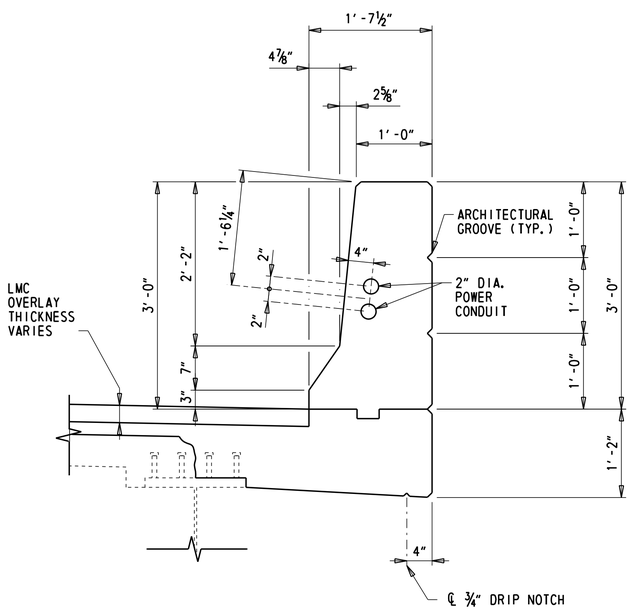

1'-7½" WIDE PARAPET DETAIL

1" = 1'-0"

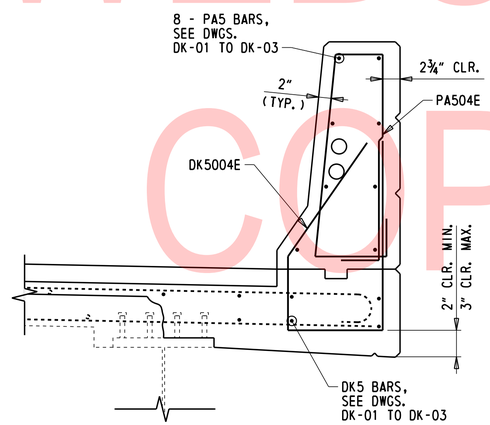

1'-7½" WIDE PARAPET REINFORCEMENT

1" = 1'-0"

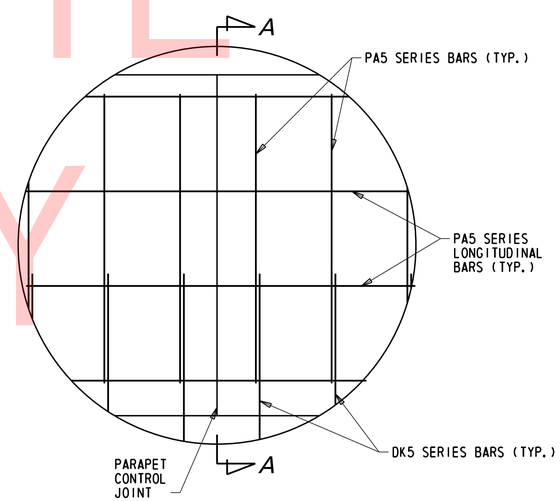

PARAPET CONTROL JOINT DETAIL

1½" = 1'-0"

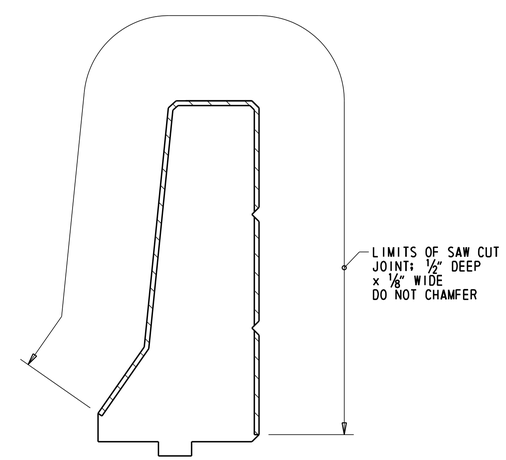

SECTION A-A

1½" = 1'-0"

REINFORCEMENT NOT SHOWN FOR CLARITY.

NOTE:
1'-7½" WIDE PARAPET DETAIL TO BE USED IN THE FOLLOWING SPANS:
SB SPANS 26S TO 28S

UNOFFICIAL WEBSITE COPY

ADDENDA / REVISIONS		SCALE AS NOTED	REHABILITATION OF I-95, 2ND STREET ON-RAMP IMPROVEMENTS	CONTRACT T201907402	BRIDGE NO. 1 748S 059	PARAPET DETAILS 1 OF 2	PA-01
				COUNTY NEW CASTLE	DESIGNED BY: D. NIZAMOFF		SECTION WRA
					CHECKED BY: W. GESCHREI		SHEET NO. 111

N:\31987-004\Contract_Ramp_D\CADD\Bridge\BRI-748S_PA01.dgn
8/23/2019 4:31:31 PM

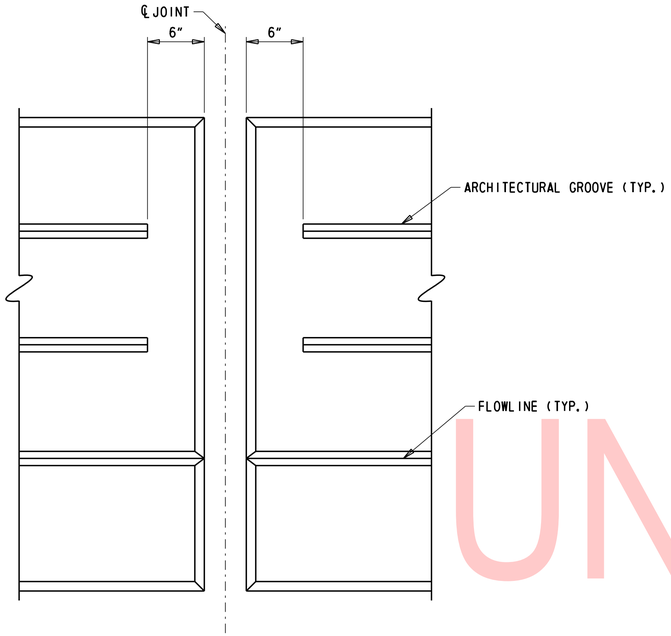

ARCHITECTURAL GROOVE TERMINATION DETAIL

1½" = 1'-0"

UNOFFICIAL WEBSITE COPY

N:\31987-004\Contract_Ramp_D\CADD\Bridge\BRI-748S_PA02.dgn
8/23/2019 4:31:32 PM

ADDENDA / REVISIONS		SCALE AS NOTED	REHABILITATION OF I-95, 2ND STREET ON-RAMP IMPROVEMENTS	CONTRACT T201907402	BRIDGE NO. 1 748S 059	PARAPET DETAILS 2 OF 2	PA-02
				COUNTY NEW CASTLE	DESIGNED BY: D. NIZAMOFF		SECTION WRA
					CHECKED BY: W. GESCHREI		SHEET NO. 112

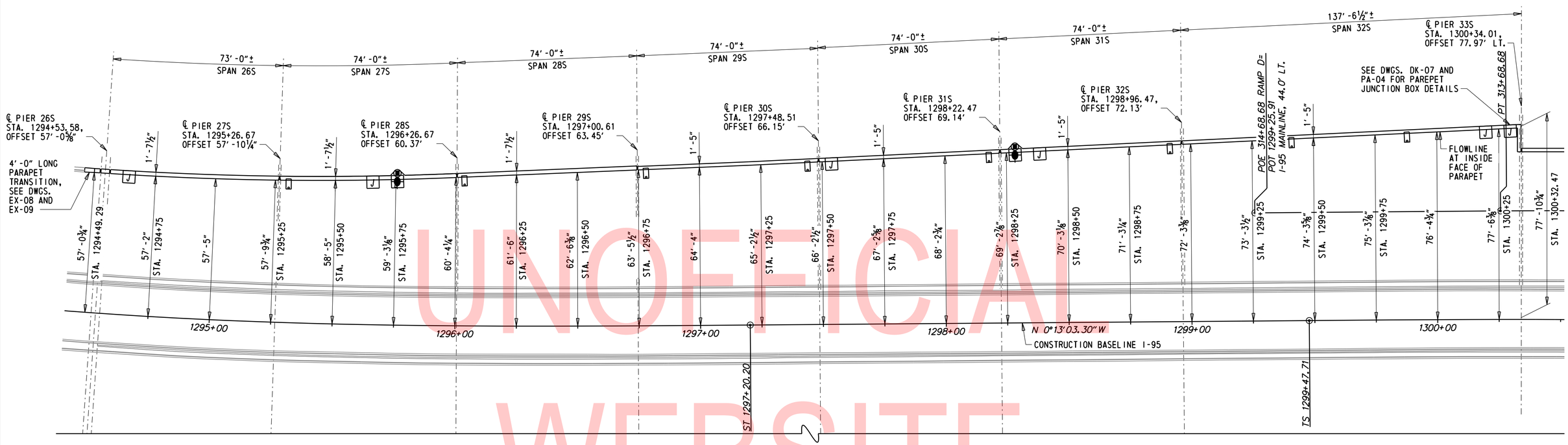

PLAN - EXTERIOR PARAPET LAYOUT, SPANS 26S TO 32S

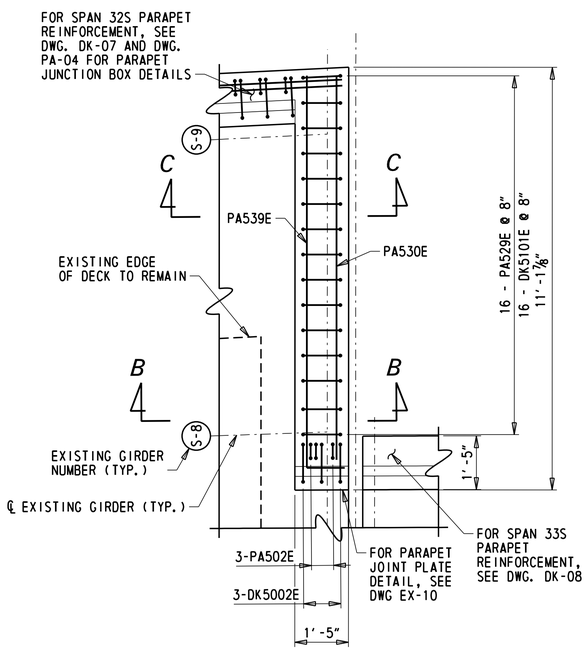

PLAN - RECTANGULAR PARAPET

½" = 1'-0"

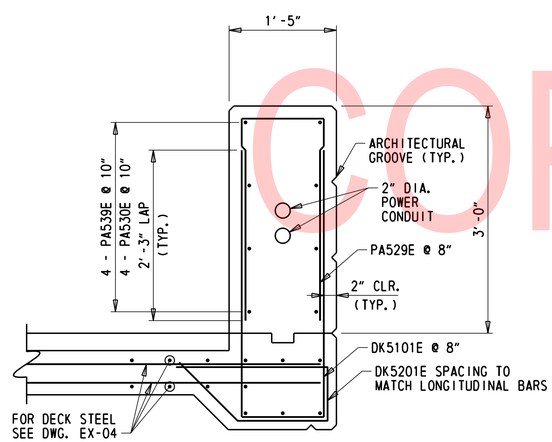

SECTION C-C

1" = 1'-0"

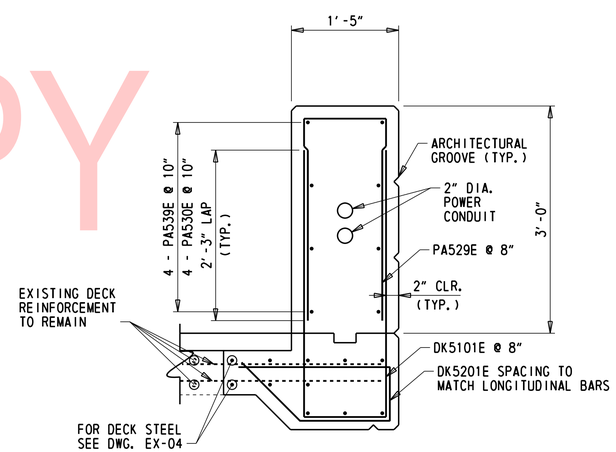

SECTION B-B

1" = 1'-0"

NOTES:

1. OFFSET DIMENSIONS BY STATION ARE MEASURED FROM CONSTRUCTION BASELINE I-95 TO FLOWLINE AT BASE OF PARAPET. MEASUREMENTS TAKEN PERPENDICULAR TO LOCAL TANGENT AT NOTED STATION.
2. FOR ADDITIONAL INFORMATION, SEE DWG. EX-04.

UNOFFICIAL WEBSITE COPY

ADDENDA / REVISIONS	SCALE 0 20 40 60 FEET	REHABILITATION OF I-95, 2ND STREET ON-RAMP IMPROVEMENTS	CONTRACT T201907402	BRIDGE NO. 1 748S 059	EXTERIOR PARAPET LAYOUT SPANS 26S TO 32S	PA-03
			COUNTY NEW CASTLE	DESIGNED BY: D. NIZAMOFF		SECTION WRA
				CHECKED BY: W. GESCHREI		SHEET NO. 113

N:\31987-004\Contract_Ramp_D\CADD\Bridge\BRI-748S_PA03.dgn 8/23/2019 4:33:34 PM

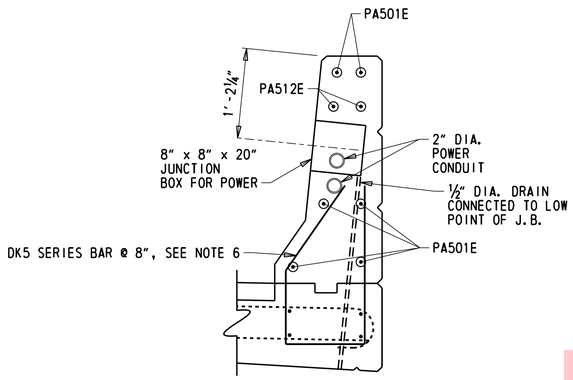

SECTION AT 2" POWER UPPER J.B.

1" = 1'-0"

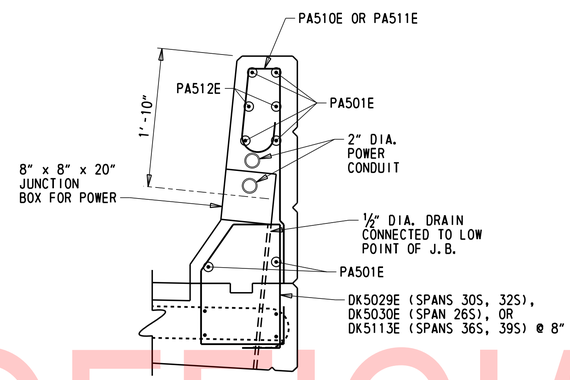

SECTION AT 2" POWER LOWER J.B.

1" = 1'-0"

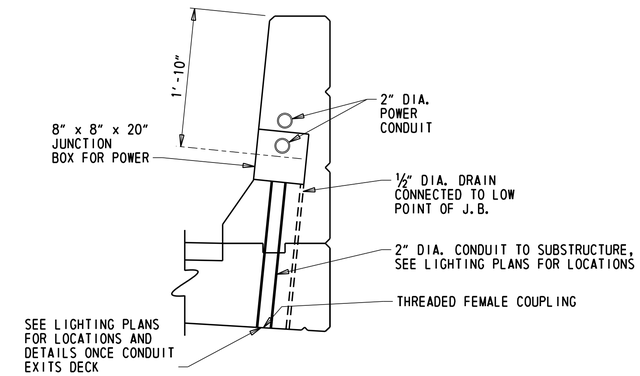

J.B. CONNECTION TO SUBSTRUCTURE POWER FEED AND LIGHTING

1" = 1'-0"

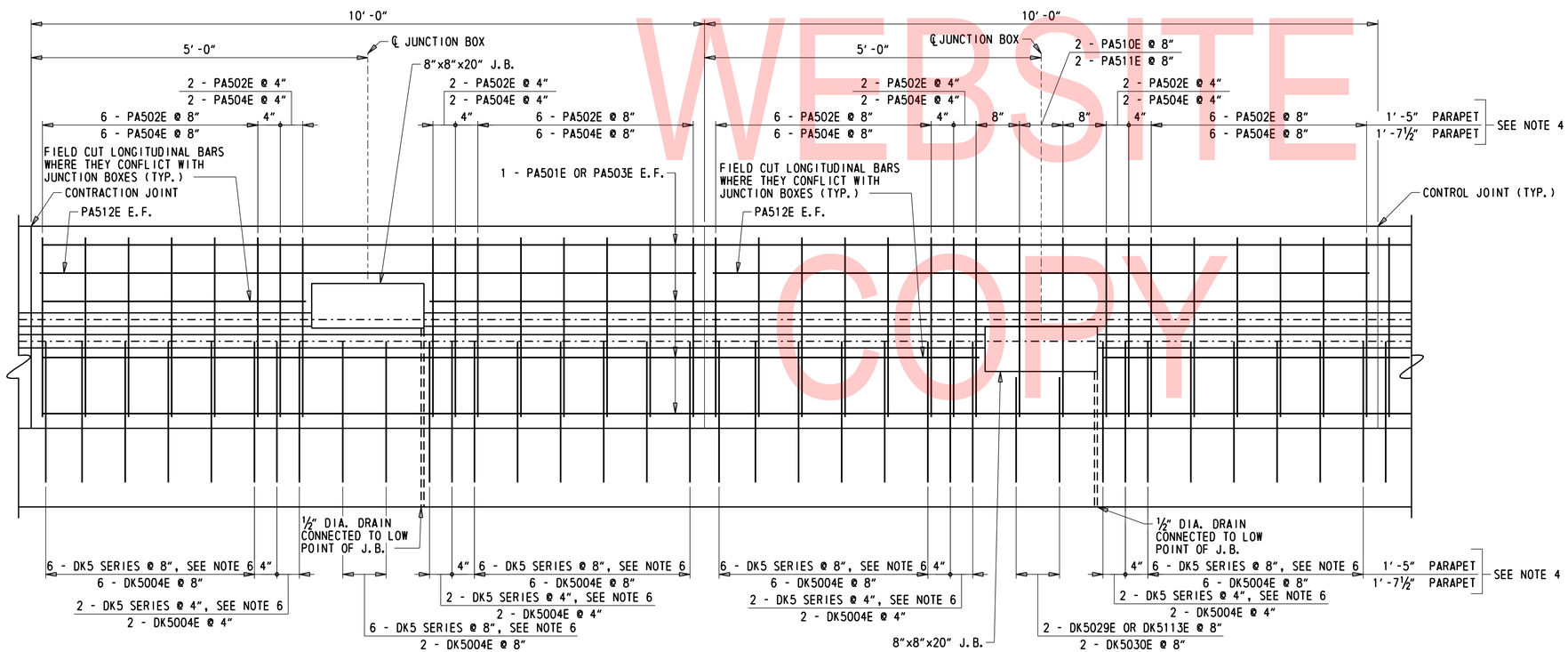

ELEVATION - PARAPET W/ J.B.'S ON BRIDGE

1" = 1'-0"

NOTES:

1. JUNCTION BOXES SHOULD BE PLACED CENTERED BETWEEN JOINTS IN THE PARAPET.
2. CONTRACTION, CONTROL, AND EXPANSION (NOT SHOWN) JOINTS ARE SHOWN FOR GRAPHICAL PURPOSES ONLY. JUNCTION BOXES MAY BE LOCATED BETWEEN ANY COMBINATION OF TWO.
3. FOR ADDITIONAL PARAPET AND REINFORCEMENT DETAILS, SEE DWG. PA-01.
4. 1'-7½" PARAPET APPLIES TO SPANS 26S TO 28S, SEE DWGS. PA-01 AND PA-03 FOR MORE INFORMATION.
5. COST OF JUNCTION BOXES, CONDUITS, AND DRAINS EMBEDDED IN PARAPETS AND DECK SHALL BE INCIDENTAL TO ITEM 610008 - PORTLAND CEMENT CONCRETE MASONRY, PARAPET, CLASS A.
6. DECK BAR INTO PARAPET IN 1'-5" PARAPET IS MARK DK5002E IN SPANS 29S THROUGH 32S, MARK DK111E IN SPANS 33S AND 34S, AND MARK DK5112E IN SPANS 35S THROUGH 39S.

UNOFFICIAL WEBSITE COPY

ADDENDA / REVISIONS		SCALE AS NOTED	REHABILITATION OF I-95, 2ND STREET ON-RAMP IMPROVEMENTS	CONTRACT T201907402	BRIDGE NO. 1 748S 059	PARAPET CONDUIT AND JUNCTION BOX DETAILS	PA-04 SECTION WRA
				COUNTY NEW CASTLE	DESIGNED BY: D. NIZAMOFF		SHEET NO. 114
					CHECKED BY: W. GESCHREI		

N:\31987-004\Contract_Ramp_D\CADD\Bridge\BR1-748S_PA04.dgn
8/23/2019 4:31:35 PM

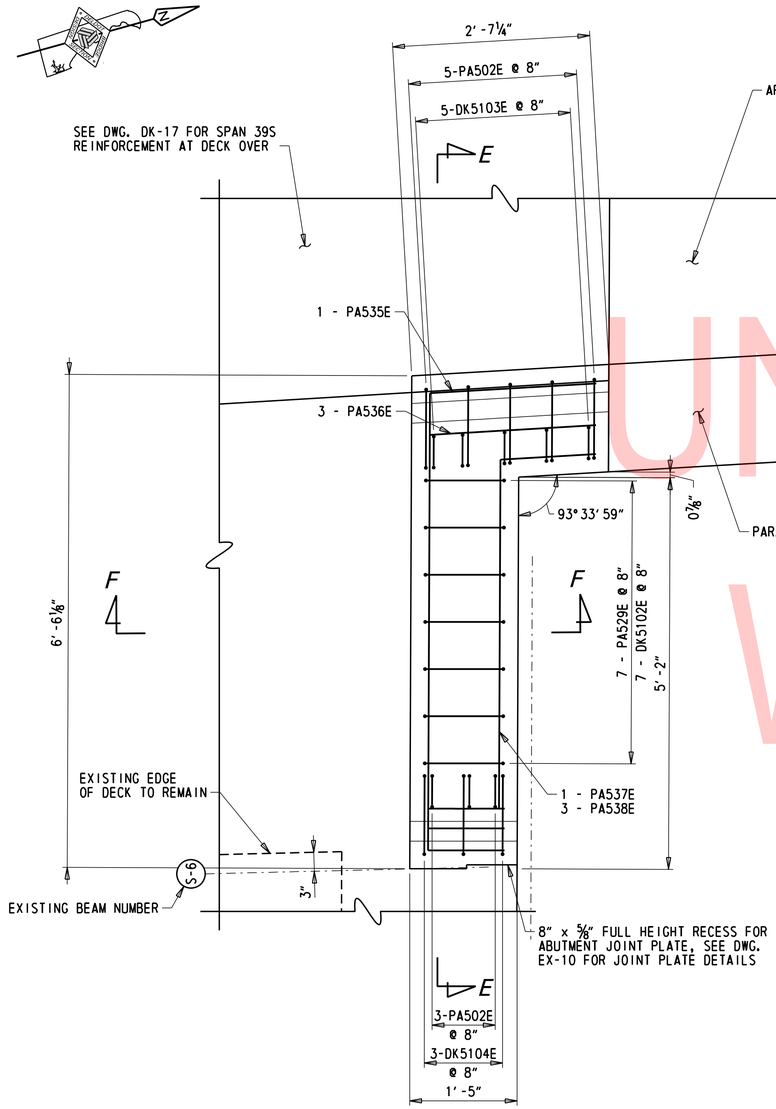

PLAN RECTANGULAR PARAPET

1" = 1'-0"

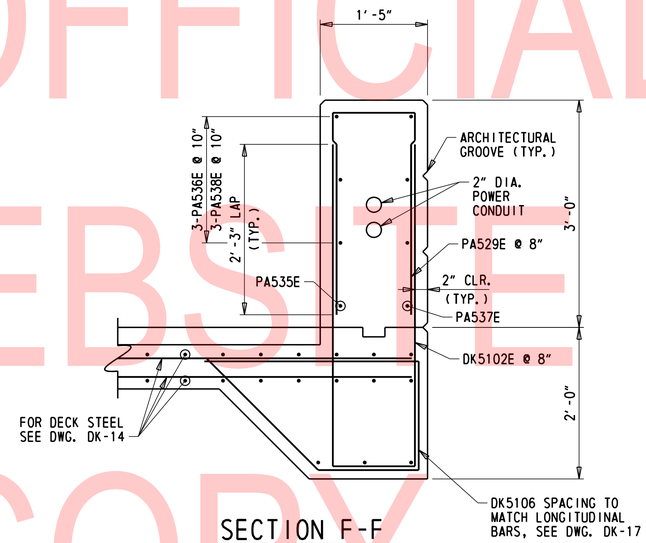

SECTION F-F

1" = 1'-0"

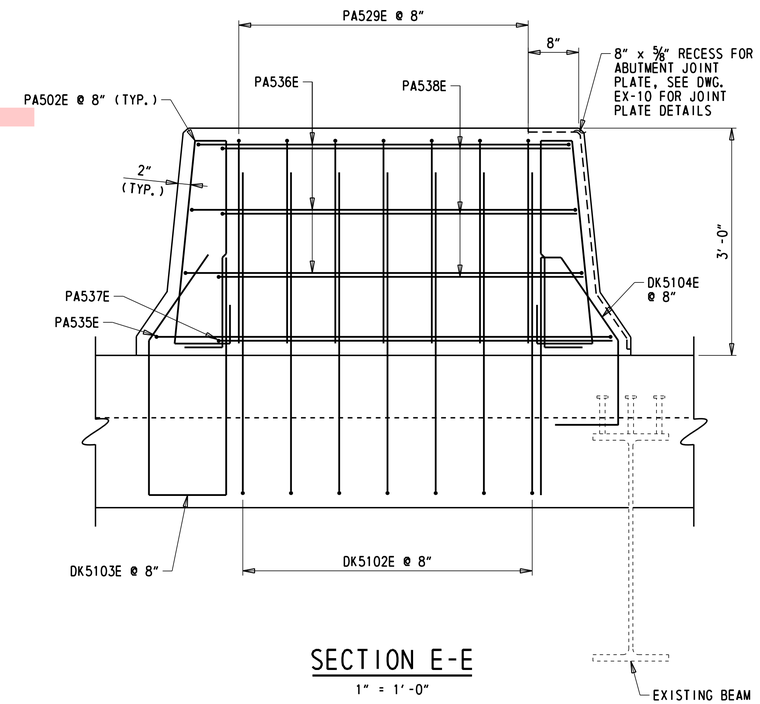

SECTION E-E

1" = 1'-0"

NOTE:

TYPICAL DECK REINFORCEMENT AND END DIAPHRAGM REINFORCEMENT NOT SHOWN FOR CLARITY.

UNOFFICIAL WEBSITE COPY

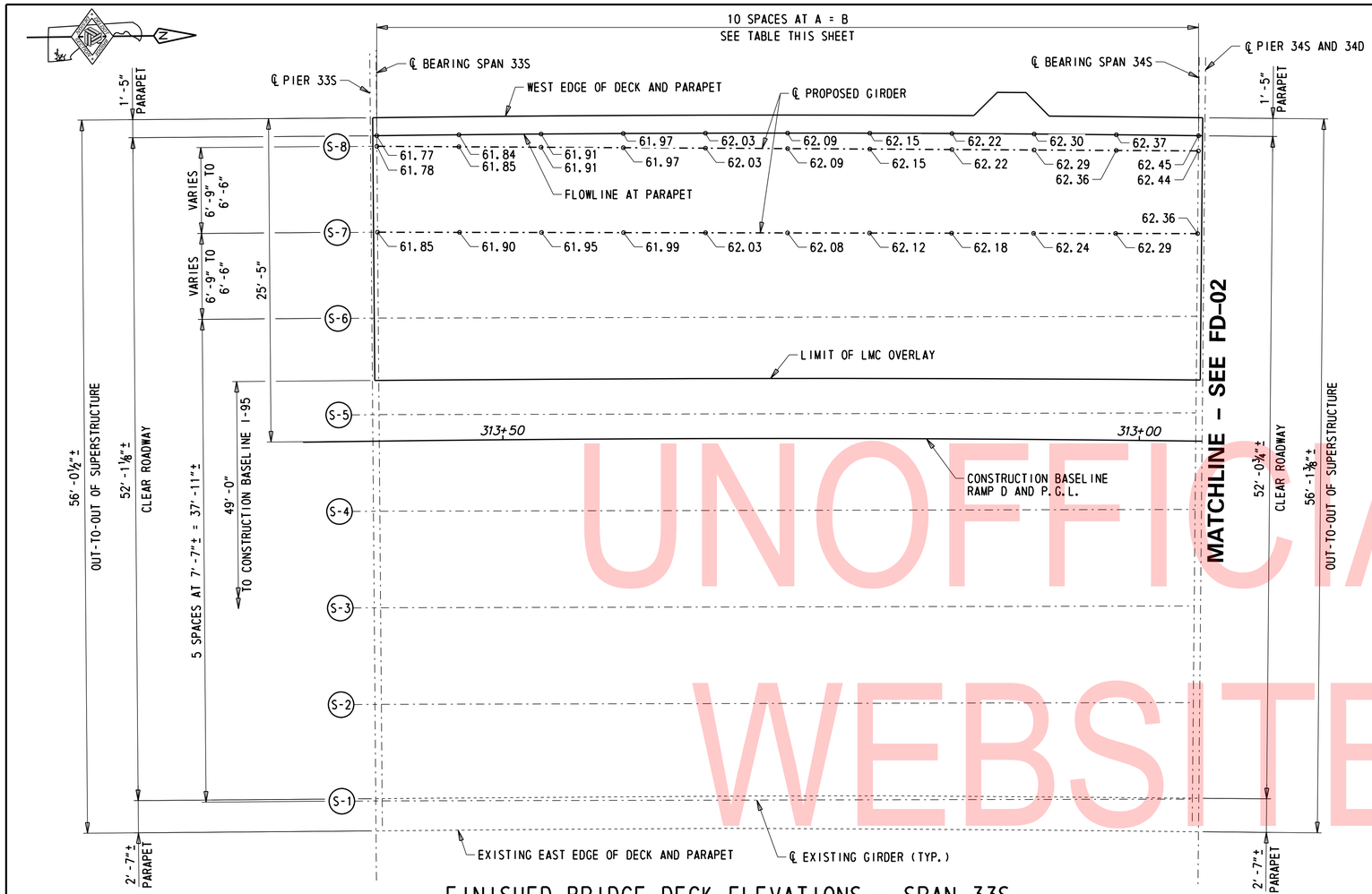

FINISHED BRIDGE DECK ELEVATIONS - SPAN 33S

⅜" = 1'-0"

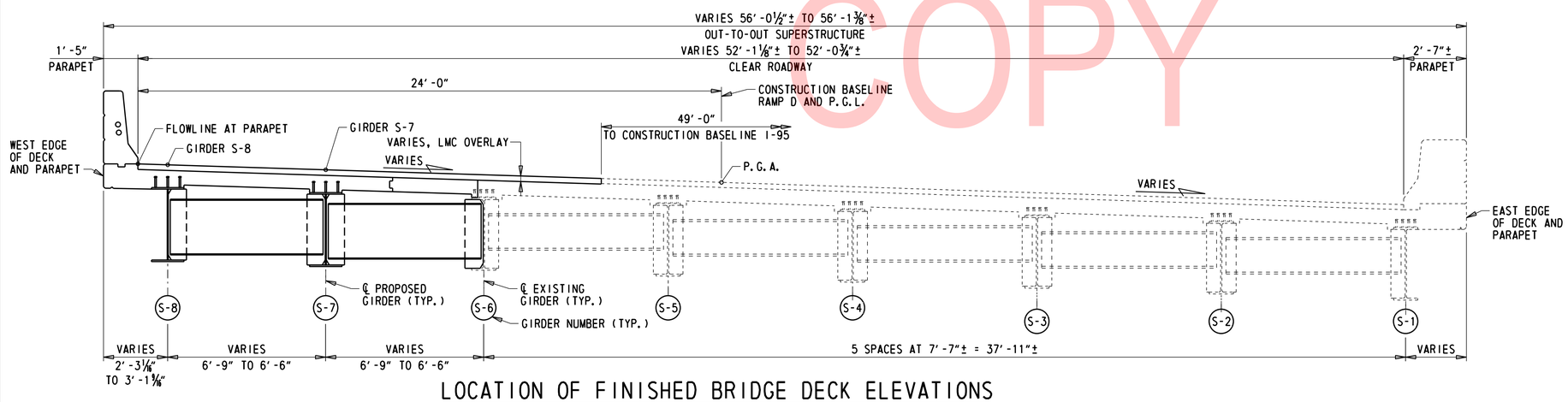

LOCATION OF FINISHED BRIDGE DECK ELEVATIONS

⅜" = 1'-0"

CROSS SLOPE TRANSITIONS			
STATION	LEFT SHOULDER	TRAVEL LANES	RIGHT SHOULDER
303+98.00	-2.00%	+2.00%	+2.00%
305+48.00	-2.00%	+2.00%	+2.00%
306+23.00	-5.60%	+5.60%	+5.60%
308+64.12	-5.60%	+5.60%	+5.60%
308+74.99	-4.83%	+5.09%	+5.09%
309+19.12	-	+3.00%	+3.00%
310+92.68	-	+3.00%	+3.00%
311+32.68	-	+4.30%	+4.30%
312+07.75	-	+4.30%	+4.30%
313+59.91	-	+0.88%	-0.97%

DECK ELEVATION SPACING TABLE		
LINE	A	B
FLOW LINE AT PARAPET	6'-5½"	64'-6¾"
GIRDER S-8	6'-5 7/16"	64'-6½"
GIRDER S-7	6'-5 5/16"	64'-5⅛"
GIRDER S-6	6'-5⅛"	64'-3¾"
GIRDER S-5	6'-5"	64'-2 1/16"
CONSTRUCTION BASELINE RAMP D	6'-5"	64'-1¾"
GIRDER S-4	6'-4⅞"	64'-0⅝"
GIRDER S-3	6'-4 11/16"	63'-11 1/16"
GIRDER S-2	6'-4 9/16"	63'-9 7/16"
GIRDER S-1	6'-4⅜"	63'-7⅞"
FLOW LINE AT PARAPET	6'-4⅜"	63'-7⅝"

NOTES:

1. FINISHED BRIDGE DECK ELEVATIONS SHOWN ARE TOP OF ROADWAY (TOP OF LMC OVERLAY).
2. FOR VERTICAL CURVE DATA, SEE DWG. PE-01.
3. FOR CROSS SLOPE TRANSITIONS, SEE TABLE THIS SHEET.
4. FOR EXISTING GIRDERS S-1 THROUGH S-6, MATCH EXISTING DECK ELEVATION.

UNOFFICIAL WEBSITE COPY

N:\31987-004\Contract_Ramp_D\CADD\Bridge\BR1-748S_FD01.dgn
8/23/2019 4:31:38 PM

ADDENDA / REVISIONS	SCALE AS NOTED	REHABILITATION OF I-95, 2ND STREET ON-RAMP IMPROVEMENTS	CONTRACT T201907402	BRIDGE NO. 1 748S 059	FINISHED BRIDGE DECK ELEVATIONS SPAN 33S	FD-01
			COUNTY NEW CASTLE	DESIGNED BY: D. NIZAMOFF		SECTION WRA
				CHECKED BY: W. GESCHREI		SHEET NO. 116

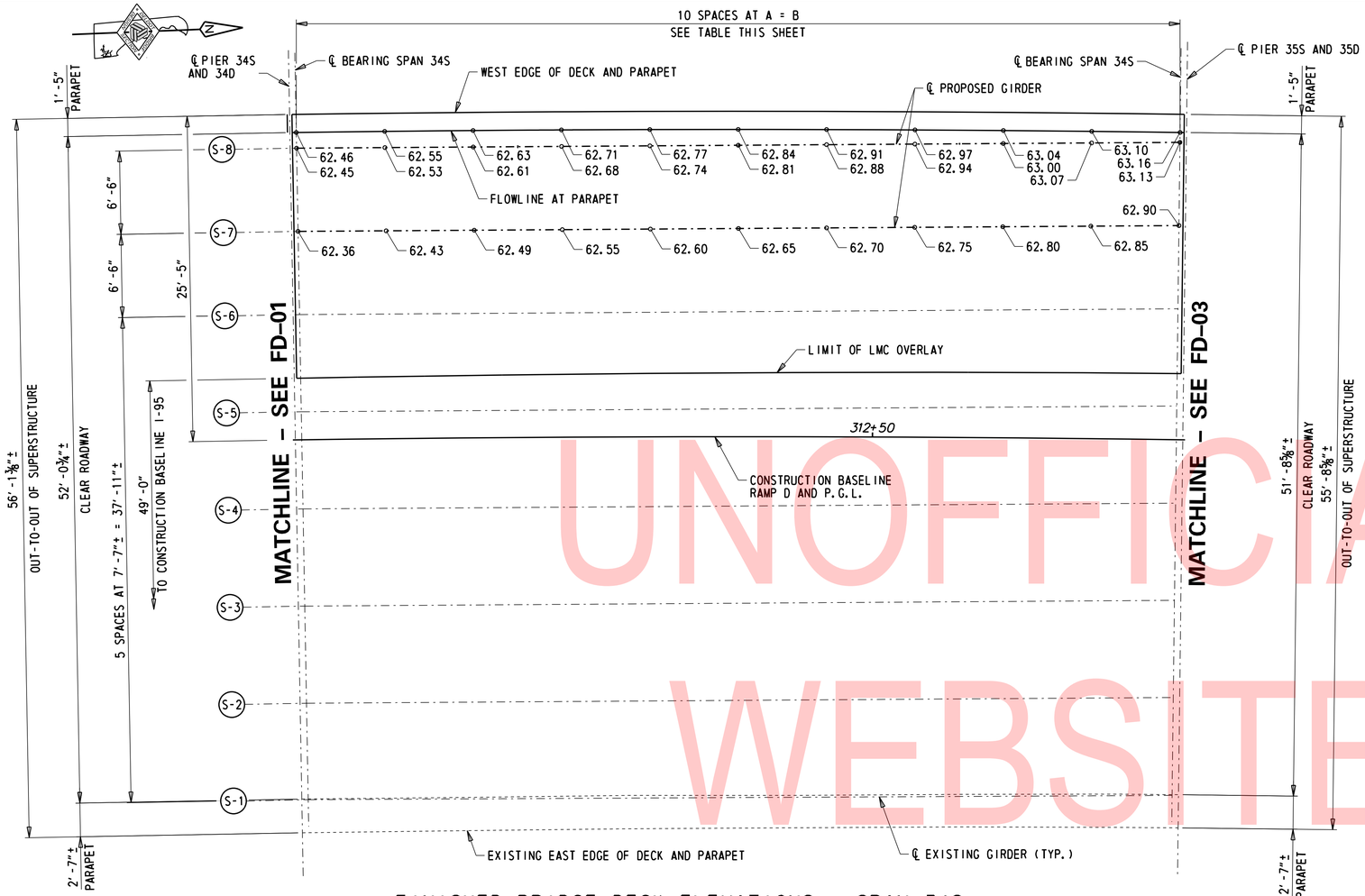

FINISHED BRIDGE DECK ELEVATIONS - SPAN 34S

1/16" = 1'-0"

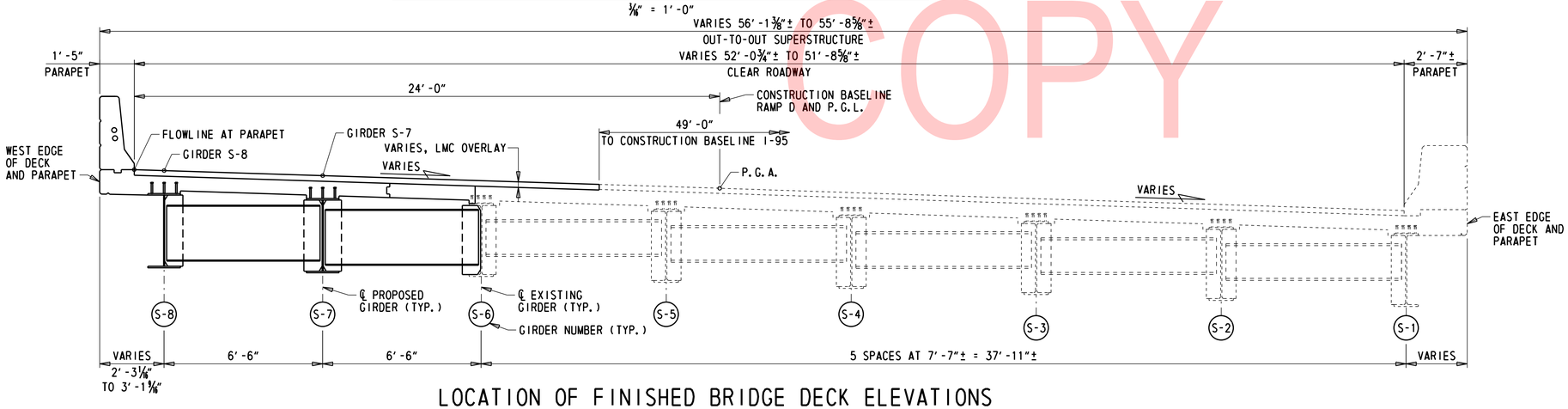

LOCATION OF FINISHED BRIDGE DECK ELEVATIONS

3/8" = 1'-0"

DECK ELEVATION SPACING TABLE		
LINE	A	B
FLOW LINE AT PARAPET	6'-10 15/16"	69'-0 1/16"
GIRDER S-8	6'-10 15/16"	68'-11 15/16"
GIRDER S-7	6'-10 9/16"	68'-9 1/2"
GIRDER S-6	6'-10 3/16"	68'-7 1/8"
GIRDER S-5	6'-10 1/16"	68'-4 1/16"
CONSTRUCTION BASELINE RAMP D	6'-9 15/16"	68'-3 3/16"
GIRDER S-4	6'-9 3/4"	68'-1 11/16"
GIRDER S-3	6'-9 1/2"	67'-11"
GIRDER S-2	6'-9 1/4"	67'-8 1/4"
GIRDER S-1	6'-8 15/16"	67'-5 1/2"
FLOW LINE AT PARAPET	6'-8 15/16"	67'-5 1/8"

NOTES:

1. FINISHED BRIDGE DECK ELEVATIONS SHOWN ARE TOP OF ROADWAY (TOP OF LMC OVERLAY).
2. FOR VERTICAL CURVE DATA, SEE DWG. PE-01.
3. FOR CROSS SLOPE TRANSITIONS, SEE TABLE DWG. FD-01.
4. FOR EXISTING GIRDERS S-1 THROUGH S-6, MATCH EXISTING DECK ELEVATION.

UNOFFICIAL WEBSITE COPY

ADDENDA / REVISIONS	SCALE AS NOTED	REHABILITATION OF I-95, 2ND STREET ON-RAMP IMPROVEMENTS	CONTRACT T201907402	BRIDGE NO. 1 748S 059	FINISHED BRIDGE DECK ELEVATIONS SPAN 34S	FD-02
			COUNTY NEW CASTLE	DESIGNED BY: D. NIZAMOFF		SECTION WRA
				CHECKED BY: W. GESCHREI		SHEET NO. 117

N:\31987-004\Contract_Ramp_D\CADD\Bridge\BR1-748S_FD02.dgn
8/23/2019 4:31:39 PM

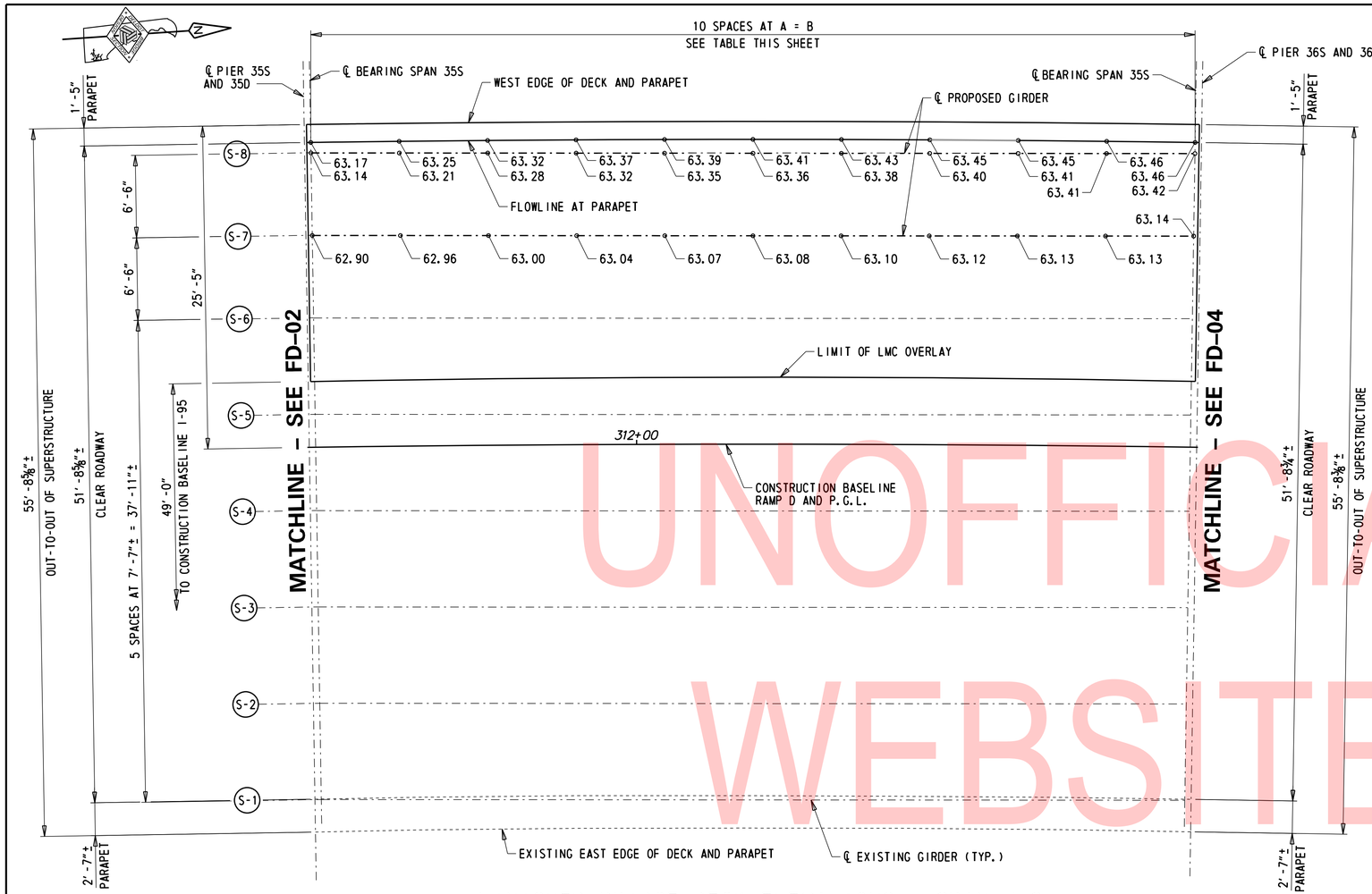

FINISHED BRIDGE DECK ELEVATIONS - SPAN 35S

1/16" = 1'-0"

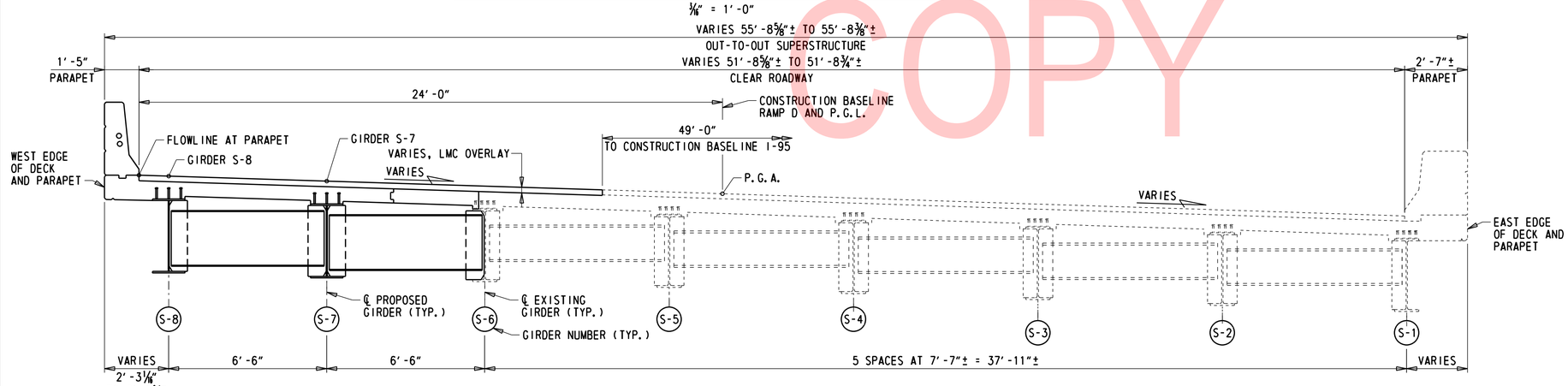

LOCATION OF FINISHED BRIDGE DECK ELEVATIONS

3/8" = 1'-0"

DECK ELEVATION SPACING TABLE		
LINE	A	B
FLOW LINE AT PARAPET	6'-11 9/16"	69'-7 3/8"
GIRDER S-8	6'-11 1/2"	69'-7 1/16"
GIRDER S-7	6'-11 1/4"	69'-4 9/16"
GIRDER S-6	6'-11"	69'-1 15/16"
GIRDER S-5	6'-10 3/4"	68'-11 1/4"
CONSTRUCTION BASELINE RAMP D	6'-10 5/8"	68'-10 1/4"
GIRDER S-4	6'-10 11/16"	68'-8 3/16"
GIRDER S-3	6'-10 7/8"	68'-5 1/16"
GIRDER S-2	6'-9 7/16"	68'-2 1/2"
GIRDER S-1	6'-9 3/16"	67'-11 11/16"
FLOW LINE AT PARAPET	6'-9 1/2"	67'-11 1/4"

NOTES:

1. FINISHED BRIDGE DECK ELEVATIONS SHOWN ARE TOP OF ROADWAY (TOP OF LMC OVERLAY).
2. FOR VERTICAL CURVE DATA, SEE DWG. PE-01.
3. FOR CROSS SLOPE TRANSITIONS, SEE TABLE DWG. FD-01.
4. FOR EXISTING GIRDERS S-1 THROUGH S-6, MATCH EXISTING DECK ELEVATIONS.

UNOFFICIAL WEBSITE COPY

N:\31987-004\Contract_Ramp_D\CADD\Bridge\BRI-748S_FD03.dgn
8/23/2019 4:31:39 PM

ADDENDA / REVISIONS	SCALE AS NOTED	REHABILITATION OF I-95, 2ND STREET ON-RAMP IMPROVEMENTS	CONTRACT T201907402	BRIDGE NO. 1 748S 059	FINISHED BRIDGE DECK ELEVATIONS SPAN 35S	FD-03
			COUNTY NEW CASTLE	DESIGNED BY: D. NIZAMOFF		SECTION WRA
				CHECKED BY: W. GESCHREI		SHEET NO. 118

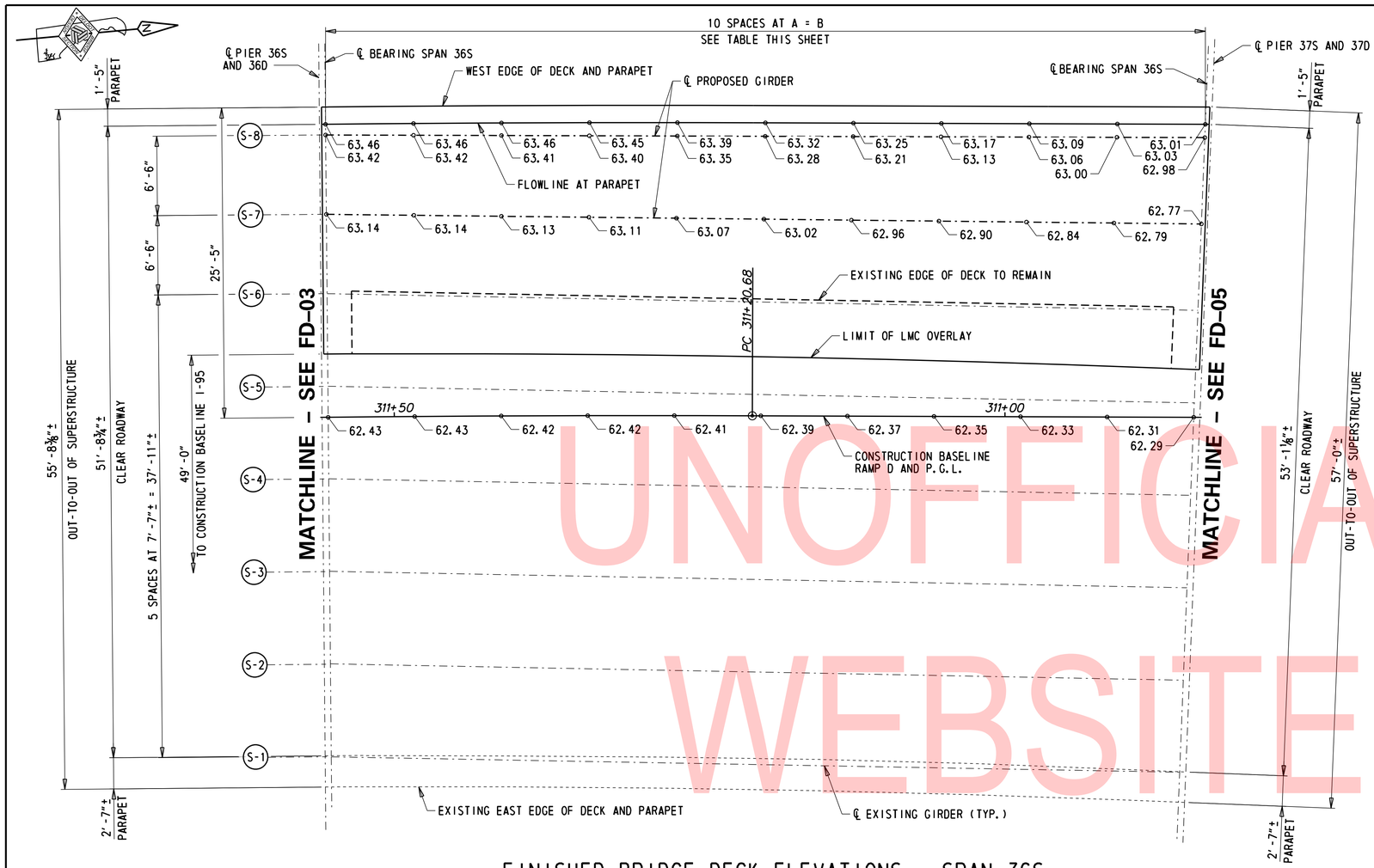

FINISHED BRIDGE DECK ELEVATIONS - SPAN 36S

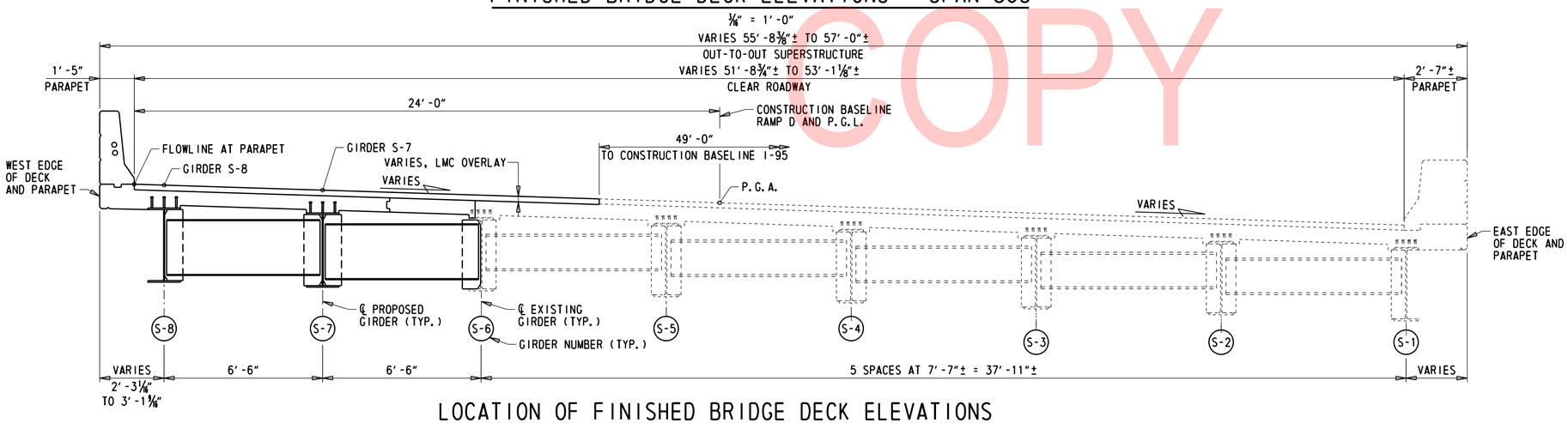

LOCATION OF FINISHED BRIDGE DECK ELEVATIONS

3/8" = 1'-0"

DECK ELEVATION SPACING TABLE		
LINE	A	B
FLOW LINE AT PARAPET	7'-2 1/16"	72'-0 1/2"
GIRDER S-8	7'-2 3/8"	71'-11 7/8"
GIRDER S-7	7'-2"	71'-7 7/8"
GIRDER S-6	7'-1 9/16"	71'-3 7/8"
GIRDER S-5	7'-1 1/8"	70'-11 1/16"
CONSTRUCTION BASELINE RAMP D	7'-1 1/16"	70'-10 7/16"
GIRDER S-4	7'-0 11/16"	70'-7 1/16"
GIRDER S-3	7'-0 1/4"	70'-2 9/16"
GIRDER S-2	6'-11 11/16"	69'-10 1/16"
GIRDER S-1	6'-11 3/8"	69'-5 3/4"
FLOW LINE AT PARAPET	6'-11 3/16"	69'-4 11/16"

NOTES:

1. FINISHED BRIDGE DECK ELEVATIONS SHOWN ARE TOP OF ROADWAY (TOP OF LMC OVERLAY).
2. FOR VERTICAL CURVE DATA, SEE DWG. PE-01.
3. FOR CROSS SLOPE TRANSITIONS, SEE TABLE DWG. FD-01.
4. FOR EXISTING GIRDERS S-1 THROUGH S-6, MATCH EXISTING DECK ELEVATIONS.

UNOFFICIAL WEBSITE COPY

ADDENDA / REVISIONS	SCALE AS NOTED	REHABILITATION OF I-95, 2ND STREET ON-RAMP IMPROVEMENTS	CONTRACT T201907402	BRIDGE NO. 1 748S 059	FINISHED BRIDGE DECK ELEVATIONS SPAN 36S	FD-04
			COUNTY NEW CASTLE	DESIGNED BY: D. NIZAMOFF		SECTION WRA
				CHECKED BY: W. GESCHREI		SHEET NO. 119

N:\31987-004\Contract_Ramp_D\CADD\Bridge\BR1-748S_FD04.dgn
8/23/2019 4:31:40 PM

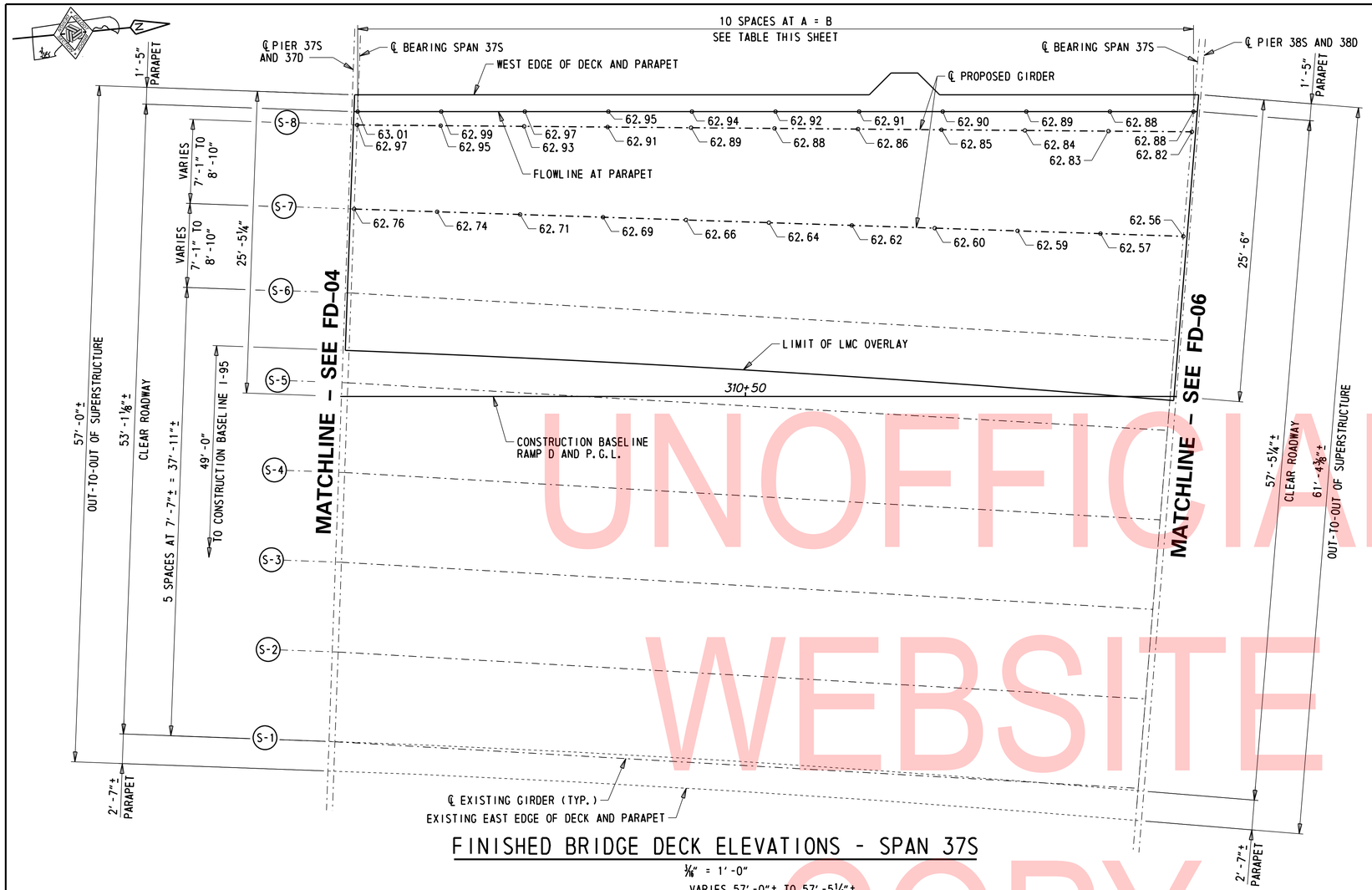

FINISHED BRIDGE DECK ELEVATIONS - SPAN 37S

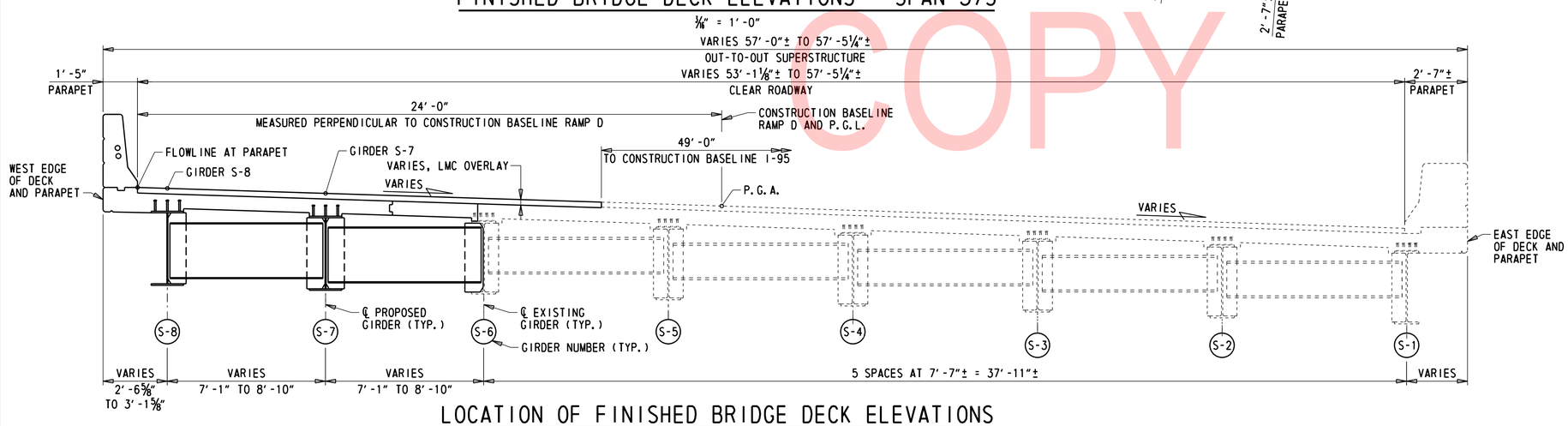

LOCATION OF FINISHED BRIDGE DECK ELEVATIONS

3/8" = 1'-0"

DECK ELEVATION SPACING TABLE		
LINE	A	B
FLOW LINE AT PARAPET	7'-0½"	70'-5⅛"
GIRDER S-8	7'-0⅜"	70'-3¾"
GIRDER S-7	6'-11⅞"	69'-10¹⁄₁₆"
GIRDER S-6	6'-11⅞"	69'-6¾"
GIRDER S-5	6'-11"	69'-2¼"
CONSTRUCTION BASELINE RAMP D	6'-11¹⁄₁₆"	69'-3⁵⁄₁₆"
GIRDER S-4	6'-10⅝"	68'-9¹⁵⁄₁₆"
GIRDER S-3	6'-10¹⁄₁₆"	68'-5¹⁄₁₆"
GIRDER S-2	6'-9¾"	68'-1⅛"
GIRDER S-1	6'-9⅜"	67'-9⅝"
FLOW LINE AT PARAPET	6'-9⅛"	67'-8¹⁵⁄₁₆"

NOTES:

1. FINISHED BRIDGE DECK ELEVATIONS SHOWN ARE TOP OF ROADWAY (TOP OF LMC OVERLAY).
2. FOR VERTICAL CURVE DATA, SEE DWG. PE-01.
3. FOR CROSS SLOPE TRANSITIONS, SEE TABLE DWG. FD-01.
4. FOR EXISTING GIRDERS S-1 THROUGH S-6, MATCH EXISTING DECK ELEVATIONS.

UNOFFICIAL WEBSITE COPY

ADDENDA / REVISIONS

SCALE AS NOTED

REHABILITATION OF I-95, 2ND STREET ON-RAMP IMPROVEMENTS

CONTRACT	BRIDGE NO.	1 748S 059
T201907402	DESIGNED BY: D. NIZAMOFF	
COUNTY		
NEW CASTLE	CHECKED BY: W. GESCHREI	

FINISHED BRIDGE DECK ELEVATIONS SPAN 37S

FD-05

SECTION: WRA

SHEET NO. 120

N:\31987-004\Contract_Ramp_D\CADD\Bridge\BR1-748S_FD05.dgn
8/23/2019 4:39:41 PM

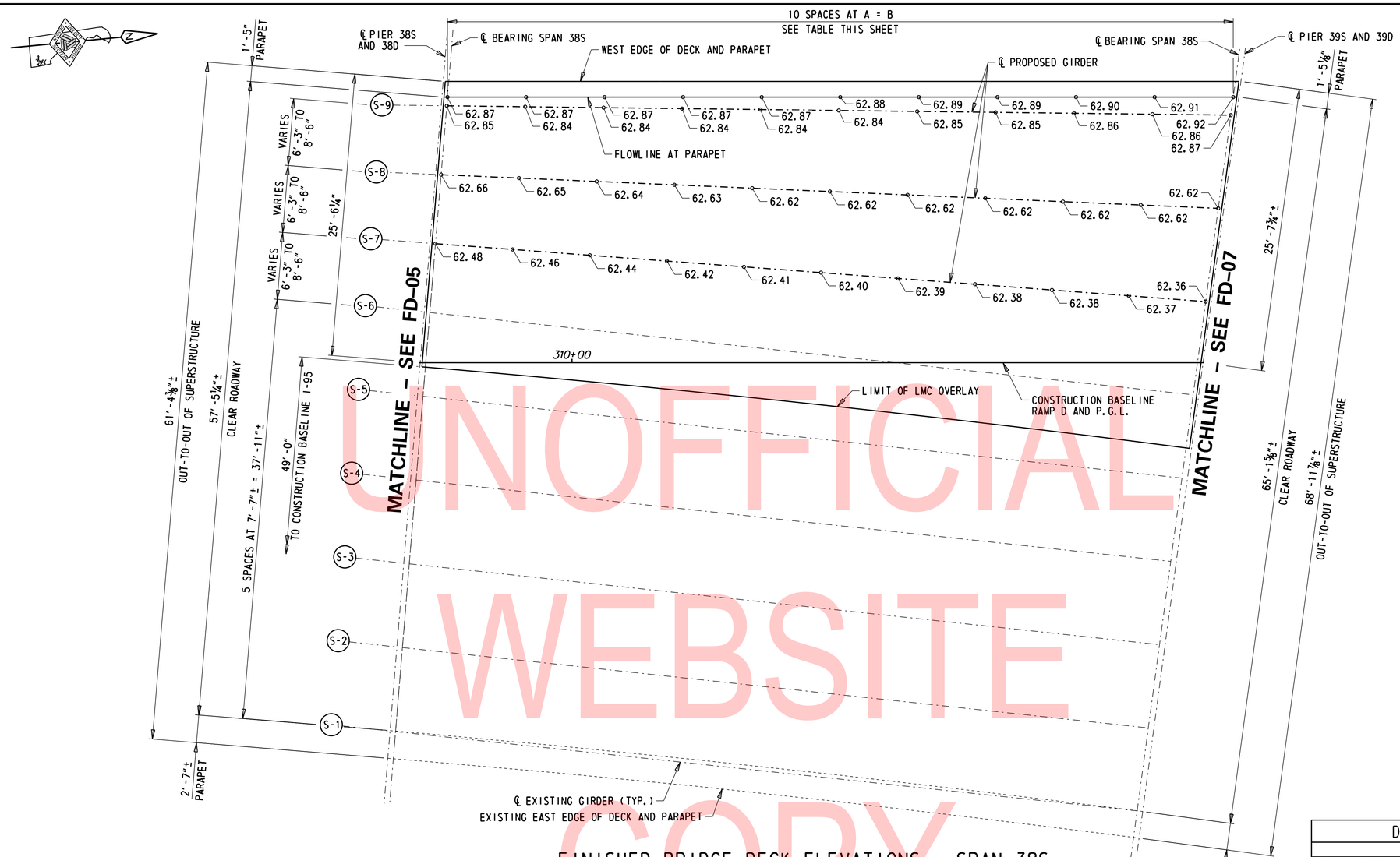

FINISHED BRIDGE DECK ELEVATIONS - SPAN 38S

1/16" = 1'-0"

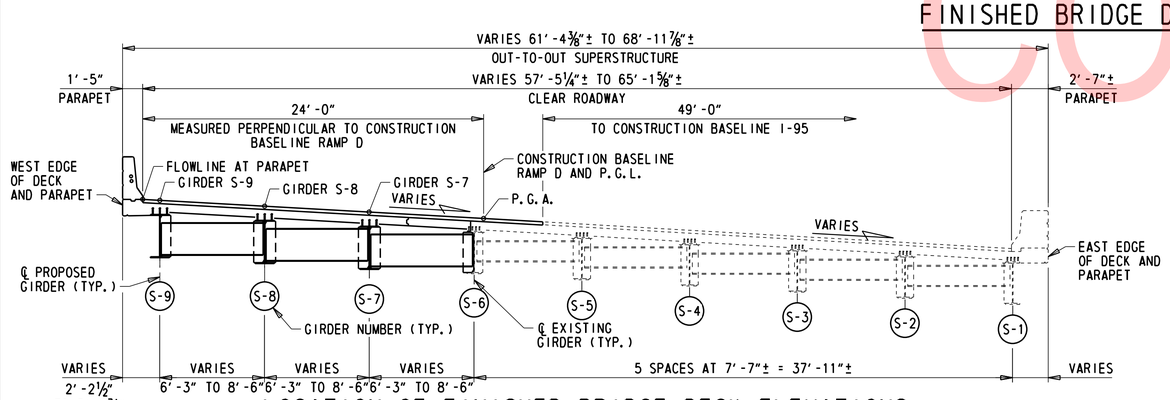

LOCATION OF FINISHED BRIDGE DECK ELEVATIONS

1/16" = 1'-0"

DECK ELEVATION SPACING TABLE		
LINE	A	B
FLOW LINE AT PARAPET	7'-1 1/16"	70'-11 5/8"
GIRDER S-9	7'-1"	70'-9 11/16"
GIRDER S-8	7'-0 3/16"	70'-3 1/16"
GIRDER S-7	6'-11 11/16"	69'-9 7/16"
GIRDER S-6	6'-11 3/16"	69'-4 1/16"
CONSTRUCTION BASELINE RAMP D	6'-11 5/8"	69'-8 1/16"
GIRDER S-5	6'-10 3/4"	68'-11 15/16"
GIRDER S-4	6'-10 1/4"	68'-6 9/16"
GIRDER S-3	6'-9 15/16"	68'-1 11/16"
GIRDER S-2	6'-9 3/16"	67'-9 1/16"
GIRDER S-1	6'-8 11/16"	67'-4 3/8"
FLOW LINE AT PARAPET	6'-8 3/4"	67'-3 3/4"

NOTES:

1. FINISHED BRIDGE DECK ELEVATIONS SHOWN ARE TOP OF ROADWAY (TOP OF LMC OVERLAY).
2. FOR VERTICAL CURVE DATA, SEE DWG. PE-01.
3. FOR CROSS SLOPE TRANSITIONS, SEE TABLE DWG. FD-01.
4. FOR EXISTING GIRDERS S-1 THROUGH S-6, MATCH EXISTING DECK ELEVATIONS.

UNOFFICIAL WEBSITE COPY

N:\31987-004\Contract_Ramp_D\CADD\Bridge\BR1-748S_FD06.dgn
8/23/2019 4:31:43 PM

ADDENDA / REVISIONS	SCALE AS NOTED	REHABILITATION OF I-95, 2ND STREET ON-RAMP IMPROVEMENTS	CONTRACT T201907402	BRIDGE NO. 1 748S 059	BRIDGE FINISHED DECK ELEVATIONS SPAN 38S	FD-06
			COUNTY NEW CASTLE	DESIGNED BY: D. NIZAMOFF		SECTION WRA
				CHECKED BY: W. GESCHREI		SHEET NO. 121

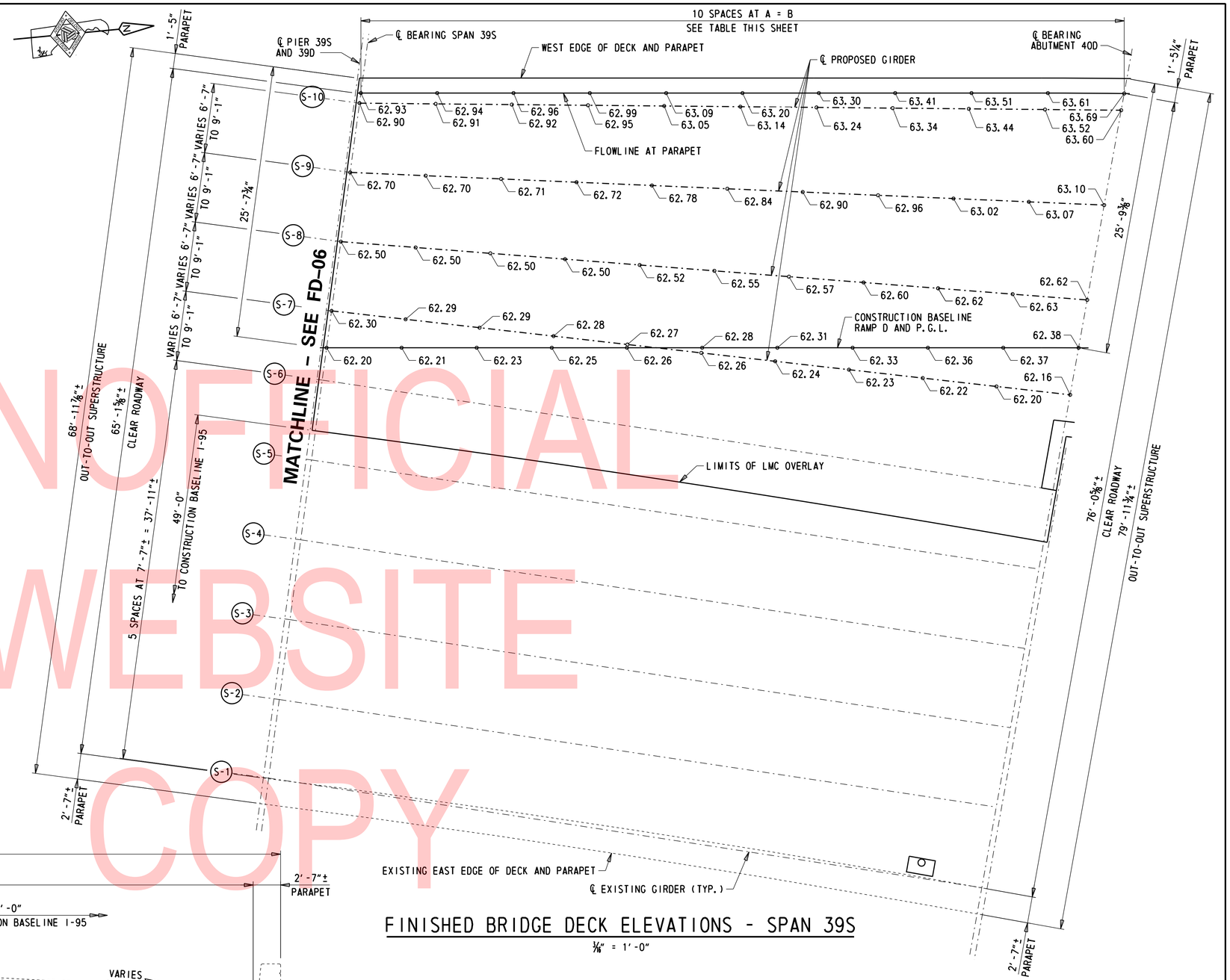

FINISHED BRIDGE DECK ELEVATIONS - SPAN 39S

3/16" = 1'-0"

DECK ELEVATION SPACING TABLE		
LINE	A	B
FLOW LINE AT PARAPET	7'-2 5/16"	71'-10 15/16"
GIRDER S-10	7'-2 1/8"	71'-9 3/16"
GIRDER S-9	7'-1 5/16"	71'-1 1/4"
GIRDER S-8	7'-0 5/8"	70'-6 3/16"
GIRDER S-7	7'-0 1/16"	70'-0 7/16"
CONSTRUCTION BASELINE RAMP D	7'-1"	70'-10 1/4"
GIRDER S-6	6'-11 9/16"	69'-7 5/16"
GIRDER S-5	6'-11 3/16"	69'-3 5/8"
GIRDER S-4	6'-10 3/4"	68'-11 11/16"
GIRDER S-3	6'-10 3/8"	68'-7 11/16"
GIRDER S-2	6'-10"	68'-3 11/16"
GIRDER S-1	6'-9 9/16"	67'-11 3/4"
FLOW LINE AT PARAPET	6'-9 1/2"	67'-11 1/4"

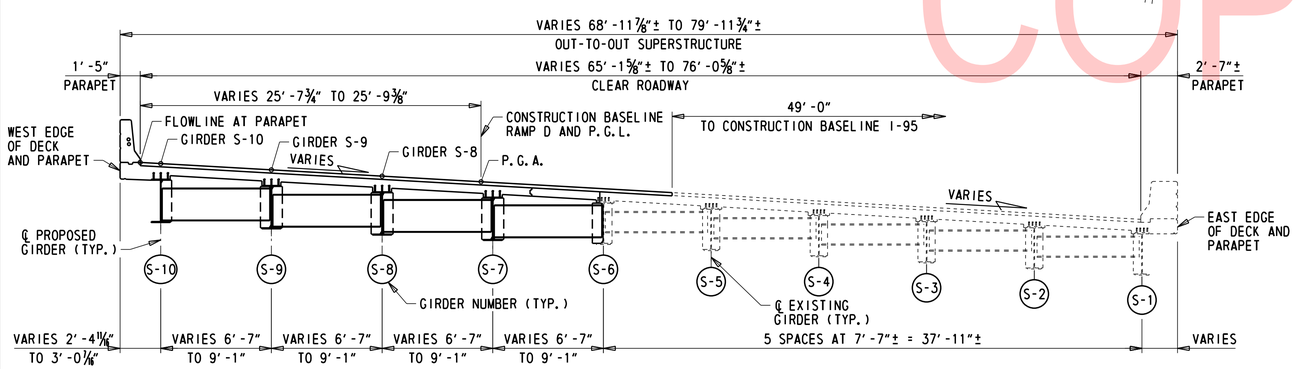

LOCATION OF FINISHED BRIDGE DECK ELEVATIONS

3/16" = 1'-0"

NOTES:

1. FINISHED BRIDGE DECK ELEVATIONS SHOWN ARE TOP OF ROADWAY (TOP OF LMC OVERLAY).
2. FOR VERTICAL CURVE DATA, SEE DWG. PE-01.
3. FOR CROSS SLOPE TRANSITIONS, SEE TABLE DWG. FD-01.
4. FOR EXISTING GIRDERS S-1 THROUGH S-6, MATCH EXISTING DECK ELEVATIONS.

UNOFFICIAL WEBSITE COPY

ADDENDA / REVISIONS	

SCALE AS NOTED

REHABILITATION OF I-95, 2ND STREET ON-RAMP IMPROVEMENTS

CONTRACT	BRIDGE NO.	1 748S 059
T201907402	DESIGNED BY: D. NIZAMOFF	
COUNTY		
NEW CASTLE	CHECKED BY: W. GESCHREI	

BRIDGE FINISHED DECK ELEVATIONS SPAN 39S

FD-07
SECTION
WRA
SHEET NO.
122

N:\31987-004\Contract_Ramp_D\CADD\Bridge\BR-1-748S_FD07.dgn
8/23/2019 4:31:48 PM

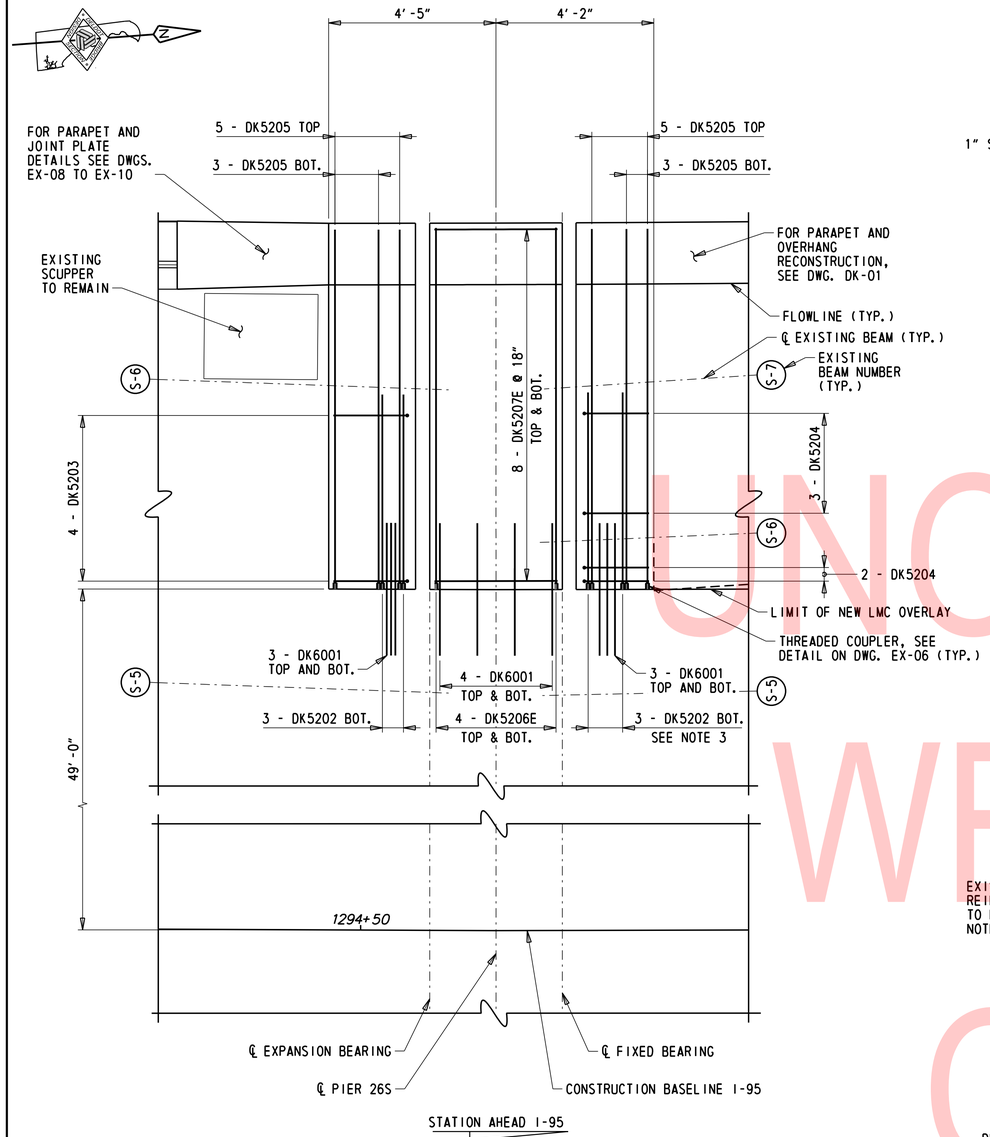

PLAN - PIER 26S

½" = 1' -0"

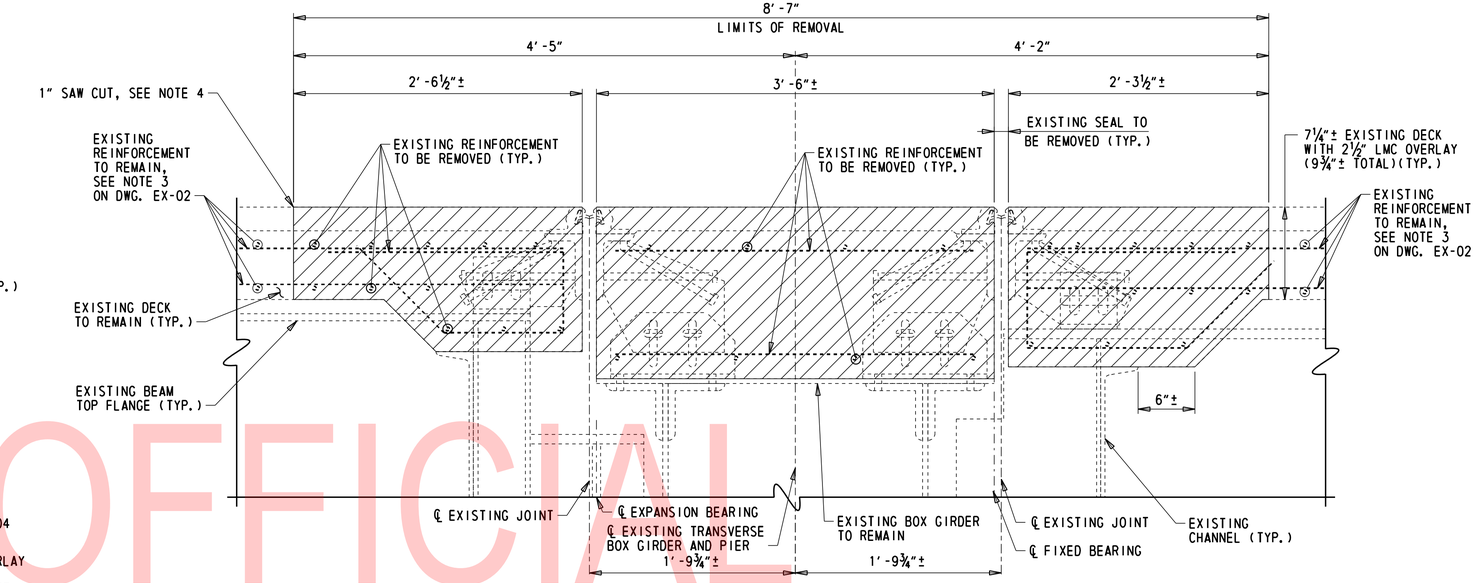

JOINT REMOVAL DETAIL - PIER 26S

1½" = 1' -0"

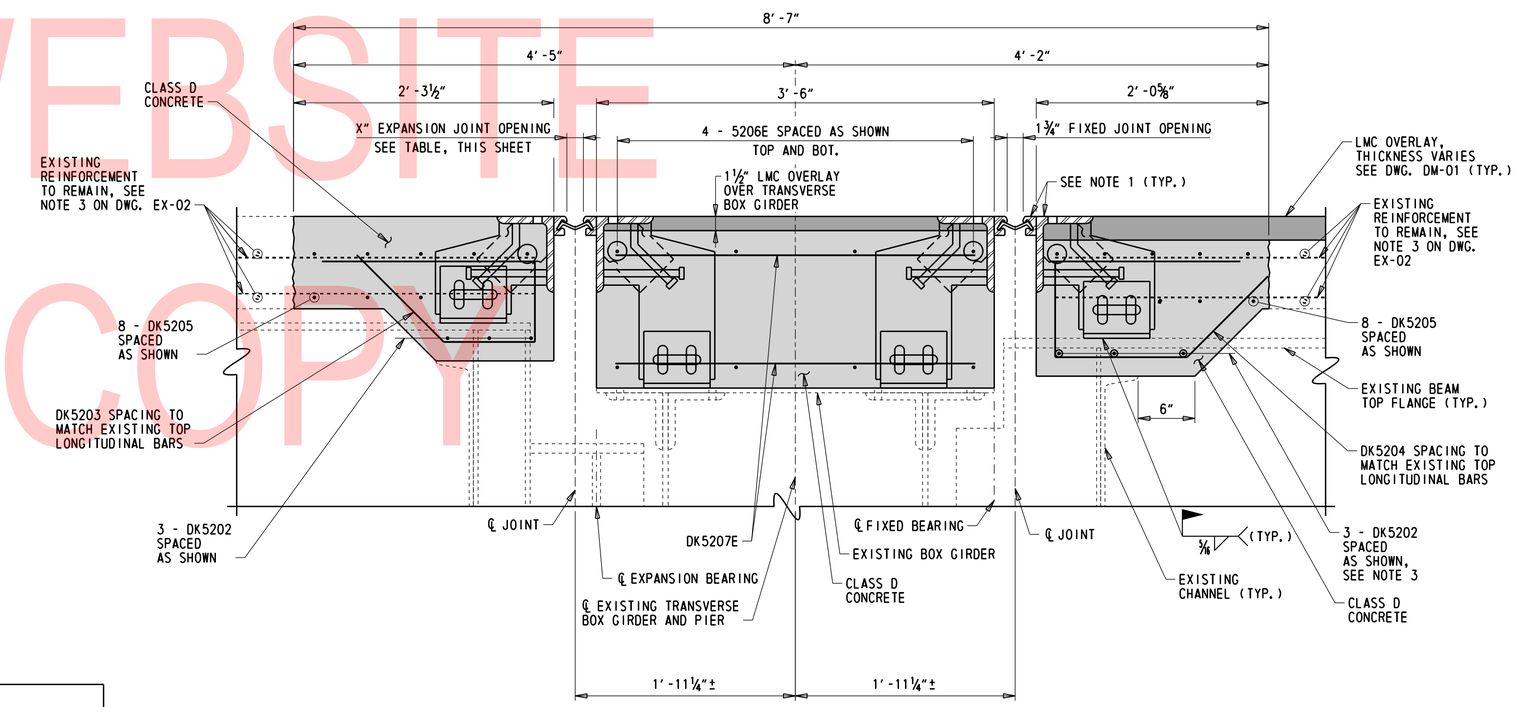

JOINT DETAIL - PIER 26S

1½" = 1' -0"

NOTES:

1. FOR JOINT ASSEMBLY AND STEEL EXTRUSION DETAILS AND STRIP SEAL EXPANSION NOTES, SEE DWG. EX-07.
2. FOR JOINT RECONSTRUCTION NOTES, SEE DWG. EX-02.
3. DRILL ¾" DIA. HOLE IN BEAM WEB OF BEAM S-6 IN SPAN 26S IN ORDER TO PASS DK5202 BARS THROUGH WEB. COST SHALL BE INCIDENTAL TO ITEM 624000 - PREFABRICATED EXPANSION JOINT SYSTEM, 3".
4. PAYMENT FOR 1" SAW CUT SHALL BE INCIDENTAL TO ITEM 624000 - PREFABRICATED EXPANSION JOINT SYSTEM, 3".

LEGEND:

- REMOVAL LIMITS
- CLASS D CONCRETE
- LMC OVERLAY

DECK JOINT OPENINGS, X

LOCATION		TEMPERATURE (°F)									MOVEMENT CLASSIFICATION
		20°	30°	40°	50°	60°	68°	70°	80°	90°	100°	
PIER 26S	EXPANSION	2"	1 15/16"	1 7/8"	1 11/16"	1 3/4"	1 11/16"	1 11/16"	1 5/8"	1 9/16"	1½"	3"

ADDENDA / REVISIONS

SCALE AS NOTED

REHABILITATION OF I-95, 2ND STREET ON-RAMP IMPROVEMENTS

CONTRACT	BRIDGE NO.	1 748S 059
T201907402	DESIGNED BY: D. NIZAMOFF	
COUNTY		
NEW CASTLE	CHECKED BY: W. GESCHREI	

EXPANSION JOINT DETAILS PIER 26S

EX-01

SECTION WRA

SHEET NO. 123

N:\31987-004\Contract_Ramp_D\CADD\Bridge\BR1-748S_EX01.dgn
8/23/2019 4:31:49 PM

UNOFFICIAL WEBSITE COPY

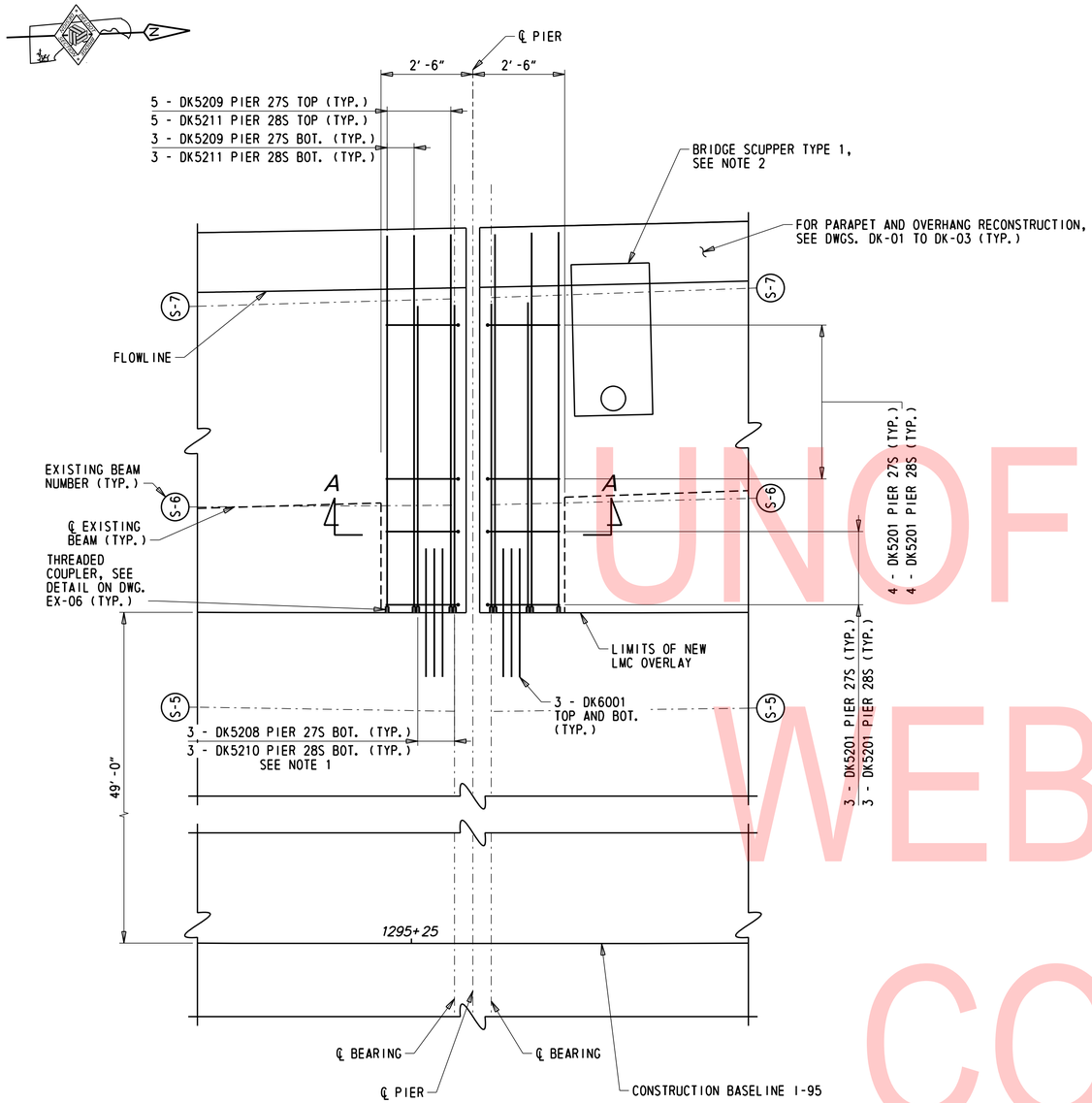

PLAN - PIERS 27S & 28S

½" = 1'-0"

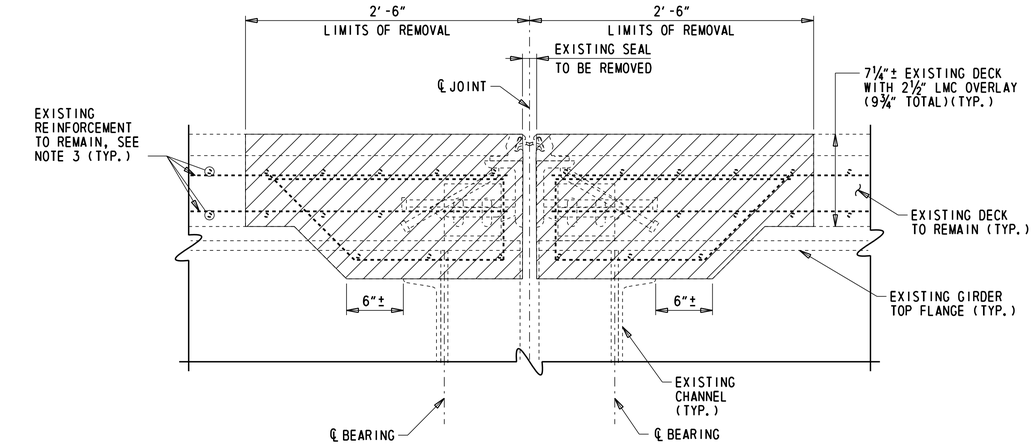

SECTION A-A REMOVAL

1½" = 1'-0"

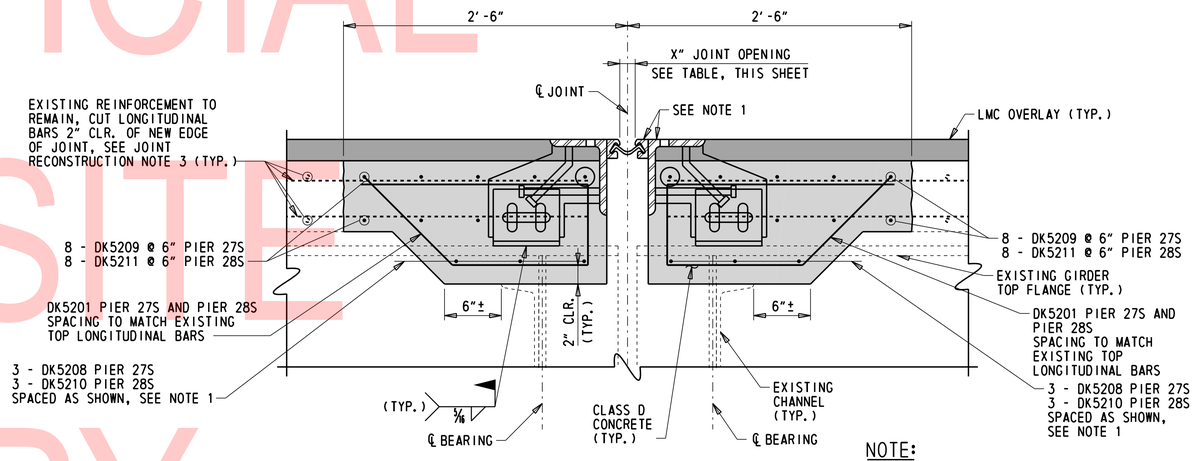

SECTION A-A RECONSTRUCTION

1½" = 1'-0"

NOTE:

BAR NUMBERS WILL VARY FOR PIERS 29S THROUGH 39S. SEE APPLICABLE PLAN VIEW ON DWG. EX-03 TO EX-06.

NOTES:

1. AT PIERS 27S AND 28S, DRILL ¾" DIA. HOLE IN BEAM WEB OF BEAM S-6 IN ORDER TO PASS DK5208 AND DK5210 BARS THROUGH WEB. COST SHALL BE INCIDENTAL TO ITEM 624000 - PREFABRICATED EXPANSION JOINT SYSTEM, 3".
2. IF REINFORCEMENT INTERFERES WITH SCUPPER PLACEMENT, ADJUST BAR PLACEMENT ACCORDINGLY.

LEGEND:

- REMOVAL LIMITS
- CLASS D CONCRETE
- LMC OVERLAY

DECK JOINT OPENINGS, X

LOCATION	TEMPERATURE (°F)										MOVEMENT CLASSIFICATION
	20°	30°	40°	50°	60°	68°	70°	80°	90°	100°	
PIER 27S	1 15/16"	1 15/16"	1 7/8"	1 13/16"	1 3/4"	1 11/16"	1 11/16"	1 5/8"	1 9/16"	1 9/16"	3"
PIER 28S	2 1/16"	2 1/16"	2"	1 7/8"	1 3/4"	1 7/16"	1 5/8"	1 1/2"	1 7/16"	1 7/16"	3"
PIER 29S	1 3/4"	1 3/4"	1 3/4"	1 3/4"	1 3/4"	1 3/4"	1 3/4"	1 3/4"	1 3/4"	1 3/4"	3"
PIER 30S	2 1/16"	2 1/16"	2"	1 7/8"	1 3/4"	1 11/16"	1 5/8"	1 1/2"	1 1/16"	1 1/16"	3"
PIER 31S	1 3/4"	1 3/4"	1 3/4"	1 3/4"	1 3/4"	1 3/4"	1 3/4"	1 3/4"	1 3/4"	1 3/4"	3"
PIER 32S	2 3/8"	2 1/4"	2 1/16"	1 15/16"	1 3/4"	1 5/8"	1 9/16"	1 7/16"	1 1/4"	1 1/8"	3"
PIER 33S	1 3/4"	1 3/4"	1 3/4"	1 3/4"	1 3/4"	1 3/4"	1 3/4"	1 3/4"	1 3/4"	1 3/4"	3"
PIER 34S	1 15/16"	1 7/8"	1 7/8"	1 13/16"	1 3/4"	1 11/16"	1 11/16"	1 5/8"	1 5/8"	1 9/16"	3"
PIER 35S	2 1/16"	2 1/16"	1 15/16"	1 7/8"	1 3/4"	1 11/16"	1 5/8"	1 9/16"	1 1/16"	1 1/16"	3"
PIER 36S	1 3/4"	1 3/4"	1 3/4"	1 3/4"	1 3/4"	1 3/4"	1 3/4"	1 3/4"	1 3/4"	1 3/4"	3"
PIER 37S	2 1/16"	2 1/16"	1 15/16"	1 7/8"	1 3/4"	1 11/16"	1 5/8"	1 9/16"	1 1/16"	1 1/16"	3"
PIER 38S	1 3/4"	1 3/4"	1 3/4"	1 3/4"	1 3/4"	1 3/4"	1 3/4"	1 3/4"	1 3/4"	1 3/4"	3"
PIER 39S	2 1/16"	2 1/16"	1 15/16"	1 7/8"	1 3/4"	1 11/16"	1 5/8"	1 9/16"	1 1/16"	1 1/16"	3"

JOINT RECONSTRUCTION NOTES:

1. NEW STRIP SEAL ASSEMBLY SHOWN FOR GRAPHICAL PURPOSES ONLY. DETAILS MAY VARY BY MANUFACTURER. STRIP SEAL AND ASSEMBLY SHALL BE IN ACCORDANCE WITH ITEM 624000 - PREFABRICATED EXPANSION JOINT SYSTEM, 3".
2. CLASS D CONCRETE SHALL BE IN ACCORDANCE WTIH ITEM 610017 - PORTLAND CEMENT CONCRETE MASONRY, SUPERSTRUCTURE, CLASS D. CLEAN AND APPLY EPOXY BONDING COMPOUND TO ALL REMOVAL AND ROUGHENED SURFACES PRIOR TO PLACING CONCRETE. COST FOR THIS WORK SHALL BE INCIDENTAL TO ITEM 610017.
3. EXISTING BARS TO REMAIN SHALL BE CLEANED IN ACCORDANCE WITH SUBSECTION 628.03(E)7. BARS WITH CORROSION, BROKEN, OR WITH INADEQUATE BOND SHALL BE REPAIRED IN ACCORDANCE WITH SUBSECTION 628.03(E)7. PAYMENT FOR CLEANING WILL BE INCIDENTAL TO ITEM 624000 - PREFABRICATED EXPANSION JOINT SYSTEM, 3".
4. ALL NEW REINFORCING STEEL REQUIRED TO COMPLETE THE JOINT HEADER REPAIRS SHALL HAVE 2" MIN. CONCRETE COVER UNLESS SHOWN OTHERWISE. PAYMENT FOR ALL NEW REINFORCING STEEL WILL BE MADE UNDER ITEM 611000 - BAR REINFORCEMENT.
5. THE CONTRACTOR SHALL USE CARE DURING THE REMOVAL OF THE EXISTING CONCRETE AND PORTIONS OF THE JOINT SYSTEM TO AVOID DAMAGE TO THE EXISTING PORTIONS OF THE STRUCTURE THAT ARE TO REMAIN IN PLACE. ANY DAMAGE INCURRED TO EXISTING PORTIONS OF THE STRUCTURE TO REMAIN SHALL BE REPAIRED BY THE CONTRACTOR TO THE COMPLETE SATISFACTION OF THE ENGINEER AT NO ADDITIONAL COST TO THE DEPARTMENT.
6. PRIOR TO REMOVAL OF THE EXISTING ROADWAY JOINT AND FABRICATION OF THE PROPOSED JOINT MATERIALS, THE CONTRACTOR SHALL FIELD VERIFY THE CROSS SLOPE OF THE ROADWAY AT EACH INDIVIDUAL JOINT LOCATION. AT A MINIMUM, POINTS SHALL BE TAKEN AT THE FLOWLINES AND ALL GRADE BREAKS.
7. FOR JOINT ASSEMBLY AND STEEL EXTRUSION DETAILS AND STRIP SEAL EXPANSION JOINT NOTES, SEE DWG. EX-07.
8. PARAPET JOINT PLATES ARE REQUIRED. SEE DETAILS ON DWG. EX-10.
9. WHILE JOINT HEADER/CONCRETE END DIAPHRAGM IS REMOVED, VEHICLES SHALL REMAIN A MINIMUM OF 5'-0" AWAY FROM THE JOINT OPENING/UNSUPPORTED EDGE OF DECK.

UNOFFICIAL WEBSITE COPY

ADDENDA / REVISIONS

SCALE AS NOTED

REHABILITATION OF I-95, 2ND STREET ON-RAMP IMPROVEMENTS

CONTRACT	BRIDGE NO.	1 748S 059
T201907402	DESIGNED BY: D. NIZAMOFF	
COUNTY		
NEW CASTLE	CHECKED BY: W. GESCHREI	

EXPANSION JOINT DETAILS PIERS 27S AND 28S

EX-02

SECTION	WRA
SHEET NO.	124

N:\31987-004\Contract_Ramp_D\CADD\Bridge\BR1-748S_EX02.dgn
8/23/2019 4:31:50 PM

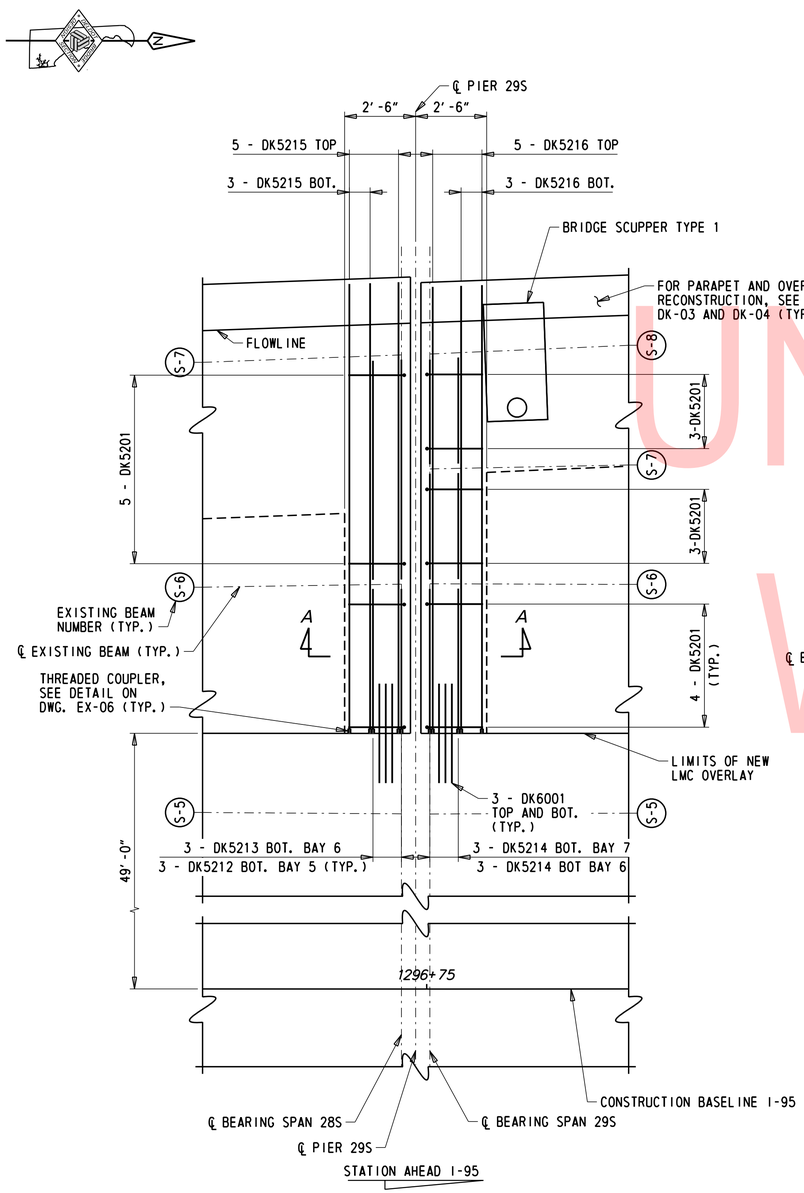

PLAN - PIER 29S

3/8" = 1'-0"

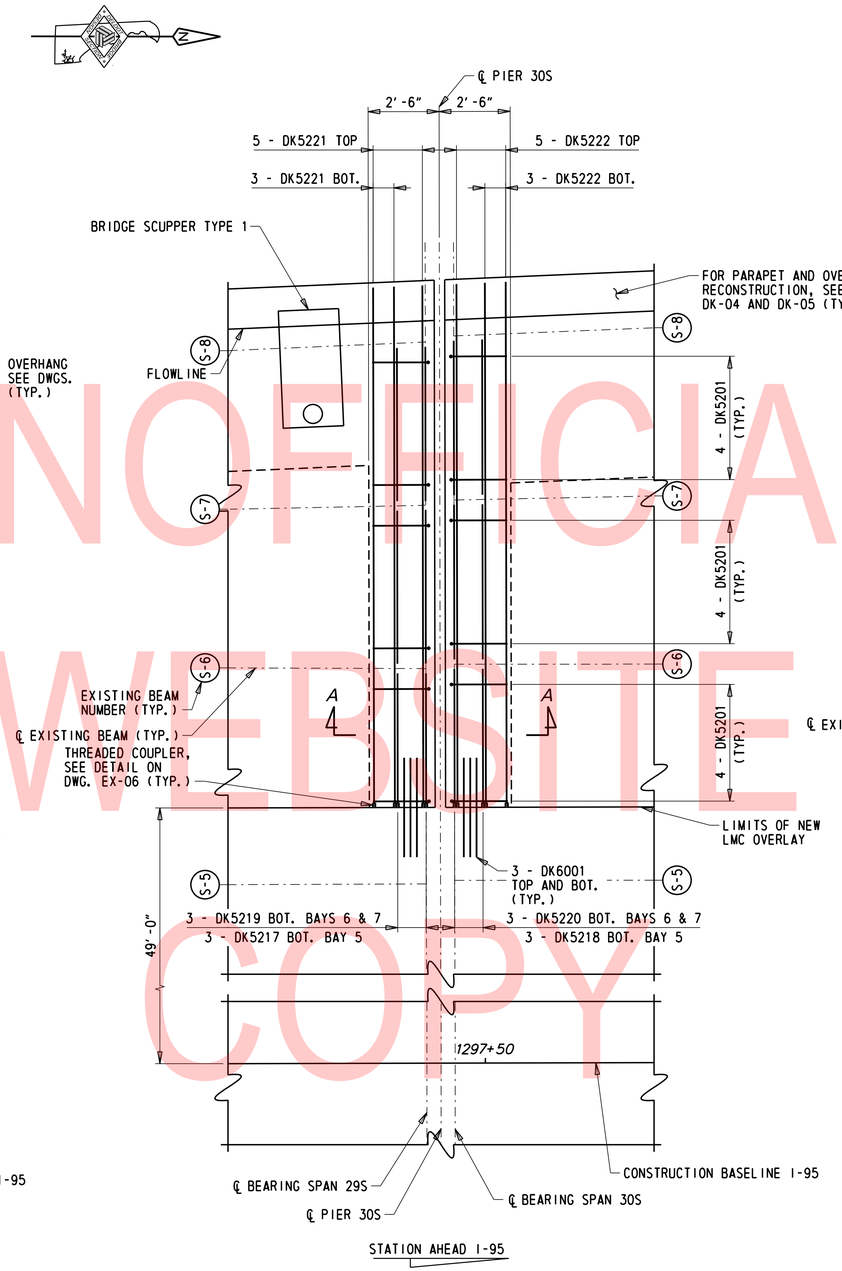

PLAN - PIER 30S

3/8" = 1'-0"

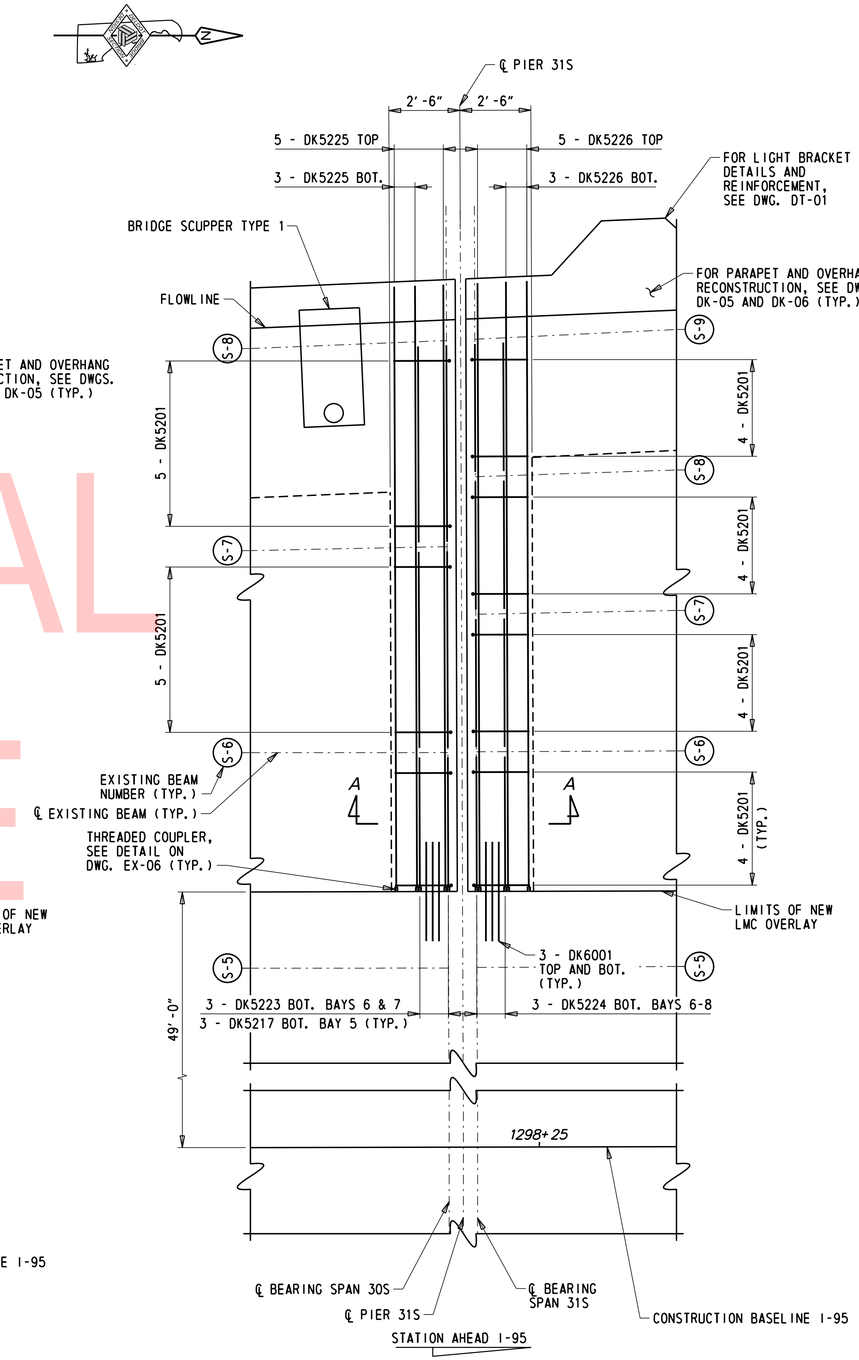

PLAN - PIER 31S

3/8" = 1'-0"

NOTES:

1. FOR SECTION A-A AND JOINT RECONSTRUCTION NOTES, SEE DWG. EX-02.

UNOFFICIAL WEBSITE COPY

ADDENDA / REVISIONS		SCALE AS NOTED	REHABILITATION OF I-95, 2ND STREET ON-RAMP IMPROVEMENTS	CONTRACT T201907402	BRIDGE NO. 1 748S 059	EXPANSION JOINT DETAILS PIERS 29S TO 31S	EX-03
				COUNTY NEW CASTLE	DESIGNED BY: D. NIZAMOFF		SECTION WRA
					CHECKED BY: W. GESCHREI		SHEET NO. 125

N:\31987-004\Contract_Ramp_D\CADD\Bridge\BR1-748S_EX03.dgn
8/23/2019 4:31:51 PM

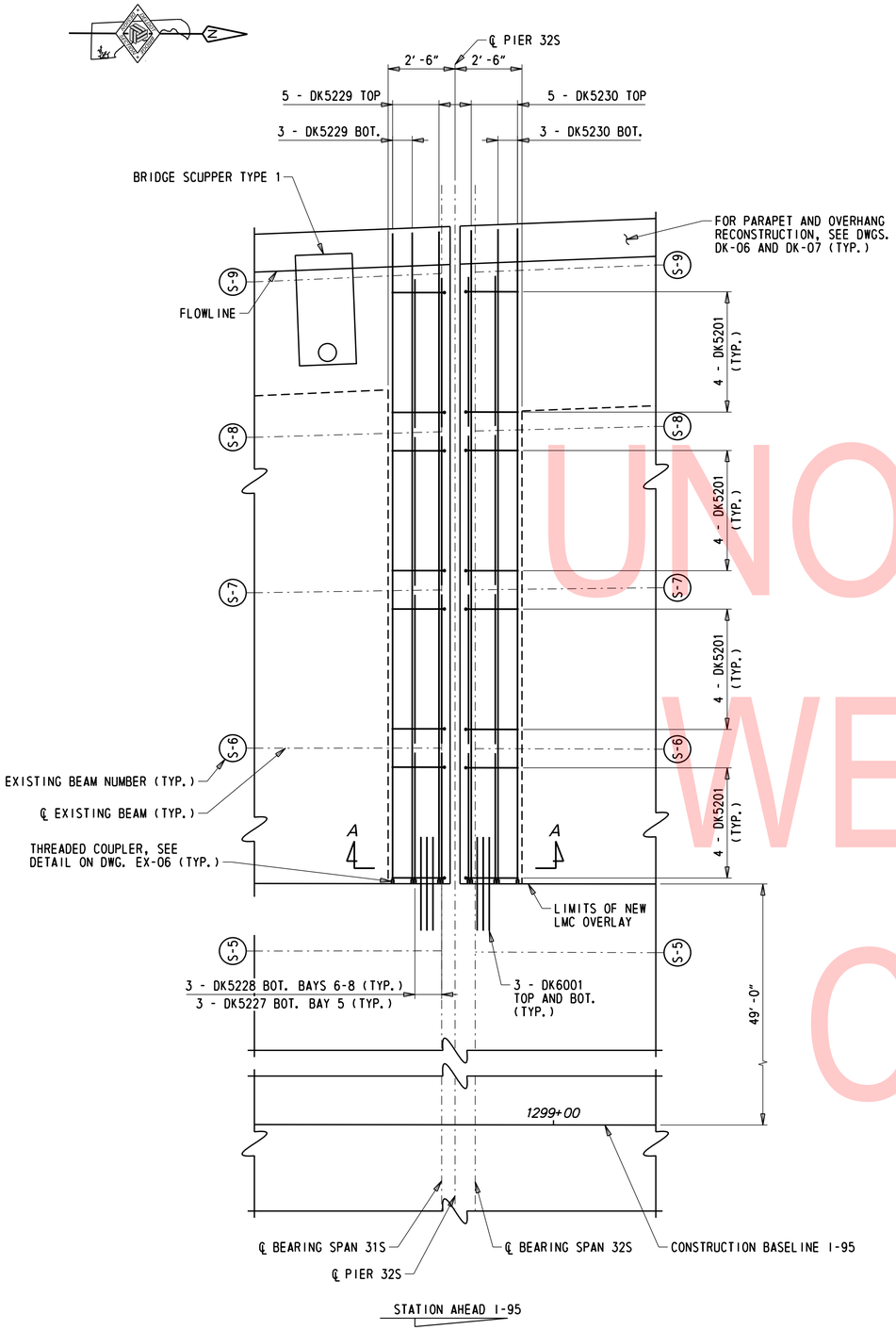

PLAN - PIER 32S

3/8" = 1'-0"

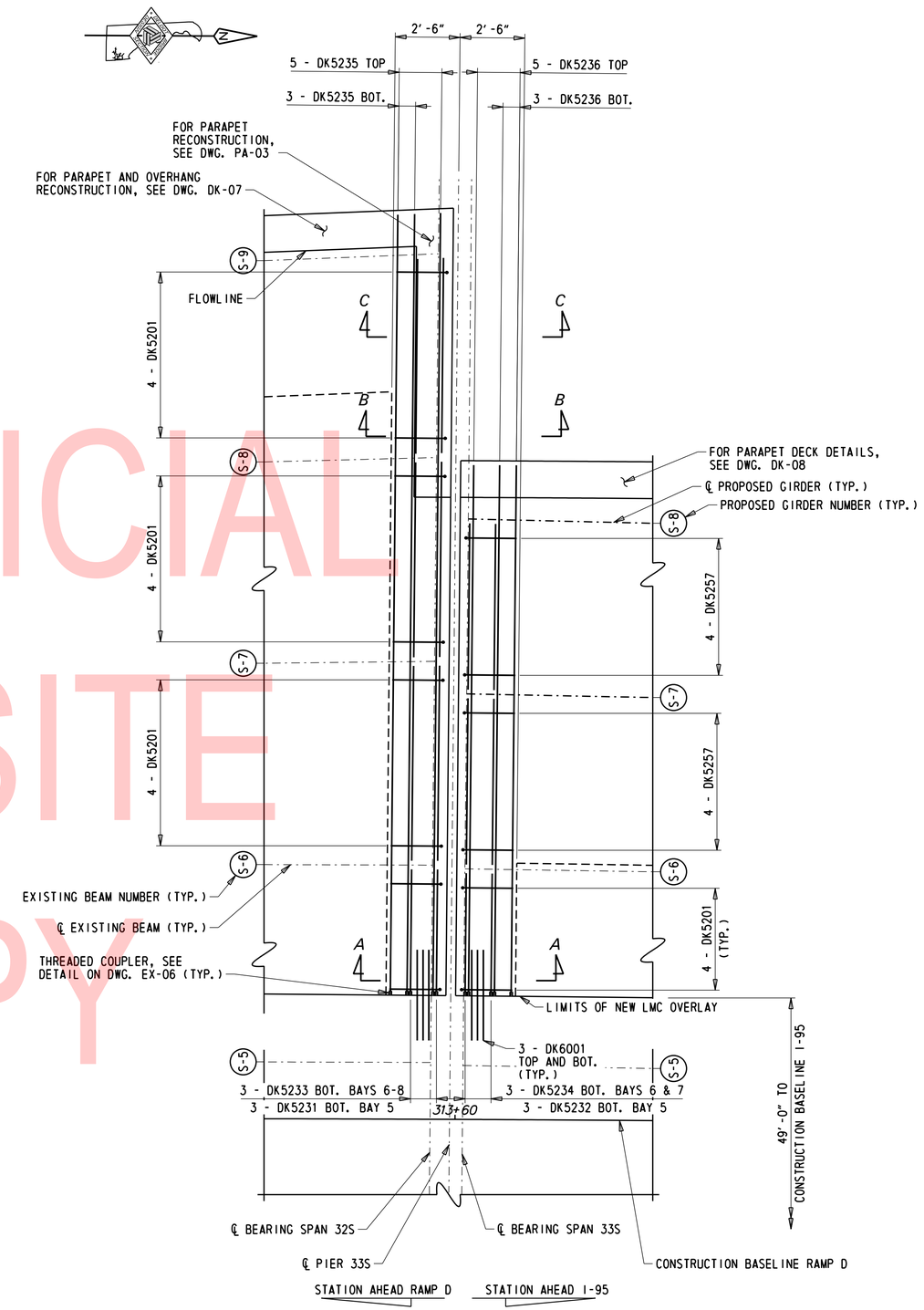

PLAN - PIER 33S

3/8" = 1'-0"

NOTES:

1. FOR SECTION A-A AND JOINT RECONSTRUCTION NOTES, SEE DWG. EX-02.
2. FOR SECTIONS B-B AND C-C, SEE DWG. PA-03.

UNOFFICIAL WEBSITE COPY

N:\31987-004\Contract_Ramp_D\CADD\Bridge\BR1-748S_EX04.dgn
8/23/2019 4:31:52 PM

ADDENDA / REVISIONS	SCALE AS NOTED	REHABILITATION OF I-95, 2ND STREET ON-RAMP IMPROVEMENTS	CONTRACT T201907402	BRIDGE NO. 1 748S 059	EXPANSION JOINT DETAILS PIERS 32S AND 33S	EX-04
			COUNTY NEW CASTLE	DESIGNED BY: D. NIZAMOFF		SECTION WRA
				CHECKED BY: W. GESCHREI		SHEET NO. 126

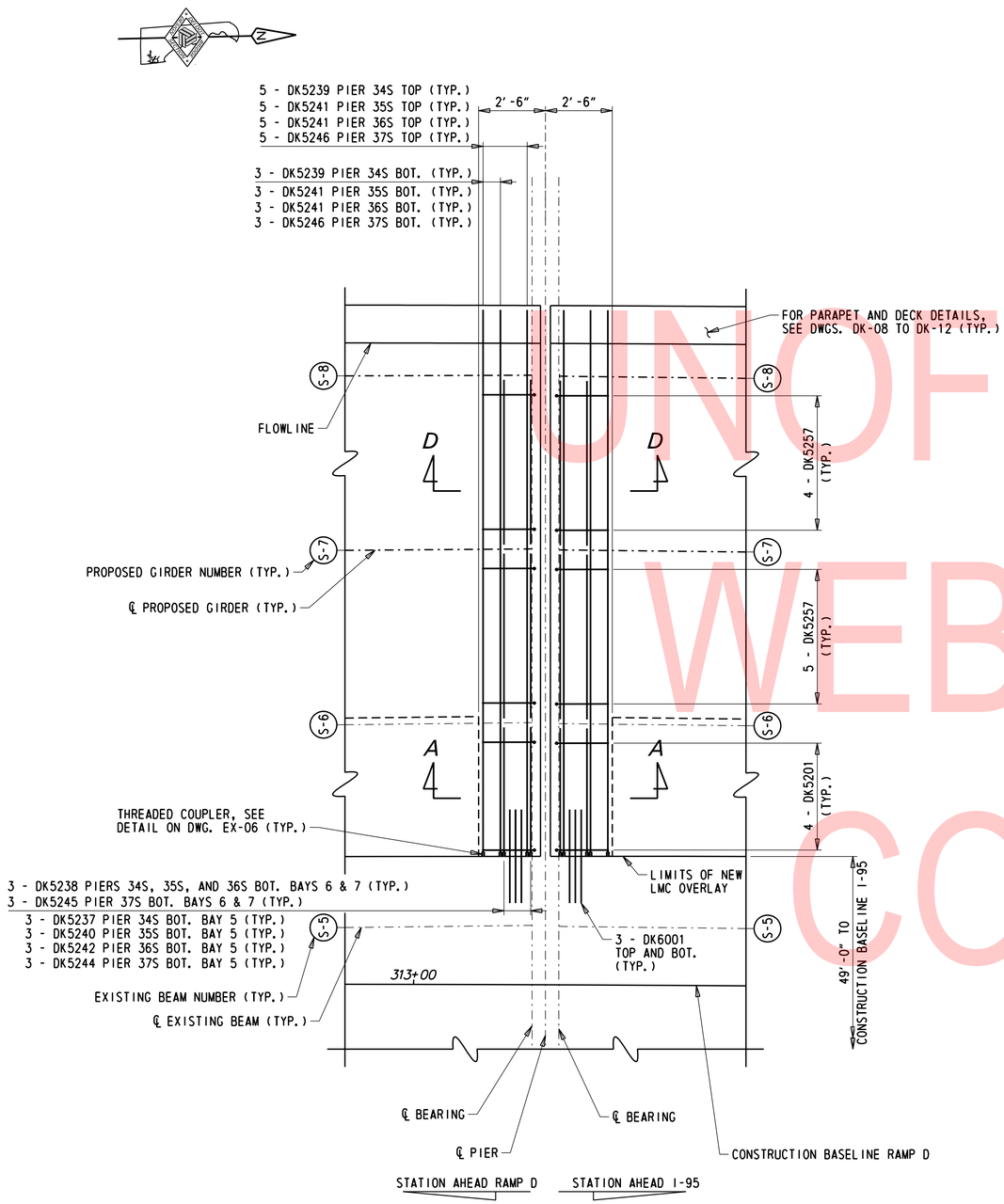

PLAN - PIERS 34S THROUGH 37S

3/8" = 1'-0"

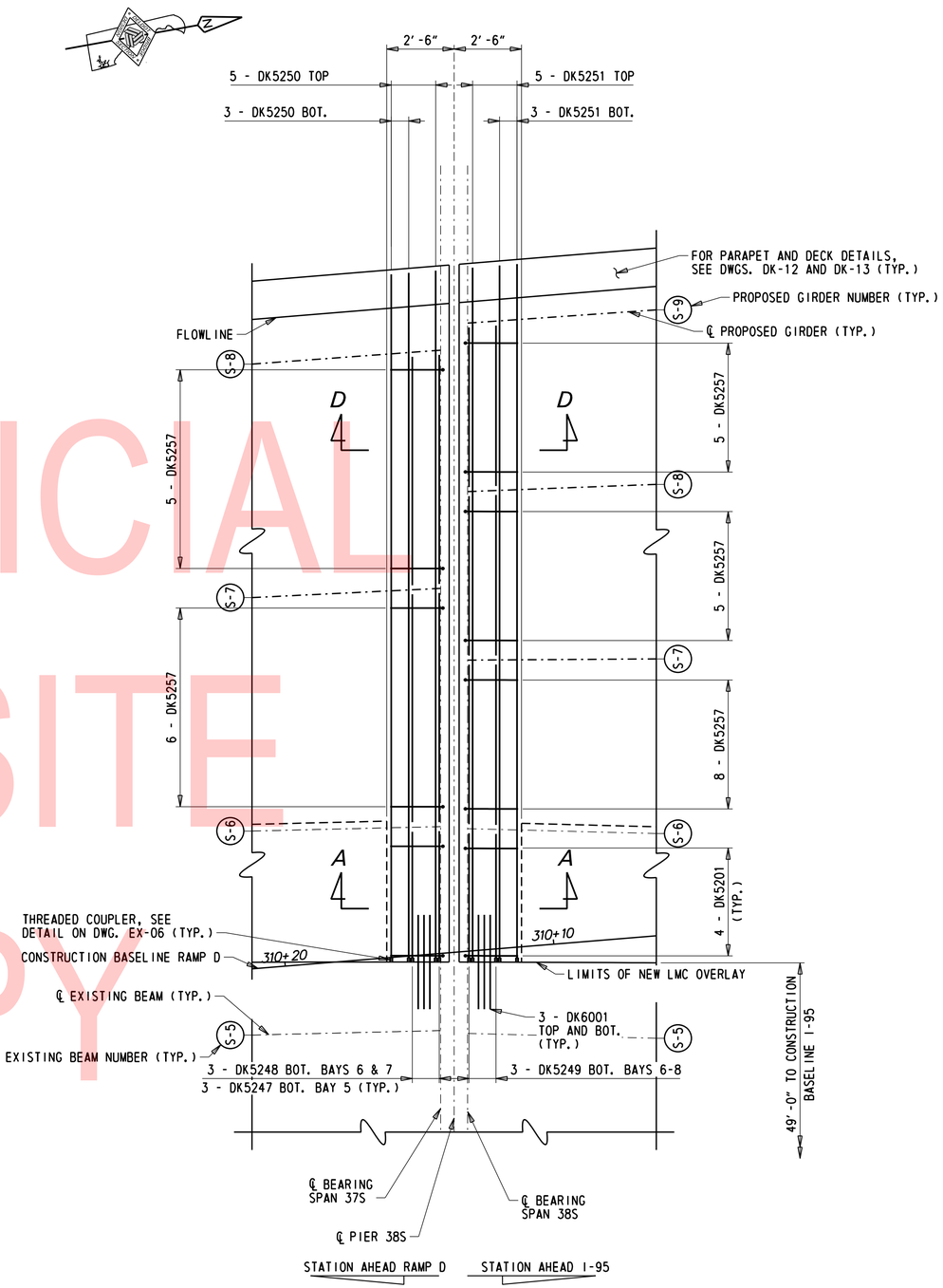

PLAN - PIER 38S

3/8" = 1'-0"

NOTES:

1. FOR SECTION A-A AND JOINT RECONSTRUCTION NOTES, SEE DWG. EX-02.
2. FOR SECTION D-D SEE DWG. EX-06.

UNOFFICIAL WEBSITE COPY

N:\31987-004\Contract_Ramp_D\CADD\Bridge\BRI-748S_EX05.dgn
8/23/2019 4:31:53 PM

ADDENDA / REVISIONS	SCALE AS NOTED	REHABILITATION OF I-95, 2ND STREET ON-RAMP IMPROVEMENTS	CONTRACT T201907402	BRIDGE NO. 1 748S 059	EXPANSION JOINT DETAILS PIERS 34S TO 38S	EX-05 SECTION WRA
			COUNTY NEW CASTLE	DESIGNED BY: D. NIZAMOFF		SHEET NO. 127
				CHECKED BY: W. GESCHREI		

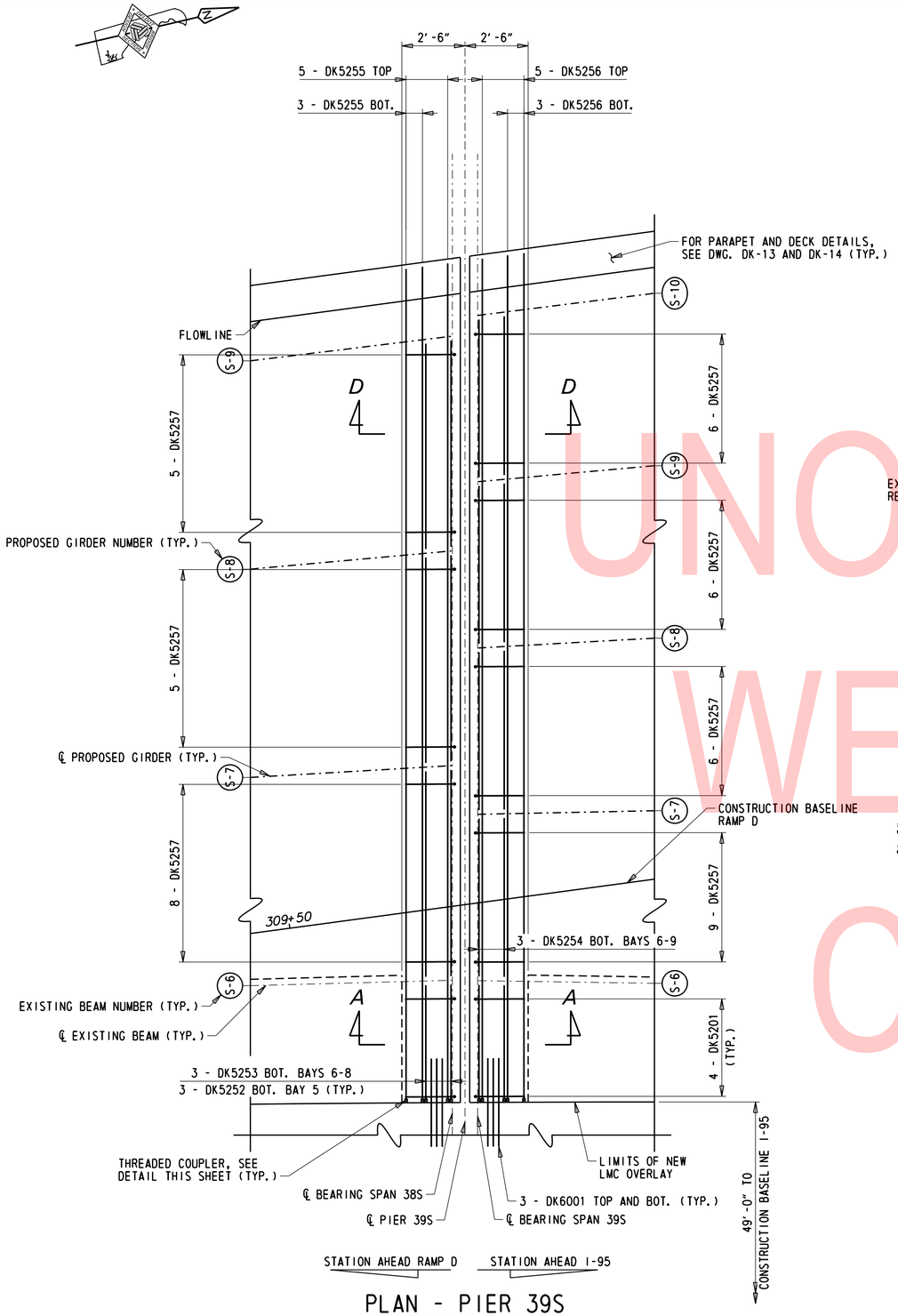

PLAN - PIER 39S

3/8" = 1'-0"

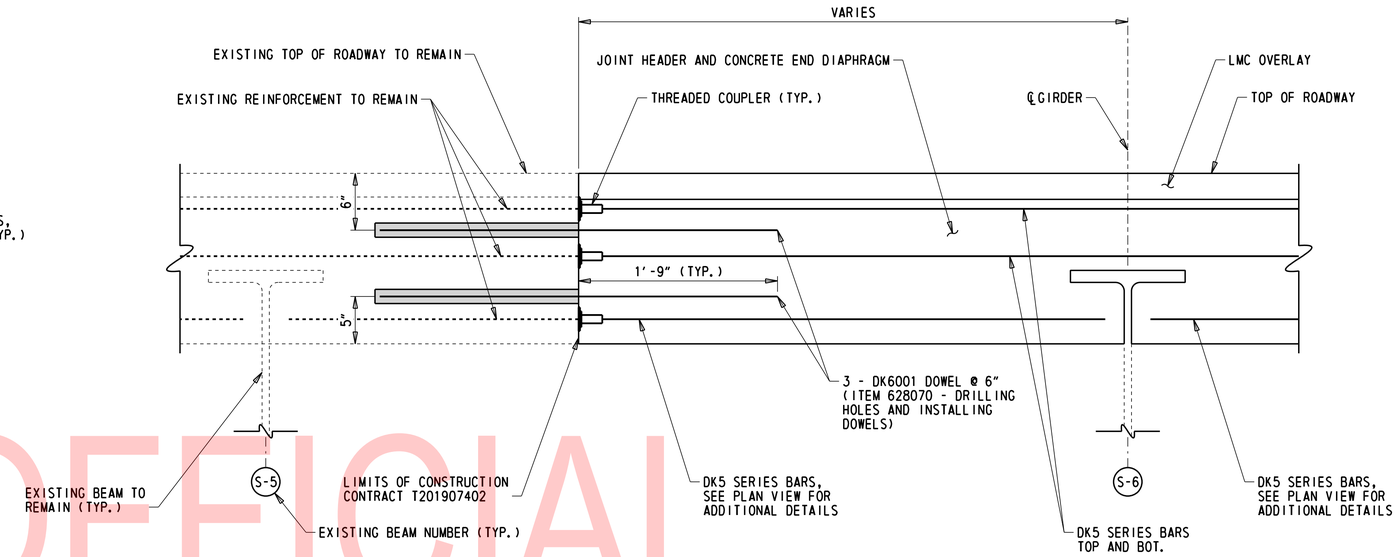

THREADED COUPLER MECHANICAL SPLICE DETAIL

1½" = 1'-0"

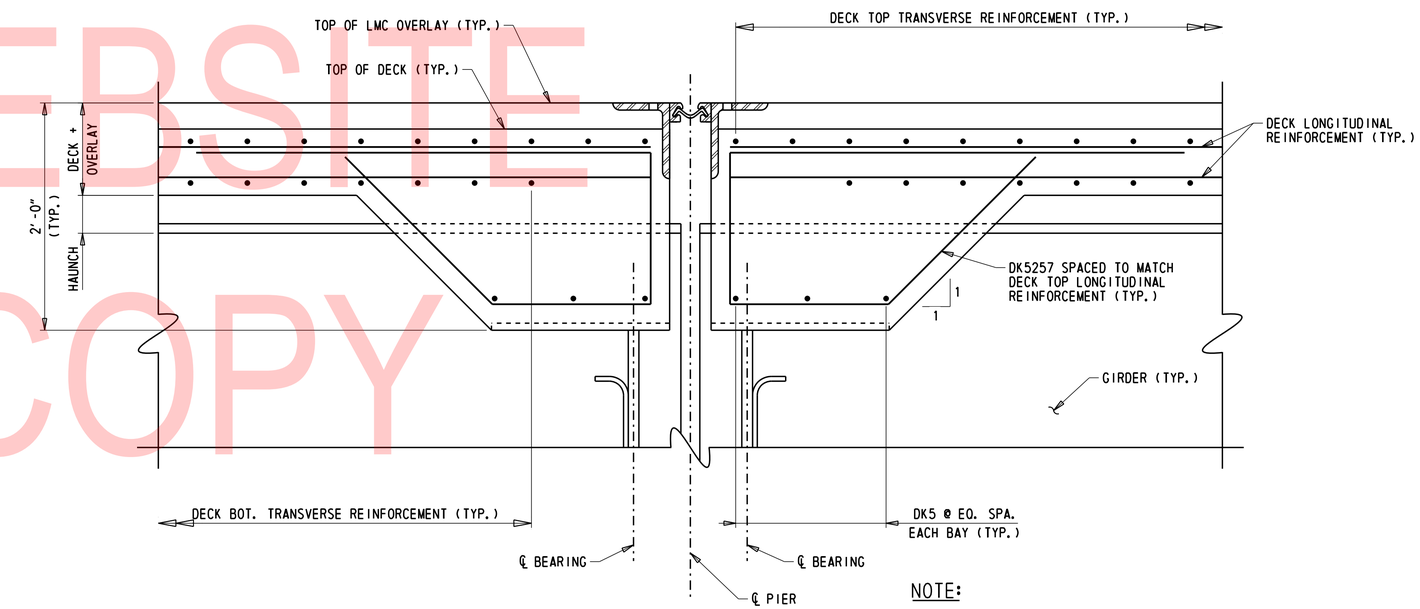

SECTION D-D

1½" = 1'-0"

NOTE:

TRANSVERSE BAR NUMBERS VARY. SEE APPLICABLE PLAN VIEW ON DWGS. EX-05 AND EX-06.

NOTES:

1. FOR SECTION A-A AND JOINT RECONSTRUCTION NOTES, SEE DWG. EX-02.

UNOFFICIAL WEBSITE COPY

N:\31987-004\Contract_Ramp_D\CADD\Bridge\BR1-748S_EX06.dgn
8/23/2019 4:31:54 PM

ADDENDA / REVISIONS	SCALE AS NOTED	REHABILITATION OF I-95, 2ND STREET ON-RAMP IMPROVEMENTS	CONTRACT T201907402	BRIDGE NO. 1 748S 059	EXPANSION JOINT DETAILS PIER 39S	EX-06
			COUNTY NEW CASTLE	DESIGNED BY: D. NIZAMOFF		SECTION WRA
				CHECKED BY: W. GESCHREI		SHEET NO. 128

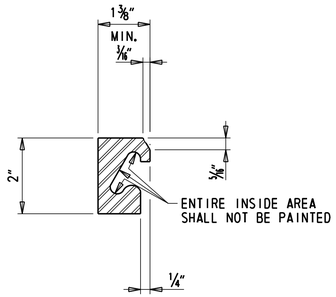

STEEL EXTRUSION DETAIL

6" = 1'-0"

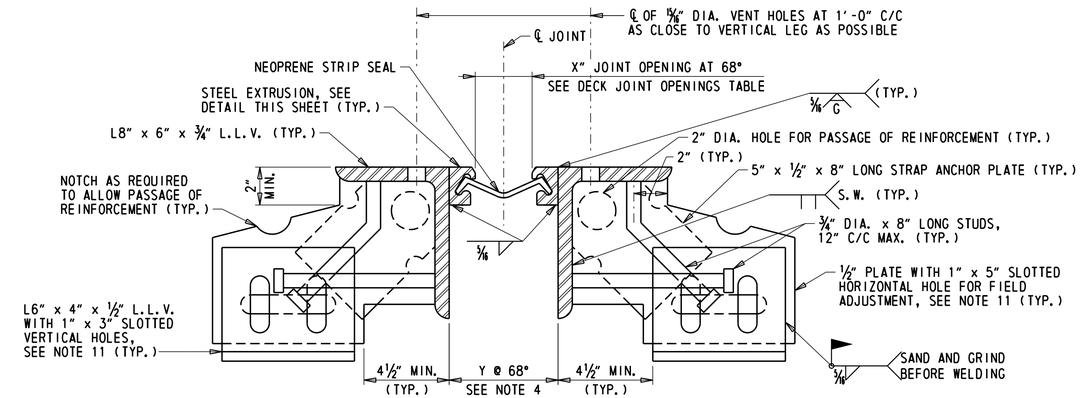

JOINT ASSEMBLY DETAIL

3" = 1'-0"

UNOFFICIAL WEBSITE COPY

STRIP SEAL EXPANSION JOINT NOTES:

1. STEEL FOR DECK JOINTS AND STEEL EXTRUSIONS SHALL BE AASHTO M 270, GR. 36 (ASTM A36) AT MINIMIM.
2. NEOPRENE EXTRUSION TO MEET ASTM D2628 MODIFIED, (RECOVERY TEST EXCLUDED).
3. THE EXPANSION JOINT SHALL BE CAPABLE OF SEALING THE DECK TO PREVENT MOISTURE AND OTHER CONTAMINANTS FROM DESCENDING THROUGH THE JOINT.
4. THE CONTRACTOR SHALL ADJUST THE OPEN JOINT (Y) AS REQUIRED BY THE WIDTH OF THE STEEL EXTRUSION USED SO AS TO PROVIDE A X" JOINT OPENING AT 68°F.
5. THE STRIP SEAL SHALL BE INSTALLED IN ONE PIECE ACROSS THE WIDTH OF THE JOINT RECONSTRUCTION. SPLICING OF THE STRIP SEAL IS NOT PERMITTED.
6. THE EXPANSION JOINT SYSTEM IS PAID FOR UNDER ITEM 624000 - PREFABRICATED EXPANSION JOINT SYSTEM, 3".
7. STEEL EXTRUSIONS SHALL BE HOT DIPPED GALVANIZED. ENTIRE JOINT ASSEMBLY AND EXTRUSION SHALL BE PAINTED AFTER FABRICATION UNLESS NOTED OTHERWISE USING URETHANE SYSTEM IN CONFORMANCE WITH SECTION 616 AND ASTM D6386. PAYMENT FOR GALVANIZING AND PAINTING WILL BE INCIDENTAL TO ITEM 624000 - PREFABRICATED EXPANSION JOINT SYSTEM, 3". PAINT COLOR SHALL MATCH THE EXISTING BEAMS/GIRDERS.
8. LUBRICANT-ADHESIVE FOR USE IN INSTALLING AND BONDING NEOPRENE SEAL ELEMENTS TO STEEL JOINT COMPONENTS SHALL BE A ONE QUART MOISTURE-CURING POLYURETHANE AND HYDROCARBON SOLVENT MIXTURE HAVING THE FOLLOWING PHYSICAL PROPERTIES:

AVERAGE WEIGHT, POUNDS PER GALLON	8±10%
SOLIDS CONTENT	65%
ADHESIVE SHALL REMAIN LIQUID FROM	5°F TO 120°F
FILM STRENGTH, AS PER ASTM D-412	2,000 PSI
ELONGATION	250%

9. HOLES SHALL BE PLACED IN THE RIB PLATES AND STRAP ANCHOR PLATES FOR BAR REINFORCEMENT. IF THIS IS DONE IN FIELD AN APPROVED EPOXY-BONDED PAINT SHALL BE USED TO TOUCH-UP THE HOLES. PAYMENT INCIDENTAL TO ITEM 624000 - PREFABRICATED EXPANSION JOINT SYSTEM, 3".
10. ANCHOR PLATE AND STEEL EXTRUSION SHALL BE WELDED TO BE WATERTIGHT AT CONSTRUCTION JOINTS. PAYMENT INCIDENTAL TO ITEM 624000 - PREFABRICATED EXPANSION JOINT SYSTEM, 3". AT AREAS WHERE STEEL MEMBERS ARE TO BE SPLICED, USE OF COMPLETE JOINT PENETRATION (CJP) AND PARTIAL JOINT PENETRATION (PJP) WELD ARE BOTH PERMITTED. THE THICKNESS OF PJP WELD MUST BE MINIMUM HALF OF THE STEEL MEMBER THICKNESS.
11. IF WELD OPTION IS PROPOSED, SLOTTED HOLES IN 1/2" PLATE AND L6" x 4" x 1/2" MAY BE OMITTED.
12. PARAPET JOINT PLATES ARE REQUIRED. SEE DETAILS ON DWG. EX-10.

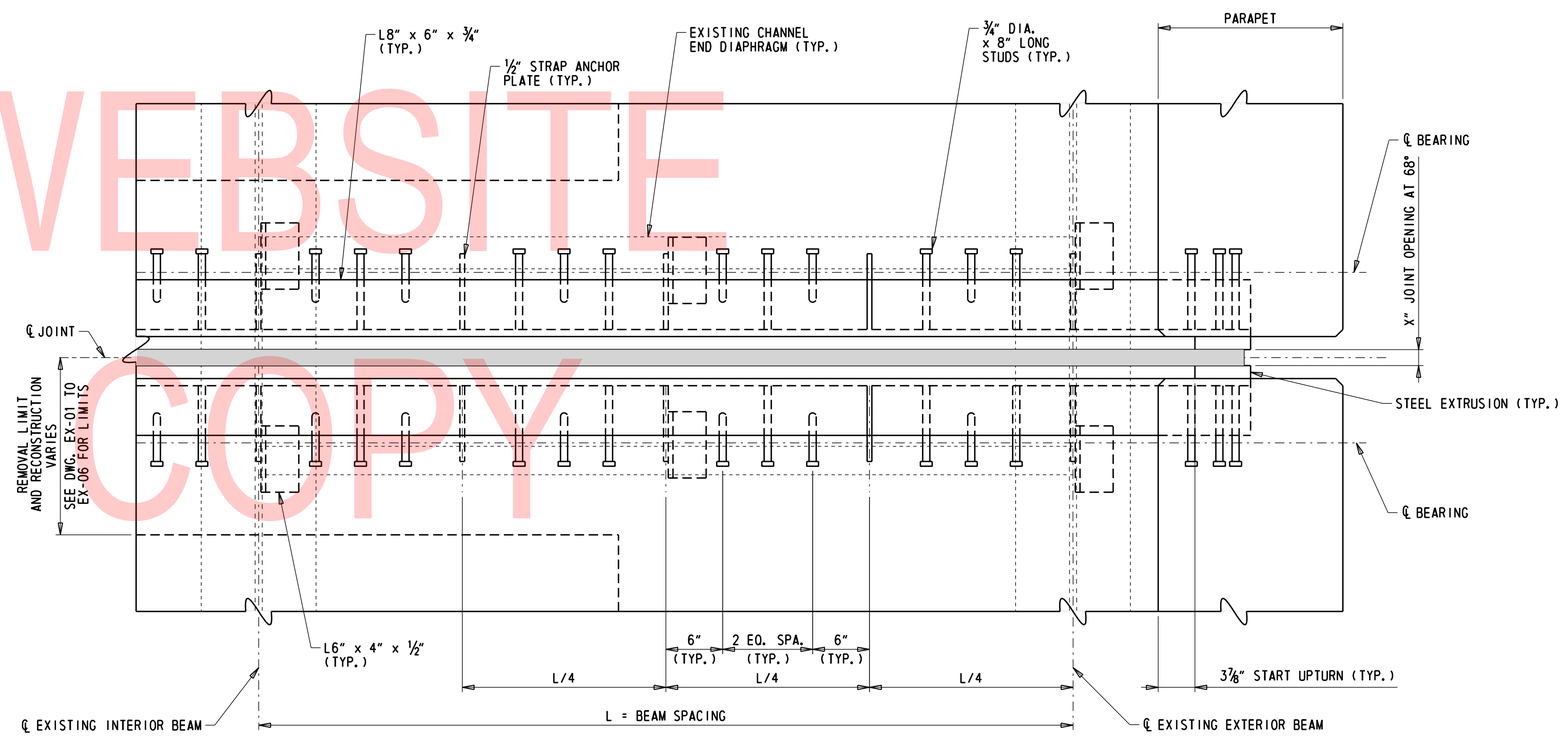

TYPICAL JOINT PLAN

1 1/2" = 1'-0"

N:\31987-004\Contract_Ramp_D\CADD\Bridge\BR1-748S_EX07.dgn
8/23/2019 4:31:54 PM

ADDENDA / REVISIONS	

SCALE AS NOTED

REHABILITATION OF I-95, 2ND STREET ON-RAMP IMPROVEMENTS

CONTRACT	BRIDGE NO.	1 748S 059
T201907402	DESIGNED BY: D. NIZAMOFF	
COUNTY		
NEW CASTLE	CHECKED BY: W. GESCHREI	

EXPANSION JOINT DETAILS JOINT ASSEMBLY

EX-07
SECTION
WRA
SHEET NO.
129

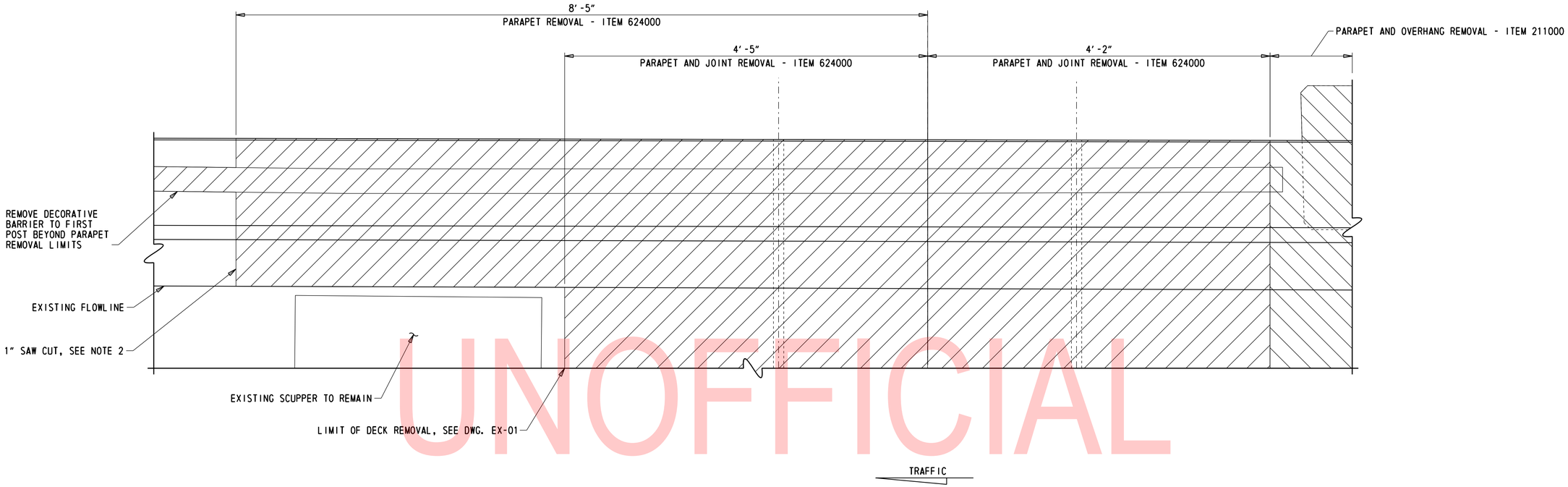

PLAN - PIER 26S JOINT AND PARAPET REMOVAL

1½" = 1'-0"

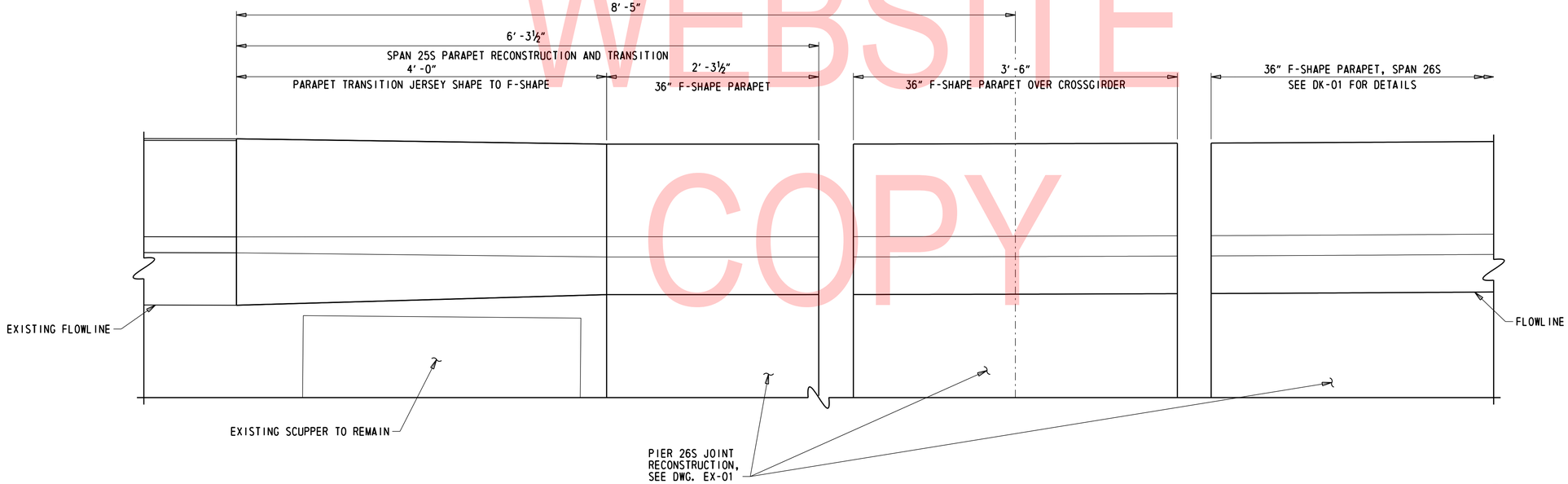

PLAN - PIER 26S JOINT AND PARAPET RECONSTRUCTION

1½" = 1'-0"

LEGEND:

- PARAPET AND JOINT REMOVAL LIMITS - ITEM 624000
- PARAPET AND OVERHANG REMOVAL LIMITS - ITEM 211000

NOTES:

1. FOR PARAPET DETAILS, SEE DWGS. PA-01 TO PA-03.
2. PAYMENT FOR 1" SAW CUT WILL BE INCIDENTAL TO ITEM 624000 - PREFABRICATED EXPANSION JOINT SYSTEM, 3".

UNOFFICIAL WEBSITE COPY

ADDENDA / REVISIONS		SCALE AS NOTED	REHABILITATION OF I-95, 2ND STREET ON-RAMP IMPROVEMENTS	CONTRACT T201907402	BRIDGE NO. 1 748S 059	PARAPET JOINT PLATE DETAILS – PIER 26S 1 OF 2	EX-08
				COUNTY NEW CASTLE	DESIGNED BY: D. NIZAMOFF		SECTION WRA
					CHECKED BY: W. GESCHREI		SHEET NO. 130

N:\31987-004\Contract_Ramp_D\CADD\Bridge\BR1-748S_EX08.dgn
8/23/2019 4:31:56 PM

NOTES:

1. FOR JOINT RECONSTRUCTION NOTES, SEE DWG. EX-02.
2. FOR JOINT ASSEMBLY AND STEEL EXTRUSION DETAILS AND STRIP SEAL EXPANSION NOTES, SEE DWG. EX-07.
3. FOR PARAPET JOINT PLATE DETAILS, SEE DWG. EX-10.
4. FOR TYPICAL PARAPET REINFORCEMENT DETAILS AND LOCATION OF 2" CONDUITS, SEE DWG. PA-01.
5. PAYMENT FOR 1" SAW CUT WILL BE INCIDENTAL TO ITEM 624000 - PREFABRICATED EXPANSION JOINT SYSTEM, 3".

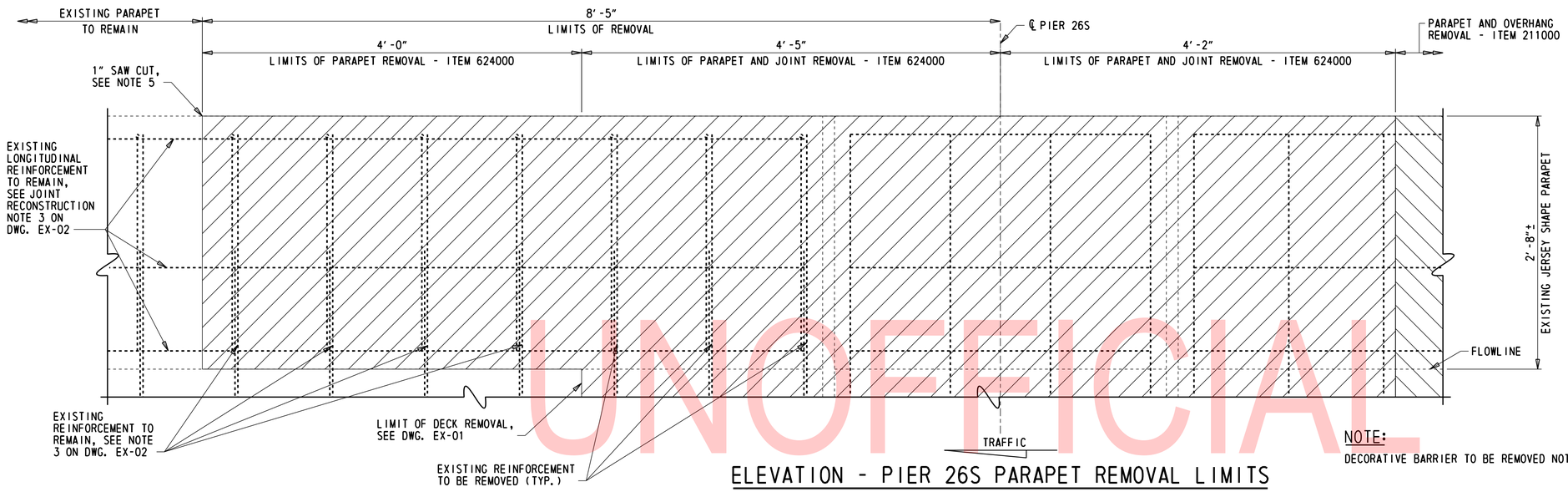

ELEVATION - PIER 26S PARAPET REMOVAL LIMITS

1½" = 1'-0"

NOTE:
DECORATIVE BARRIER TO BE REMOVED NOT SHOWN FOR CLARITY.

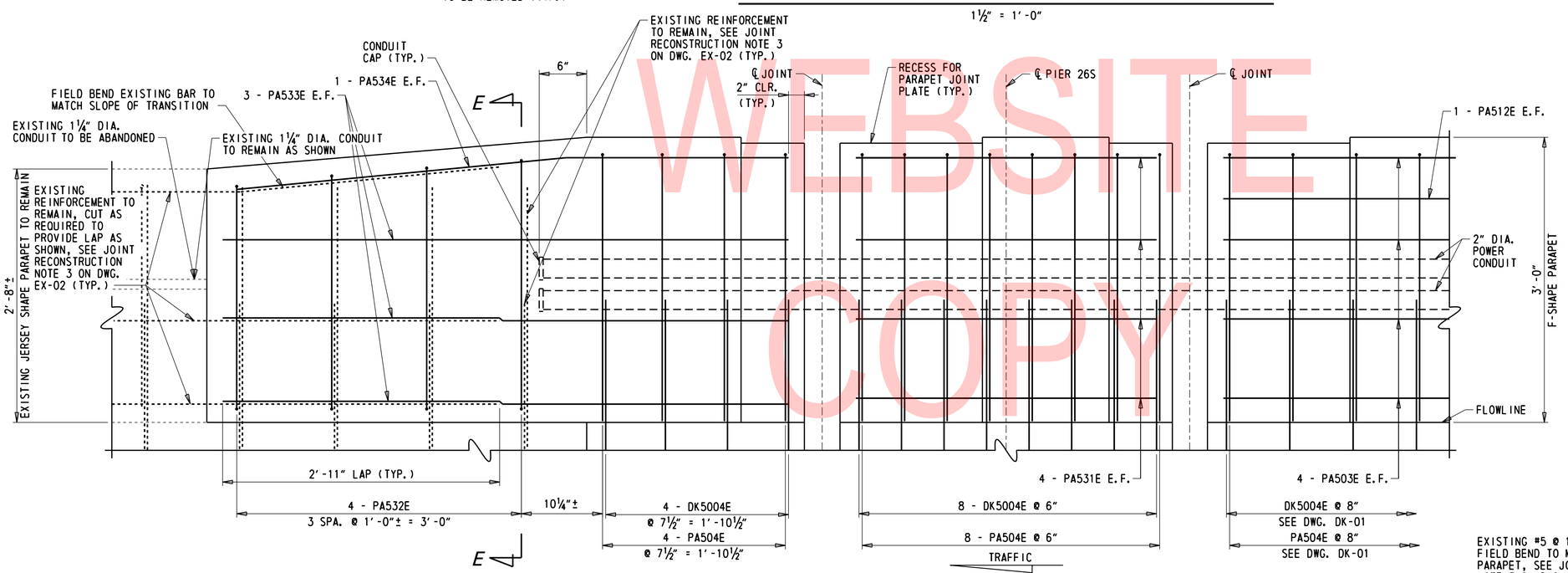

PIER 26S PARAPET RECONSTRUCTION - REINFORCEMENT

1½" = 1'-0"

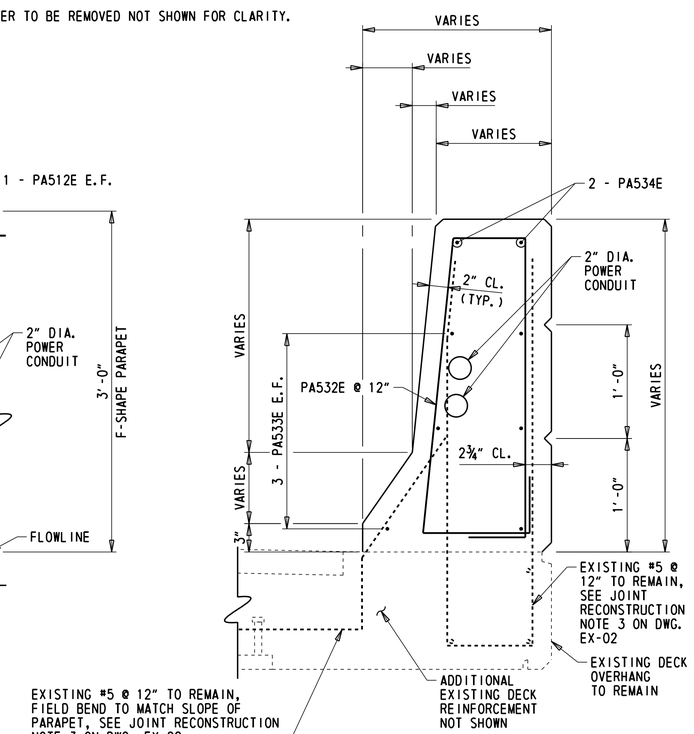

SECTION E-E

1½" = 1'-0"

LEGEND:

- PARAPET AND JOINT REMOVAL LIMITS - ITEM 624000
- PARAPET AND OVERHANG REMOVAL LIMITS - ITEM 211000

UNOFFICIAL WEBSITE COPY

ADDENDA / REVISIONS	SCALE AS NOTED	REHABILITATION OF I-95, 2ND STREET ON-RAMP IMPROVEMENTS	CONTRACT T201907402	BRIDGE NO. 1 748S 059	PARAPET JOINT PLATE DETAILS – PIER 26S 2 OF 2	EX-09 SECTION WRA SHEET NO. 131
			COUNTY NEW CASTLE	DESIGNED BY: D. NIZAMOFF		
				CHECKED BY: W. GESCHREI		

N:\31987-004\Contract_Ramp_D\CADD\Bridge\BRI-748S_EX09.dgn
8/23/2019 4:35:57 PM

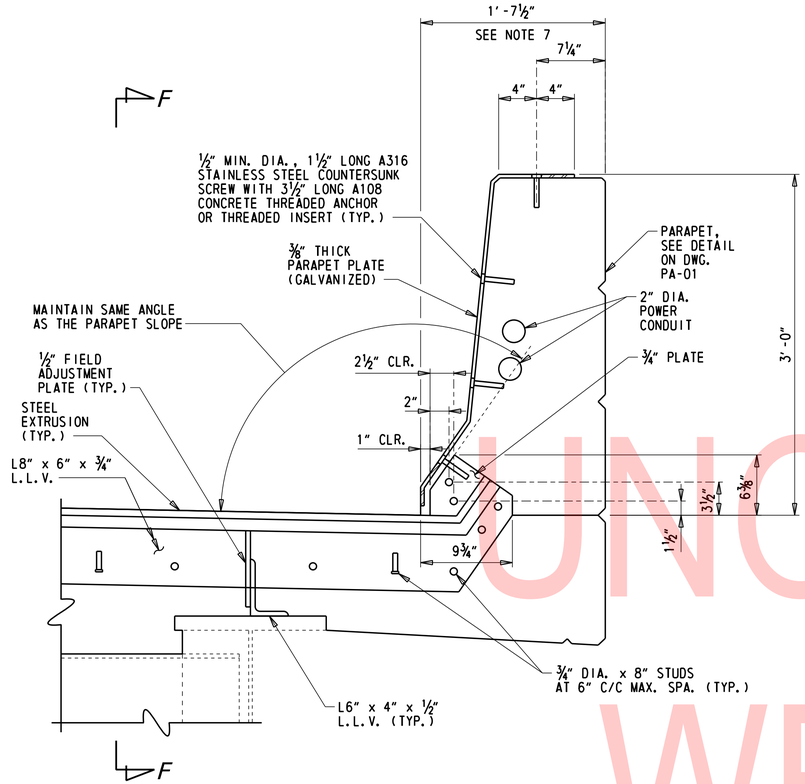

TYPICAL SECTION AT JOINT

1½" = 1'-0"

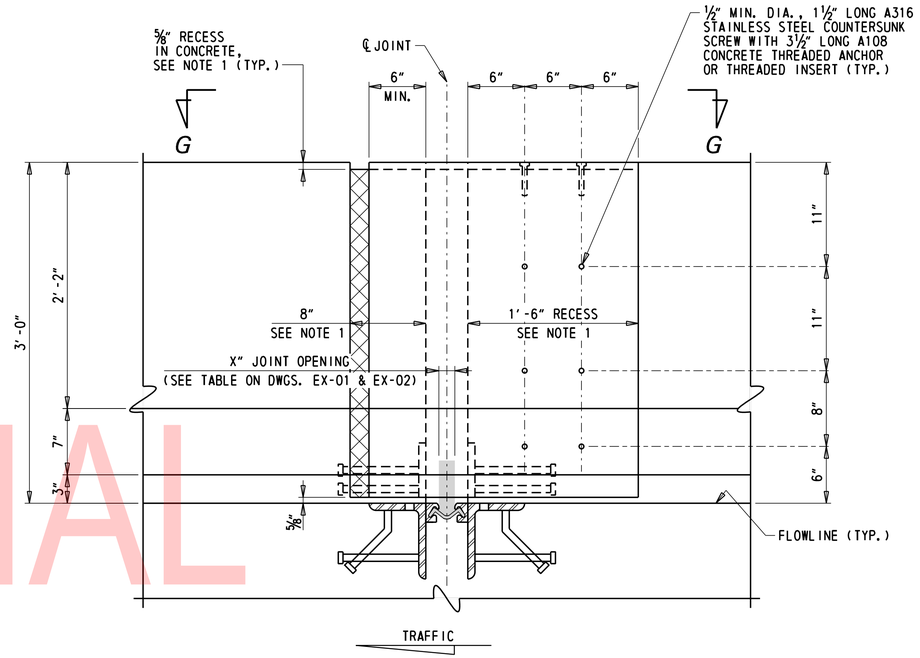

VIEW F-F

1½" = 1'-0"

PARAPET JOINT PLATE NOTES:

1. FORM CONCRETE RECESS AREA IN PARAPET AND GRIND TO PROVIDE SMOOTH SURFACE. APPLY ONE COAT OF ASPHALT CEMENT TO FREE SIDE OF JOINT IN ACCORDANCE WITH SECTION 1012 OF THE STANDARD SPECIFICATIONS TO ALLOW BENT SLIDING PLATE TO MOVE FREELY WITHOUT FRICTION. PAYMENT WILL BE INCIDENTAL TO ITEM 624000 - PREFABRICATED EXPANSION JOINT SYSTEM, 3".
2. PLACE PARAPET CONCRETE WITH STEEL BENT PLATES, INSERTS, AND BOLTS IN PLACE TO ENSURE PROPER ALIGNMENT OF INSERTS AND HOLES IN THE STEEL PLATE. REMOVE PLATES TO INSTALL SEAL. APPLY APPROVED BONDBREAKER TO SLIDING PLATES PRIOR TO PLACEMENT OF CONCRETE.
3. USE TYPE 316 STAINLESS STEEL COUNTERSUNK FLATHEAD SCREWS WITH ASTM A108 CONCRETE THREADED ANCHOR OR THREADED INSERT. HEAD OF SCREWS SHALL BE FLUSH WITH FACE OF STEEL PLATE.
4. THE CONTRACTOR SHALL SUBMIT WORKING DRAWINGS OF TRAFFIC BARRIER PLATES FOR APPROVAL.
5. ⅜" PARAPET PLATE SHALL BE UNPAINTED GALVANIZED STEEL. PAYMENT FOR PARAPET JOINT PLATES SHALL BE INCIDENTAL TO ITEM 624000 - PREFABRICATED EXPANSION JOINT SYSTEM, 3".
6. FOR JOINT ASSEMBLY DETAIL AND STRIP SEAL EXPANSION NOTES, SEE DWG. EX-07.
7. DETAIL SHOWN IS FOR 1'-7½" PARAPET IN SPANS 26S - 28S, DETAIL FOR 1'-5" PARAPET IN OTHER SPANS SIMILAR.

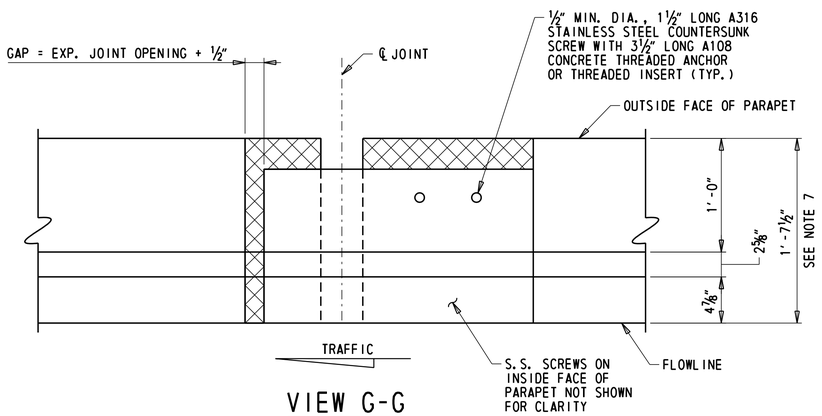

VIEW G-G

1½" = 1'-0"

UNOFFICIAL WEBSITE COPY

N:\31987-004\Contract_Romp_D\CADD\Bridge\BR1-748S_EX10.dgn
8/23/2019 4:31:57 PM

ADDENDA / REVISIONS	

SCALE AS NOTED

REHABILITATION OF I-95, 2ND STREET ON-RAMP IMPROVEMENTS

CONTRACT	BRIDGE NO.	1 748S 059
T201907402	DESIGNED BY: D. NIZAMOFF	
COUNTY		
NEW CASTLE	CHECKED BY: W. GESCHREI	

PARAPET JOINT PLATE DETAILS PIERS 27S TO 39S

EX-10
SECTION
WRA
SHEET NO.
132

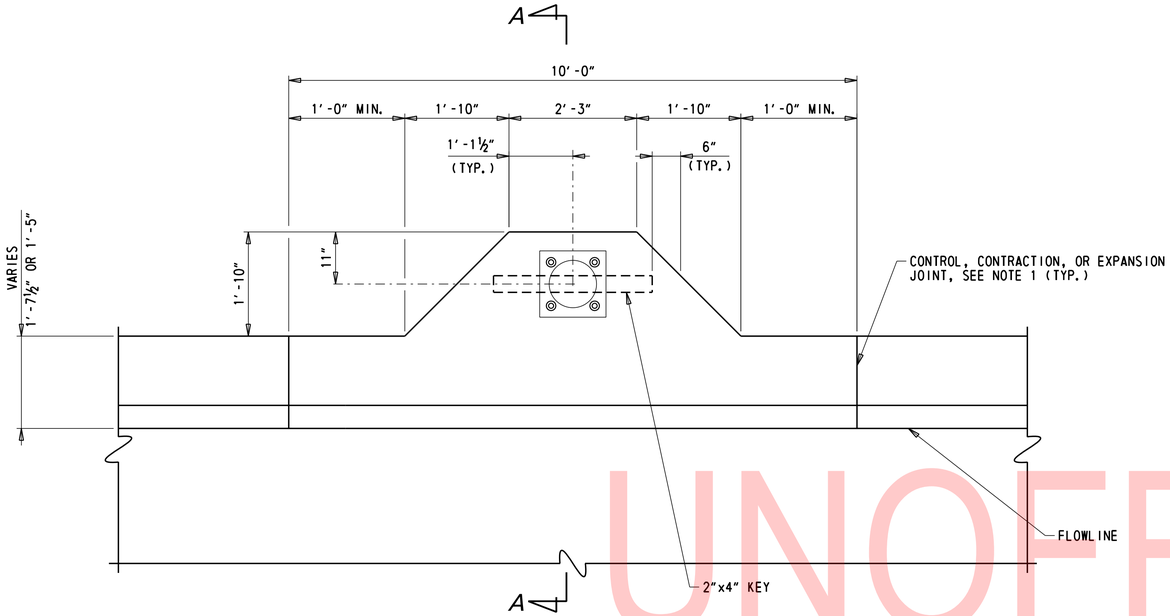

LIGHT BRACKET - PLAN

¾" = 1'-0"

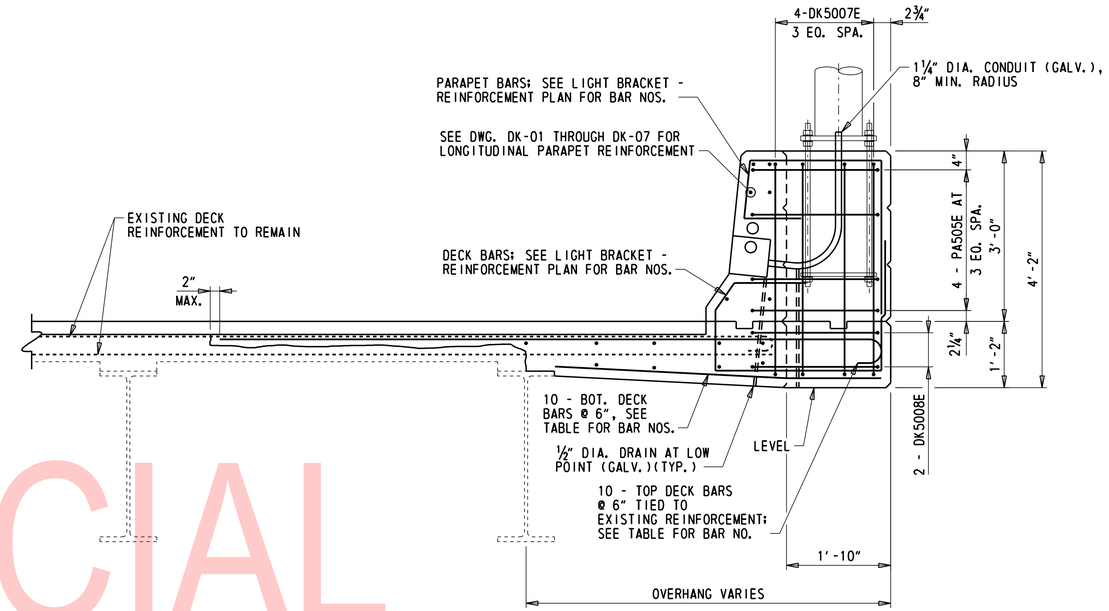

SECTION A-A

¾" = 1'-0"

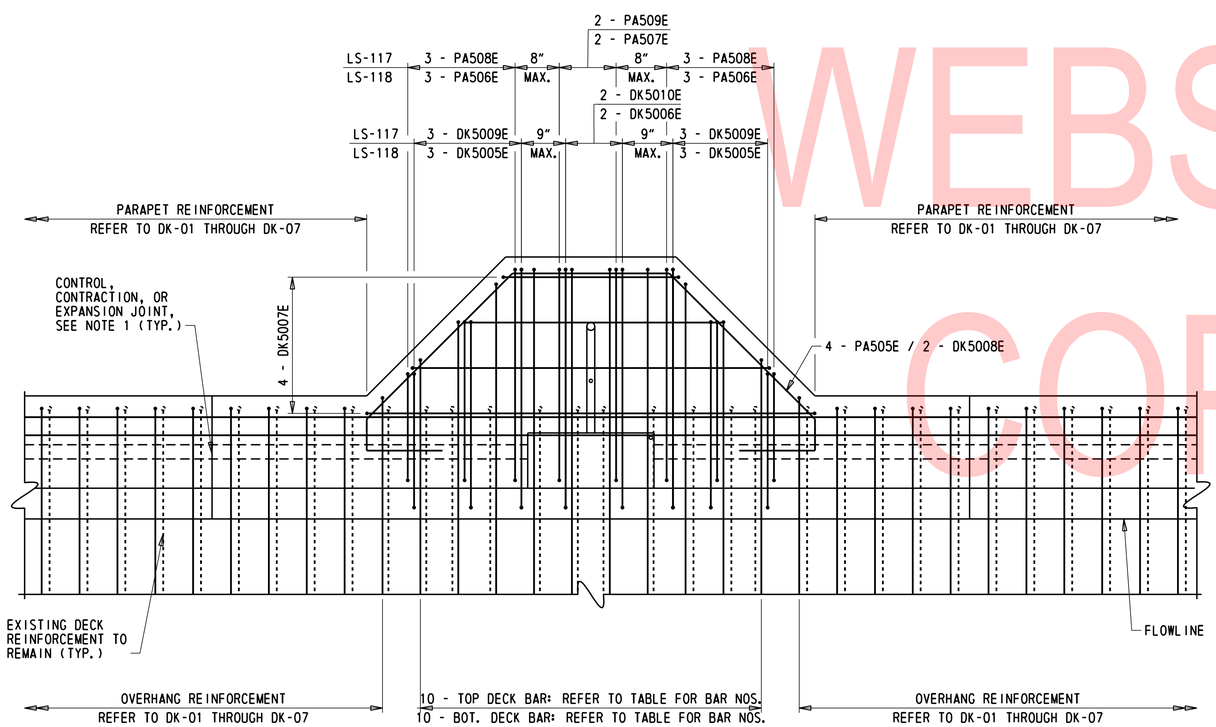

LIGHT BRACKET - REINFORCEMENT PLAN

1" = 1'-0"

LIGHT BRACKET TABLE

SPAN NO.	LIGHT STANDARD NO.	STATION	OFFSET	MAX. BRACKET OVERHANG LENGTH	TOP DECK BAR	BOT. DECK BAR
27S	LS-118	1295+75.83 I-95	61.8' LT.	3.90'	DK5018	DK5019
31S	LS-117	1298+28.5 I-95	71.7' LT.	3.95'	DK5032	DK5033

NOTES:

1. DETAIL SHOWN WITH CONTROL JOINT CONTINUOUS REINFORCEMENT.
2. SEE PARAPET REINFORCEMENT ELEVATIONS ON DWGS. DK-02 AND DK-06 FOR MORE INFORMATION.

UNOFFICIAL WEBSITE COPY

N:\31987-004\Contract_Ramp_D\CADD\Bridge\BRI-748S_DT01.dgn
8/23/2019 4:31:58 PM

ADDENDA / REVISIONS	SCALE AS NOTED	REHABILITATION OF I-95, 2ND STREET ON-RAMP IMPROVEMENTS	CONTRACT T201907402	BRIDGE NO. 1 748S 059	BRIDGE MOUNTED LIGHT BRACKET DETAILS	DT-01
			COUNTY NEW CASTLE	DESIGNED BY: D. NIZAMOFF		SECTION WRA
				CHECKED BY: W. GESCHREI		SHEET NO. 133

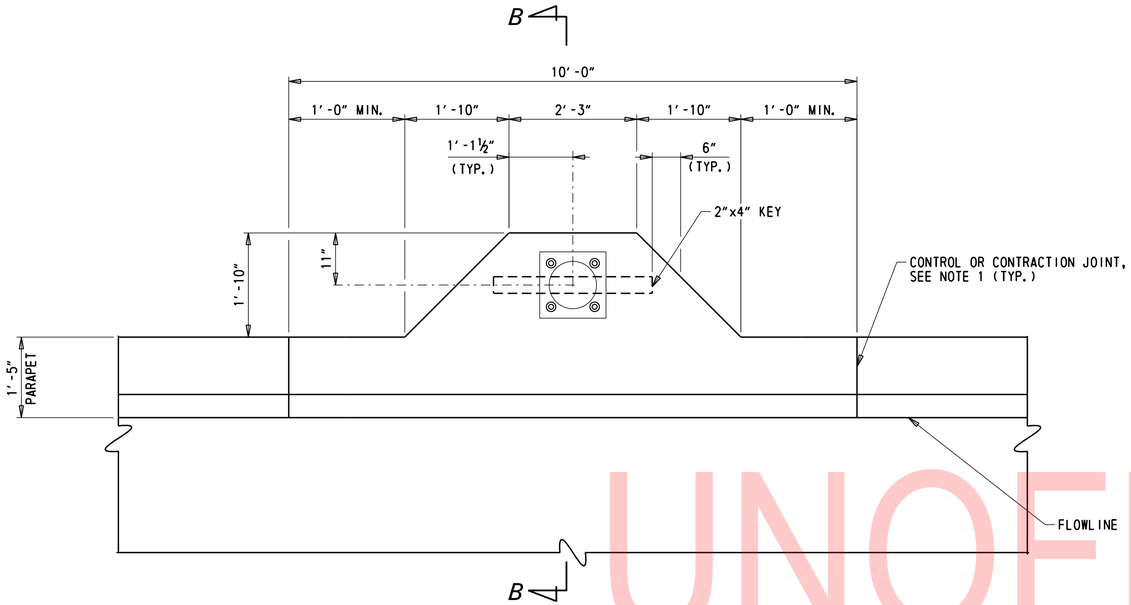

LIGHT BRACKET - PLAN

¾" = 1'-0"

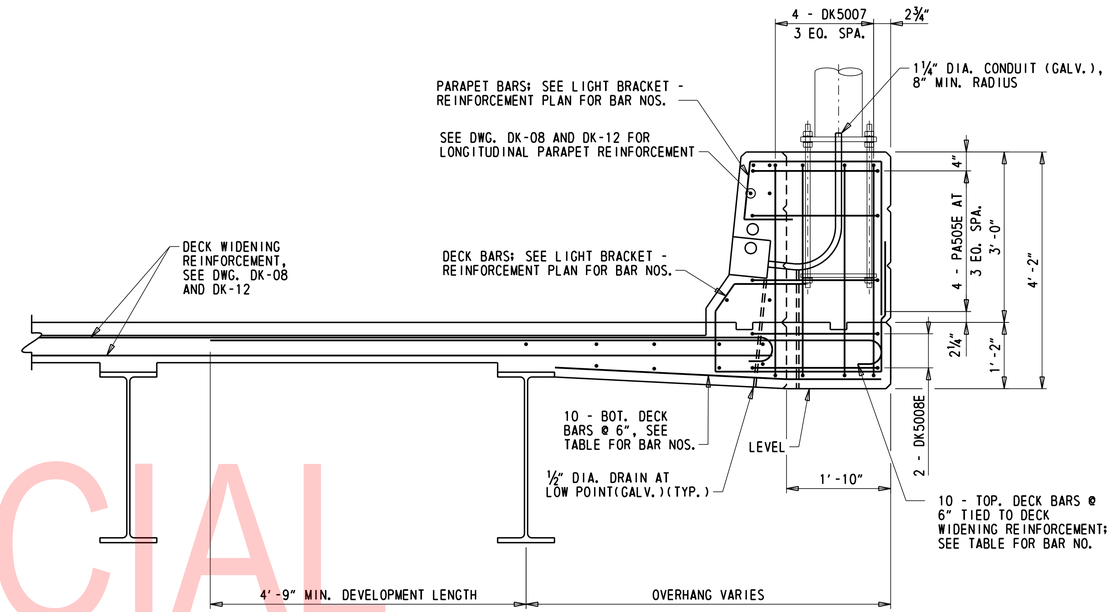

SECTION B-B

¾" = 1'-0"

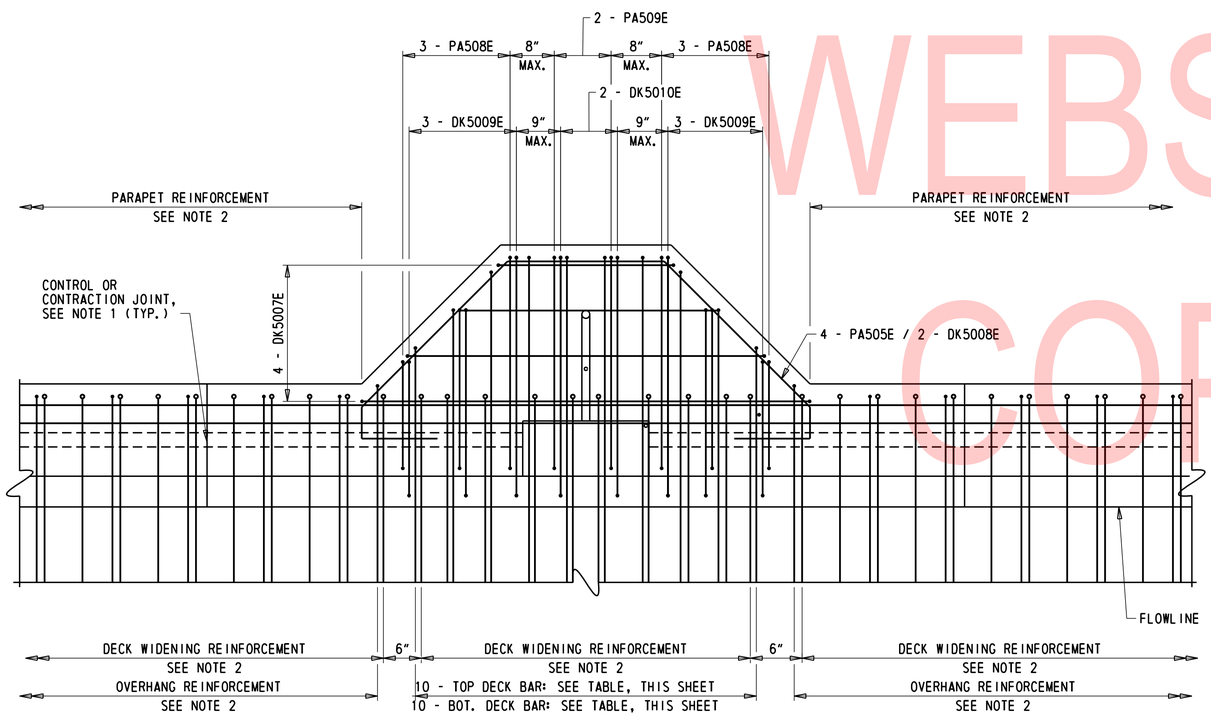

LIGHT BRACKET - REINFORCEMENT PLAN

1" = 1'-0"

LIGHT BRACKET TABLE

SPAN NO.	LIGHT STANDARD NO.	STATION	OFFSET	MAX. BRACKET OVERHANG LENGTH	TOP DECK BAR	BOT. DECK BAR
33S	LS-116	313+10.2 RAMP D	26.3' RT.	4.51'	DK5043	DK5045
37S	LS-115	310+36.6 RAMP D	26.3' RT.	4.76'	DK5065	DK5068

NOTES:

1. DETAIL SHOWN WITH CONTROL JOINT CONTINUOUS REINFORCEMENT.
2. SEE DWG. DK-08 AND DK-12 FOR TOP AND BOTTOM DECK BAR NUMBERS AND PARAPET BAR NUMBERS.

UNOFFICIAL WEBSITE COPY

N:\31987-004\Contract_Ramp_D\CADD\Bridge\BR1-748S_DT02.dgn
8/23/2019 4:31:59 PM

ADDENDA / REVISIONS	SCALE AS NOTED	REHABILITATION OF I-95, 2ND STREET ON-RAMP IMPROVEMENTS	CONTRACT T201907402	BRIDGE NO. 1 748S 059	BRIDGE MOUNTED LIGHT BRACKET DETAILS	DT-02
			COUNTY NEW CASTLE	DESIGNED BY: D. NIZAMOFF		SECTION WRA
				CHECKED BY: W. GESCHREI		SHEET NO. 134

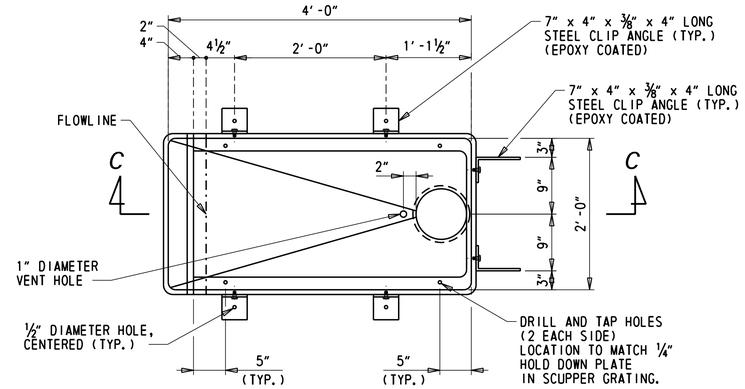

TYPE I PLAN VIEW

1" = 1'-0"
(SPANS 27S TO 32S)

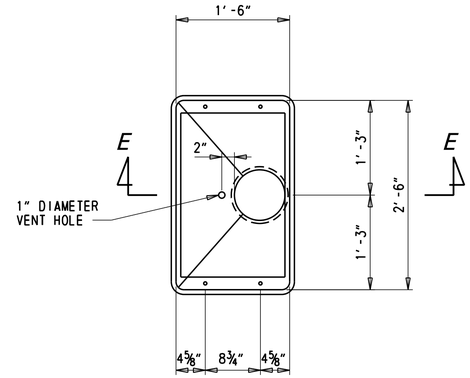

TYPE III PLAN VIEW

1" = 1'-0"
(SPANS 35S, 37S, 39S)

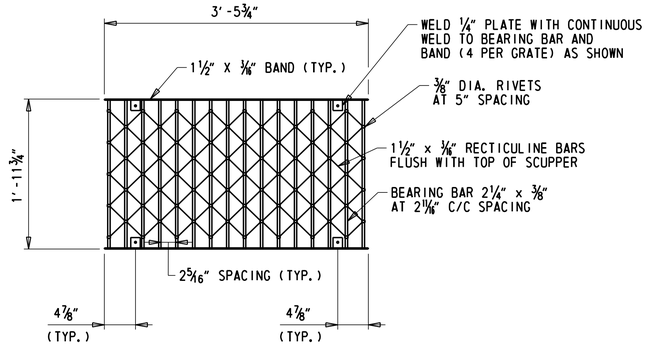

PLAN - TYPE I SCUPPER GRATE

1" = 1'-0"

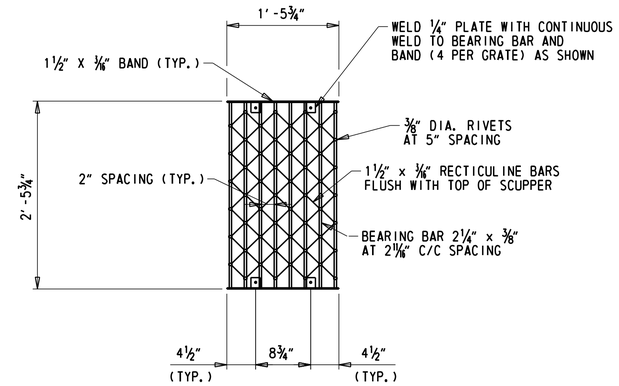

PLAN - TYPE III SCUPPER GRATE

1" = 1'-0"

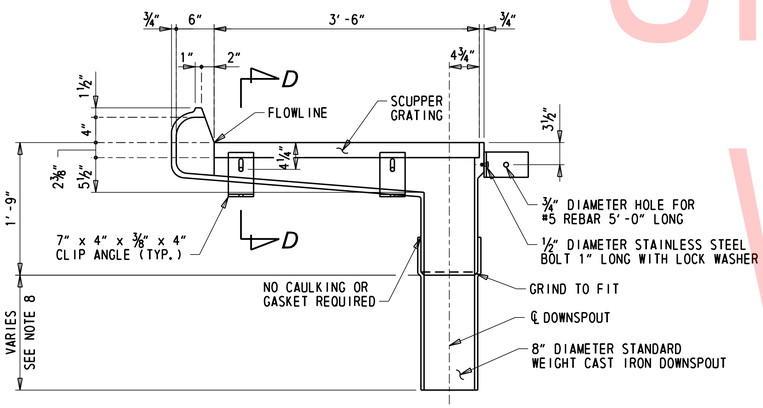

SECTION C-C

1" = 1'-0"

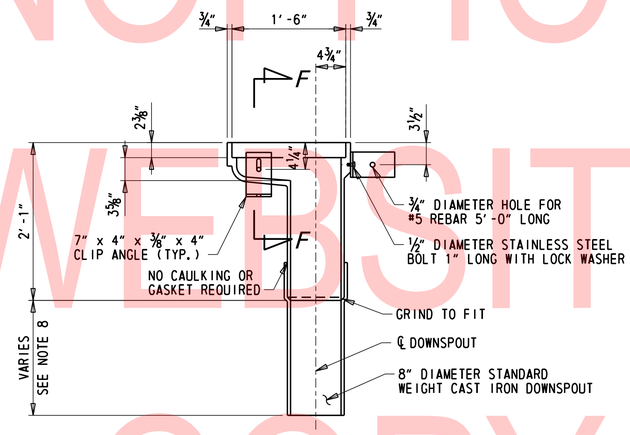

SECTION E-E

1" = 1'-0"

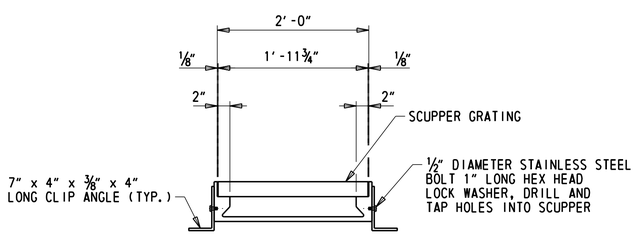

SECTION D-D

1" = 1'-0"

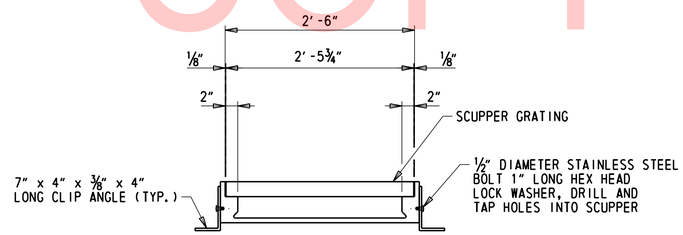

SECTION F-F

1" = 1'-0"

NOTES:

1. SCUPPERS SHALL BE GRAY CAST IRON, CONFORMING TO ASTM M105 CLASS 30.
2. GRATINGS SHALL BE STRUCTURAL STEEL CONFORMING TO ASTM A709 GRADE 36 AND EPOXY COATED.
3. STAINLESS STEEL BOLTS SHALL CONFORM TO ASTM A193, GRADE B8M (UNS DESIGNATION TYPE 316).
4. TYPE 1 SCUPPERS SHALL BE PAINTED IN CONFORMANCE WITH SUBSECTION 616.02 OF THE STANDARD SPECIFICATIONS. OUTSIDE OF SCUPPERS EXPOSED TO ATMOSPHERE BELOW THE CONCRETE DECK SLAB SHALL RECEIVE THE FIELD PAINT REQUIRED FOR STRUCTURAL STEEL AND SHALL MATCH THE COLOR OF EXISTING BEAM.
5. THE FURNISHING, FABRICATING, ERECTING, ETC. OF ALL SCUPPERS FOR THE BRIDGE, COMPLETE IN PLACE, WILL NOT BE MEASURED BUT WILL BE PAID FOR UNDER ITEM 615001 - STEEL STRUCTURES (LS).
6. THERE MUST BE A MINIMUM OF 5" OF CONCRETE UNDER ENTIRE SCUPPER AREA, WITH A MAT OF REBARS EQUIVALENT IN SIZE AND SPACING TO NORMAL BOTTOM MAT PATTERN OF DECK. THIS MAY REQUIRE THE LOWERING OF THE DECK IN THIS AREA. SEE DETAILS ON DWGS. DT-04 AND DT-05.
7. GRATE AND SCUPPER SHALL BE SHIPPED AS UNIT WITH GRATE HOLD DOWN BOLTS IN PLACE (NOT WELDED).
8. EXTEND DOWNSPOUT TO A MINIMUM OF 8" BELOW THE BOTTOM FLANGE OF THE NEAREST STRUCTURAL STEEL SUPERSTRUCTURE MEMBER. DOWNSPOUT TERMINATION SHALL NOT REDUCE THE EXISTING CLEARANCES OVER ROADWAY(S).
9. SCUPPERS SHALL BE PAINTED WITH ONE SHOP COAT INSIDE AND OUTSIDE. SHOP PAINT SHALL BE INORGANIC ZINC RICH, M300, TYPE I OR IA WITH ZINC DUST MEETING THE REQUIREMENTS OF ASTM D 520, TYPE II. INSIDES OF SCUPPERS TO BE PAINTED WITH ONE COAT OF COAL TAR EPOXY SSPC-PAINT 16. VERTICAL SHOWING SURFACE IN CURB FACE AND HORIZONTAL SHOWING SURFACE IN ROADWAY TO BE PAINTED WITH THE SECOND AND FINISH COATS SPECIFIED IN NOTE 10. OUTSIDE OF SCUPPERS EXPOSED TO ATMOSPHERE BELOW THE CONCRETE DECK SLAB, SHALL RECEIVE THE FIELD PAINT REQUIRED FOR STRUCTURAL STEEL IN CONFIGURATION WITH SECTION 616. IF THERE IS NO PAINT COLOR INDICATED, THE SCUPPER SHALL BE PAINTED TO MATCH COLOR OF EXISTING BEAM.
10. PAINT SYSTEM E
    1) PRIMER COAT - ALUMINUM EPOXY MASTIC. DRY FILM THICKNESS 5-8 MILS. ALUMINUM EPOXY MASTIC PRIMER SHALL HAVE ONE COMPONENT THAT IS THE CONDENSATION PRODUCT OF THE REACTION OF EPICHLOROHYDRIN WITH BISPHENOL A. DRYING TIMES SHALL BE 8 HOURS MAXIMUM TO TOUCH, 24 HOURS MINIMUM TO 30 DAYS MAXIMUM FOR RECOAT, AND 48 HOURS MAXIMUM FOR HARD. MINIMUM POT LIFE SHALL BE THREE HOURS. SOLIDS BY WEIGHT SHALL BE 90 PERCENT MINIMUM AND 80 TO 90 PERCENT BY VOLUME. VISCOSITY SHALL BE 95 TO 140 KU AND FLEXIBILITY SHALL PASS A 180 DEGREE BEND AROUND A ¾ INCH MANDREL WHEN TESTED PER ASTM D522. THE MATERIAL SHALL RESIST SAGGING WHEN TESTED PER ASTM D4400 WITH NO SAGGING AT THE MANUFACTURER'S RECOMMENDED WET FILM THICKNESS. THE MATERIAL SHALL WEIGH 13.0±0.5 LB/GAL.
    2) SECOND COAT - EPOXY POLYAMIDE. DRY FILM THICKNESS 5-8 MILS. EPOXY POLYAMIDE INTERMEDIATE COAT SHALL HAVE ONE COMPONENT THAT IS THE CONDENSATION PRODUCT OF THE REACTION OF EPICHLOROHYDRIN WITH BIPHENOL A. THE EPOXY POLYAMIDE SHALL HAVE A 3.0 MINIMUM FINENESS OF GRIND (HEGMAN UNITS), MINIMUM SOLIDS OF 75 PERCENT BY WEIGHT AND 62 PERCENT BY VOLUME. MAXIMUM DRY TIME TO TOUCH AND RECOAT SHALL BE 6 AND 15 HOURS, RESPECTIVELY.
    3) FINISH COAT - ALIPHATIC URETHANE. DRY FILM THICKNESS 2-3 MILS. FINISH COAT SHALL HAVE MINIMUM SOLIDS OF 70 PERCENT BY WEIGHT AND 47 PERCENT BY VOLUME. DRYING TIME TO TOUCH AND HARD SHALL BE THE MINIMUM RECOMMENDED BY THE PAINT MANUFACTURER.

UNOFFICIAL WEBSITE COPY

ADDENDA / REVISIONS		SCALE AS NOTED	REHABILITATION OF I-95, 2ND STREET ON-RAMP IMPROVEMENTS	CONTRACT T201907402	BRIDGE NO. 1 748S 059	TYPE I AND TYPE III SCUPPER DETAILS	DT-03 SECTION WRA
				COUNTY NEW CASTLE	DESIGNED BY: D. NIZAMOFF		SHEET NO. 135
					CHECKED BY: W. GESCHREI		

N:\31987-004\Contract_Ramp_D\CADD\Bridge\BR1-748S_SCUPPER1.dgn
8/23/2019 4:32:00 PM

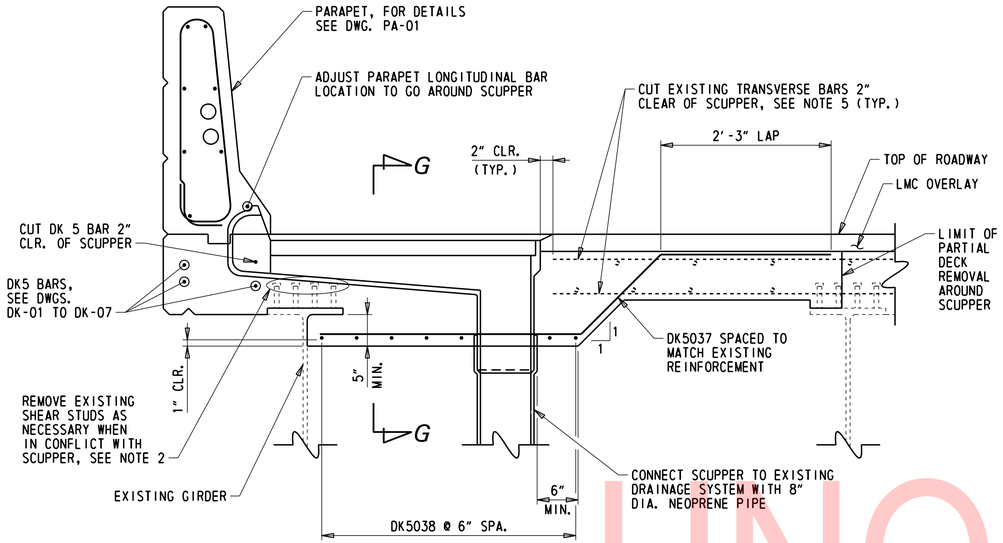

ADDITIONAL REINFORCEMENT - TYPE I TRANSVERSE SECTION

1" = 1'-0"

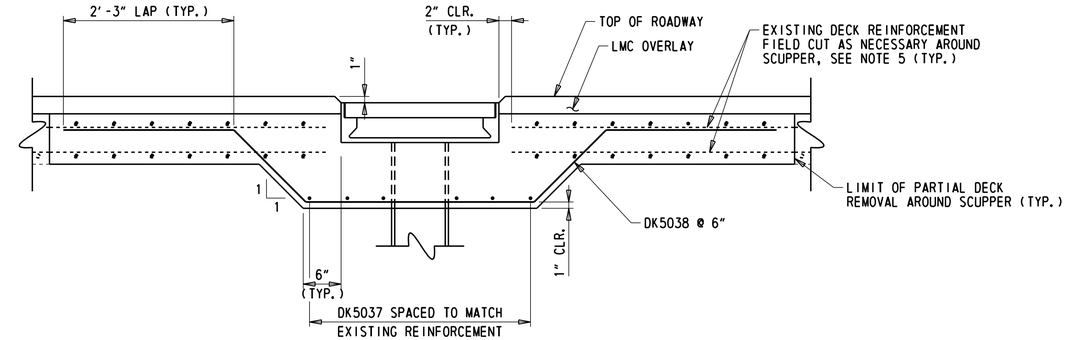

SECTION G-G

1" = 1'-0"

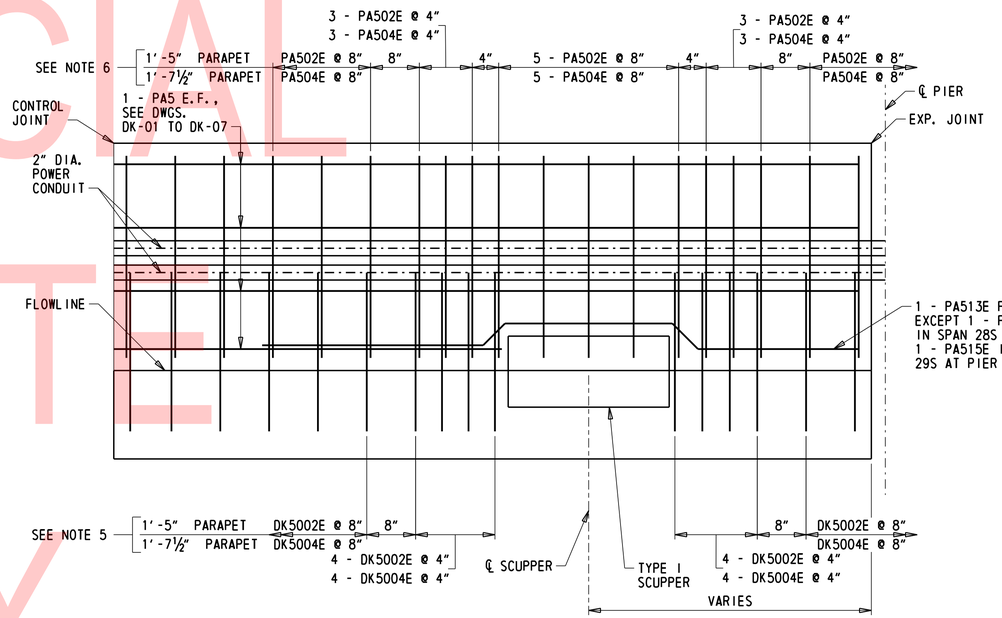

ELEVATION - PARAPET WITH SCUPPER ON BRIDGE

1" = 1'-0"

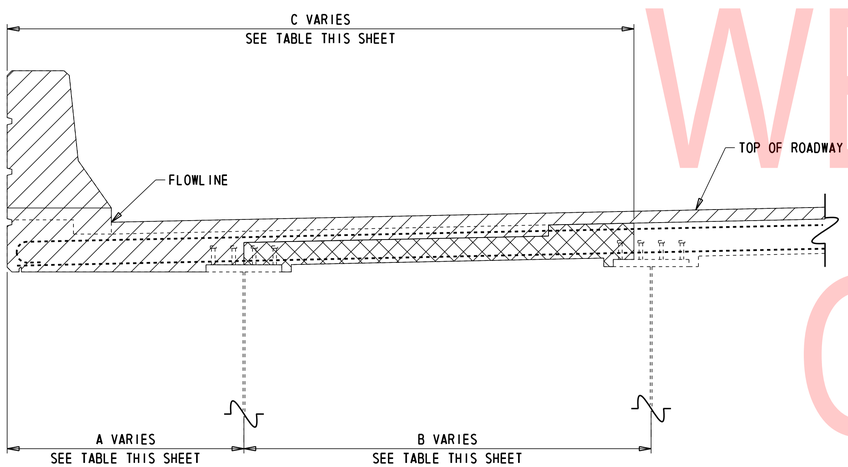

SCUPPER REINFORCEMENT CONCRETE REMOVAL DETAIL

¾" = 1'-0"

LEGEND:

- LIMITS OF OVERHANG AND PARTIAL DECK REMOVAL FOR PARAPET RECONSTRUCTION.
- LIMITS OF ADDITIONAL PARTIAL DECK REMOVAL AROUND PROPOSED TYPE I SCUPPERS.

TYPE I SCUPPER LOCATION TABLE

SPAN	LOCATION	I-95 STA.	'A'	'B'	'C'
27S	PIER 27S	1295+30.91	1'-6⅛"	5'-8"	8'-7⅛"
28S	PIER 28S	1296+03.43	1'-7⅞"	6'-6¼"	7'-9⅜"
29S	PIER 29S	1296+78.11	1'-9½"	4'-1⅜"	8'-3"
29S	PIER 30S	1297+43.95	1'-10½"	5'-7⅞"	8'-8"
30S	PIER 31S	1298+17.79	2'-0"	7'-2"	8'-9⅞"
31S	PIER 32S	1298+91.49	1'-9½"	5'-10⅛"	8'-11¾"
32S	PIER 33S	1299+41.00	1'-8¼"	6'-6¾"	8'-11"
32S	PIER 33S	1299+87.67	1'-8¼"	7'-2½"	8'-10⅞"

NOTES:

1. FOR SCUPPER DETAILS, SEE DWG. DT-02.
2. FOR EACH SHEAR STUD REMOVED, A NEW SHEAR STUD SHALL BE INSTALLED ADJACENT TO THE SCUPPER. PAYMENT FOR REMOVAL OF EXISTING SHEAR STUDS AND INSTALLATION OF NEW SHEAR STUDS WILL BE INCIDENTAL TO ITEM 615000 - STEEL STRUCTURES.
3. SCUPPER CLIP ANGLES NOT SHOWN FOR CLARITY.
4. PAYMENT FOR ADDITIONAL CONCRETE REMOVAL FOR SCUPPER INSTALLATION WILL BE MADE UNDER ITEM 211000 - REMOVAL OF STRUCTURES AND OBSTRUCTIONS.
5. EXISTING BARS TO REMAIN SHALL BE CLEANED IN ACCORDANCE WITH SECTION 628.03(E)7. BARS WITH CORROSION, BROKEN, OR WITH INADEQUATE BOND SHALL BE REPAIRED IN ACCORDANCE WITH SECTION 628.03(E)7. PAYMENT FOR CLEANING WILL BE INCIDENTAL TO ITEM 624000 - PREFABRICATED EXPANSION JOINT SYSTEM, 3".
6. 1'-7½" PARAPET APPLIES TO SPANS 26S TO 28S, SEE DWGS. PA-01 AND PA-03 FOR MORE INFO.

UNOFFICIAL WEBSITE COPY

ADDENDA / REVISIONS

SCALE AS NOTED

REHABILITATION OF I-95, 2ND STREET ON-RAMP IMPROVEMENTS

CONTRACT	BRIDGE NO.	1 748S 059
T201907402	DESIGNED BY: D. NIZAMOFF	
COUNTY		
NEW CASTLE	CHECKED BY: W. GESCHREI	

TYPE I SCUPPER DETAILS

DT-04

SECTION: WRA

SHEET NO. 136

N:\31987-004\Contract_Ramp_D\CADD\Bridge\BR1-748S_SCUPPER2.dgn
8/23/2019 4:32:00 PM

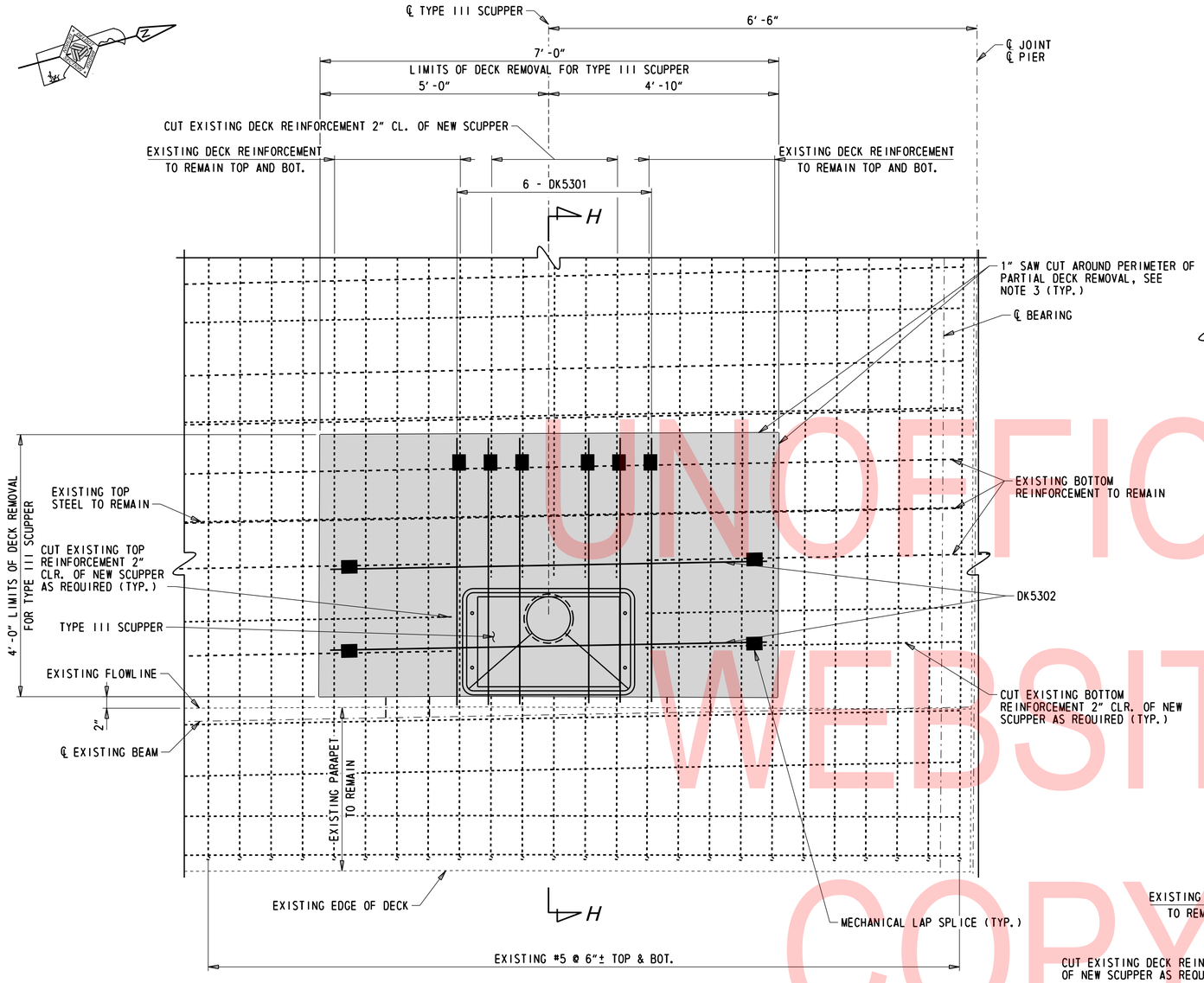

PLAN

1″ = 1′-0″

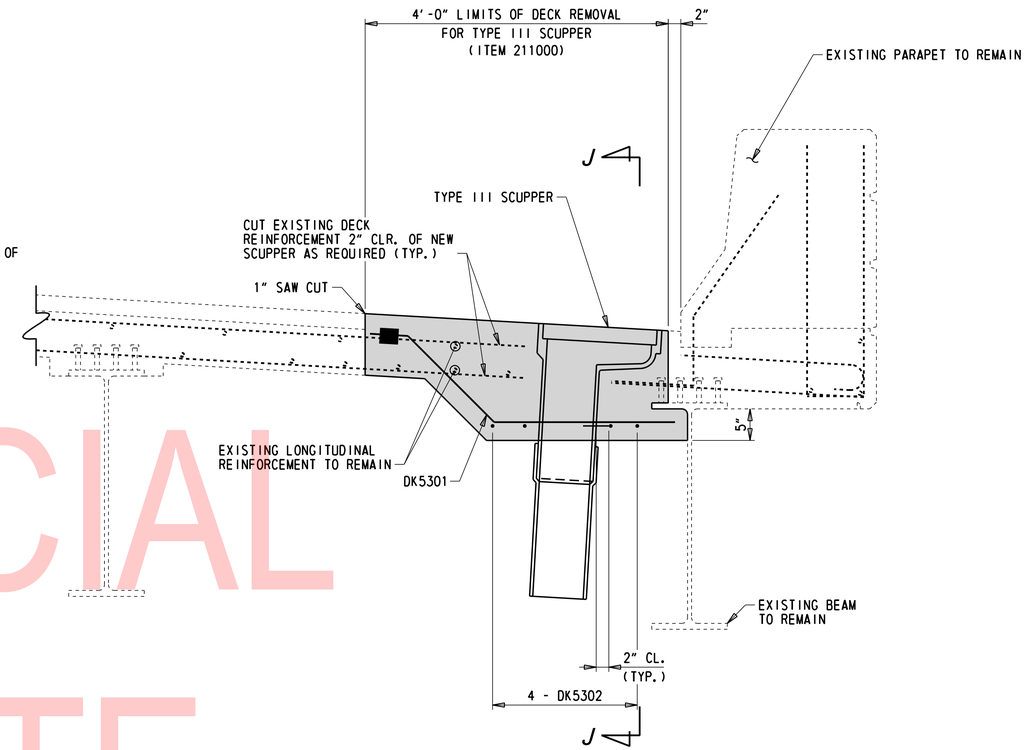

SECTION H-H

1″ = 1′-0″

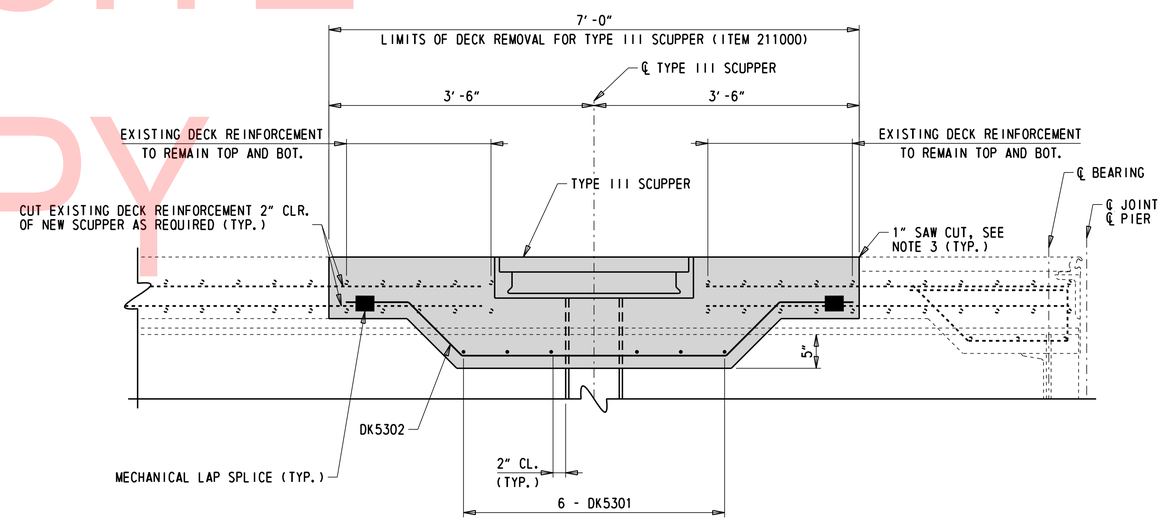

SECTION J-J

1″ = 1′-0″

UNOFFICIAL WEBSITE COPY

LEGEND:

HIGH EARLY STRENGTH CONCRETE (ITEM 610019)

NOTES:

1. FOR TYPE III SCUPPER DETAILS, SEE DWG. DT-03.
2. LOCATION OF EXISTING REINFORCEMENT SHOWN IS BASED ON EXISTING PLANS. ACTUAL LOCATION IN FIELD MAY VARY. SPAN 39S SHOWN; SPANS 37S AND 35S SIMILAR.
3. COST OF 1″ SAW CUT SHALL BE INCIDENTAL TO ITEM 211000 - REMOVAL OF STRUCTURES AND OBSTRUCTIONS.
4. TYPE III SCUPPERS IN SPANS 35S, 37S, AND 39S SHALL BE INSTALLED DURING A WEEKEND LEFT LANE CLOSURE. SEE MAINTENANCE OF TRAFFIC PLANS FOR MORE INFORMATION.
5. PAYMENT FOR DECK REMOVAL AROUND TYPE III SCUPPERS WILL BE INCIDENTAL TO ITEM 21000 - REMOVAL OF STRUCTURES AND OBSTRUCTIONS.

N:\31987-004\Contract_Ramp_D\CADD\Bridge\BR1-748S_SCUPPER_39S.dgn
8/23/2019 4:32:01 PM

ADDENDA / REVISIONS	SCALE AS NOTED	REHABILITATION OF I-95, 2ND STREET ON-RAMP IMPROVEMENTS	CONTRACT T201907402	BRIDGE NO. 1 748S 059	TYPE III SCUPPER DETAILS	DT-05
			COUNTY NEW CASTLE	DESIGNED BY: D. NIZAMOFF		SECTION WRA
				CHECKED BY: W. GESCHREI		SHEET NO. 137

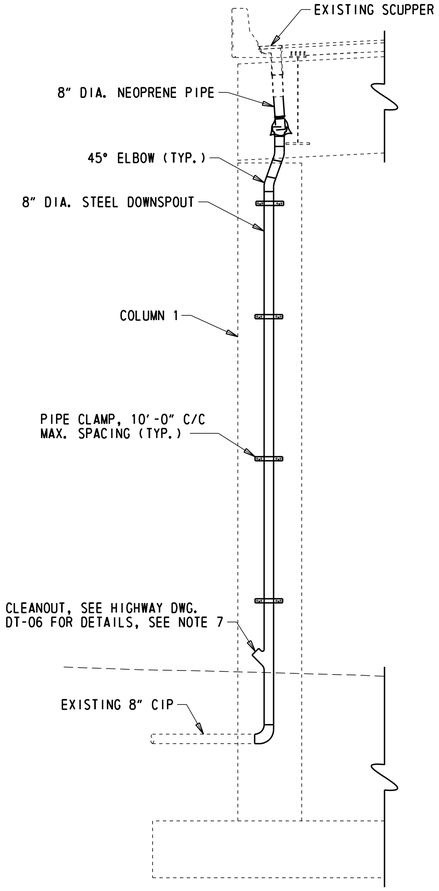

(LOOKING NORTH)

PIER 26S

3/16" = 1'-0"

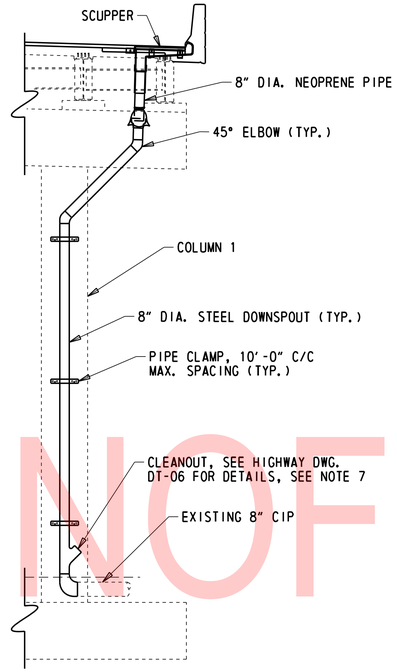

(LOOKING SOUTH)

PIER 28S

3/16" = 1'-0"

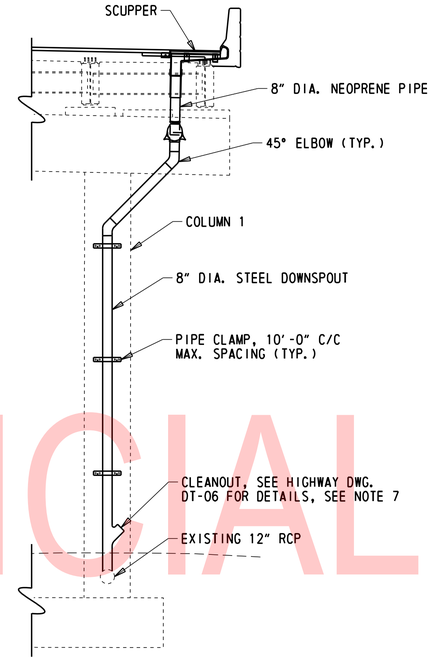

(LOOKING SOUTH)

PIER 29S

3/16" = 1'-0"

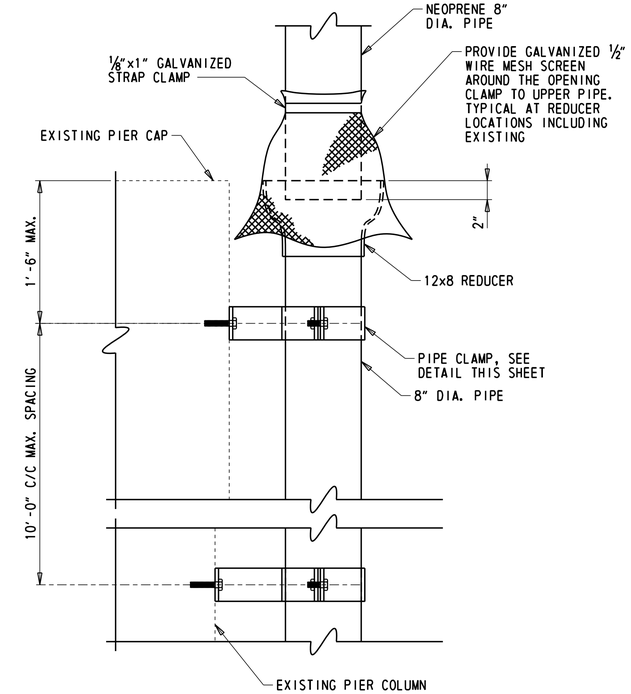

REDUCER DETAIL

1 1/2" = 1'-0"

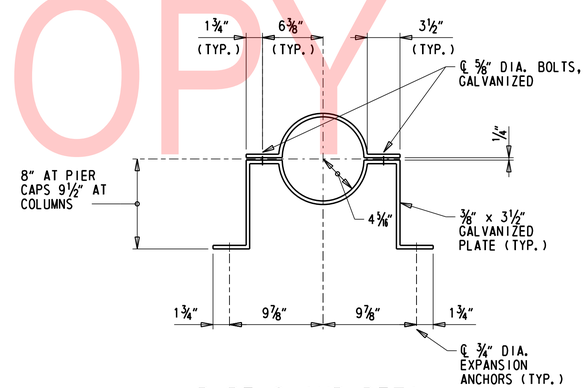

PIPE CLAMP DETAIL

1 1/2" = 1'-0"

NOTES:

1. FOR DRAINAGE REPAIR SCHEDULE AND LOCATIONS SEE DWG. PN-03.
2. STEEL PIPES AND FITTINGS SHALL BE ASTM A53, STANDARD WEIGHT.
3. PIPE HANGERS, CLAMPS, U-BOLTS, AND BOLTS SHALL BE GALVANIZED.
4. ALL DIMENSIONS AND DETAILS SHOWN ARE BASED ON EXISTING AS BUILT DRAWINGS AND SHALL BE VERIFIED IN THE FIELD BY THE CONTRACTOR. CONTRACTOR SHALL SUBMIT FIELD VERIFICATION NOTES AND SKETCHES WITH THE DRAINAGE SHOP DRAWINGS.
5. ALL EXISTING PIPES WHICH ARE TO REMAIN SHALL BE CLEARED OF ALL DEBRIS AND CLOGS. PAYMENT WILL BE MADE UNDER ITEM 601503 - CLEANING BRIDGE SCUPPERS.
6. ALL NEW PIPES AND FITTINGS SHALL BE PAINTED AS INDICATED IN SECTION 616 OF THE STANDARD SPECIFICATIONS. PAYMENT WILL BE INCIDENTAL TO ITEM 615000 - STEEL STRUCTURES.
7. NEW 8" DRAIN PIPE AND FITTINGS SHALL BE IN ACCORDANCE WITH AND PAID FOR UNDER ITEM 615000 - STEEL STRUCTURES. PAYMENT FOR CLEANOUTS WILL BE INCIDENTAL TO ITEM 615000.

UNOFFICIAL WEBSITE COPY

N:\31987-004\Contract_Ramp_D\CADD\Bridge\BRI-748S_DRAINAGE_39S.dgn
8/23/2019 4:32:02 PM

ADDENDA / REVISIONS		SCALE AS NOTED	REHABILITATION OF I-95, 2ND STREET ON-RAMP IMPROVEMENTS	CONTRACT T201907402	BRIDGE NO. 1 748S 059	SCUPPER DOWNSPOUT DETAILS 1 OF 2	DT-06
				COUNTY NEW CASTLE	DESIGNED BY: D. NIZAMOFF		SECTION WRA
					CHECKED BY: W. GESCHREI		SHEET NO. 138

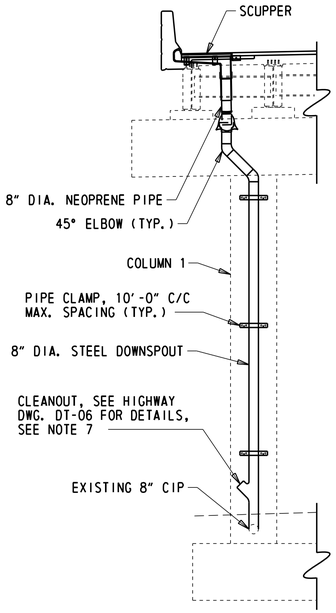

(LOOKING NORTH)

PIER 31S
PIER 30S SIMILAR
3/16" = 1'-0"

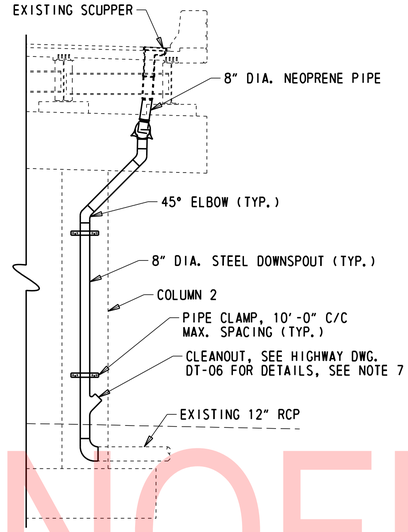

(LOOKING NORTH)

PIER 34S
PIERS 35S, 37S, AND 39S SIMILAR
3/16" = 1'-0"

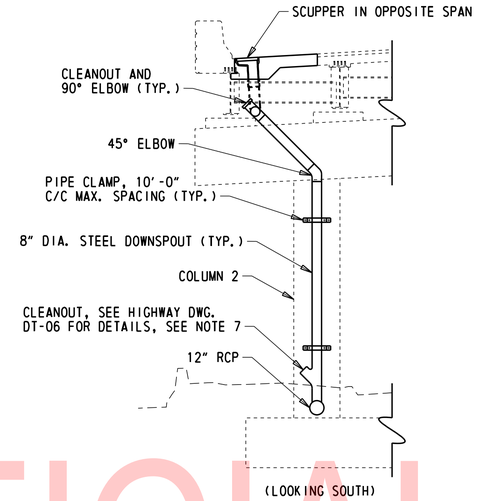

(LOOKING SOUTH)

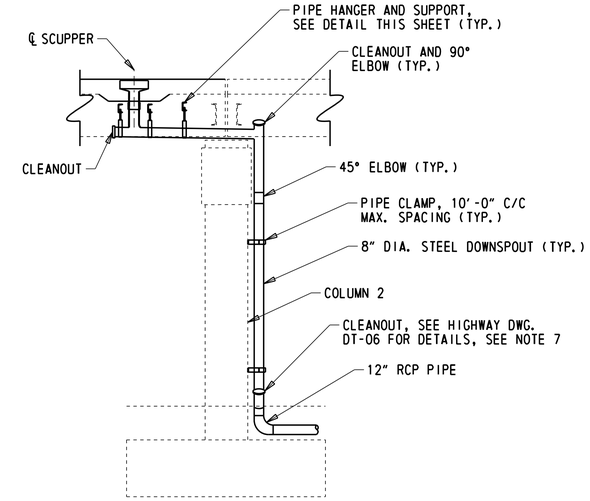

(LOOKING WEST)

PIER 40S
PIERS 36S AND 38S SIMILAR
3/16" = 1'-0"

NOTES:

1. EXISTING SCUPPER SUPPORT SHALL BE REMOVED BY CONTRACTOR. PAYMENT WILL BE INCIDENTAL TO ITEM 211000.
2. FOR 7/8" DIA. BOLTS:
   MIN. BOLT SPACING = 2 5/8"
   MAX. BOLT SPACING = 6"
   MIN. EDGE DISTANCE = 1 1/2"
   MAX. EDGE DISTANCE = 4"
3. SEE DWG. DT-06 FOR ADDITIONAL NOTES.

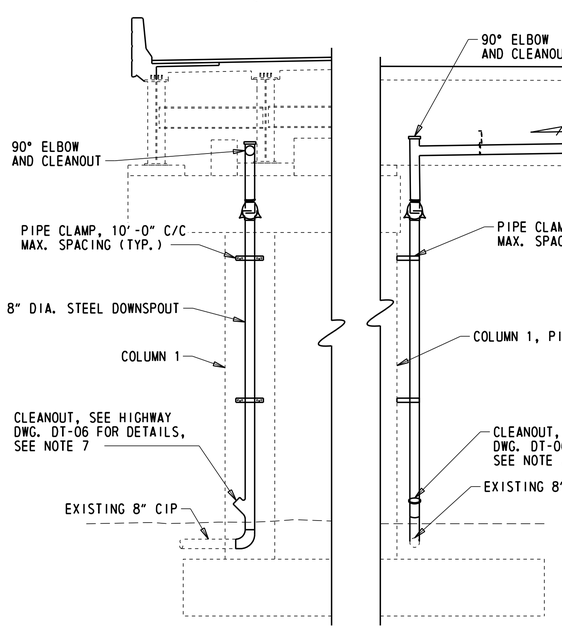

(LOOKING NORTH)

PIER 33S
3/16" = 1'-0"

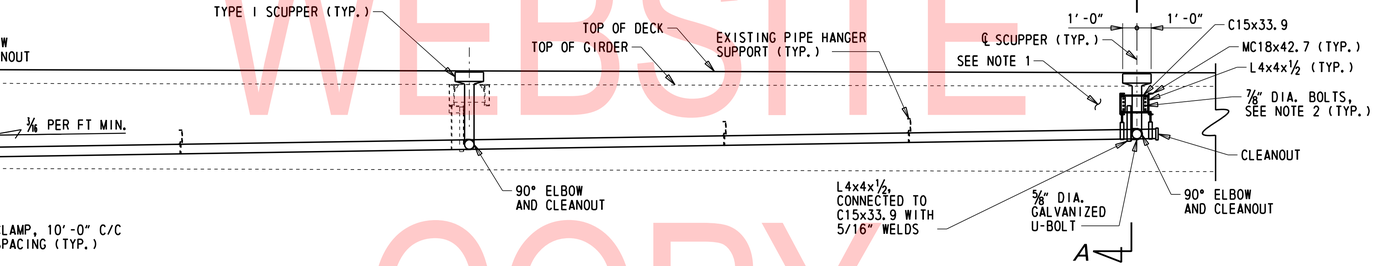

SPAN 32S, BAY 1 (LOOKING EAST)
3/16" = 1'-0"

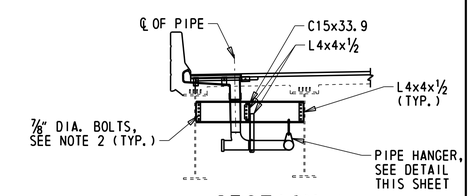

SECTION A-A
3/16" = 1'-0"

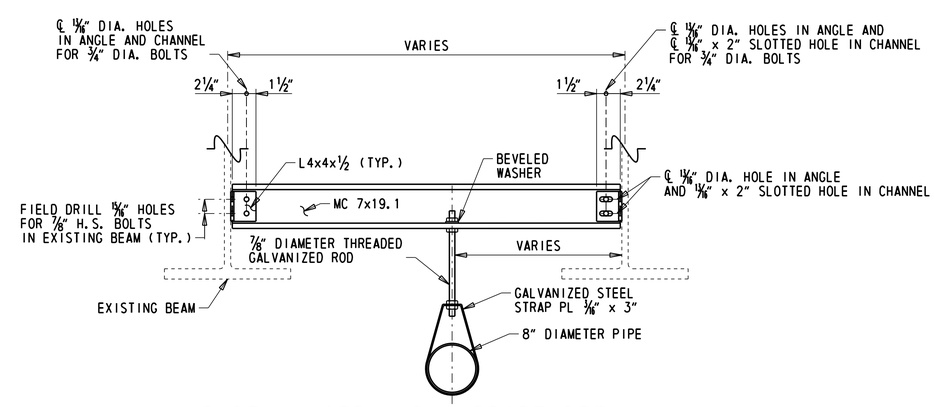

PIPE HANGER AND SUPPORT DETAIL
1" = 1'-0"

UNOFFICIAL WEBSITE COPY

ADDENDA / REVISIONS		SCALE AS NOTED	REHABILITATION OF I-95, 2ND STREET ON-RAMP IMPROVEMENTS	CONTRACT T201907402	BRIDGE NO. 1 748S 059	SCUPPER DOWNSPOUT DETAILS 2 OF 2	DT-07
				COUNTY NEW CASTLE	DESIGNED BY: D. NIZAMOFF		SECTION WRA
					CHECKED BY: W. GESCHREI		SHEET NO. 139

N:\31987-004\Contract_Ramp_D\CADD\Bridge\BRI-748S_DT07.dgn
8/23/2019 4:32:03 PM

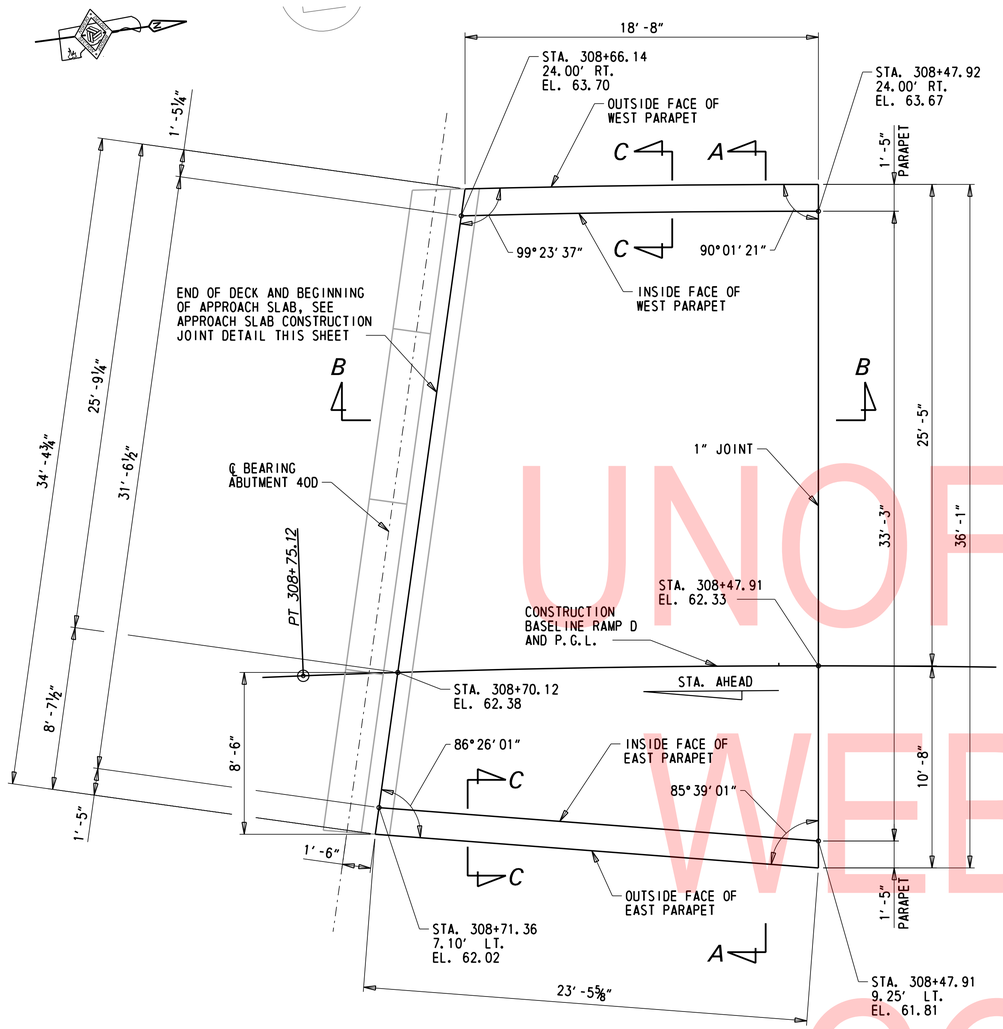

APPROACH SLAB D PLAN

¼" = 1'-0"

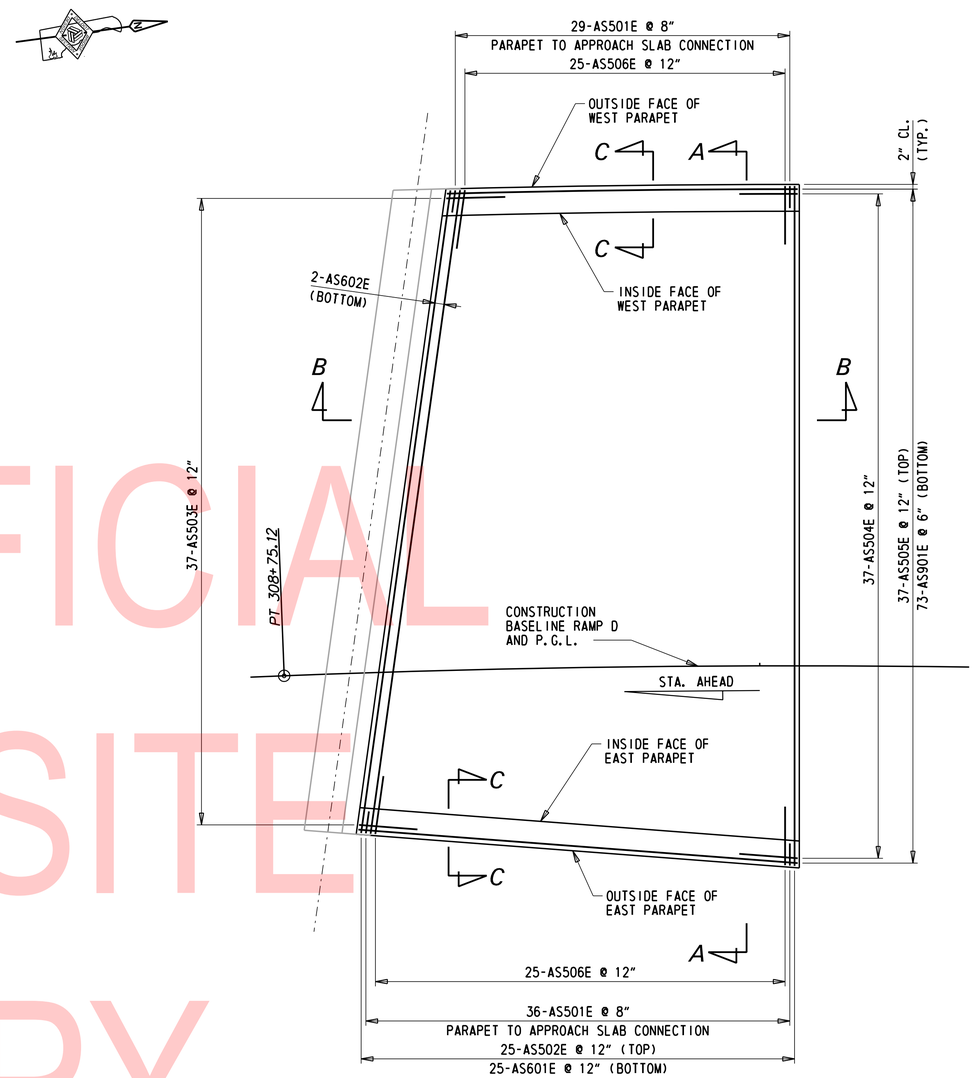

APPROACH SLAB D REINFORCEMENT PLAN

¼" = 1'-0"

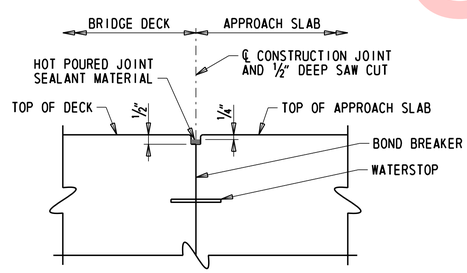

APPROACH SLAB CONSTRUCTION JOINT

NOT TO SCALE

NOTES:

1. FOR APPROACH SLAB D SECTION A-A, SEE DWG. AS-02.
2. FOR APPROACH SLAB D SECTIONS B-B AND C-C, SEE DWG. AS-04.

UNOFFICIAL WEBSITE COPY

N:\31987-004\Contract_Ramp_D\CADD\Bridge\BRI-748S_AS01.dgn
8/23/2019 4:32:05 PM

ADDENDA / REVISIONS	SCALE AS NOTED	REHABILITATION OF I-95, 2ND STREET ON-RAMP IMPROVEMENTS	CONTRACT T201907402	BRIDGE NO. 1 748S 059	ABUTMENT 40D APPROACH SLAB PLAN	AS-01
			COUNTY NEW CASTLE	DESIGNED BY: D. NIZAMOFF		SECTION WRA
				CHECKED BY: W. GESCHREI		SHEET NO. 140

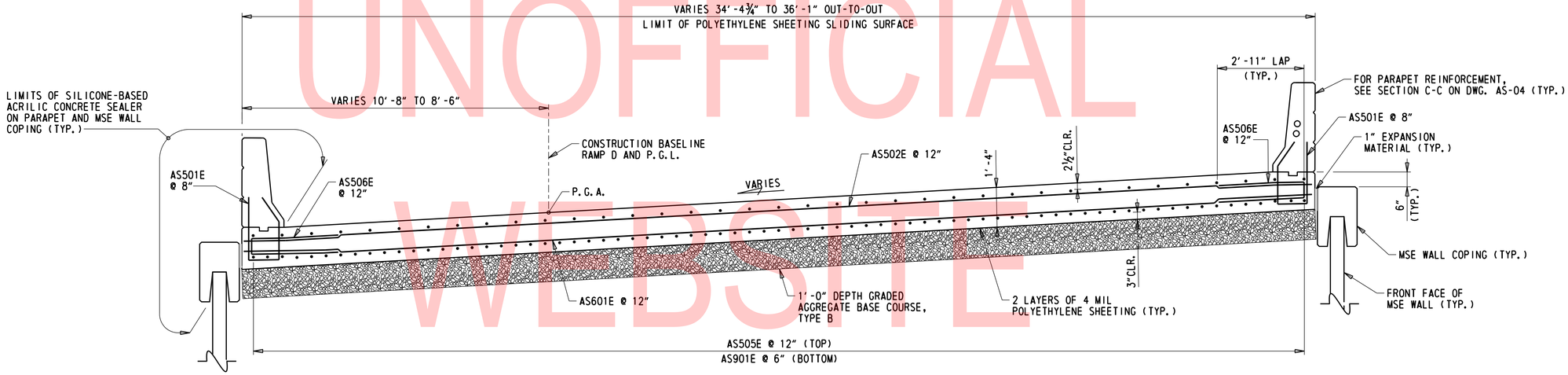

SECTION A-A

½" = 1'-0"

UNOFFICIAL WEBSITE COPY

N:\31987-004\Contract_Ramp_D\CADD\Bridge\BR1-748S_AS02.dgn
8/23/2019 4:32:06 PM

ADDENDA / REVISIONS		SCALE AS NOTED	REHABILITATION OF I-95, 2ND STREET ON-RAMP IMPROVEMENTS	CONTRACT T201907402	BRIDGE NO. 1 748S 059	ABUTMENT 40D APPROACH SLAB SECTION	AS-02 SECTION WRA
				COUNTY NEW CASTLE	DESIGNED BY: D. NIZAMOFF		SHEET NO. 141
					CHECKED BY: W. GESCHREI		

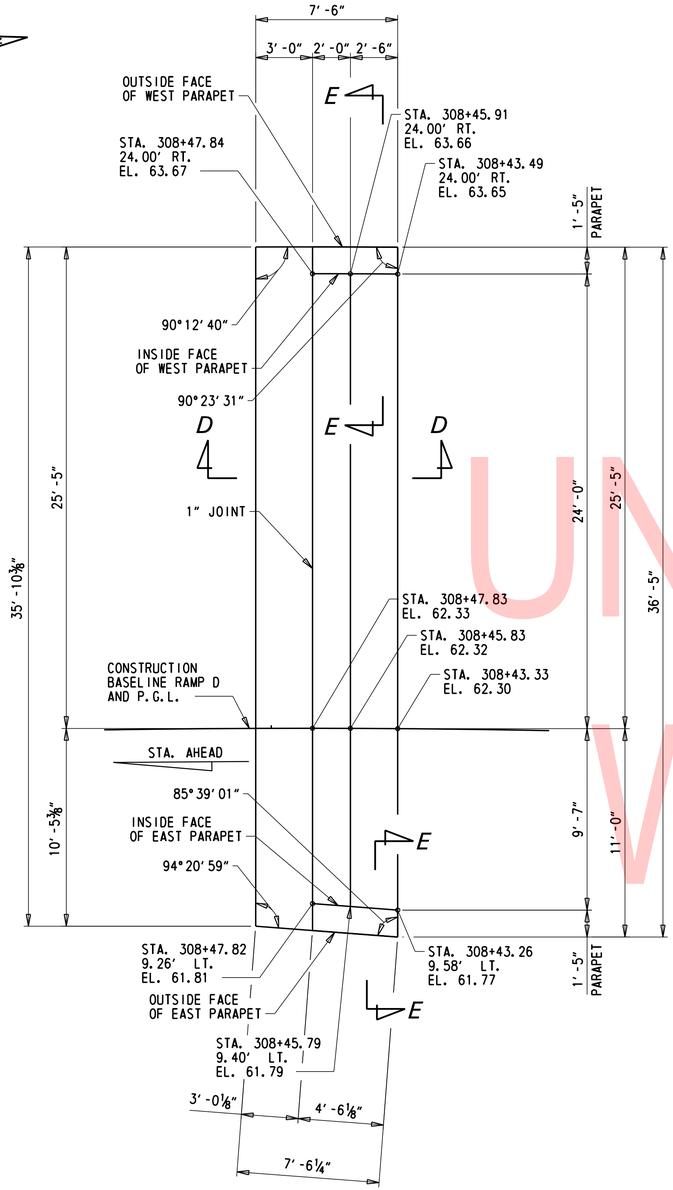

SLEEPER SLAB D PLAN

¼" = 1'-0"

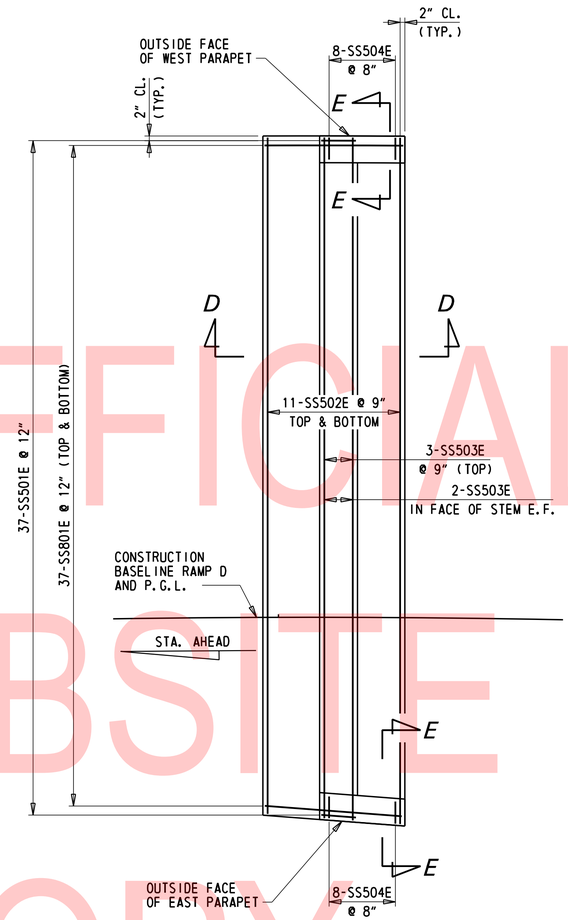

SLEEPER SLAB D REINFORCEMENT PLAN

¼" = 1'-0"

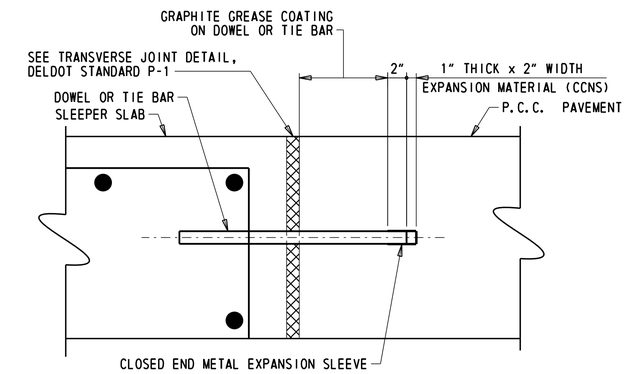

DETAIL A

N.T.S

CCNS = CLOSED CELL NEOPRENE SPONGE

UNOFFICIAL WEBSITE COPY

NOTES:

1. PAYMENT FOR SLEEPER SLAB CONCRETE WILL BE MADE UNDER ITEM 610016 - PORTLAND CEMENT CONCRETE MASONRY, CLASS D.
2. FOR SLEEPER SLAB D SECTIONS D-D AND E-E, SEE DWG. AS-04.

ADDENDA / REVISIONS	SCALE AS NOTED	REHABILITATION OF I-95, 2ND STREET ON-RAMP IMPROVEMENTS	CONTRACT T201907402	BRIDGE NO. 1 748S 059	ABUTMENT 40D SLEEPER SLAB PLAN	AS-03
			COUNTY NEW CASTLE	DESIGNED BY: D. NIZAMOFF		SECTION WRA
				CHECKED BY: W. GESCHREI		SHEET NO. 142

N:\31987-004\Contract_Ramp_D\CADD\Bridge\BRI-748S_AS03.dgn
8/23/2019 4:32:08 PM

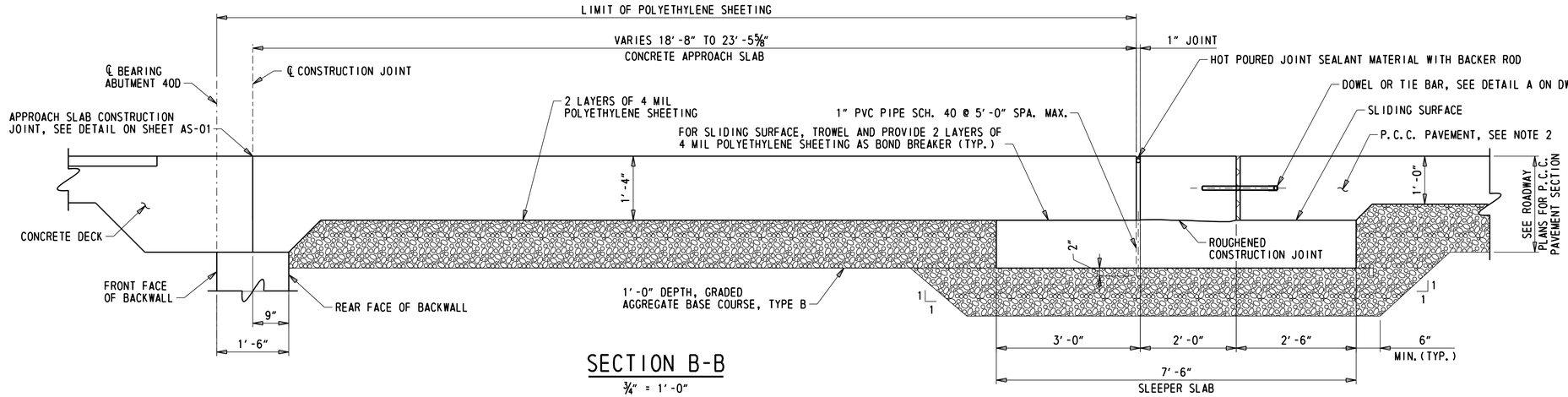

SECTION B-B

¾" = 1'-0"

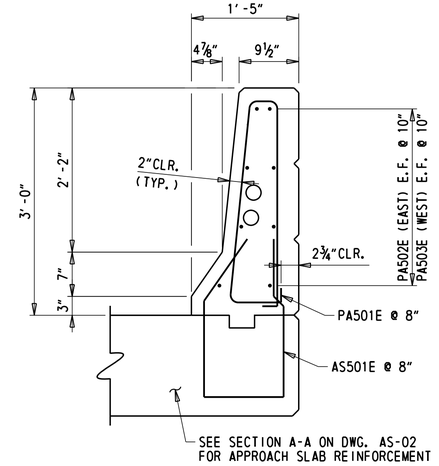

SECTION C-C

1" = 1'-0"

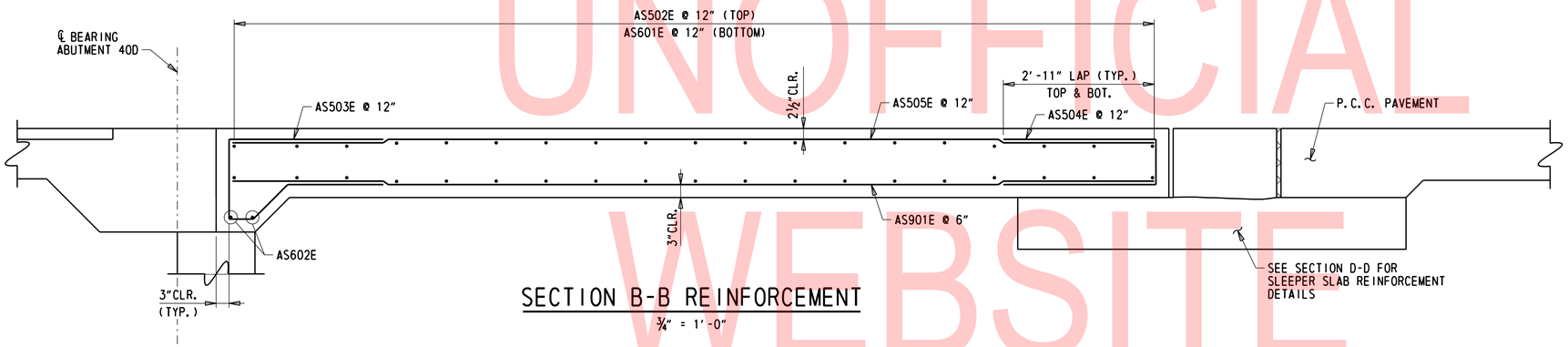

SECTION B-B REINFORCEMENT

¾" = 1'-0"

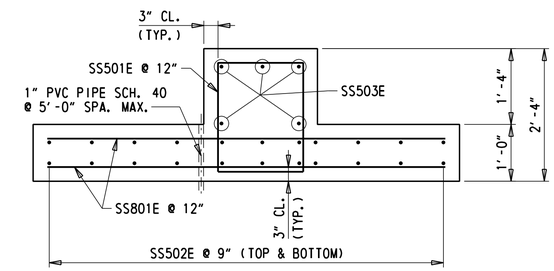

SECTION D-D

¾" = 1'-0"

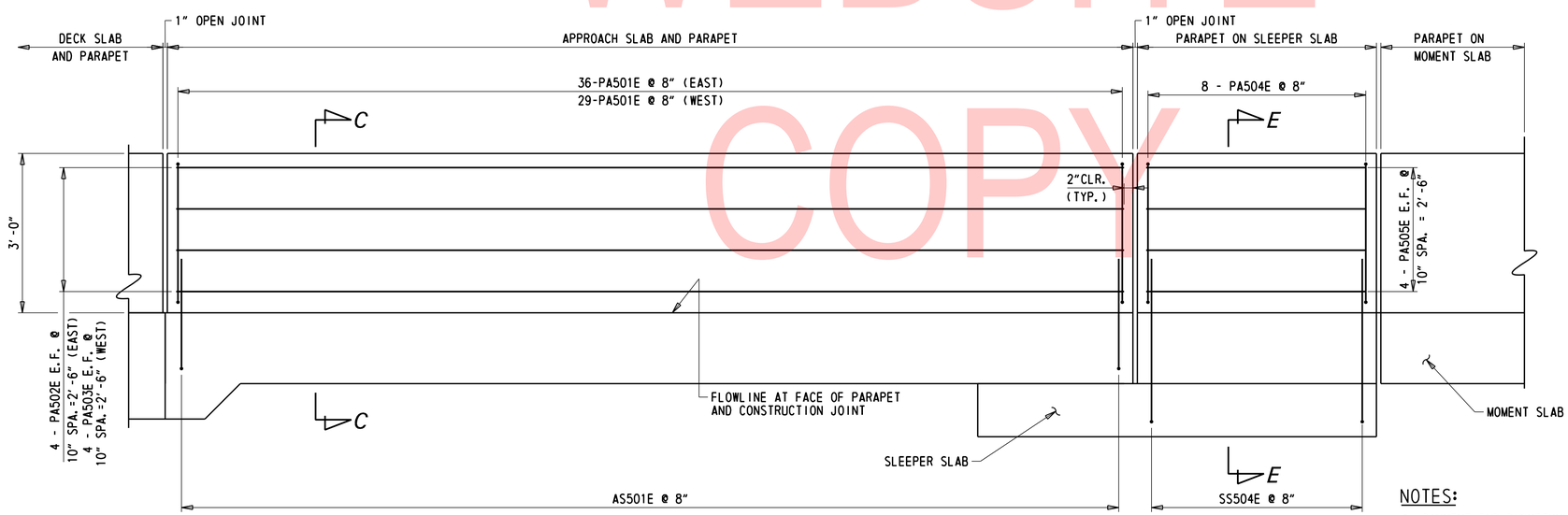

NOTE:
REINFORCEMENT NOT SHOWN IN SLEEPER SLAB AND APPROACH SLAB FOR CLARITY.

APPROACH SLAB PARAPET REINFORCEMENT ELEVATION

¾" = 1'-0"

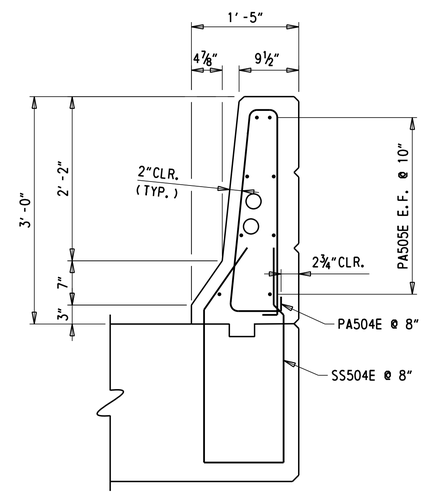

SECTION E-E

1" = 1'-0"

NOTES:

1. PAYMENT FOR POLYETHYLENE SHEETING, BOND BREAKER, WATERSTOP AND HOT POURED JOINT SEALANT WILL BE INCIDENTAL TO ITEM 610018 - PORTLAND CEMENT CONCRETE, APPROACH SLAB, CLASS D.
2. FOR ADDITIONAL ROADWAY PAVEMENT DETAILS, SEE DELDOT STANDARD P-1. PAYMENT FOR ROADWAY JOINTS WILL BE INCIDENTAL TO ROADWAY PAVEMENT ITEM.

UNOFFICIAL WEBSITE COPY

ADDENDA / REVISIONS	SCALE AS NOTED	REHABILITATION OF I-95, 2ND STREET ON-RAMP IMPROVEMENTS	CONTRACT T201907402	BRIDGE NO. 1 748S 059	ABUTMENT 40D APPROACH SLAB DETAILS	AS-04
			COUNTY NEW CASTLE	DESIGNED BY: D. NIZAMOFF		SECTION WRA
				CHECKED BY: W. GESCHREI		SHEET NO. 143

N:\31987-004\Contract_Ramp_DV\CADD\Bridge\BR1-748S_AS04.dgn
8/23/2019 4:32:09 PM

① ANY MARK NUMBER WITH SUFFIX 'E' DENOTES EPOXY COATED REINFORCING STEEL.

② ALL MARK 'LOCATION PREFIXES' SHALL CONSIST OF TWO LETTERS AND ARE AS FOLLOWS: AB = ABUTMENT, AS = APPROACH SLAB, BC = BOX CULVERT, BW = BACKWALL, CL = COLUMN, DK = DECK, DL = DOWEL, FT = FOOTING, HW = HEADWALL, MS = MISC. BARS, PA = PARAPET, PR = PIER, SC = SHEETPILE CAP, SL = SLAB, SS = SLEEPER SLAB, TW = TOEWALL, WL = WALL (UNIQUE LOCATION), WW = WINGWALL

SPECIFICATIONS					BENDING DIMENSIONS (FEET-INCHES /QUARTER INCH)										
QTY.	SIZE	LENGTH	MARK	TYPE	A	B	C	D	E	F/R	G	H	J	K	O
ABUTMENT 40D															
35	5	13-8	BW501E	17		6-6	1-2	6-0							
6•	5	34-0	BW502E	STR	34-0										
		T0			T0										
		34-1			34-1										
			•2 SETS OF 3												
6•	5	9-3	AB501E	17		7-0	2-3								
		T0				T0									
		10-0				7-8	2-3								
			•1 SET OF 6												
6•	5	18-4	AB502E	17		16-1	2-3								
		T0				T0									
		18-11				16-8	2-3								
			•1 SET OF 6												
6	5	13-3	AB503E	17		11-0	2-3								
6	5	33-9	AB504E	STR	33-9										
6	5	34-1	AB505E	STR	34-1										
8	5	7-7 1/1	AB506E	DE05		2-3	3-1 1/1	2-3				2-2	2-2	0-4	3-5
6	5	7-6	AB507E	DE05		2-3	3-0	2-3				2-3	2-3	0-1	3-2
35	5	7-0	AB508E	17		3-10	3-2								
35	5	7-7	FT501	2	0-10	6-9									
35	5	7-7	FT502	2	0-10	6-9									
10•	5	33-4	FT503	STR	33-4										
		T0			T0										
		34-2			34-2										
			•1 SET OF 10												
34	5	8-6	FT504	STR	8-6										
1	5	4-6	FT505	STR	4-6										
1	5	8-7	FT506	STR	8-7										
1	5	8-6 1/1	FT507	STR	8-6 1/1										
2	6	33-4	FT601	STR	33-4										
5•	6	33-6 1/1	FT602	STR	33-6 1/1										
		T0			T0										
		34-0			34-0										
			•1 SET OF 5												
2	6	34-1	FT603	STR	34-1										
31	6	12-6	FT604	17		2-0	8-6	2-0							

SPECIFICATIONS					BENDING DIMENSIONS (FEET-INCHES /QUARTER INCH)										
QTY.	SIZE	LENGTH	MARK	TYPE	A	B	C	D	E	F/R	G	H	J	K	O
1	6	8-6	FT605	17		2-0	4-6	2-0							
1	6	12-7	FT606	17		2-0	8-7	2-0							
1	6	12-6 1/1	FT607	17		2-0	8-6 1/1	2-0							
12	6	8-6	FT608	STR	8-6										
3	6	34-1	FT609	STR	34-1										
3	6	33-5	FT610	STR	33-5										

SPECIFICATIONS					BENDING DIMENSIONS (FEET-INCHES /QUARTER INCH)										
QTY.	SIZE	LENGTH	MARK	TYPE	A	B	C	D	E	F/R	G	H	J	K	O

UNOFFICIAL WEBSITE COPY

ASTM STANDARD ENGLISH REINFORCING BARS				RECOMMENDED END HOOKS, APPLICABLE TO ALL GRADES				STIRRUP AND TIE HOOKS, APPLICABLE TO ALL GRADES		
	NOMINAL DIMENSIONS			180° HOOKS		90° HOOKS		90° HOOK	135° HOOK	
BAR SIZE	DIAMETER (INCHES)	AREA (INCHES²)	WEIGHT (LBS./FT.)	D	A OR G	J	A OR G	D	A OR G	A OR G
3	0.375	0.110	0.376	2¼"	5"	3"	6"	1½"	4"	4"	2½"
4	0.500	0.200	0.668	3"	6"	4"	8"	2"	4½"	4½"	3"
5	0.625	0.310	1.043	3¾"	7"	5"	10"	2½"	6"	5½"	3¾"
6	0.750	0.440	1.502	4½"	8"	6"	1-0"	4½"	1-0"	8"	4½"
7	0.875	0.600	2.044	5¼"	10"	7"	1-2"	5¼"	1-2"	9"	5¼"
8	1.000	0.790	2.670	6"	11"	8"	1-4"	6"	1-4"	10½"	6"
9	1.128	1.000	3.400	9½"	1-3"	11¾"	1-7"				
10	1.270	1.270	4.303	10¾"	1-5"	1-1¼"	1-10"				
11	1.410	1.560	5.313	1-0"	1-7"	1-2¾"	2-0"				
14	1.693	2.250	7.650	1-6¼"	2-3"	1-9¾"	2-7"				
18	2.257	4.000	13.600	2-0"	3-0"	2-4½"	3-5"				

NOTES:

1. FIGURES SHOWN IN CIRCLES REPRESENT BAR BEND TYPES.
2. STANDARD BAR BENDS INCLUDE ONLY THOSE TYPES BELOW, INDICATED AS SUCH.
3. ALL DIMENSIONS OUT-TO-OUT, EXCEPT "A" AND "G" ON STD. 180° AND 135° HOOKS.
4. "J" DIMENSIONS ON 180° HOOKS TO BE SHOWN ONLY WHERE NECESSARY TO RESTRICT HOOK SIZE, OTHERWISE STANDARD 'ACI' HOOKS ARE TO BE USED.
5. WHERE "J" IS NOT SHOWN, "J" WILL BE KEPT EQUAL TO OR LESS THAN "H" ON TYPES 3, 5 AND 22. WHERE "J" CAN EXCEED "H", IT SHALL BE SHOWN.
6. "H" DIMENSIONS OF STIRRUPS TO BE SHOWN AS NEEDED TO FIT WITHIN THE CONCRETE.
7. UNLESS OTHERWISE NOTED, DIAMETER "D" IS THE SAME FOR ALL BENDS AND HOOKS ON A BAR (EXCEPT FOR BEND TYPES 11 AND 13).
8. WHERE SLOPE DIFFERS FROM 45° OFFSET, "H" AND "K" MUST BE SHOWN.
9. WHERE BARS ARE TO BE BENT MORE ACCURATELY THAN STANDARD BENDING TOLERANCES, BENDING DIMENSIONS REQUIRING CLOSER FABRICATION SHOULD HAVE LIMITS INDICATED.
10. FOR RECOMMENDED DIAMETER "D", OF BENDS, HOOKS, ETC., REFER TO TABLE ABOVE, 'CRSI' OR 'ACI' TABLES WHERE APPLICABLE AND REQUIRED.
11. TYPE S1-S6, S11, T1-T3 AND T6-T9 APPLICABLE TO BAR SIZES #3 THROUGH #8.

STANDARD BAR BENDS

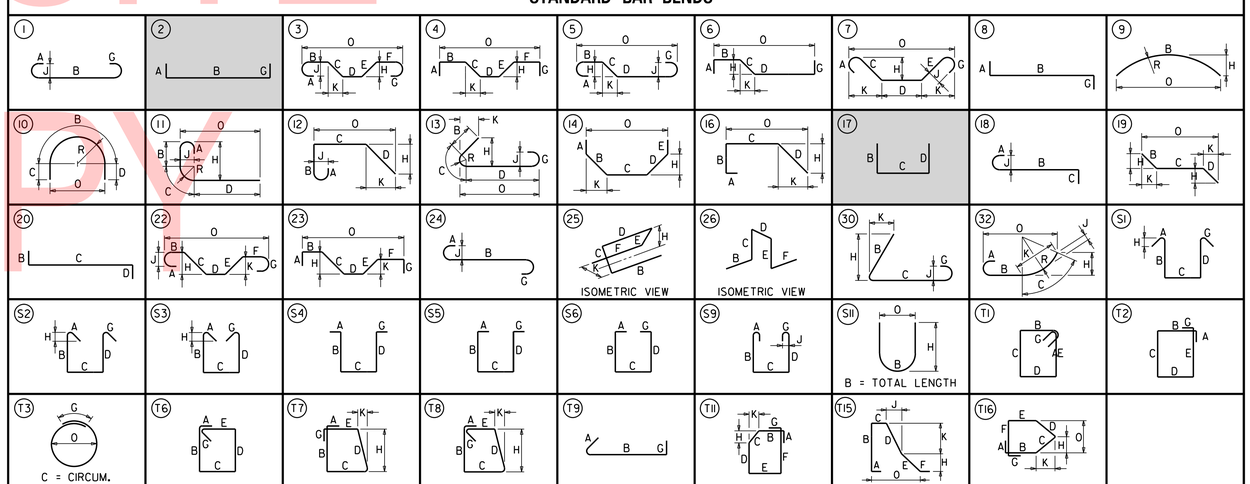

SPECIAL BAR BENDS

STIRRUP AND TIE HOOKS

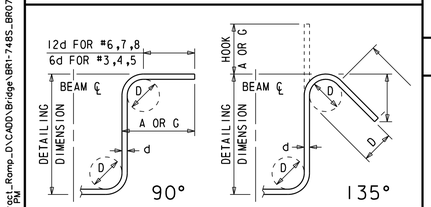

180° AND 90° END HOOKS

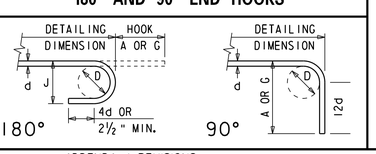

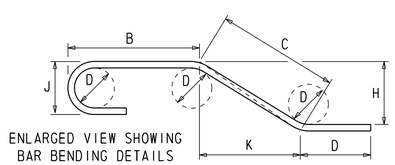

ENLARGED VIEW SHOWING BAR BENDING DETAILS

ADDENDA / REVISIONS

SCALE AS NOTED

REHABILITATION OF I-95, 2ND STREET ON-RAMP IMPROVEMENTS

CONTRACT	BRIDGE NO.	1 748S 059
T201907402	DESIGNED BY: D. NIZAMOFF	
COUNTY		
NEW CASTLE	CHECKED BY: W. GESCHREI	

REINFORCEMENT SCHEDULE SUBSTRUCTURE

BR-01

SECTION: WRA

SHEET NO. 144

N:\31987-004\Contract_Ramp_D\CADD\Bridge\BR1-748S_BR07.dgn
8/23/2019 4:32:10 PM

(1) ANY MARK NUMBER WITH SUFFIX 'E' DENOTES EPOXY COATED REINFORCING STEEL.

(2) ALL MARK 'LOCATION PREFIXES' SHALL CONSIST OF TWO LETTERS AND ARE AS FOLLOWS: AB = ABUTMENT, AS = APPROACH SLAB, BC = BOX CULVERT, BW = BACKWALL, CL = COLUMN, DK = DECK, DL = DOWEL, FT = FOOTING, HW = HEADWALL, MS = MISC. BARS, PA = PARAPET, PR = PIER, SC = SHEETPILE CAP, SL = SLAB, SS = SLEEPER SLAB, TW = TOEWALL, WL = WALL (UNIQUE LOCATION), WW = WINGWALL

SPECIFICATIONS					BENDING DIMENSIONS (FEET-INCHES /QUARTER INCH)										
QTY.	SIZE	LENGTH	MARK	TYPE	A	B	C	D	E	F/R	G	H	J	K	O
PIER 34D															
18	8	15-2	FT801E	2	1-4	12-6					1-4				
16	8	19-8	FT802E	2	1-4	17-0					1-4				
8	6	12-6	FT603E	STR		12-6									
4	6	17-0	FT604E	STR		17-0									
64	5	4-3	FT505E	2	0-10	3-5									
10	5	12-6	FT506E	STR		12-6									
10	5	17-0	FT507E	STR		17-0									
14	8	17-0	FT808E	STR		17-0									
18	8	12-6	FT809E	STR		12-6									
20	11	15-3	DL1101E	2	2-0	13-3									
20	11	26-1	PR1101E	1	1-7	24-6							1-2		
22	5	11-7	PR502E	T1	0-5	2-8	2-8	2-8	2-8		0-5				
8	8	10-1	PR803E	STR		10-1									
32	5	13-1	PR504E	T1	0-5	2-6	3-7	2-6	3-7		0-5				
10	6	17-9 1	PR605E	17		7-4	2-11	7-5							
5	8	12-2	PR806E	2	1-4	9-6					1-4				
5	8	12-3	PR807E	2	1-4	9-7					1-4				
10	5	6-8	PR508E	17		2-0 1	2-8	2-0 1							
6	5	7-1	PR509E	17		1-11	3-2	1-11							

SPECIFICATIONS					BENDING DIMENSIONS (FEET-INCHES /QUARTER INCH)										
QTY.	SIZE	LENGTH	MARK	TYPE	A	B	C	D	E	F/R	G	H	J	K	O
PIER 35D															
18	8	18-2	FT811E	2	1-4	15-6					1-4				
17	8	18-2	FT812E	2	1-4	15-6					1-4				
6	6	15-6	FT613E	STR		15-6									
4	6	15-6	FT614E	STR		15-6									
68	5	4-3	FT515E	2	0-10	3-5									
10	5	15-6	FT516E	STR		15-6									
10	5	15-6	FT517E	STR		15-6									
17	8	15-6	FT818E	STR		15-6									
17	8	15-6	FT819E	STR		15-6									
20	11	15-3	DL1111E	2	2-0	13-3									
10	5	6-8	PR508E	17		2-0 1	2-8	2-0 1							
6	5	7-1	PR509E	17		1-11	3-2	1-11							
20	11	23-8	PR1111E	1	1-7	22-1							1-2		
20	5	11-7	PR512E	T1	0-5	2-8	2-8	2-8	2-8		0-5				
8	8	10-1	PR813E	STR		10-1									
32	5	13-1	PR514E	T1	0-5	2-6	3-7	2-6	3-7		0-5				
10	6	17-9 1	PR615E	17		7-4	2-11	7-5							
5	8	12-2	PR816E	2	1-4	9-6					1-4				
5	8	12-7	PR817E	2	1-4	9-11					1-4				

SPECIFICATIONS					BENDING DIMENSIONS (FEET-INCHES /QUARTER INCH)										
QTY.	SIZE	LENGTH	MARK	TYPE	A	B	C	D	E	F/R	G	H	J	K	O
PIER 36D															
16	8	16-2	FT821E	2	1-4	13-6					1-4				
16	8	16-2	FT822E	2	1-4	13-6					1-4				
6	6	13-6	FT623E	STR		13-6									
4	6	13-6	FT624E	STR		13-6									
60	5	4-3	FT525E	2	0-10	3-5									
10	5	13-6	FT526E	STR		13-6									
10	5	13-6	FT527E	STR		13-6									
15	8	13-6	FT828E	STR		13-6									
15	8	13-6	FT829E	STR		13-6									
20	11	15-3	DL1121E	2	2-0	13-3									
10	5	6-8	PR508E	17		2-0 1	2-8	2-0 1							
6	5	7-1	PR509E	17		1-11	3-2	1-11							
20	11	22-0	PR1121E	1	1-7	20-5							1-2		
18	5	11-7	PR522E	T1	0-5	2-8	2-8	2-8	2-8		0-5				
8	8	10-1	PR823E	STR		10-1									
32	5	13-1	PR524E	T1	0-5	2-6	3-7	2-6	3-7		0-5				
10	6	17-9 1	PR625E	17		7-4	2-11	7-5							
5	8	12-2	PR826E	2	1-4	9-6					1-4				
5	8	12-7	PR827E	2	1-4	9-11					1-4				
2	4	12-5	PR458E	T1	0-4	2-8	3-2	2-8	3-2		0-4				

UNOFFICIAL WEBSITE COPY

ASTM STANDARD ENGLISH REINFORCING BARS

BAR SIZE	NOMINAL DIMENSIONS: DIAMETER (INCHES)	AREA (INCHES²)	WEIGHT (LBS./FT.)	RECOMMENDED END HOOKS, APPLICABLE TO ALL GRADES: 180° HOOKS D	180° HOOKS A OR G	180° HOOKS J	90° HOOKS A OR G	STIRRUP AND TIE HOOKS, APPLICABLE TO ALL GRADES: 90° HOOK D	90° HOOK A OR G	135° HOOK A OR G	135° HOOK A OR G
3	0.375	0.110	0.376	2¼"	5"	3"	6"	1½"	4"	4"	2½"
4	0.500	0.200	0.668	3"	6"	4"	8"	2"	4½"	4½"	3"
5	0.625	0.310	1.043	3¾"	7"	5"	10"	2½"	6"	5½"	3¾"
6	0.750	0.440	1.502	4½"	8"	6"	1-0"	4½"	1-0"	8"	4½"
7	0.875	0.600	2.044	5¼"	10"	7"	1-2"	5¼"	1-2"	9"	5¼"
8	1.000	0.790	2.670	6"	11"	8"	1-4"	6"	1-4"	10½"	6"
9	1.128	1.000	3.400	9½"	1-3"	11¾"	1-7"				
10	1.270	1.270	4.303	10¾"	1-5"	1-1¼"	1-10"				
11	1.410	1.560	5.313	1-0"	1-7"	1-2¾"	2-0"				
14	1.693	2.250	7.650	1-6¼"	2-3"	1-9¾"	2-7"				
18	2.257	4.000	13.600	2-0"	3-0"	2-4½"	3-5"				

NOTES:

1. FIGURES SHOWN IN CIRCLES REPRESENT BAR BEND TYPES.
2. STANDARD BAR BENDS INCLUDE ONLY THOSE TYPES BELOW, INDICATED AS SUCH.
3. ALL DIMENSIONS OUT-TO-OUT, EXCEPT "A" AND "G" ON STD. 180° AND 135° HOOKS.
4. "J" DIMENSIONS ON 180° HOOKS TO BE SHOWN ONLY WHERE NECESSARY TO RESTRICT HOOK SIZE, OTHERWISE STANDARD 'ACI' HOOKS ARE TO BE USED.
5. WHERE "J" IS NOT SHOWN, "J" WILL BE KEPT EQUAL TO OR LESS THAN "H" ON TYPES 3, 5 AND 22. WHERE "J" CAN EXCEED "H", IT SHALL BE SHOWN.
6. "H" DIMENSIONS OF STIRRUPS TO BE SHOWN AS NEEDED TO FIT WITHIN THE CONCRETE.
7. UNLESS OTHERWISE NOTED, DIAMETER "D" IS THE SAME FOR ALL BENDS AND HOOKS ON A BAR (EXCEPT FOR BEND TYPES 11 AND 13).
8. WHERE SLOPE DIFFERS FROM 45° OFFSET, "H" AND "K" MUST BE SHOWN.
9. WHERE BARS ARE TO BE BENT MORE ACCURATELY THAN STANDARD BENDING TOLERANCES, BENDING DIMENSIONS REQUIRING CLOSER FABRICATION SHOULD HAVE LIMITS INDICATED.
10. FOR RECOMMENDED DIAMETER "D", OF BENDS, HOOKS, ETC., REFER TO TABLE ABOVE, 'CRSI' OR 'ACI' TABLES WHERE APPLICABLE AND REQUIRED.
11. TYPE S1-S6, S11, T1-T3 AND T6-T9 APPLICABLE TO BAR SIZES #3 THROUGH #8.

STANDARD BAR BENDS

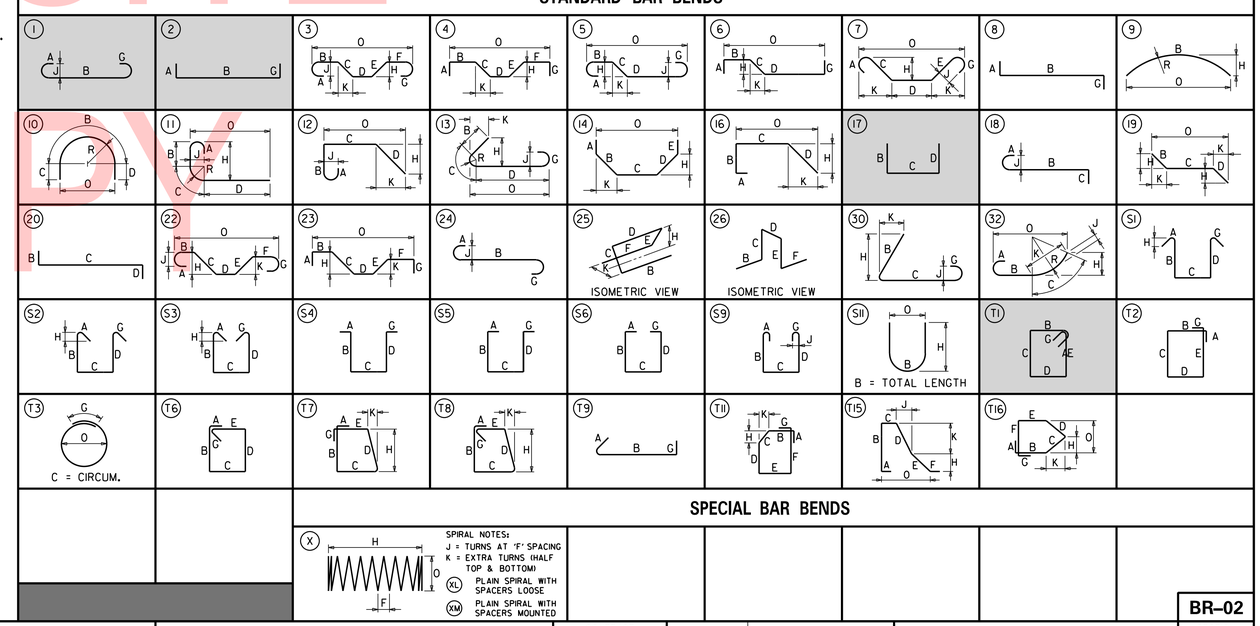

SPECIAL BAR BENDS

STIRRUP AND TIE HOOKS

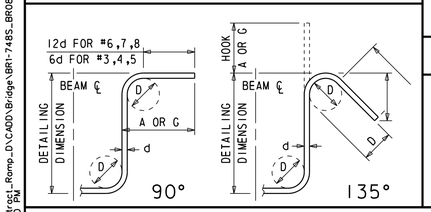

180° AND 90° END HOOKS

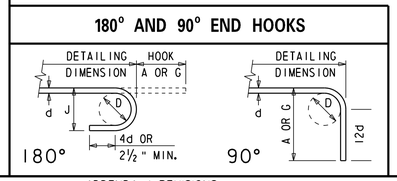

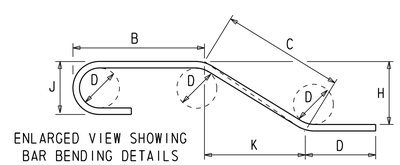

ENLARGED VIEW SHOWING BAR BENDING DETAILS

ADDENDA / REVISIONS

SCALE AS NOTED

REHABILITATION OF I-95, 2ND STREET ON-RAMP IMPROVEMENTS

CONTRACT	BRIDGE NO. 1 748S 059	REINFORCEMENT SCHEDULE SUBSTRUCTURE	BR-02
T201907402	DESIGNED BY: D. NIZAMOFF		SECTION WRA
COUNTY NEW CASTLE	CHECKED BY: W. GESCHREI		SHEET NO. 145

N:\31987-004\Contract_Ramp_D\CADD\Bridge\BR1-748S_BR08.dgn 8/23/2019 4:32:10 PM

① ANY MARK NUMBER WITH SUFFIX 'E' DENOTES EPOXY COATED REINFORCING STEEL.

② ALL MARK 'LOCATION PREFIXES' SHALL CONSIST OF TWO LETTERS AND ARE AS FOLLOWS: AB = ABUTMENT, AS = APPROACH SLAB, BC = BOX CULVERT, BW = BACKWALL, CL = COLUMN, DK = DECK, DL = DOWEL, FT = FOOTING, HW = HEADWALL, MS = MISC. BARS, PA = PARAPET, PR = PIER, SC = SHEETPILE CAP, SL = SLAB, SS = SLEEPER SLAB, TW = TOEWALL, WL = WALL (UNIQUE LOCATION), WW = WINGWALL

SPECIFICATIONS					BENDING DIMENSIONS (FEET-INCHES /QUARTER INCH)										
QTY.	SIZE	LENGTH	MARK	TYPE	A	B	C	D	E	F/R	G	H	J	K	O
PIER 37D															
16	8	16-2	FT831E	2	1-4	13-6					1-4				
16	8	16-2	FT832E	2	1-4	13-6					1-4				
6	6	13-6	FT633E	STR		13-6									
4	6	13-6	FT634E	STR		13-6									
60	5	4-3	FT535E	2	0-10	3-5									
10	5	13-6	FT536E	STR		13-6									
10	5	13-6	FT537E	STR		13-6									
15	8	13-6	FT838E	STR		13-6									
15	8	13-6	FT839E	STR		13-6									
20	11	15-3	DL1131E	2	2-0	13-3									
10	5	6-8	PR508E	17		2-0 1/4	2-8	2-0 1/4							
6	5	7-1	PR509E	17		1-11	3-2	1-11							
20	11	21-3	PR1131E	1	1-7	19-8							1-2		
18	5	11-7	PR532E	T1	0-5	2-8	2-8	2-8	2-8		0-5				
8	8	10-7	PR833E	STR		10-7									
34	5	13-1	PR534E	T1	0-5	2-6	3-7	2-6	3-7		0-5				
10	6	18-2	PR635E	17		7-7	2-11	7-7							
5	8	12-8	PR836E	2	1-4	10-0					1-4				
5	8	13-1	PR837E	2	1-4	10-5					1-4				

SPECIFICATIONS					BENDING DIMENSIONS (FEET-INCHES /QUARTER INCH)										
QTY.	SIZE	LENGTH	MARK	TYPE	A	B	C	D	E	F/R	G	H	J	K	O
PIER 38D															
20	8	16-2	FT841E	2	1-4	13-6					1-4				
16	8	19-8	FT842E	2	1-4	17-0					1-4				
6	6	13-6	FT643E	STR		13-6									
4	6	17-0	FT644E	STR		17-0									
70	5	4-3	FT545E	2	0-10	3-5									
10	5	13-6	FT546E	STR		13-6									
10	5	17-0	FT547E	STR		17-0									
15	8	17-0	FT848E	STR		17-0									
20	8	13-6	FT849E	STR		13-6									
24	11	15-3	DL1141E	2	2-0	13-3									
24	11	21-4	PR1141E	1	1-7	19-9							1-2		
18	5	11-7	PR542E	T1	0-5	2-8	2-8	2-8	2-8		0-5				
8	8	16-1	PR843E	STR		16-1									
48	5	13-1	PR544E	T1	0-5	2-6	3-7	2-6	3-7		0-5				
10	7	25-2	PR845E	17		11-1	2-11	11-1							
5	9	18-10	PR1046E	2	1-10	15-5					1-7				
5	9	19-4	PR1047E	2	1-10	15-11					1-7				
25	5	5-8	PR548E	17		2-3 1/4	1-2	2-3 1/4							
10	5	7-7	PR549E	17		2-2	3-2	2-2							
2	4	9-5	PR459E	T1	0-4	1-2	3-2	1-2	3-2		0-4				

SPECIFICATIONS					BENDING DIMENSIONS (FEET-INCHES /QUARTER INCH)										
QTY.	SIZE	LENGTH	MARK	TYPE	A	B	C	D	E	F/R	G	H	J	K	O
PIER 39D															
28	10	17-2	FT1051E	2	1-10	13-6					1-10				
20	10	26-8	FT1052E	2	1-10	23-0					1-10				
8	6	13-6	FT653E	STR		13-6									
6	6	23-0	FT654E	STR		23-0									
88	5	4-3	FT555E	2	0-10	3-5									
10	5	13-6	FT556E	STR		13-6									
10	5	23-0	FT557E	STR		23-0									
18	8	23-0	FT858E	STR		23-0									
26	8	13-6	FT859E	STR		13-6									
40	11	15-3	DL1151E	2	2-0	13-3									
35	5	5-8	PR548E	17		2-3 1/4	1-2	2-3 1/4							
14	5	7-7	PR549E	17		2-2	3-2	2-2							
40	11	21-1	PR1151E	1	1-7	19-6							1-2		
36	5	11-7	PR552E	T1	0-5	2-8	2-8	2-8	2-8		0-5				
9	10	23-4	PR1053E	STR		23-4									
72	5	13-1	PR554E	T1	0-5	2-6	3-7	2-6	3-7		0-5				
10	7	31-8	PR755E	17		14-4	2-11	14-4							
5	9	25-11	PR956E	2	1-7	22-9					1-7				
5	9	26-4 1/4	PR957E	2	1-7	23-2 1/4					1-7				
3	4	9-5	PR459E	T1	0-4	1-2	3-2	1-2	3-2		0-4				
PIER 33S															
4	5	7-4	PR560E	17		3-0	1-3	3-0							
10	5	8-7	PR561E	17		3-0	2-6	3-0							
4	4	8-8	PR462E	T1	0-4	2-8	1-3	2-8	1-3		0-4				

UNOFFICIAL WEBSITE COPY

ASTM STANDARD ENGLISH REINFORCING BARS

BAR SIZE	NOMINAL DIMENSIONS: DIAMETER (INCHES)	AREA (INCHES²)	WEIGHT (LBS./FT.)	RECOMMENDED END HOOKS, APPLICABLE TO ALL GRADES: 180° HOOKS D	180° HOOKS A OR G	180° HOOKS J	90° HOOKS A OR G	STIRRUP AND TIE HOOKS, APPLICABLE TO ALL GRADES: 90° HOOK D	90° HOOK A OR G	135° HOOK A OR G	135° HOOK A OR G
3	0.375	0.110	0.376	2¼"	5"	3"	6"	1½"	4"	4"	2½"
4	0.500	0.200	0.668	3"	6"	4"	8"	2"	4½"	4½"	3"
5	0.625	0.310	1.043	3¾"	7"	5"	10"	2½"	6"	5½"	3¾"
6	0.750	0.440	1.502	4½"	8"	6"	1-0"	4½"	1-0"	8"	4½"
7	0.875	0.600	2.044	5¼"	10"	7"	1-2"	5¼"	1-2"	9"	5¼"
8	1.000	0.790	2.670	6"	11"	8"	1-4"	6"	1-4"	10½"	6"
9	1.128	1.000	3.400	9½"	1-3"	11¾"	1-7"				
10	1.270	1.270	4.303	10¾"	1-5"	1-1¼"	1-10"				
11	1.410	1.560	5.313	1-0"	1-7"	1-2¾"	2-0"				
14	1.693	2.250	7.650	1-6¼"	2-3"	1-9¾"	2-7"				
18	2.257	4.000	13.600	2-0"	3-0"	2-4½"	3-5"				

NOTES:

1. FIGURES SHOWN IN CIRCLES REPRESENT BAR BEND TYPES.
2. STANDARD BAR BENDS INCLUDE ONLY THOSE TYPES BELOW, INDICATED AS SUCH.
3. ALL DIMENSIONS OUT-TO-OUT, EXCEPT "A" AND "G" ON STD. 180° AND 135° HOOKS.
4. "J" DIMENSIONS ON 180° HOOKS TO BE SHOWN ONLY WHERE NECESSARY TO RESTRICT HOOK SIZE, OTHERWISE STANDARD 'ACI' HOOKS ARE TO BE USED.
5. WHERE "J" IS NOT SHOWN, "J" WILL BE KEPT EQUAL TO OR LESS THAN "H" ON TYPES 3, 5 AND 22. WHERE "J" CAN EXCEED "H", IT SHALL BE SHOWN.
6. "H" DIMENSIONS OF STIRRUPS TO BE SHOWN AS NEEDED TO FIT WITHIN THE CONCRETE.
7. UNLESS OTHERWISE NOTED, DIAMETER "D" IS THE SAME FOR ALL BENDS AND HOOKS ON A BAR (EXCEPT FOR BEND TYPES 11 AND 13).
8. WHERE SLOPE DIFFERS FROM 45° OFFSET, "H" AND "K" MUST BE SHOWN.
9. WHERE BARS ARE TO BE BENT MORE ACCURATELY THAN STANDARD BENDING TOLERANCES, BENDING DIMENSIONS REQUIRING CLOSER FABRICATION SHOULD HAVE LIMITS INDICATED.
10. FOR RECOMMENDED DIAMETER "D", OF BENDS, HOOKS, ETC., REFER TO TABLE ABOVE, 'CRSI' OR 'ACI' TABLES WHERE APPLICABLE AND REQUIRED.
11. TYPE S1-S6, S11, T1-T3 AND T6-T9 APPLICABLE TO BAR SIZES #3 THROUGH #8.

STANDARD BAR BENDS

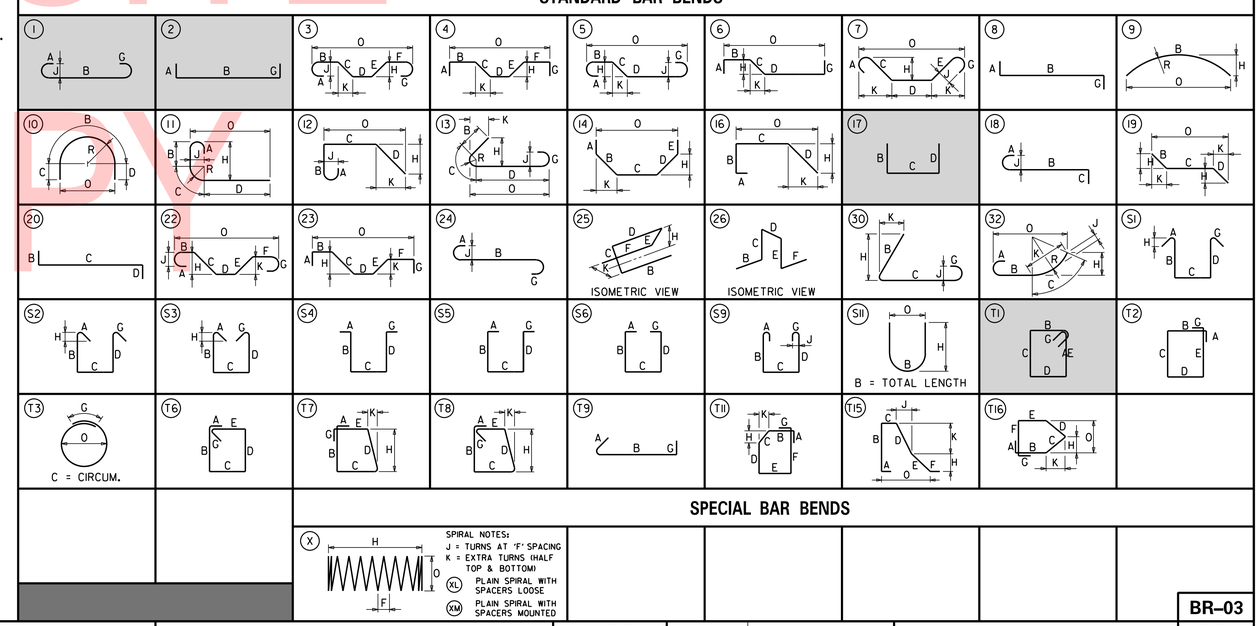

SPECIAL BAR BENDS

STIRRUP AND TIE HOOKS

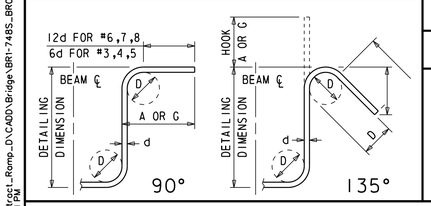

180° AND 90° END HOOKS

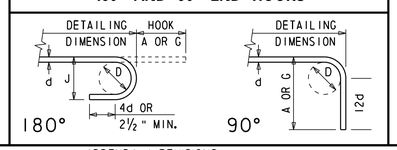

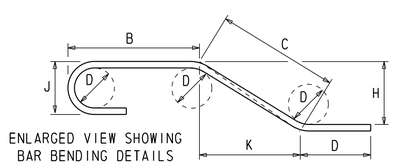

ENLARGED VIEW SHOWING BAR BENDING DETAILS

ADDENDA / REVISIONS

NOT TO SCALE

REHABILITATION OF I-95, 2ND STREET ON-RAMP IMPROVEMENTS

CONTRACT	BRIDGE NO.	1 748S 059
T201907402	DESIGNED BY: D. NIZAMOFF	
COUNTY		
NEW CASTLE	CHECKED BY: W. GESCHREI	

REINFORCEMENT SCHEDULE SUBSTRUCTURE

BR-03

SECTION: WRA

SHEET NO. 146

N:\31987-004\Contract_Ramp_D\CADD\Bridge\BR1-748S_BR03.dgn 8/23/2019 4:13:11 PM

① ANY MARK NUMBER WITH SUFFIX 'E' DENOTES EPOXY COATED REINFORCING STEEL.

② ALL MARK 'LOCATION PREFIXES' SHALL CONSIST OF TWO LETTERS AND ARE AS FOLLOWS: AB = ABUTMENT, AS = APPROACH SLAB, BC = BOX CULVERT, BW = BACKWALL, CL = COLUMN, DK = DECK, DL = DOWEL, FT = FOOTING, HW = HEADWALL, MS = MISC. BARS, PA = PARAPET, PR = PIER, SC = SHEETPILE CAP, SL = SLAB, SS = SLEEPER SLAB, TW = TOEWALL, WL = WALL (UNIQUE LOCATION), WW = WINGWALL

SPECIFICATIONS					BENDING DIMENSIONS (FEET-INCHES /QUARTER INCH)										
QTY.	SIZE	LENGTH	MARK	TYPE	A	B	C	D	E	F/R	G	H	J	K	O
SPAN 26S															
12	5	40-0.0	DK5001	STR		40-0.0									
4	5	40-0.0	DK5003E	STR		40-0.0									
122	5	6-6.2	DK5004E	DE16		2-6.0	1-2.3	0-11.3	1-10.0			1-6.1		1-0.2	
4	5	30-6.1	DK5011E	STR		30-6.1									
18	5	30-6.1	DK5012	STR		30-6.1									
41	5	10-0.0	DK5013	1	0-7.0	9-4.0							0-5.0		
87	5	8-10.3	DK5014	1	0-7.0	8-3.3							0-5.0		
2	5	6-1.2	DK5030E	DE12	0-6.0	1-5.2	0-10.3	0-6.3	0-11.3	1-2.3	0-6.0	0-3.3		0-5.2	
7	5	5-0.2	DK5201	16	2-0.0	0-9.0	1-2.0	1-1.2				0-9.2		0-9.2	1-11.2
6	5	5-1.3	DK5202	STR		5-1.3									
4	5	4-6.2	DK5203	16	1-10.2	0-9.0	0-9.2	1-1.2				0-9.2		0-9.2	1-7.0
5	5	4-9.0	DK5204	16	1-8.2	0-10.2	1-2.0	1-0.0				0-8.2		0-8.2	1-10.2
16	5	9-5.3	DK5205	STR		9-5.3									
8	5	9-6.0	DK5206	STR		9-6.0									
16	5	3-2.0	DK5207	STR		3-2.0									
3	5	8-4.1	DK5208	STR		8-4.1									
8	5	10-3.0	DK5209	STR		10-3.0									
20	6	3-6.0	DK6001	STR		3-6.0									
8	5	29-8.0	PA501E	STR		29-8.0									
8	5	19-8.0	PA503E	STR		19-8.0									
122	5	7-10.2	PA504E	SP04	0-6.0	0-10.3	2-8.1	0-7.2	2-8.0		0-6.0	2-8.0		0-3.1	
2	5	5-1.2	PA511E	DE06		2-10.0	0-7.2	1-1.0			0-7.0	2-10.0	1-0.3		0-8.3
2	5	9-8.0	PA512E	STR		9-8.0									
8	5	18-4.1	PA516E	STR		18-4.1									
8	5	3-2.0	PA531E	STR		3-2.0									
4••	5	7-8.3	PA532E	SP04	0-6.0	0-10.3	2-7.1	0-7.3	2-7.0		0-6.0	2-7.0		0-3.0	
		T0				T0	T0	T0	T0			T0		T0	
		7-4.2			0-6.0	1-0.0	2-4.1	0-8.1	2-4.0		0-6.0	2-4.0		0-3.3	
			••1 SET OF 4												
6	5	5-11.2	PA533E	STR		5-11.2									
2	5	5-11.2	PA534E	16			2-1.2	3-10.0				0-4.0		3-10.0	5-11.2

SPECIFICATIONS					BENDING DIMENSIONS (FEET-INCHES /QUARTER INCH)										
QTY.	SIZE	LENGTH	MARK	TYPE	A	B	C	D	E	F/R	G	H	J	K	O
SPAN 27S															
11	5	40-0.0	DK5001	STR		40-0.0									
4	5	40-0.0	DK5003E	STR		40-0.0									
108	5	6-6.2	DK5004E	DE16		2-6.0	1-2.3	0-11.3	1-10.0			1-6.1		1-0.2	
6•	5	7-4.3	DK5005E	DE16		2-7.2	1-10.0	1-1.1	1-10.0			1-6.1		1-0.2	
		T0					T0								
		8-7.2				2-7.2	3-0.3	1-1.1	1-10.0			1-6.1		1-0.2	
			••2 SETS OF 3												
2	5	8-7.3	DK5006E	DE24		3-0.3	1-1.1	0-7.0	1-3.1	2-7.2		0-5.3	2-7.2	0-4.0	3-0.3
4••	5	13-0.2	DK5007E	T1	0-5.2	2-3.3	3-9.0	2-3.3	3-9.0		0-5.2				
		T0				T0		T0							
		20-2.0			0-5.2	5-10.2	3-9.0	5-10.2	3-9.0		0-5.2				
			••1 SET OF 4												
2	5	10-4.0	DK5008E	SP06	1-0.0	2-8.2	2-1.0	2-8.2	0-5.0	0-5.0	1-0.0	1-11.0	1-11.0	1-11.0	5-11.0
13	5	33-7.1	DK5015	STR		33-7.1									
4	5	33-7.1	DK5016E	STR		33-7.1									
120	5	8-5.2	DK5017	1	0-7.0	7-10.2							0-5.0		
10	5	9-8.1	DK5018	1	0-7.0	9-1.1							0-5.0		
10	5	3-7.1	DK5019	STR		3-7.1									
6	5	7-7.1	DK5037	4				3-8.1	1-8.0	2-3.0		1-2.0			7-1.2
7	5	10-7.0	DK5038	4		2-3.0	1-6.2	3-0.0	1-6.2	2-3.0		1-1.0		1-1.0	9-8.0
14	5	5-0.2	DK5201	16	2-0.0	0-9.0	1-2.0	1-1.2				0-9.2		0-9.2	1-11.2
3	5	8-4.1	DK5208	STR		8-4.1									
8	5	10-3.0	DK5209	STR		10-3.0									
3	5	10-0.0	DK5210	STR		10-0.0									
8	5	12-8.2	DK5211	STR		12-8.2									
12	6	3-6.0	DK6001	STR		3-6.0									
8	5	29-8.0	PA501E	STR		29-8.0									
8	5	19-8.0	PA503E	STR		19-8.0									
110	5	7-10.2	PA504E	SP04	0-6.0	0-10.3	2-8.1	0-7.2	2-8.0		0-6.0	2-8.0		0-3.1	
4	5	10-4.0	PA505E	SP06	1-0.0	2-8.2	2-1.0	2-8.2	0-5.0	0-5.0	1-0.0	1-11.0	1-11.0	1-11.0	5-11.0
6•	5	7-7.0	PA506E	DE09	1-0.0	2-8.0	1-3.0	2-8.0				2-8.0	2-8.0	0-3.1	1-5.3
		T0					T0								T0
		8-10.0			1-0.0	2-8.0	2-6.0	2-8.0				2-8.0	2-8.0	0-3.1	2-8.3
			••2 SETS OF 3												
2	5	7-2.1	PA507E	DE09	1-0.0	1-0.1	2-6.0	2-8.0				1-0.1	2-8.0	0-1.1	2-7.1
2	5	9-8.0	PA512E	STR		9-8.0									
1	5	7-6.3	PA513E	4		2-3.0	0-5.1	2-2.1	0-5.1	2-3.0		0-3.2		0-3.2	7-3.1
8	5	21-6.2	PA517E	STR		21-6.2									

SPECIFICATIONS					BENDING DIMENSIONS (FEET-INCHES /QUARTER INCH)										
QTY.	SIZE	LENGTH	MARK	TYPE	A	B	C	D	E	F/R	G	H	J	K	O
SPAN 28S															
13	5	40-0.0	DK5001	STR		40-0.0									
4	5	40-0.0	DK5003E	STR		40-0.0									
116	5	6-6.2	DK5004E	DE16		2-6.0	1-2.3	0-11.3	1-10.0			1-6.1		1-0.2	
13	5	34-8.3	DK5020	STR		34-8.3									
4	5	34-8.3	DK5021E	STR		34-8.3									
134	5	8-7.0	DK5022	1	0-7.0	8-0.0							0-5.0		
6	5	7-7.1	DK5037	4				3-8.1	1-8.0	2-3.0		1-2.0			7-1.2
5	5	10-7.0	DK5038	4		2-3.0	1-6.2	3-0.0	1-6.2	2-3.0		1-1.0		1-1.0	9-8.0
16	5	5-0.2	DK5201	16	2-0.0	0-9.0	1-2.0	1-1.2				0-9.2		0-9.2	1-11.2
3	5	10-0.0	DK5210	STR		10-0.0									
8	5	12-8.2	DK5211	STR		12-8.2									
3	5	5-0.3	DK5212	STR		5-0.3									
3	5	7-8.2	DK5213	STR		7-8.2									
8	5	15-9.3	DK5215	STR		15-9.3									
12	6	3-6.0	DK6001	STR		3-6.0									
8	5	29-8.0	PA501E	STR		29-8.0									
8	5	19-8.0	PA503E	STR		19-8.0									
119	5	7-10.2	PA504E	SP04	0-6.0	0-10.3	2-8.1	0-7.2	2-8.0		0-6.0	2-8.0		0-3.1	
1	5	7-5.1	PA514E	4	0-10.0	1-3.2	0-5.1	2-2.1	0-5.1	2-3.0		0-3.2		0-3.2	6-3.3
8	5	22-9.0	PA518E	STR		22-9.0									

ASTM STANDARD ENGLISH REINFORCING BARS				RECOMMENDED END HOOKS, APPLICABLE TO ALL GRADES				STIRRUP AND TIE HOOKS, APPLICABLE TO ALL GRADES			
	NOMINAL DIMENSIONS				180° HOOKS		90° HOOKS		90° HOOK	135° HOOK	
BAR SIZE	DIAMETER (INCHES)	AREA (INCHES²)	WEIGHT (LBS./FT.)	D	A OR G	J	A OR G	D	A OR G	A OR G	A OR G
3	0.375	0.110	0.376	2¼"	5"	3"	6"	1½"	4"	4"	2½"
4	0.500	0.200	0.668	3"	6"	4"	8"	2"	4½"	4½"	3"
5	0.625	0.310	1.043	3¾"	7"	5"	10"	2½"	6"	5½"	3¾"
6	0.750	0.440	1.502	4½"	8"	6"	1-0"	4½"	1-0"	8"	4½"
7	0.875	0.600	2.044	5¼"	10"	7"	1-2"	5¼"	1-2"	9"	5¼"
8	1.000	0.790	2.670	6"	11"	8"	1-4"	6"	1-4"	10½"	6"
9	1.128	1.000	3.400	9½"	1-3"	11¾"	1-7"				
10	1.270	1.270	4.303	10¾"	1-5"	1-1¼"	1-10"				
11	1.410	1.560	5.313	1-0"	1-7"	1-2¾"	2-0"				
14	1.693	2.250	7.650	1-6¼"	2-3"	1-9¾"	2-7"				
18	2.257	4.000	13.600	2-0"	3-0"	2-4½"	3-5"				

NOTES:

1. FIGURES SHOWN IN CIRCLES REPRESENT BAR BEND TYPES.
2. STANDARD BAR BENDS INCLUDE ONLY THOSE TYPES BELOW, INDICATED AS SUCH.
3. ALL DIMENSIONS OUT-TO-OUT, EXCEPT "A" AND "G" ON STD. 180° AND 135° HOOKS.
4. "J" DIMENSIONS ON 180° HOOKS TO BE SHOWN ONLY WHERE NECESSARY TO RESTRICT HOOK SIZE, OTHERWISE STANDARD 'ACI' HOOKS ARE TO BE USED.
5. WHERE "J" IS NOT SHOWN, "J" WILL BE KEPT EQUAL TO OR LESS THAN "H" ON TYPES 3, 5 AND 22. WHERE "J" CAN EXCEED "H", IT SHALL BE SHOWN.
6. "H" DIMENSIONS OF STIRRUPS TO BE SHOWN AS NEEDED TO FIT WITHIN THE CONCRETE.
7. UNLESS OTHERWISE NOTED, DIAMETER "D" IS THE SAME FOR ALL BENDS AND HOOKS ON A BAR (EXCEPT FOR BEND TYPES 11 AND 13).
8. WHERE SLOPE DIFFERS FROM 45° OFFSET, "H" AND "K" MUST BE SHOWN.
9. WHERE BARS ARE TO BE BENT MORE ACCURATELY THAN STANDARD BENDING TOLERANCES, BENDING DIMENSIONS REQUIRING CLOSER FABRICATION SHOULD HAVE LIMITS INDICATED.
10. FOR RECOMMENDED DIAMETER "D", OF BENDS, HOOKS, ETC., REFER TO TABLE ABOVE, 'CRSI' OR 'ACI' TABLES WHERE APPLICABLE AND REQUIRED.
11. TYPE S1-S6, S11, T1-T3 AND T6-T9 APPLICABLE TO BAR SIZES #3 THROUGH #8.

STANDARD BAR BENDS

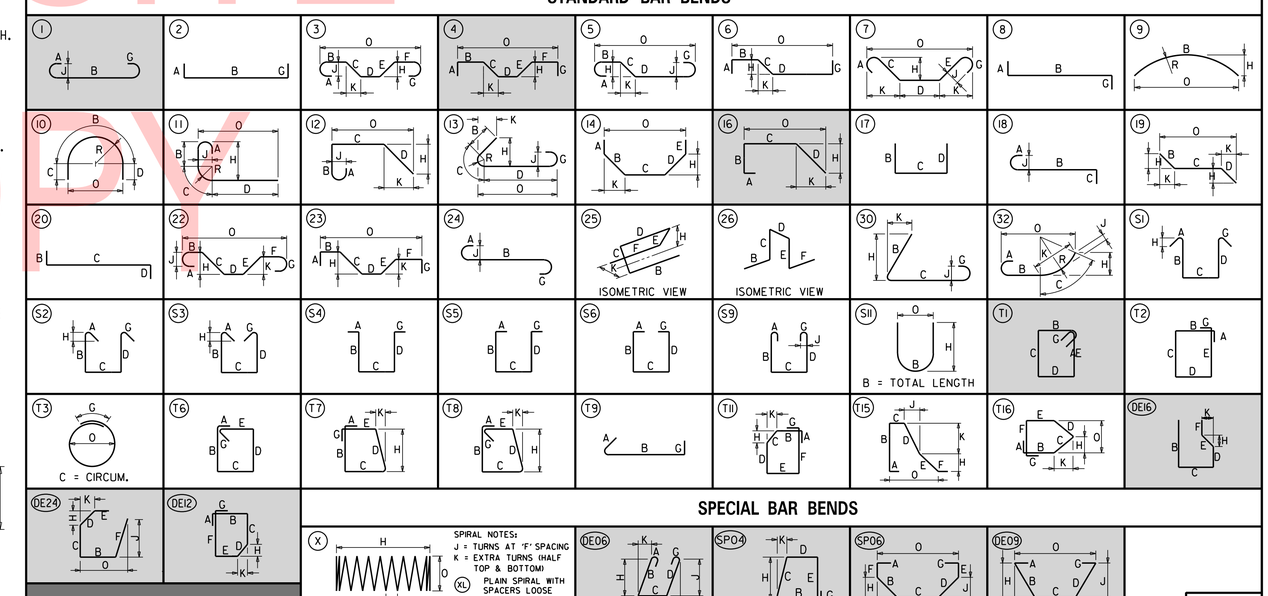

SPECIAL BAR BENDS

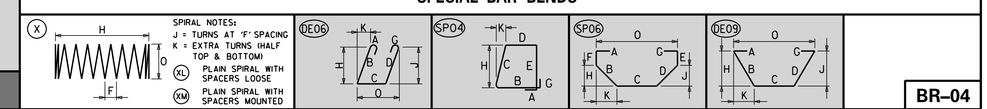

STIRRUP AND TIE HOOKS

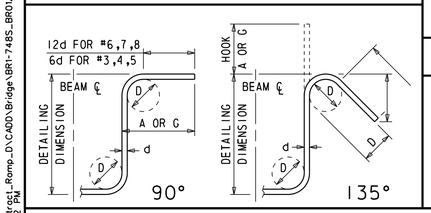

180° AND 90° END HOOKS

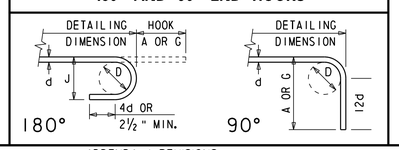

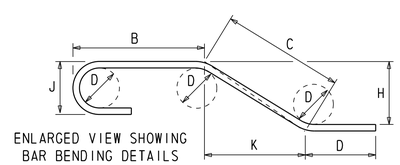

ADDENDA / REVISIONS

NOT TO SCALE

REHABILITATION OF I-95, 2ND STREET ON-RAMP IMPROVEMENTS

CONTRACT	BRIDGE NO. 1 748S 059	REINFORCEMENT SCHEDULE SUPERSTRUCTURE	BR-04
T201907402	DESIGNED BY: D. NIZAMOFF		SECTION WRA
COUNTY NEW CASTLE	CHECKED BY: W. GESCHREI		SHEET NO. 147

N:\31987-004\Contract_Ramp_D\CADD\Bridge\BR1-748S_BR01.dgn 8/23/2019 4:13:12 PM

UNOFFICIAL WEBSITE COPY

① ANY MARK NUMBER WITH SUFFIX 'E' DENOTES EPOXY COATED REINFORCING STEEL.

② ALL MARK 'LOCATION PREFIXES' SHALL CONSIST OF TWO LETTERS AND ARE AS FOLLOWS: AB = ABUTMENT, AS = APPROACH SLAB, BC = BOX CULVERT, BW = BACKWALL, CL = COLUMN, DK = DECK, DL = DOWEL, FT = FOOTING, HW = HEADWALL, MS = MISC. BARS, PA = PARAPET, PR = PIER, SC = SHEETPILE CAP, SL = SLAB, SS = SLEEPER SLAB, TW = TOEWALL, WL = WALL (UNIQUE LOCATION), WW = WINGWALL

SPECIFICATIONS					BENDING DIMENSIONS (FEET-INCHES /QUARTER INCH)										
QTY.	SIZE	LENGTH	MARK	TYPE	A	B	C	D	E	F/R	G	H	J	K	O
SPAN 29S															
11	5	40-0.0	DK5001	STR		40-0.0									
116	5	5-10.2	DK5002E	DE16		2-6.0	1-0.1	0-11.3	1-4.2			1-1.2		0-9.2	
4	5	40-0.0	DK5003E	STR		40-0.0									
11	5	35-10.1	DK5023	STR		35-10.1									
4	5	35-10.1	DK5024E	STR		35-10.1									
129	5	6-10.3	DK5025	1	0-7.0	6-3.3							0-5.0		
12	5	7-7.1	DK5037	4				3-8.1	1-8.0	2-3.0		1-2.0			7-1.2
11	5	10-7.0	DK5038	4		2-3.0	1-6.2	3-0.0	1-6.2	2-3.0		1-1.0		1-1.0	9-8.0
22	5	5-0.2	DK5201	16	2-0.0	0-9.0	1-2.0	1-1.2				0-9.2		0-9.2	1-11.2
3	5	5-0.3	DK5212	STR		5-0.3									
6	5	3-8.2	DK5214	STR		3-8.2									
8	5	15-8.2	DK5216	STR		15-8.2									
3	5	4-8.3	DK5217	STR		4-8.3									
6	5	5-4.3	DK5219	STR		5-4.3									
8	5	18-3.2	DK5221	STR		18-3.2									
12	6	3-6.0	DK6001	STR		3-6.0									
8	5	29-8.0	PA501E	STR		29-8.0									
122	5	7-4.3	PA502E	SP04	0-6.0	0-8.0	2-8.0	0-4.3	2-8.0		0-6.0	2-8.0		0-3.1	
8	5	19-8.0	PA503E	STR		19-8.0									
1	5	7-6.3	PA513E	4		2-3.0	0-5.1	2-2.1	0-5.1	2-3.0		0-3.2		0-3.2	7-3.1
1	5	7-10.3	PA515E	4	0-10.0	1-9.0	0-5.1	2-2.1	0-5.1	2-3.0		0-3.2		0-3.2	6-9.1
8	5	23-1.2	PA519E	STR		23-1.2									

SPECIFICATIONS					BENDING DIMENSIONS (FEET-INCHES /QUARTER INCH)										
QTY.	SIZE	LENGTH	MARK	TYPE	A	B	C	D	E	F/R	G	H	J	K	O
SPAN 30S															
10	5	40-0.0	DK5001	STR		40-0.0									
118	5	5-10.2	DK5002E	DE16		2-6.0	1-0.1	0-11.3	1-4.2			1-1.2		0-9.2	
4	5	40-0.0	DK5003E	STR		40-0.0									
10	5	35-3.3	DK5026	STR		35-3.3									
4	5	35-3.3	DK5027E	STR		35-3.3									
133	5	7-7.3	DK5028	1	0-7.0	7-0.3							0-5.0		
2	5	5-8.2	DK5029E	DE12	0-6.0	1-5.2	0-8.1	0-6.3	0-11.3	1-0.1	0-6.0	0-3.3		0-5.2	
6	5	7-7.1	DK5037	4				3-8.1	1-8.0	2-3.0		1-2.0			7-1.2
6	5	10-7.0	DK5038	4		2-3.0	1-6.2	3-0.0	1-6.2	2-3.0		1-1.0		1-1.0	9-8.0
26	5	5-0.2	DK5201	16	2-0.0	0-9.0	1-2.0	1-1.2				0-9.2		0-9.2	1-11.2
3	5	4-8.3	DK5217	STR		4-8.3									
3	5	4-10.2	DK5218	STR		4-10.2									
6	5	5-5.1	DK5220	STR		5-5.1									
8	5	18-5.0	DK5222	STR		18-5.0									
6	5	6-10.3	DK5223	STR		6-10.3									
8	5	21-3.2	DK5225	STR		21-3.2									
12	6	3-6.0	DK6001	STR		3-6.0									
8	5	29-8.0	PA501E	STR		29-8.0									
121	5	7-4.3	PA502E	SP04	0-6.0	0-8.0	2-8.0	0-4.3	2-8.0		0-6.0	2-8.0		0-3.1	
8	5	19-8.0	PA503E	STR		19-8.0									
2	5	4-11.0	PA510E	DE06		2-10.0	0-5.0	1-1.0			0-7.0	2-10.0	1-0.3		0-6.1
2	5	9-8.0	PA512E	STR		9-8.0									
1	5	7-6.3	PA513E	4		2-3.0	0-5.1	2-2.1	0-5.1	2-3.0		0-3.2		0-3.2	7-3.1
8	5	23-2.2	PA520E	STR		23-2.2									

SPECIFICATIONS					BENDING DIMENSIONS (FEET-INCHES /QUARTER INCH)										
QTY.	SIZE	LENGTH	MARK	TYPE	A	B	C	D	E	F/R	G	H	J	K	O
SPAN 31S															
9	5	40-0.0	DK5001	STR		40-0.0									
112	5	5-10.2	DK5002E	DE16		2-6.0	1-0.1	0-11.3	1-4.2			1-1.2		0-9.2	
4	5	40-0.0	DK5003E	STR		40-0.0									
4••	5	13-0.2	DK5007E	T1	0-5.2	2-3.3	3-9.0	2-3.3	3-9.0		0-5.2				
		T0				T0		T0							
		20-2.0			0-5.2	5-10.2	3-9.0	5-10.2	3-9.0		0-5.2				
			••1 SET OF 4												
2	5	10-4.0	DK5008E	SP06	1-0.0	2-8.2	2-1.0	2-8.2	0-5.0	0-5.0	1-0.0	1-11.0	1-11.0	1-11.0	5-11.0
6•	5	7-2.1	DK5009E	DE16		2-7.2	1-7.2	1-1.1	1-10.0			1-6.1		1-0.2	
		T0					T0								
		8-5.0				2-7.2	2-10.1	1-1.1	1-10.0			1-6.1		1-0.2	
			••2 SETS OF 3												
2	5	8-5.1	DK5010E	DE24		2-10.1	1-1.1	0-7.0	1-3.1	2-7.2		0-5.3	2-7.2	0-4.0	2-10.1
9	5	35-3.3	DK5026	STR		35-3.3									
4	5	35-3.3	DK5027E	STR		35-3.3									
123	5	6-7.2	DK5031	1	0-7.0	6-0.2							0-5.0		
10	5	8-5.2	DK5032	1	0-7.0	7-10.2							0-5.0		
10	5	3-7.2	DK5033	STR		3-7.2									
6	5	7-7.1	DK5037	4				3-8.1	1-8.0	2-3.0		1-2.0			7-1.2
7	5	10-7.0	DK5038	4		2-3.0	1-6.2	3-0.0	1-6.2	2-3.0		1-1.0		1-1.0	9-8.0
32	5	5-0.2	DK5201	16	2-0.0	0-9.0	1-2.0	1-1.2				0-9.2		0-9.2	1-11.2
3	5	4-8.3	DK5217	STR		4-8.3									
9	5	4-6.0	DK5224	STR		4-6.0									
8	5	21-4.3	DK5226	STR		21-4.3									
3	5	4-10.2	DK5227	STR		4-10.2									
9	5	5-6.3	DK5228	STR		5-6.3									
8	5	24-3.2	DK5229	STR		24-3.2									
12	6	3-6.0	DK6001	STR		3-6.0									
8	5	29-8.0	PA501E	STR		29-8.0									
114	5	7-4.3	PA502E	SP04	0-6.0	0-8.0	2-8.0	0-4.3	2-8.0		0-6.0	2-8.0		0-3.1	
8	5	19-8.0	PA503E	STR		19-8.0									
4	5	10-4.0	PA505E	SP06	1-0.0	2-8.2	2-1.0	2-8.2	0-5.0	0-5.0	1-0.0	1-11.0	1-11.0	1-11.0	5-11.0
6•	5	7-4.2	PA508E	DE09	1-0.0	2-8.0	1-0.2	2-8.0				2-8.0	2-8.0	0-3.1	1-3.3
		T0					T0								T0
		8-7.2			1-0.0	2-8.0	2-3.2	2-8.0				2-8.0	2-8.0	0-3.1	2-6.3
			••2 SETS OF 3												

UNOFFICIAL WEBSITE COPY

ASTM STANDARD ENGLISH REINFORCING BARS				RECOMMENDED END HOOKS, APPLICABLE TO ALL GRADES				STIRRUP AND TIE HOOKS, APPLICABLE TO ALL GRADES			
	NOMINAL DIMENSIONS				180° HOOKS		90° HOOKS		90° HOOK	135° HOOK	
BAR SIZE	DIAMETER (INCHES)	AREA (INCHES²)	WEIGHT (LBS./FT.)	D	A OR G	J	A OR G	D	A OR G	A OR G	A OR G
3	0.375	0.110	0.376	2¼"	5"	3"	6"	1½"	4"	4"	2½"
4	0.500	0.200	0.668	3"	6"	4"	8"	2"	4½"	4½"	3"
5	0.625	0.310	1.043	3¾"	7"	5"	10"	2½"	6"	5½"	3¾"
6	0.750	0.440	1.502	4½"	8"	6"	1-0"	4½"	1-0"	8"	4½"
7	0.875	0.600	2.044	5¼"	10"	7"	1-2"	5¼"	1-2"	9"	5¼"
8	1.000	0.790	2.670	6"	11"	8"	1-4"	6"	1-4"	10½"	6"
9	1.128	1.000	3.400	9½"	1-3"	11¾"	1-7"				
10	1.270	1.270	4.303	10¾"	1-5"	1-1¼"	1-10"				
11	1.410	1.560	5.313	1-0"	1-7"	1-2¾"	2-0"				
14	1.693	2.250	7.650	1-6¼"	2-3"	1-9¾"	2-7"				
18	2.257	4.000	13.600	2-0"	3-0"	2-4½"	3-5"				

NOTES:

1. FIGURES SHOWN IN CIRCLES REPRESENT BAR BEND TYPES.
2. STANDARD BAR BENDS INCLUDE ONLY THOSE TYPES BELOW, INDICATED AS SUCH.
3. ALL DIMENSIONS OUT-TO-OUT, EXCEPT "A" AND "G" ON STD. 180° AND 135° HOOKS.
4. "J" DIMENSIONS ON 180° HOOKS TO BE SHOWN ONLY WHERE NECESSARY TO RESTRICT HOOK SIZE, OTHERWISE STANDARD 'ACI' HOOKS ARE TO BE USED.
5. WHERE "J" IS NOT SHOWN, "J" WILL BE KEPT EQUAL TO OR LESS THAN "H" ON TYPES 3, 5 AND 22. WHERE "J" CAN EXCEED "H", IT SHALL BE SHOWN.
6. "H" DIMENSIONS OF STIRRUPS TO BE SHOWN AS NEEDED TO FIT WITHIN THE CONCRETE.
7. UNLESS OTHERWISE NOTED, DIAMETER "D" IS THE SAME FOR ALL BENDS AND HOOKS ON A BAR (EXCEPT FOR BEND TYPES 11 AND 13).
8. WHERE SLOPE DIFFERS FROM 45° OFFSET, "H" AND "K" MUST BE SHOWN.
9. WHERE BARS ARE TO BE BENT MORE ACCURATELY THAN STANDARD BENDING TOLERANCES, BENDING DIMENSIONS REQUIRING CLOSER FABRICATION SHOULD HAVE LIMITS INDICATED.
10. FOR RECOMMENDED DIAMETER "D", OF BENDS, HOOKS, ETC., REFER TO TABLE ABOVE, 'CRSI' OR 'ACI' TABLES WHERE APPLICABLE AND REQUIRED.
11. TYPE S1-S6, S11, T1-T3 AND T6-T9 APPLICABLE TO BAR SIZES #3 THROUGH #8.

STANDARD BAR BENDS

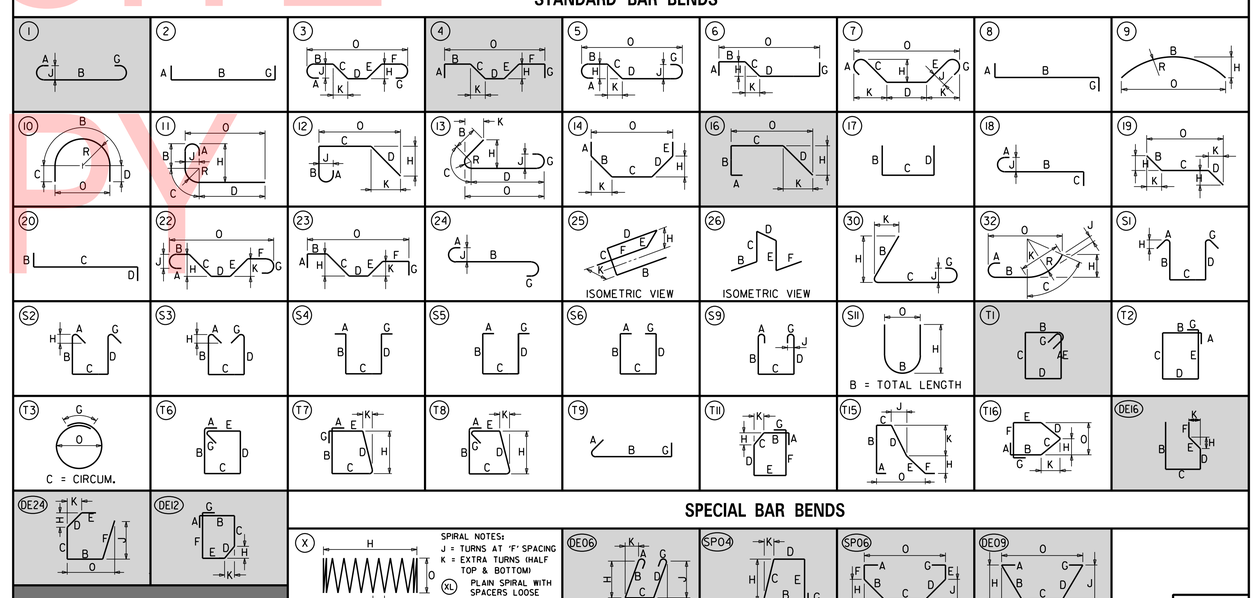

SPECIAL BAR BENDS

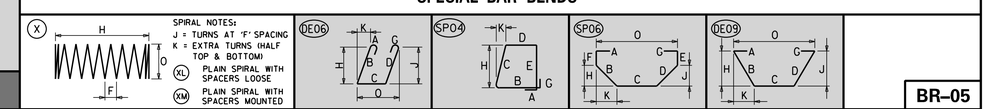

STIRRUP AND TIE HOOKS

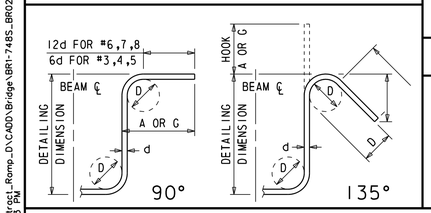

180° AND 90° END HOOKS

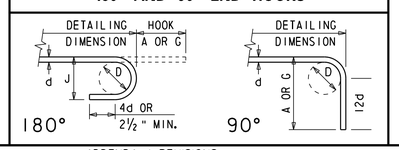

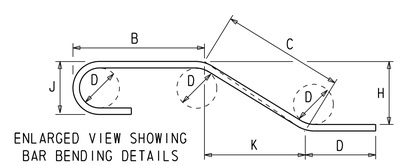

ADDENDA / REVISIONS

NOT TO SCALE

REHABILITATION OF I-95, 2ND STREET ON-RAMP IMPROVEMENTS

CONTRACT	BRIDGE NO.	1 748S 059
T201907402	DESIGNED BY: D. NIZAMOFF	
COUNTY	CHECKED BY: W. GESCHREI	
NEW CASTLE		

REINFORCEMENT SCHEDULE SUPERSTRUCTURE

BR-05

SECTION: WRA

SHEET NO. 148

N:\31987-004\Contract_Ramp_D\CADD\Bridge\BR1-748S_BR02.dgn
8/23/2019 4:32:13 PM

(1) ANY MARK NUMBER WITH SUFFIX 'E' DENOTES EPOXY COATED REINFORCING STEEL.

(2) ALL MARK 'LOCATION PREFIXES' SHALL CONSIST OF TWO LETTERS AND ARE AS FOLLOWS: AB = ABUTMENT, AS = APPROACH SLAB, BC = BOX CULVERT, BW = BACKWALL, CL = COLUMN, DK = DECK, DL = DOWEL, FT = FOOTING, HW = HEADWALL, MS = MISC. BARS, PA = PARAPET, PR = PIER, SC = SHEETPILE CAP, SL = SLAB, SS = SLEEPER SLAB, TW = TOEWALL, WL = WALL (UNIQUE LOCATION), WW = WINGWALL

SPECIFICATIONS					BENDING DIMENSIONS (FEET-INCHES /QUARTER INCH)										
QTY.	SIZE	LENGTH	MARK	TYPE	A	B	C	D	E	F / R	G	H	J	K	O
SPAN 31S CONTINUED															
2	5	6-11 3	PA509E	DE09	1-0 0	1-0 1	2-3 2	2-8 0				1-0 1	2-8 0	0-1 1	2-4 3
2	5	9-8 0	PA512E	STR		9-8 0									
1	5	7-6 3	PA513E	4		2-3 0	0-5 1	2-2 1	0-5 1	2-3 0		0-3 2		0-3 2	7-3 1
8	5	23-4 0	PA521E	STR		23-4 0									
SPAN 32S															
27	5	40-0 0	DK5001	STR		40-0 0									
223	5	5-10 2	DK5002E	DE16		2-6 0	1-0 1	0-11 3	1-4 2			1-1 2		0-9 2	
12	5	40-0 0	DK5003E	STR		40-0 0									
2	5	5-8 2	DK5029E	DE12	0-6 0	1-5 2	0-8 1	0-6 3	0-11 3	1-0 1	0-6 0	0-3 3		0-5 2	
9	5	23-5 2	DK5034	STR		23-5 2									
4	5	23-5 2	DK5035E	STR		23-5 2									
258	5	7-3 0	DK5036	1	0-7 0	6-8 0							0-5 0		
12	5	7-7 1	DK5037	4				3-8 1	1-8 0	2-3 0		1-2 0			7-1 2
14	5	10-7 0	DK5038	4		2-3 0	1-6 2	3-0 0	1-6 2	2-3 0		1-1 0		1-1 0	9-8 0
16	5	8-3 0	DK5101E	17		3-7 0	1-1 0	3-7 0							
32	5	5-0 2	DK5201	16	2-0 0	0-9 0	1-2 0	1-1 2				0-9 2		0-9 2	1-11 2
3	5	4-10 2	DK5227	STR		4-10 2									
9	5	5-6 3	DK5228	STR		5-6 3									
8	5	24-4 3	DK5230	STR		24-4 3									
3	5	4-10 1	DK5231	STR		4-10 1									
9	5	7-6 1	DK5233	STR		7-6 1									
8	5	30-1 1	DK5235	STR		30-1 1									
12	6	3-6 0	DK6001	STR		3-6 0									
32	5	29-8 0	PA501E	STR		29-8 0									
227	5	7-4 3	PA502E	SP04	0-6 0	0-8 0	2-8 0	0-4 3	2-8 0		0-6 0	2-8 0		0-3 1	
2	5	4-11 0	PA510E	DE06		2-10 0	0-5 0	1-1 0			0-7 0	2-10 0	1-0 3		0-6 1
4	5	9-8 0	PA512E	STR		9-8 0									
2	5	7-6 3	PA513E	4		2-3 0	0-5 1	2-2 1	0-5 1	2-3 0		0-3 2		0-3 2	7-3 1
8	5	16-3 2	PA522E	STR		16-3 2									
16	5	6-5 0	PA529E	17		2-8 0	1-1 0	2-8 0							
4**	5	10-1 3	PA530E	STR		10-1 3									
		TO				TO									
		10-4 1				10-4 1									
			**2 SETS OF 2												
4*	5	11-2 3	PA539E	17			10-1 3	1-1 0							
		TO					TO								
		11-5 1					10-4 1	1-1 0							
			**2 SETS OF 2												

SPECIFICATIONS					BENDING DIMENSIONS (FEET-INCHES /QUARTER INCH)										
QTY.	SIZE	LENGTH	MARK	TYPE	A	B	C	D	E	F / R	G	H	J	K	O
SPAN 33S															
36	5	40-0 0	DK5001	STR		40-0 0									
4	5	40-0 0	DK5003E	STR		40-0 0									
4**	5	13-0 2	DK5007E	T1	0-5 2	2-3 3	3-9 0	2-3 3	3-9 0		0-5 2				
		TO				TO		TO							
		20-2 0			0-5 2	5-10 2	3-9 0	5-10 2	3-9 0		0-5 2				
			**1 SET OF 4												
2	5	10-4 0	DK5008E	SP06	1-0 0	2-8 2	2-1 0	2-8 2	0-5 0	0-5 0	1-0 0	1-11 0	1-11 0	1-11 0	5-11 0
6*	5	7-2 1	DK5009E	DE16		2-7 2	1-7 2	1-1 1	1-10 0			1-6 1		1-0 2	
		TO				TO	TO								
		8-5 0				2-7 2	2-10 1	1-1 1	1-10 0			1-6 1		1-0 2	
			**2 SETS OF 3												
2	5	8-5 1	DK5010E	DE24		2-10 1	1-1 1	0-7 0	1-3 1	2-7 2		0-5 3	2-7 2	0-4 0	2-10 1
36	5	38-10 1	DK5039	STR		38-10 1									
4	5	38-10 1	DK5040E	STR		38-10 1									
122	5	13-1 0	DK5041	1	0-7 0	12-6 0							0-5 0		
57	5	7-10 0	DK5042	1	0-7 0	7-3 0							0-5 0		
10	5	9-8 1	DK5043	1	0-7 0	9-1 1							0-5 0		
122	5	12-6 0	DK5044	STR		12-6 0									
10	5	4-2 1	DK5045	STR		4-2 1									
244	5	3-3 1	DK5046	STR		3-3 1									
101	5	6-13 0	DK5111E	DE16		2-6 3	1-0 1	1-0 2	1-4 2			1-1 2		0-9 2	
8	5	5-0 2	DK5201	16	2-0 0	0-9 0	1-2 0	1-1 2				0-9 2		0-9 2	1-11 2
3	5	4-8 3	DK5232	STR		4-8 3									
6	5	6-5 0	DK5234	STR		6-5 0									
8	5	20-5 3	DK5236	STR		20-5 3									
3	5	4-9 2	DK5237	STR		4-9 2									
6	5	6-2 0	DK5238	STR		6-2 0									
8	5	20-5 1	DK5239	STR		20-5 1									
17	5	8-7 1	DK5257	16	4-0 0	1-4 2	1-4 3	1-10 0				1-3 2		1-3 2	2-8 1
12	6	3-6 0	DK6001	STR		3-6 0									
8	5	29-8 0	PA501E	STR		29-8 0									
99	5	7-4 3	PA502E	SP04	0-6 0	0-8 0	2-8 0	0-4 3	2-8 0		0-6 0	2-8 0		0-3 1	
4	5	10-4 0	PA505E	SP06	1-0 0	2-8 2	2-1 0	2-8 2	0-5 0	0-5 0	1-0 0	1-11 0	1-11 0	1-11 0	5-11 0
6*	5	7-4 2	PA508E	DE09	1-0 0	2-8 0	1-0 2	2-8 0				2-8 0	2-8 0	0-3 1	1-3 3
		TO					TO								TO
		8-7 2			1-0 0	2-8 0	2-3 2	2-8 0				2-8 0	2-8 0	0-3 1	2-6 3
			**2 SETS OF 3												

SPECIFICATIONS					BENDING DIMENSIONS (FEET-INCHES /QUARTER INCH)										
QTY.	SIZE	LENGTH	MARK	TYPE	A	B	C	D	E	F / R	G	H	J	K	O
SPAN 33S CONTINUED															
2	5	6-11 3	PA509E	DE09	1-0 0	1-0 1	2-3 2	2-8 0				1-0 1	2-8 0	0-1 1	2-4 3
2	5	9-8 0	PA512E	STR		9-8 0									
8	5	34-10 1	PA523E	STR		34-10 1									
SPAN 34S															
36	5	40-0 0	DK5001	STR		40-0 0									
4	5	40-0 0	DK5003E	STR		40-0 0									
66	5	7-10 0	DK5042	1	0-7 0	7-3 0							0-5 0		
36	5	31-3 2	DK5047	STR		31-3 2									
4	5	31-3 2	DK5048E	STR		31-3 2									
131	5	12-10 0	DK5049	1	0-7 0	12-3 0							0-5 0		
131	5	12-3 0	DK5050	STR		12-3 0									
262	5	3-2 0	DK5051	STR		3-2 0									
112	5	6-13 0	DK5111E	DE16		2-6 3	1-0 1	1-0 2	1-4 2			1-1 2		0-9 2	
8	5	5-0 2	DK5201	16	2-0 0	0-9 0	1-2 0	1-1 2				0-9 2		0-9 2	1-11 2
3	5	4-9 2	DK5237	STR		4-9 2									
12	5	6-2 0	DK5238	STR		6-2 0									
8	5	20-5 1	DK5239	STR		20-5 1									
3	5	4-9 3	DK5240	STR		4-9 3									
8	5	20-0 3	DK5241	STR		20-0 3									
18	5	8-7 1	DK5257	16	4-0 0	1-4 2	1-4 3	1-10 0				1-3 2		1-3 2	2-8 1
12	6	3-6 0	DK6001	STR		3-6 0									
112	5	7-4 3	PA502E	SP04	0-6 0	0-8 0	2-8 0	0-4 3	2-8 0		0-6 0	2-8 0		0-3 1	
16	5	19-8 0	PA503E	STR		19-8 0									
8	5	29-3 3	PA524E	STR		29-3 3									

UNOFFICIAL WEBSITE COPY

ASTM STANDARD ENGLISH REINFORCING BARS				RECOMMENDED END HOOKS, APPLICABLE TO ALL GRADES				STIRRUP AND TIE HOOKS, APPLICABLE TO ALL GRADES			
	NOMINAL DIMENSIONS				180° HOOKS		90° HOOKS		90° HOOK	135° HOOK	
BAR SIZE	DIAMETER (INCHES)	AREA ($INCHES^2$)	WEIGHT (LBS./FT.)	D	A OR G	J	A OR G	D	A OR G	A OR G	A OR G
3	0.375	0.110	0.376	2¼"	5"	3"	6"	1½"	4"	4"	2½"
4	0.500	0.200	0.668	3"	6"	4"	8"	2"	4½"	4½"	3"
5	0.625	0.310	1.043	3¾"	7"	5"	10"	2½"	6"	5½"	3¾"
6	0.750	0.440	1.502	4½"	8"	6"	1-0"	4½"	1-0"	8"	4½"
7	0.875	0.600	2.044	5¼"	10"	7"	1-2"	5¼"	1-2"	9"	5¼"
8	1.000	0.790	2.670	6"	11"	8"	1-4"	6"	1-4"	10½"	6"
9	1.128	1.000	3.400	9½"	1-3"	11¾"	1-7"				
10	1.270	1.270	4.303	10¾"	1-5"	1-1¼"	1-10"				
11	1.410	1.560	5.313	1-0"	1-7"	1-2¾"	2-0"				
14	1.693	2.250	7.650	1-6¼"	2-3"	1-9¾"	2-7"				
18	2.257	4.000	13.600	2-0"	3-0"	2-4½"	3-5"				

NOTES:
1. FIGURES SHOWN IN CIRCLES REPRESENT BAR BEND TYPES.
2. STANDARD BAR BENDS INCLUDE ONLY THOSE TYPES BELOW, INDICATED AS SUCH.
3. ALL DIMENSIONS OUT-TO-OUT, EXCEPT "A" AND "G" ON STD. 180° AND 135° HOOKS.
4. "J" DIMENSIONS ON 180° HOOKS TO BE SHOWN ONLY WHERE NECESSARY TO RESTRICT HOOK SIZE, OTHERWISE STANDARD 'ACI' HOOKS ARE TO BE USED.
5. WHERE "J" IS NOT SHOWN, "J" WILL BE KEPT EQUAL TO OR LESS THAN "H" ON TYPES 3, 5 AND 22. WHERE "J" CAN EXCEED "H", IT SHALL BE SHOWN.
6. "H" DIMENSIONS OF STIRRUPS TO BE SHOWN AS NEEDED TO FIT WITHIN THE CONCRETE.
7. UNLESS OTHERWISE NOTED, DIAMETER "D" IS THE SAME FOR ALL BENDS AND HOOKS ON A BAR (EXCEPT FOR BEND TYPES 11 AND 13).
8. WHERE SLOPE DIFFERS FROM 45° OFFSET, "H" AND "K" MUST BE SHOWN.
9. WHERE BARS ARE TO BE BENT MORE ACCURATELY THAN STANDARD BENDING TOLERANCES, BENDING DIMENSIONS REQUIRING CLOSER FABRICATION SHOULD HAVE LIMITS INDICATED.
10. FOR RECOMMENDED DIAMETER "D", OF BENDS, HOOKS, ETC., REFER TO TABLE ABOVE, 'CRSI' OR 'ACI' TABLES WHERE APPLICABLE AND REQUIRED.
11. TYPE S1-S6, S11, T1-T3 AND T6-T9 APPLICABLE TO BAR SIZES #3 THROUGH #8.

STANDARD BAR BENDS

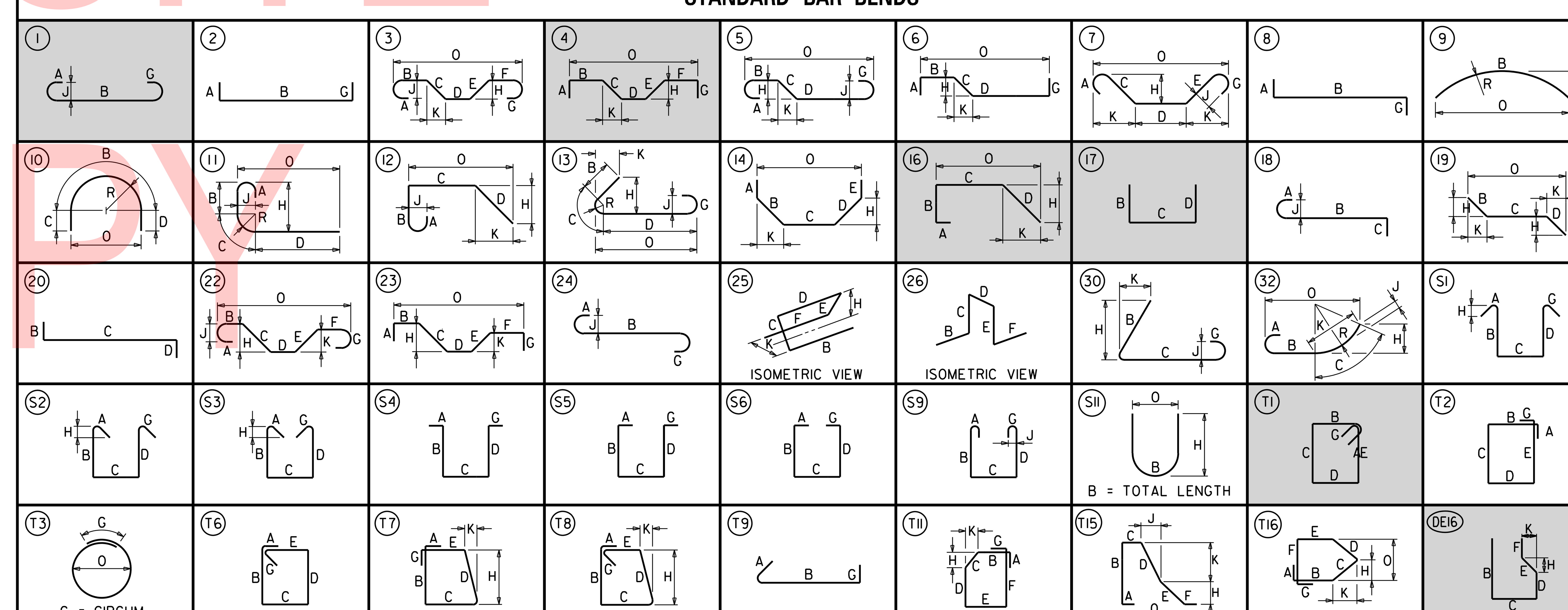

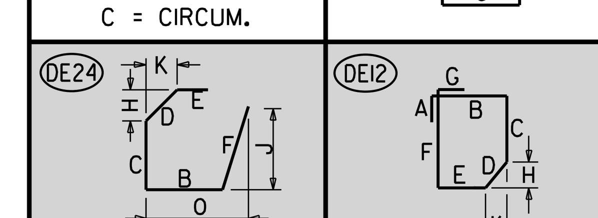

STIRRUP AND TIE HOOKS

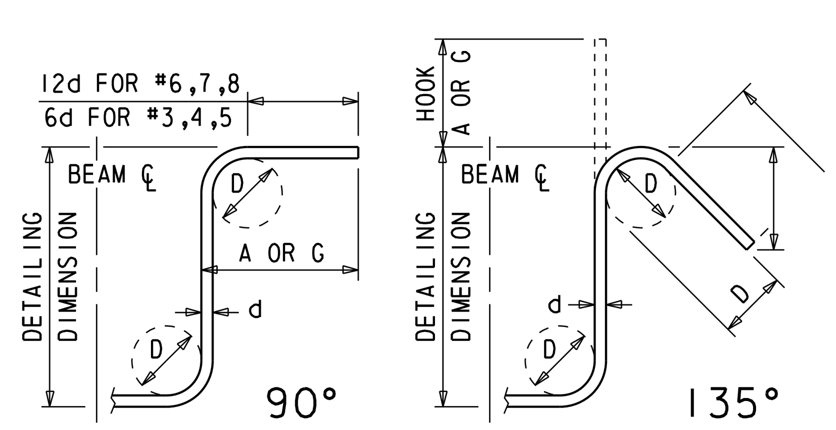

180° AND 90° END HOOKS

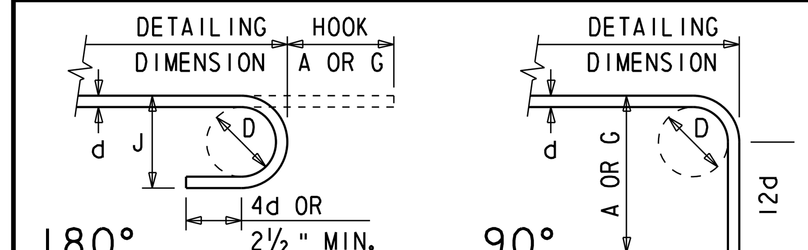

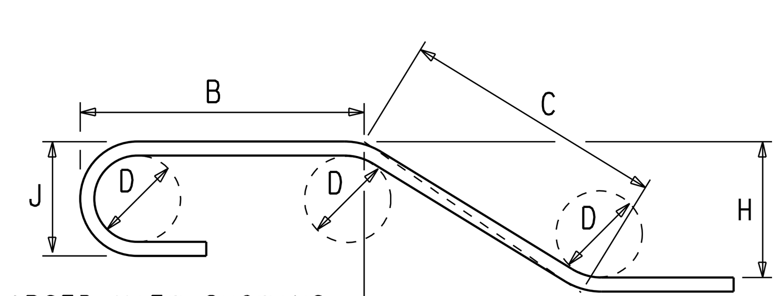

ENLARGED VIEW SHOWING BAR BENDING DETAILS

SPECIAL BAR BENDS

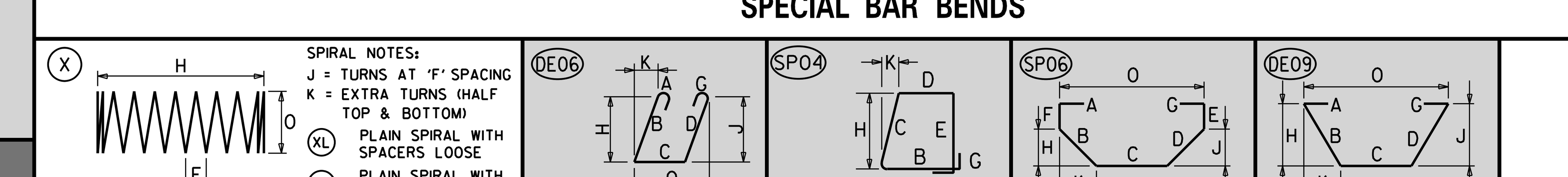

ADDENDA / REVISIONS	

NOT TO SCALE

REHABILITATION OF I-95, 2ND STREET ON-RAMP IMPROVEMENTS

CONTRACT	BRIDGE NO.	1 748S 059
T201907402	DESIGNED BY: D. NIZAMOFF	
COUNTY	CHECKED BY: W. GESCHREI	
NEW CASTLE		

REINFORCEMENT SCHEDULE SUPERSTRUCTURE

BR-06

SECTION
WRA
SHEET NO.
149

N:\31987-004\Contract_Ramp_D\CADD\Bridge\BR1-748S_BR03.dgn
8/23/2019 4:32:13 PM

① ANY MARK NUMBER WITH SUFFIX 'E' DENOTES EPOXY COATED REINFORCING STEEL.

② ALL MARK 'LOCATION PREFIXES' SHALL CONSIST OF TWO LETTERS AND ARE AS FOLLOWS: AB = ABUTMENT, AS = APPROACH SLAB, BC = BOX CULVERT, BW = BACKWALL, CL = COLUMN, DK = DECK, DL = DOWEL, FT = FOOTING, HW = HEADWALL, MS = MISC. BARS, PA = PARAPET, PR = PIER, SC = SHEETPILE CAP, SL = SLAB, SS = SLEEPER SLAB, TW = TOEWALL, WL = WALL (UNIQUE LOCATION), WW = WINGWALL

SPECIFICATIONS					BENDING DIMENSIONS (FEET-INCHES /QUARTER INCH)										
QTY.	SIZE	LENGTH	MARK	TYPE	A	B	C	D	E	F/R	G	H	J	K	O
SPAN 35S															
36	5	40-0.0	DK5001	STR		40-0.0									
4	5	40-0.0	DK5003E	STR		40-0.0									
132	5	12-10.0	DK5049	1	0-7.0	12-3.0							0-5.0		
132	5	12-3.0	DK5050	STR		12-3.0									
264	5	3-2.0	DK5051	STR		3-2.0									
36	5	31-10.2	DK5052	STR		31-10.2									
4	5	31-10.2	DK5053E	STR		31-10.2									
67	5	7-8.1	DK5054	1	0-7.0	7-1.1							0-5.0		
112	5	6-1.0	DK5112E	DE16		2-7.1	1-0.1	1-1.0	1-4.2			1-1.2		0-9.2	
8	5	5-0.2	DK5201	16	2-0.0	0-9.0	1-2.0	1-1.2				0-9.2		0-9.2	1-11.2
12	5	6-2.0	DK5238	STR		6-2.0									
3	5	4-9.3	DK5240	STR		4-9.3									
16	5	20-0.3	DK5241	STR		20-0.3									
3	5	4-9.0	DK5242	STR		4-9.0									
18	5	8-7.1	DK5257	16	4-0.0	1-4.2	1-4.3	1-10.0				1-3.2		1-3.2	2-8.1
6	5	4-5.2	DK5301	31		0-6.0	1-7.0	2-4.2				1-1.2		1-1.2	4-0.0
2	5	7-2.1	DK5302	4		0-11.1	0-11.0	3-5.3	0-11.0	0-11.1		0-7.3		0-7.3	6-7.3
12	6	3-6.0	DK6001	STR		3-6.0									
112	5	7-4.3	PA502E	SP04	0-6.0	0-8.0	2-8.0	0-4.3	2-8.0		0-6.0	2-8.0		0-3.1	
16	5	19-8.0	PA503E	STR		19-8.0									
8	5	29-11.0	PA525E	STR		29-11.0									

SPECIFICATIONS					BENDING DIMENSIONS (FEET-INCHES /QUARTER INCH)										
QTY.	SIZE	LENGTH	MARK	TYPE	A	B	C	D	E	F/R	G	H	J	K	O
SPAN 36S															
38	5	40-0.0	DK5001	STR		40-0.0									
4	5	40-0.0	DK5003E	STR		40-0.0									
69	5	7-8.1	DK5054	1	0-7.0	7-1.1							0-5.0		
38	5	34-4.0	DK5055	STR		34-4.0									
4	5	34-4.0	DK5056E	STR		34-4.0									
137	5	13-3.0	DK5057	1	0-7.0	12-8.0							0-5.0		
137	5	12-8.0	DK5058	STR		12-8.0									
274	5	3-8.3	DK5059	STR		3-8.3									
115	5	6-1.0	DK5112E	DE16		2-7.1	1-0.1	1-1.0	1-4.2			1-1.2		0-9.2	
2	5	6-6.0	DK5113E	DE12	0-6.0	1-5.2	1-1.0	0-6.3	0-11.3	1-5.0	0-6.0	0-3.3		0-5.2	
8	5	5-0.2	DK5201	16	2-0.0	0-9.0	1-2.0	1-1.2				0-9.2		0-9.2	1-11.2
6	5	6-2.0	DK5238	STR		6-2.0									
3	5	4-9.0	DK5242	STR		4-9.0									
8	5	20-0.3	DK5243	STR		20-0.3									
3	5	4-8.0	DK5244	STR		4-8.0									
6	5	6-9.0	DK5245	STR		6-9.0									
8	5	21-3.1	DK5246	STR		21-3.1									
18	5	8-7.1	DK5257	16	4-0.0	1-4.2	1-4.3	1-10.0				1-3.2		1-3.2	2-8.1
12	6	3-6.0	DK6001	STR		3-6.0									
115	5	7-4.3	PA502E	SP04	0-6.0	0-8.0	2-8.0	0-4.3	2-8.0		0-6.0	2-8.0		0-3.1	
16	5	19-8.0	PA503E	STR		19-8.0									
2	5	4-1.0	PA510E	DE06		2-10.0	0-5.0	1-1.0			0-7.0	2-10.0	1-0.3		0-6.1
2	5	9-8.0	PA512E	STR		9-8.0									
8	5	32-4.1	PA525E	STR		32-4.1									
8	5	32-4.1	PA525E	STR		32-4.1									

SPECIFICATIONS					BENDING DIMENSIONS (FEET-INCHES /QUARTER INCH)										
QTY.	SIZE	LENGTH	MARK	TYPE	A	B	C	D	E	F/R	G	H	J	K	O
SPAN 37S															
47	5	40-0.0	DK5001	STR		40-0.0									
4	5	40-0.0	DK5003E	STR		40-0.0									
4**	5	13-0.2	DK5007E	T1	0-5.2	2-3.3	3-9.0	2-3.3	3-9.0		0-5.2				
		T0				T0		T0							
		20-2.0			0-5.2	5-10.2	3-9.0	5-10.2	3-9.0		0-5.2				
			**1 SET OF 4												
2	5	10-4.0	DK5008E	SP06	1-0.0	2-8.2	2-1.0	2-8.2	0-5.0	0-5.0	1-0.0	1-11.0	1-11.0	1-11.0	5-11.0
6*	5	7-2.1	DK5009E	DE16		2-7.2	1-7.2	1-1.1	1-10.0			1-6.1		1-0.2	
		T0				T0									
		8-5.0				2-7.2	2-10.1	1-1.1	1-10.0			1-6.1		1-0.2	
			**2 SETS OF 3												
2	5	8-5.1	DK5010E	DE24		2-10.1	1-1.1	0-7.0	1-3.1	2-7.2		0-5.3	2-7.2	0-4.0	2-10.1
47	5	32-8.2	DK5060	STR		32-8.2									
4	5	32-8.2	DK5061E	STR		32-8.2									
81	5	14-8.2	DK5062	1	0-7.0	14-1.2							0-5.0		
53	5	15-6.3	DK5063	1	0-7.0	14-11.3							0-5.0		
64	5	8-3.2	DK5064	1	0-7.0	7-8.2							0-5.0		
10	5	9-11.1	DK5065	1	0-7.0	9-4.1							0-5.0		
81	5	14-1.2	DK5066	STR		14-1.2									
53	5	14-11.3	DK5067	STR		14-11.3									
10	5	9-4.1	DK5068	STR		9-4.1									
162	5	4-9.3	DK5069	STR		4-9.3									
106	5	5-6.0	DK5070	STR		5-6.0									
110	5	6-1.0	DK5112E	DE16		2-7.1	1-0.1	1-1.0	1-4.2			1-1.2		0-9.2	
8	5	5-0.2	DK5201	16	2-0.0	0-9.0	1-2.0	1-1.2				0-9.2		0-9.2	1-11.2
3	5	4-8.0	DK5244	STR		4-8.0									
6	5	6-9.0	DK5245	STR		6-9.0									
8	5	21-3.1	DK5246	STR		21-3.1									
3	5	4-9.0	DK5247	STR		4-9.0									
6	5	8-5.3	DK5248	STR		8-5.3									
8	5	25-6.0	DK5250	STR		25-6.0									
20	5	8-7.1	DK5257	16	4-0.0	1-4.2	1-4.3	1-10.0				1-3.2		1-3.2	2-8.1
6	5	4-5.2	DK5301	31		0-6.0	1-7.0	2-4.2				1-1.2		1-1.2	4-0.0
2	5	7-2.1	DK5302	4		0-11.1	0-11.0	3-5.3	0-11.0	0-11.1		0-7.3		0-7.3	6-7.3
12	6	3-6.0	DK6001	STR		3-6.0									
108	5	7-4.3	PA502E	SP04	0-6.0	0-8.0	2-8.0	0-4.3	2-8.0		0-6.0	2-8.0		0-3.1	
16	5	19-8.0	PA503E	STR		19-8.0									
4	5	10-4.0	PA505E	SP06	1-0.0	2-8.2	2-1.0	2-8.2	0-5.0	0-5.0	1-0.0	1-11.0	1-11.0	1-11.0	5-11.0

UNOFFICIAL WEBSITE COPY

ASTM STANDARD ENGLISH REINFORCING BARS				RECOMMENDED END HOOKS, APPLICABLE TO ALL GRADES				STIRRUP AND TIE HOOKS, APPLICABLE TO ALL GRADES			
	NOMINAL DIMENSIONS				180° HOOKS		90° HOOKS		90° HOOK	135° HOOK	
BAR SIZE	DIAMETER (INCHES)	AREA (INCHES²)	WEIGHT (LBS./FT.)	D	A OR G	J	A OR G	D	A OR G	A OR G	A OR G
3	0.375	0.110	0.376	2¼"	5"	3"	6"	1½"	4"	4"	2½"
4	0.500	0.200	0.668	3"	6"	4"	8"	2"	4½"	4½"	3"
5	0.625	0.310	1.043	3¾"	7"	5"	10"	2½"	6"	5½"	3¾"
6	0.750	0.440	1.502	4½"	8"	6"	1-0"	4½"	1-0"	8"	4½"
7	0.875	0.600	2.044	5¼"	10"	7"	1-2"	5¼"	1-2"	9"	5¼"
8	1.000	0.790	2.670	6"	11"	8"	1-4"	6"	1-4"	10½"	6"
9	1.128	1.000	3.400	9½"	1-3"	11¾"	1-7"				
10	1.270	1.270	4.303	10¾"	1-5"	1-1¼"	1-10"				
11	1.410	1.560	5.313	1-0"	1-7"	1-2¾"	2-0"				
14	1.693	2.250	7.650	1-6¼"	2-3"	1-9¾"	2-7"				
18	2.257	4.000	13.600	2-0"	3-0"	2-4½"	3-5"				

NOTES:

1. FIGURES SHOWN IN CIRCLES REPRESENT BAR BEND TYPES.
2. STANDARD BAR BENDS INCLUDE ONLY THOSE TYPES BELOW, INDICATED AS SUCH.
3. ALL DIMENSIONS OUT-TO-OUT, EXCEPT "A" AND "G" ON STD. 180° AND 135° HOOKS.
4. "J" DIMENSIONS ON 180° HOOKS TO BE SHOWN ONLY WHERE NECESSARY TO RESTRICT HOOK SIZE, OTHERWISE STANDARD 'ACI' HOOKS ARE TO BE USED.
5. WHERE "J" IS NOT SHOWN, "J" WILL BE KEPT EQUAL TO OR LESS THAN "H" ON TYPES 3, 5 AND 22. WHERE "J" CAN EXCEED "H", IT SHALL BE SHOWN.
6. "H" DIMENSIONS OF STIRRUPS TO BE SHOWN AS NEEDED TO FIT WITHIN THE CONCRETE.
7. UNLESS OTHERWISE NOTED, DIAMETER "D" IS THE SAME FOR ALL BENDS AND HOOKS ON A BAR (EXCEPT FOR BEND TYPES 11 AND 13).
8. WHERE SLOPE DIFFERS FROM 45° OFFSET, "H" AND "K" MUST BE SHOWN.
9. WHERE BARS ARE TO BE BENT MORE ACCURATELY THAN STANDARD BENDING TOLERANCES, BENDING DIMENSIONS REQUIRING CLOSER FABRICATION SHOULD HAVE LIMITS INDICATED.
10. FOR RECOMMENDED DIAMETER "D", OF BENDS, HOOKS, ETC., REFER TO TABLE ABOVE, 'CRSI' OR 'ACI' TABLES WHERE APPLICABLE AND REQUIRED.
11. TYPE S1-S6, S11, T1-T3 AND T6-T9 APPLICABLE TO BAR SIZES #3 THROUGH #8.

STANDARD BAR BENDS

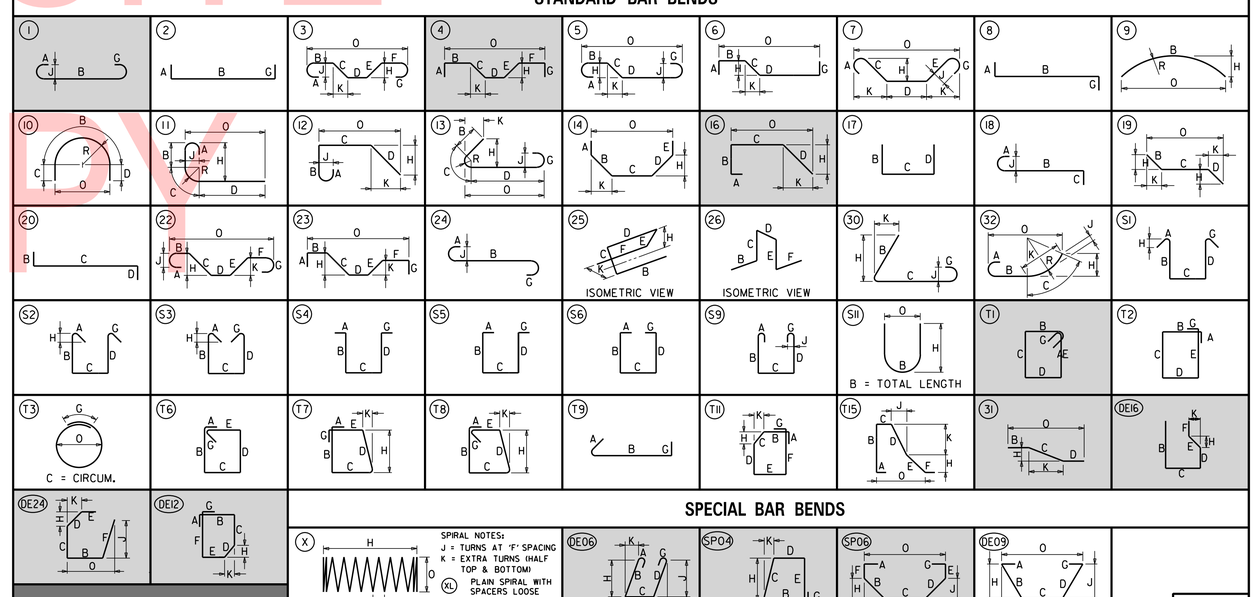

SPECIAL BAR BENDS

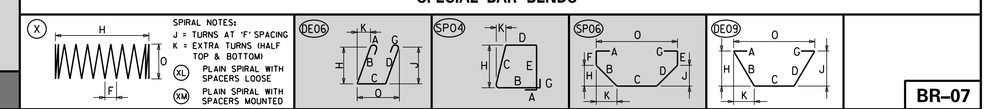

STIRRUP AND TIE HOOKS

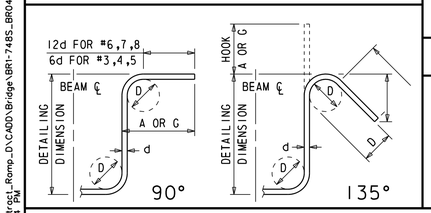

180° AND 90° END HOOKS

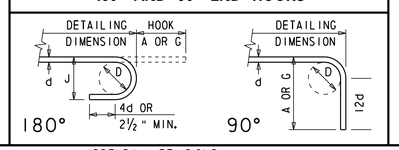

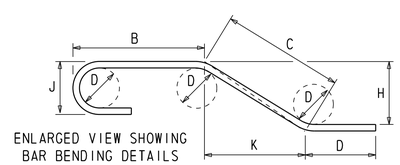

ENLARGED VIEW SHOWING BAR BENDING DETAILS

ADDENDA / REVISIONS

NOT TO SCALE

REHABILITATION OF I-95, 2ND STREET ON-RAMP IMPROVEMENTS

CONTRACT	BRIDGE NO.	1 748S 059
T201907402	DESIGNED BY: D. NIZAMOFF	
COUNTY		
NEW CASTLE	CHECKED BY: W. GESCHREI	

REINFORCEMENT SCHEDULE SUPERSTRUCTURE

BR-07

SECTION WRA

SHEET NO. 150

N:\31987-004\Contract_Ramp_D\CADD\Bridge\BR1-748S_BR04.dgn 8/23/2019 4:32:14 PM

① ANY MARK NUMBER WITH SUFFIX 'E' DENOTES EPOXY COATED REINFORCING STEEL.

② ALL MARK 'LOCATION PREFIXES' SHALL CONSIST OF TWO LETTERS AND ARE AS FOLLOWS: AB = ABUTMENT, AS = APPROACH SLAB, BC = BOX CULVERT, BW = BACKWALL, CL = COLUMN, DK = DECK, DL = DOWEL, FT = FOOTING, HW = HEADWALL, MS = MISC. BARS, PA = PARAPET, PR = PIER, SC = SHEETPILE CAP, SL = SLAB, SS = SLEEPER SLAB, TW = TOEWALL, WL = WALL (UNIQUE LOCATION), WW = WINGWALL

SPECIFICATIONS					BENDING DIMENSIONS (FEET-INCHES /QUARTER INCH)										
QTY.	SIZE	LENGTH	MARK	TYPE	A	B	C	D	E	F/R	G	H	J	K	O
SPAN 37S CONTINUED															
6•	5	7-4.2	PA508E	DE09	1-0.0	2-8.0	1-0.2	2-8.0				2-8.0	2-8.0	0-3.1	1-3.3
		T0					T0								T0
		8-7.2			1-0.0	2-8.0	2-3.2	2-8.0				2-8.0	2-8.0	0-3.1	2-6.3
			••2 SETS OF 3												
2	5	6-11.3	PA509E	DE09	1-0.0	1-0.1	2-3.2	2-8.0				1-0.1	2-8.0	0-1.1	2-4.3
2	5	9-8.0	PA512E	STR		9-8.0									
8	5	30-8.3	PA526E	STR		30-8.3									
SPAN 38S															
65	5	40-0.0	DK5001	STR		40-0.0									
4	5	40-0.0	DK5003E	STR		40-0.0									
43	5	33-3.1	DK5071	STR		33-3.1									
4	5	33-3.1	DK5072E	STR		33-3.1									
22	5	31-11.2	DK5073	STR		31-11.2									
45	5	20-2.1	DK5074	1	0-7.0	19-7.1							0-5.0		
38	5	21-7.2	DK5075	1	0-7.0	21-0.2							0-5.0		
52	5	23-7.1	DK5076	1	0-7.0	23-0.1							0-5.0		
68	5	8-2.3	DK5077	1	0-7.0	7-7.3							0-5.0		
45	5	19-7.1	DK5078	STR		19-7.1									
38	5	21-0.2	DK5079	STR		21-0.2									
52	5	23-0.1	DK5080	STR		23-0.1									
166	5	4-3.1	DK5081	STR		4-3.1									
104	5	5-1.1	DK5082	STR		5-1.1									
115	5	6-1.0	DK5112E	DE16		2-7.1	1-0.1	1-1.0	1-4.2			1-1.2		0-9.2	
8	5	5-0.2	DK5201	16	2-0.0	0-9.0	1-2.0	1-1.2				0-9.2		0-9.2	1-11.2
3	5	4-9.0	DK5247	STR		4-9.0									
9	5	5-11.0	DK5249	STR		5-11.0									
8	5	25-8.3	DK5251	STR		25-8.3									
3	5	4-7.2	DK5252	STR		4-7.2									
9	5	8-1.2	DK5253	STR		8-1.2									
8	5	33-0.0	DK5255	STR		33-0.0									
36	5	8-7.1	DK5257	16	4-0.0	1-4.2	1-4.3	1-10.0				1-3.2		1-3.2	2-8.1
12	6	3-6.0	DK6001	STR		3-6.0									
115	5	7-4.3	PA502E	SP04	0-6.0	0-8.0	2-8.0	0-4.3	2-8.0		0-6.0	2-8.0		0-3.1	
16	5	19-8.0	PA503E	STR		19-8.0									
8	5	31-3.1	PA527E	STR		31-3.1									

SPECIFICATIONS					BENDING DIMENSIONS (FEET-INCHES /QUARTER INCH)										
QTY.	SIZE	LENGTH	MARK	TYPE	A	B	C	D	E	F/R	G	H	J	K	O
SPAN 39S															
93	5	40-0.0	DK5001	STR		40-0.0									
4	5	40-0.0	DK5003E	STR		40-0.0									
72	5	8-3.2	DK5064	1	0-7.0	7-8.2							0-5.0		
47	5	35-4.3	DK5083	STR		35-4.3									
4	5	35-4.3	DK5084E	STR		35-4.3									
34	5	34-0.0	DK5085	STR		33-11.0									
12	5	32-0.1	DK5086	STR		32-0.1									
19	5	34-7.0	DK5087	1	0-7.0	34-0.0							0-5.0		
27	5	33-1.1	DK5088	1	0-7.0	32-6.1							0-5.0		
26	5	31-6.3	DK5089	1	0-7.0	30-11.3							0-5.0		
27	5	30-1.0	DK5090	1	0-7.0	29-6.0							0-5.0		
24	5	28-6.2	DK5091	1	0-7.0	27-11.2							0-5.0		
21	5	27-2.1	DK5092	1	0-7.0	26-7.1							0-5.0		
144	5	4-6.3	DK5093	STR		4-6.3									
19	5	34-0.0	DK5094	STR		34-0.0									
27	5	32-6.1	DK5095	STR		32-6.1									
26	5	30-11.3	DK5096	STR		30-11.3									
27	5	29-6.0	DK5097	STR		29-6.0									
24	5	27-11.2	DK5098	STR		27-11.2									
21	5	26-7.1	DK5099	STR		26-7.1									
128	5	5-9.0	DK5100	STR		5-9.0									
7	5	9-7.0	DK5102E	17		4-3.0	1-1.0	4-3.0							
5	5	8-7.3	DK5103E	DE16		4-3.0	1-0.1	2-0.0	1-4.2			1-1.2		0-9.2	
3	5	6-8.1	DK5104E	T11	0-10.0	1-1.1	1-4.2	0-3.0	3-1.2			0-9.2		1-1.2	
10	5	13-3.0	DK5105	STR		13-3.0									
3	5	7-6.0	DK5106	16	2-9.0	1-4.3	1-3.1	2-1.0				1-5.3		1-5.3	2-9.0
22	5	9-10.2	DK5107	16	3-11.2	1-4.3	2-6.3	1-11.2				1-4.2		1-4.2	3-11.1
3	5	4-9.2	DK5108	STR		4-9.2									
12	5	8-8.2	DK5109	STR		8-8.2									
1	5	31-0.0	DK5110	STR		31-0.0									
120	5	6-1.0	DK5112E	DE16		2-7.1	1-0.1	1-1.0	1-4.2			1-1.2		0-9.2	
2	5	6-6.0	DK5113E	DE12	0-6.0	1-5.2	1-1.0	0-6.3	0-11.3	1-5.0	0-6.0	0-3.3		0-5.2	
8	5	5-0.2	DK5201	16	2-0.0	0-9.0	1-2.0	1-1.2				0-9.2		0-9.2	1-11.2
3	5	4-7.2	DK5252	STR		4-7.2									
12	5	6-3.0	DK5254	STR		6-3.0									
8	5	33-4.1	DK5256	STR		33-4.1									
27	5	8-7.1	DK5257	16	4-0.0	1-4.2	1-4.3	1-10.0				1-3.2		1-3.2	2-8.1
6	5	4-5.2	DK5301	31		0-6.0	1-7.0	2-4.2				1-1.2		1-1.2	4-0.0
2	5	7-2.1	DK5302	4		0-11.1	0-11.0	3-5.3	0-11.0	0-11.1		0-7.3		0-7.3	6-7.3

SPECIFICATIONS					BENDING DIMENSIONS (FEET-INCHES /QUARTER INCH)										
QTY.	SIZE	LENGTH	MARK	TYPE	A	B	C	D	E	F/R	G	H	J	K	O
SPAN 39S CONTINUED															
12	6	3-6.0	DK6001	STR		3-6.0									
8	5	29-8.0	PA501E	STR		29-8.0									
126	5	7-4.3	PA502E	SP04	0-6.0	0-8.0	2-8.0	0-4.3	2-8.0		0-6.0	2-8.0		0-3.1	
8	5	19-8.0	PA503E	STR		19-8.0									
2	5	4-11.0	PA510E	DE06		2-10.0	0-5.0	1-1.0			0-7.0	2-10.0	1-0.3		0-6.1
4	5	9-8.0	PA512E	STR		9-8.0									
8	5	23-5.0	PA528E	STR		23-5.0									
7	5	6-5.0	PA529E	17		2-8.0	1-1.0	2-8.0							
1	5	9-4.0	PA535E	16		1-1.0	5-11.3	2-3.1				2-3.1		0-1.3	6-1.2
3•	5	8-2.3	PA536E	16		1-1.0	4-10.2	2-3.1				2-3.1		0-1.3	5-0.1
		T0					T0								T0
		8-6.3				1-1.0	5-2.2	2-3.1				2-3.1		0-1.3	5-4.1
			••1 SET OF 3												
1	5	6-3.2	PA537E	16			5-1.1	1-2.1				1-2.1		0-0.3	5-2.0
3•	5	5-8.3	PA538E	16			4-6.2	1-2.1				1-2.1		0-0.3	4-7.1
		T0					T0								T0
		5-9.2					4-7.1	1-2.1				1-2.1		0-0.3	4-9.2
			••1 SET OF 3												

UNOFFICIAL WEBSITE COPY

ASTM STANDARD ENGLISH REINFORCING BARS				RECOMMENDED END HOOKS, APPLICABLE TO ALL GRADES				STIRRUP AND TIE HOOKS, APPLICABLE TO ALL GRADES			
	NOMINAL DIMENSIONS				180° HOOKS		90° HOOKS		90° HOOK	135° HOOK	
BAR SIZE	DIAMETER (INCHES)	AREA (INCHES²)	WEIGHT (LBS./FT.)	D	A OR G	J	A OR G	D	A OR G	A OR G	A OR G
3	0.375	0.110	0.376	2¼"	5"	3"	6"	1½"	4"	4"	2½"
4	0.500	0.200	0.668	3"	6"	4"	8"	2"	4½"	4½"	3"
5	0.625	0.310	1.043	3¾"	7"	5"	10"	2½"	6"	5½"	3¾"
6	0.750	0.440	1.502	4½"	8"	6"	1-0"	4½"	1-0"	8"	4½"
7	0.875	0.600	2.044	5¼"	10"	7"	1-2"	5¼"	1-2"	9"	5¼"
8	1.000	0.790	2.670	6"	11"	8"	1-4"	6"	1-4"	10½"	6"
9	1.128	1.000	3.400	9½"	1-3"	11¾"	1-7"				
10	1.270	1.270	4.303	10¾"	1-5"	1-1¼"	1-10"				
11	1.410	1.560	5.313	1-0"	1-7"	1-2¾"	2-0"				
14	1.693	2.250	7.650	1-6¼"	2-3"	1-9¾"	2-7"				
18	2.257	4.000	13.600	2-0"	3-0"	2-4½"	3-5"				

NOTES:

1. FIGURES SHOWN IN CIRCLES REPRESENT BAR BEND TYPES.
2. STANDARD BAR BENDS INCLUDE ONLY THOSE TYPES BELOW, INDICATED AS SUCH.
3. ALL DIMENSIONS OUT-TO-OUT, EXCEPT "A" AND "G" ON STD. 180° AND 135° HOOKS.
4. "J" DIMENSIONS ON 180° HOOKS TO BE SHOWN ONLY WHERE NECESSARY TO RESTRICT HOOK SIZE, OTHERWISE STANDARD 'ACI' HOOKS ARE TO BE USED.
5. WHERE "J" IS NOT SHOWN, "J" WILL BE KEPT EQUAL TO OR LESS THAN "H" ON TYPES 3, 5 AND 22. WHERE "J" CAN EXCEED "H", IT SHALL BE SHOWN.
6. "H" DIMENSIONS OF STIRRUPS TO BE SHOWN AS NEEDED TO FIT WITHIN THE CONCRETE.
7. UNLESS OTHERWISE NOTED, DIAMETER "D" IS THE SAME FOR ALL BENDS AND HOOKS ON A BAR (EXCEPT FOR BEND TYPES 11 AND 13).
8. WHERE SLOPE DIFFERS FROM 45° OFFSET, "H" AND "K" MUST BE SHOWN.
9. WHERE BARS ARE TO BE BENT MORE ACCURATELY THAN STANDARD BENDING TOLERANCES, BENDING DIMENSIONS REQUIRING CLOSER FABRICATION SHOULD HAVE LIMITS INDICATED.
10. FOR RECOMMENDED DIAMETER "D", OF BENDS, HOOKS, ETC., REFER TO TABLE ABOVE, 'CRSI' OR 'ACI' TABLES WHERE APPLICABLE AND REQUIRED.
11. TYPE S1-S6, S11, T1-T3 AND T6-T9 APPLICABLE TO BAR SIZES #3 THROUGH #8.

STANDARD BAR BENDS

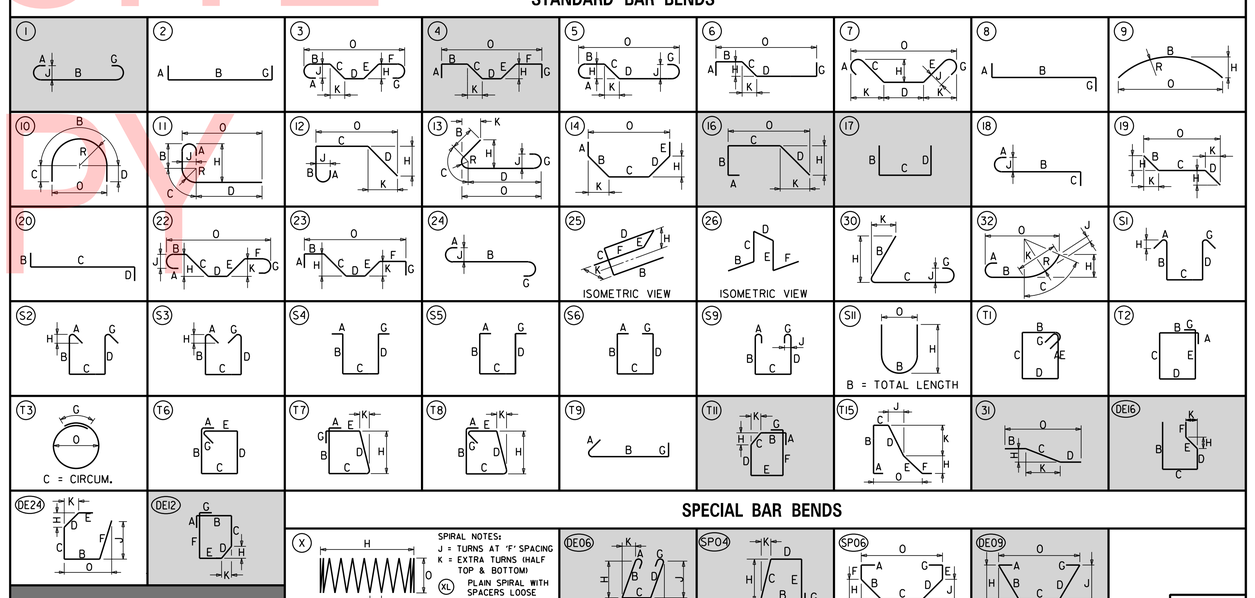

SPECIAL BAR BENDS

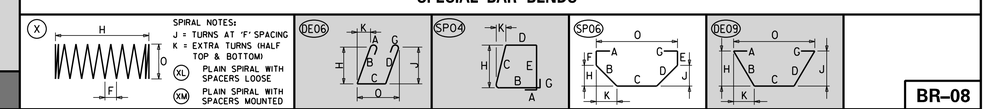

STIRRUP AND TIE HOOKS

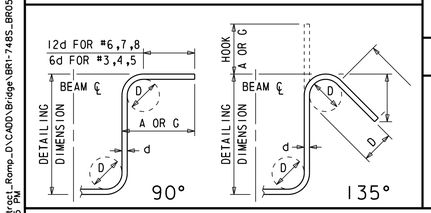

180° AND 90° END HOOKS

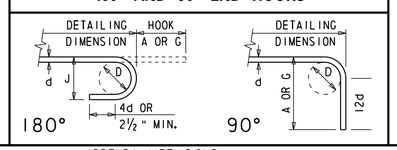

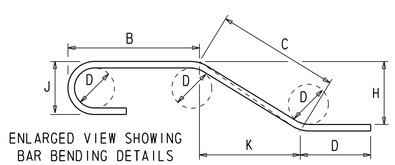

ADDENDA / REVISIONS

NOT TO SCALE

REHABILITATION OF I-95, 2ND STREET ON-RAMP IMPROVEMENTS

CONTRACT	BRIDGE NO.	1 748S 059
T201907402	DESIGNED BY: D. NIZAMOFF	
COUNTY		
NEW CASTLE	CHECKED BY: W. GESCHREI	

REINFORCEMENT SCHEDULE SUPERSTRUCTURE

BR-08

SECTION WRA

SHEET NO. 151

N:\31987-004\Contract_Ramp_D\CADD\Bridge\BR1-748S_BR05.dgn 8/23/2019 4:33:15 PM

(1) ANY MARK NUMBER WITH SUFFIX 'E' DENOTES EPOXY COATED REINFORCING STEEL.

(2) ALL MARK 'LOCATION PREFIXES' SHALL CONSIST OF TWO LETTERS AND ARE AS FOLLOWS: AB = ABUTMENT, AS = APPROACH SLAB, BC = BOX CULVERT, BW = BACKWALL, CL = COLUMN, DK = DECK, DL = DOWEL, FT = FOOTING, HW = HEADWALL, MS = MISC. BARS, PA = PARAPET, PR = PIER, SC = SHEETPILE CAP, SL = SLAB, SS = SLEEPER SLAB, TW = TOEWALL, WL = WALL (UNIQUE LOCATION), WW = WINGWALL

SPECIFICATIONS					BENDING DIMENSIONS (FEET-INCHES /QUARTER INCH)									
QTY.	SIZE	LENGTH	MARK	TYPE	A	B	C	D	E	F/R	G	H	J	K	O
65	5	5-5.2	AS501E	SP03		2-1.0	1-1.0	1-3.2	1-0.0			0-9.3	0-6.2		
25	5	34-11.4	AS502E	STR	34-0.3										
		35-9.0			35-9.0										
37	5	7-10.2	AS503E	DE16		2-11.0	1-6.2	0-5.2	0-11.2	2-0.0		0-8.0		0-8.0	
37	5	6-8.2	AS504E	17		2-11.0	0-10.2	2-11.0							
37	5	20-8.3	AS505E	STR	18-4.0										
		23-1.2			23-1.2										
		34-11.4													
50	5	6-6.3	AS506E	17		2-11.0	0-8.3	2-11.0							
25	6	34-11.4	AS601E	STR	34-0.3										
		35-9.0			35-9.0										
2	6	34-7.2	AS602E	STR	34-7.2										
73	9	20-8.3	AS901E	STR	18-4.0										
		23-1.2			23-1.2										
37	5	7-8.0	SS501E	T1	0-5.2	1-6.0	1-10.0	1-6.0	1-10.0		0-5.2				
22	5	35-9.3	SS502E	STR	35-6.2										
		36-1.0			36-1.0										
5	5	35-9.0	SS503E	STR	35-9.0										
16	5	7-10.1	SS504E	SP03		3-5.2	1-1.0	2-2.3	1-1.0			0-11.2		0-7.3	
74	8	7-2.0	SS801E	STR	7-2.0										
65	5	7-6.3	PA501E	SP04	0-6.0	0-8.0	2-9.0	0-4.3	2-9.0		0-6.0	2-9.0		0-3.1	
8	5	23-1.2	PA502E	STR	23-1.2										
8	5	18-4.0	PA503E	STR	18-4.0										
16	5	7-6.3	PA504E	SP04	0-6.0	0-8.0	2-9.0	0-4.3	2-9.0		0-6.0	2-9.0		0-3.1	
16	5	4-2.0	PA505E	STR	4-2.0										

SPECIFICATIONS					BENDING DIMENSIONS (FEET-INCHES /QUARTER INCH)										
QTY.	SIZE	LENGTH	MARK	TYPE	A	B	C	D	E	F/R	G	H	J	K	O

SPECIFICATIONS					BENDING DIMENSIONS (FEET-INCHES /QUARTER INCH)										
QTY.	SIZE	LENGTH	MARK	TYPE	A	B	C	D	E	F/R	G	H	J	K	O

UNOFFICIAL WEBSITE COPY

ASTM STANDARD ENGLISH REINFORCING BARS

BAR SIZE	NOMINAL DIMENSIONS: DIAMETER (INCHES)	AREA (INCHES²)	WEIGHT (LBS./FT.)	RECOMMENDED END HOOKS, APPLICABLE TO ALL GRADES: 180° HOOKS D	180° HOOKS A OR G	180° HOOKS J	90° HOOKS A OR G	STIRRUP AND TIE HOOKS, APPLICABLE TO ALL GRADES: 90° HOOK D	90° HOOK A OR G	135° HOOK A OR G	135° HOOK A OR G
3	0.375	0.110	0.376	2¼"	5"	3"	6"	1½"	4"	4"	2½"
4	0.500	0.200	0.668	3"	6"	4"	8"	2"	4½"	4½"	3"
5	0.625	0.310	1.043	3¾"	7"	5"	10"	2½"	6"	5½"	3¾"
6	0.750	0.440	1.502	4½"	8"	6"	1-0"	4½"	1-0"	8"	4½"
7	0.875	0.600	2.044	5¼"	10"	7"	1-2"	5¼"	1-2"	9"	5¼"
8	1.000	0.790	2.670	6"	11"	8"	1-4"	6"	1-4"	10½"	6"
9	1.128	1.000	3.400	9½"	1-3"	11¾"	1-7"				
10	1.270	1.270	4.303	10¾"	1-5"	1-1¼"	1-10"				
11	1.410	1.560	5.313	1-0"	1-7"	1-2¾"	2-0"				
14	1.693	2.250	7.650	1-6¼"	2-3"	1-9¾"	2-7"				
18	2.257	4.000	13.600	2-0"	3-0"	2-4½"	3-5"				

NOTES:

1. FIGURES SHOWN IN CIRCLES REPRESENT BAR BEND TYPES.
2. STANDARD BAR BENDS INCLUDE ONLY THOSE TYPES BELOW, INDICATED AS SUCH.
3. ALL DIMENSIONS OUT-TO-OUT, EXCEPT "A" AND "G" ON STD. 180° AND 135° HOOKS.
4. "J" DIMENSIONS ON 180° HOOKS TO BE SHOWN ONLY WHERE NECESSARY TO RESTRICT HOOK SIZE, OTHERWISE STANDARD 'ACI' HOOKS ARE TO BE USED.
5. WHERE "J" IS NOT SHOWN, "J" WILL BE KEPT EQUAL TO OR LESS THAN "H" ON TYPES 3, 5 AND 22. WHERE "J" CAN EXCEED "H", IT SHALL BE SHOWN.
6. "H" DIMENSIONS OF STIRRUPS TO BE SHOWN AS NEEDED TO FIT WITHIN THE CONCRETE.
7. UNLESS OTHERWISE NOTED, DIAMETER "D" IS THE SAME FOR ALL BENDS AND HOOKS ON A BAR (EXCEPT FOR BEND TYPES 11 AND 13).
8. WHERE SLOPE DIFFERS FROM 45° OFFSET, "H" AND "K" MUST BE SHOWN.
9. WHERE BARS ARE TO BE BENT MORE ACCURATELY THAN STANDARD BENDING TOLERANCES, BENDING DIMENSIONS REQUIRING CLOSER FABRICATION SHOULD HAVE LIMITS INDICATED.
10. FOR RECOMMENDED DIAMETER "D", OF BENDS, HOOKS, ETC., REFER TO TABLE ABOVE, 'CRSI' OR 'ACI' TABLES WHERE APPLICABLE AND REQUIRED.
11. TYPE S1-S6, S11, T1-T3 AND T6-T9 APPLICABLE TO BAR SIZES #3 THROUGH #8.

STANDARD BAR BENDS

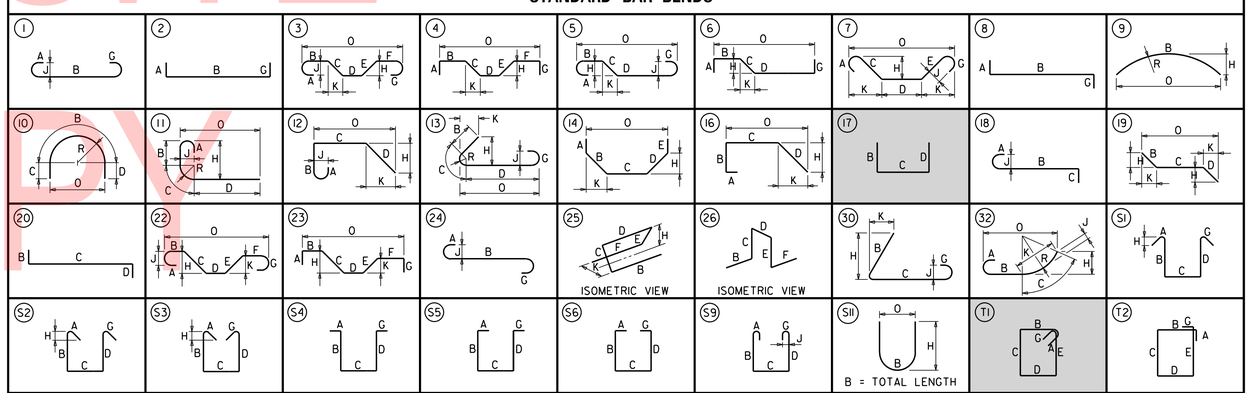

SPECIAL BAR BENDS

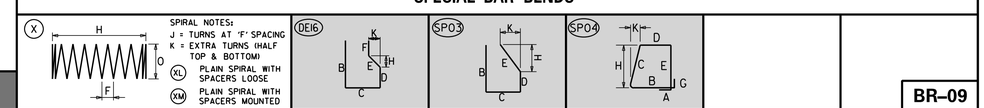

STIRRUP AND TIE HOOKS

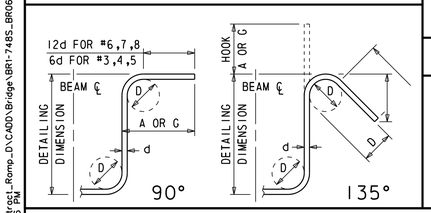

180° AND 90° END HOOKS

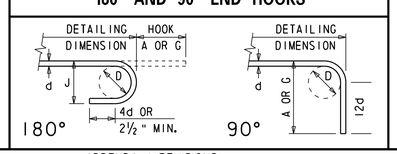

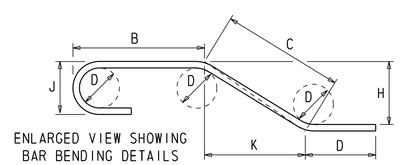

ADDENDA / REVISIONS

NOT TO SCALE

REHABILITATION OF I-95, 2ND STREET ON-RAMP IMPROVEMENTS

CONTRACT	BRIDGE NO.	1 748S 059
T201907402	DESIGNED BY: D. NIZAMOFF	
COUNTY		
NEW CASTLE	CHECKED BY: W. GESCHREI	

REINFORCEMENT SCHEDULE APPROACH SLAB

BR-09

SECTION: WRA

SHEET NO. 152

N:\31987-004\Contract_Ramp_D\CADD\Bridge\BR1-748S_BR06.dgn 8/23/2019 4:32:16 PM

BORING: 17B-R1 | **DATE DRILLED:** 7/17/2017
STATION: 1300+93.55 | **OFFSET:** 57.60' LT | **ELEVATION:** 35.0' | **NORTHING:** 633606.0000 | **EASTING:** 615080.0000
COMMENTS: N/A

SAMPLE INFORMATION

NO.	DEPTH	BLOWS /6"	DESCRIPTION	CLASS /G.I.	REMARKS
1	1.0' 2.0'		MOIST BROWN FINE GRAVELLY COARSE SAND W/SOME FINE SAND AND SILT.	A-1-b	
2	2.0' 4.0'	10 8 6 6	MOIST STIFF BROWN COARSE SANDY FINE GRAVELLY SILT W/SOME FINE SAND.	A-4(0)	
3	4.0' 6.0'	2 4 6 8	WET STIFF BROWN COARSE SANDY CLAY W/SOME FINE SAND, FINE GRAVEL AND SILT.	A-6(3)	
4	6.0' 8.0'	6 8 8 9	WET STIFF BROWN SILTY CLAY W/TRACE FINE TO COARSE SAND AND FINE GRAVEL.	A-6(9)	
5	8.0' 10.0'	2 2 4 5	WET FIRM BROWN SILT W/SOME CLAY, TRACE OF COARSE TO FINE SAND.	A-4(2)	
6	10.0' 12.0'	3 3 4 4	SATURATED FIRM BROWN SILTY CLAY W/TRACE COARSE TO FINE SAND.	A-6(14)	
7	12.0' 14.0'	3 4 4 4	SATURATED FIRM BROWN CLAYEY SILT W/TRACE COARSE TO FINE SAND.	A-4(11)	
8	14.0' 16.0'	3 3 6 7	SATURATED STIFF BROWN SILT W/TRACE FINE TO COARSE SAND.	A-4(0)	
9	16.0' 18.0'	4 9 11 16	SATURATED VERY STIFF GRAY CLAYEY SILT W/TRACE FINE TO COARSE SAND.	A-4(10)	
10	18.0' 20.0'	4 7 12 22	SATURATED VERY STIFF GRAY CLAYEY SILT W/SOME COARSE TO FINE SAND AND FINE GRAVEL.	A-4(2)	
11	24.0' 26.0'	3 6 6 6	SATURATED STIFF GRAY SILTY CLAY W/SOME FINE SAND, TRACE OF COARSE SAND AND FINE GRAVEL.	A-6(7)	
12	29.0' 31.0'	3 7 7 9	SATURATED STIFF GRAY COARSE SANDY CLAY W/SOME FINE SAND AND SILT, TRACE OF FINE GRAVEL.	A-6(3)	
13	34.0' 36.0'	6 6 13 42	SATURATED MEDIUM DENSE GRAY SILTY FINE TO COARSE SAND AND FINE GRAVEL.	A-2-4(0)	
14	39.0' 41.0'	12 16 50/2	SATURATED VERY DENSE GRAY SILTY FINE SAND AND FINE GRAVEL W/SOME COARSE SAND.	A-2-4(0)	
15	44.0' 46.0'	50/2	NO SIEVE ANALYSIS - INDICATION OF SATURATED VERY DENSE GRAY SILTY FINE TO COARSE SAND W/TRACE FINE GRAVEL.	A-2-4(0)	
16	47.5' 49.5'	10 50/5	SATURATED VERY STIFF GRAY CLAYEY FINE TO COARSE SAND W/SOME SILT, TRACE OF FINE GRAVEL.	A-2-7(0)	
	49.5' 72.0'		END BORING		

BORING: 17B-R2 | **DATE DRILLED:** 7/6/2017
STATION: 1301+73.06 | **OFFSET:** 60.89' LT | **ELEVATION:** 37.8' | **NORTHING:** 633688.0000 | **EASTING:** 615079.0000
COMMENTS: N/A

SAMPLE INFORMATION

NO.	DEPTH	BLOWS /6"	DESCRIPTION	CLASS /G.I.	REMARKS
1	0.0' 2.0'		NO RECOVERY		
2	2.0' 4.0'	17 22 16 11	MOIST HARD BROWN FINE GRAVELLY SILT W/SOME COARSE SAND, TRACE OF FINE SAND AND CLAY.	A-4(0)	
3	4.0' 6.0'	8 13 11 13	MOIST HARD BROWN FINE GRAVELLY SILT W/SOME COARSE SAND, TRACE OF FINE SAND AND CLAY.	A-4(4)	
4	6.0' 8.0'	15 9 11 19	MOIST VERY STIFF GRAY CLAYEY SILT W/SOME COARSE TO FINE SAND AND FINE GRAVEL.	A-4(3)	
5	8.0' 10.0'	7 7 7 6	MOIST VERY STIFF BROWN CLAYEY COARSE SANDY SILT W/SOME FINE SAND, TRACE OF FINE GRAVEL.	A-4(1)	
6	10.0' 12.0'	6 7 11 15	MOIST STIFF GRAY SILT W/SOME COARSE TO FINE SAND AND CLAY, TRACE OF FINE GRAVEL.	A-4(0)	
7	12.0' 14.0'	1 1 1 1	MOIST VERY STIFF BROWN FINE SANDY SILT W/SOME COARSE SAND AND FINE GRAVEL. PH SAMPLE	A-4(0)	

BORING: 17B-R2 CONT.

SAMPLE INFORMATION

NO.	DEPTH	BLOWS /6"	DESCRIPTION	CLASS /G.I.	REMARKS
8	14.0' 16.0'	3 3 4 5	SATURATED FIRM GRAY SILTY CLAY W/TRACE FINE TO COARSE SAND.	A-6(13)	
9	16.0' 18.0'	4 5 6 5	SATURATED STIFF GRAY CLAYEY SILT W/TRACE FINE TO COARSE SAND AND FINE GRAVEL.	A-4(7)	
10	18.0' 20.0'	3 3 4 5	SATURATED FIRM GRAY CLAYEY SILT W/TRACE COARSE TO FINE SAND.	A-4(5)	
11	24.0' 26.0'	5 2 3 3	SATURATED FIRM GRAY CLAYEY SILT W/SOME COARSE TO FINE SAND AND FINE GRAVEL.	A-4(2)	
12	29.0' 31.0'	3 13 6 6	SATURATED VERY STIFF GRAY CLAYEY SILT W/SOME COARSE TO FINE SAND, TRACE OF FINE GRAVEL.	A-4(5)	
13	34.0' 36.0'	1 2 3 4	SATURATED LOOSE GRAY COARSE SAND W/SOME FINE SAND AND FINE GRAVEL, TRACE OF SILT.	A-1-b	
14	39.0' 41.0'	3 8 14 18	SATURATED MEDIUM DENSE GRAY COARSE SAND W/SOME FINE GRAVEL AND SILT, TRACE OF FINE SAND.	A-1-b	
15	44.0' 45.5'	24 48 50/3	SATURATED VERY DENSE GRAY COARSE TO FINE SAND W/SOME SILT, TRACE OF FINE GRAVEL.	A-4(0)	
R-1	45.5' 46.0' 50.5'		GRANITE	A-1-b	
R-2	50.5' 55.5'		BROWN CLAYEY DECOMPOSED ROCK.	A-1-b	
	55.5' 72.0'		END BORING		

BORING: 17B-R3 | **DATE DRILLED:** 6/27/2017
STATION: 1302+17.46 | **OFFSET:** 64.82' LT | **ELEVATION:** 38.5' | **NORTHING:** 633734.0000 | **EASTING:** 615078.0000
COMMENTS: N/A

SAMPLE INFORMATION

NO.	DEPTH	BLOWS /6"	DESCRIPTION	CLASS /G.I.	REMARKS
1	0.5' 2.0'		MOIST BROWN FINE GRAVELLY COARSE SAND W/SOME FINE SAND AND SILT.	A-1-b	
2	2.0' 4.0'	2 2 3 2	MOIST LOOSE BROWN COARSE SANDY FINE GRAVEL W/SOME FINE SAND AND SILT.	A-1-b	
3	4.0' 6.0'	17 19 5 5	MOIST VERY STIFF BROWN CLAYEY COARSE SANDY SILT W/SOME FINE SAND, TRACE OF FINE GRAVEL.	A-4(2)	
4	6.0' 8.0'	11 8 8 9	MOIST STIFF BROWN FINE TO COARSE SANDY SILT W/SOME CLAY, TRACE OF FINE GRAVEL.	A-4(0)	
5	8.0' 10.0'	1 5 6 7	MOIST MEDIUM DENSE BROWN SILTY COARSE TO FINE SAND W/SOME FINE GRAVEL.	A-1-b	
6	10.0' 12.0'	5 6 16 6	SATURATED VERY STIFF BROWN SILTY CLAY W/TRACE FINE TO COARSE SAND.	A-6(13)	
7	12.0' 14.0'	WR WR 2 1	SATURATED SOFT GRAY CLAYEY COARSE SANDY SILT W/SOME FINE SAND, TRACE OF FINE GRAVEL.	A-4(1)	
8	14.0' 16.0'	1 2 3 4	SATURATED FIRM GRAY CLAYEY SILT W/TRACE FINE TO COARSE SAND.	A-4(12)	
9	16.0' 18.0'	5 5 7 9	SATURATED STIFF GRAY CLAYEY SILT W/TRACE FINE TO COARSE SAND.	A-4(8)	
10	18.0' 20.0'	5 6 6 7	NO RECOVERY		
11	24.0' 26.0'	1 3 5 7	SATURATED FIRM GRAY SILTY CLAY W/SOME COARSE TO FINE SAND AND FINE GRAVEL.	A-6(7)	
12	29.0' 31.0'	6 7 9 13	SATURATED MEDIUM DENSE GRAY CLAYEY COARSE TO FINE SAND W/SOME FINE GRAVEL AND SILT.	A-2-4	
13	34.0' 36.0'	1 6 20 8	SATURATED MEDIUM DENSE BROWN FINE GRAVELLY COARSE SAND W/SOME FINES AND AND SILT.	A-1-b	
14	39.0' 39.5'	22 55/3	SATURATED VERY DENSE GRAY CLAYEY COARSE SAND AND FINE GRAVEL W/SOME FINE SAND AND SILT.	A-2-6(0)	

BORING: 17B-R3 CONT.

SAMPLE INFORMATION

NO.	DEPTH	BLOWS /6"	DESCRIPTION	CLASS /G.I.	REMARKS
R-1	44.5'		GRANITE	A-2-6(0)	
R-2	44.5' 49.5'		GRANITE	A-2-6(0)	
	49.5' 72.0'		END BORING		

BORING: 17B-R4 | **DATE DRILLED:** 6/20/2017
STATION: 1302+49.02 | **OFFSET:** 65.10' LT | **ELEVATION:** 38.5' | **NORTHING:** 633767.0000 | **EASTING:** 615081.0000
COMMENTS: N/A

SAMPLE INFORMATION

NO.	DEPTH	BLOWS /6"	DESCRIPTION	CLASS /G.I.	REMARKS
1	2.0' 4.0'	50/2	NO RECOVERY		
2	4.0' 6.0'	8 9 13 11	MOIST MEDIUM DENSE BROWN CLAYEY FINE GRAVEL W/SOME COARSE TO FINE SAND.	A-4(2)	
3	6.0' 8.0'	22 16 17 14	MOIST DENSE BROWN CLAYEY COARSE SAND W/ SOME FINE SAND, FINE GRAVEL AND SILT.	A-2-4(0)	
4	8.0' 10.0'	5 6 5 7	MOIST STIFF BROWN FINE SANDY FINE GRAVELLY SILT W/SOME COARSE SAND.	A-4(0)	
5	10.0' 12.0'	5 6 6 8	MOIST MEDIUM DENSE BROWN COARSE SANDY FINE GRAVEL W/SOME FINE SAND AND SILT.	A-1-b	
6	12.0' 14.0'	1 2 1 2	pH SAMPLE	A-1-b	
7	14.0' 16.0'	2 3 4 3	WET FIRM BROWN CLAYEY SILT W/TRACE FINE TO COARSE SAND AND FINE GRAVEL.	A-4(5)	
8	16.0' 18.0'	8 5 7 6	WET STIFF GRAY CLAYEY SILT W/TRACE FINE TO COARSE SAND AND FINE GRAVEL.	A-4(7)	
9	18.0' 20.0'	4 4 4 4	WET FIRM GRAY SILTY CLAY W/SOME FINE SAND, TRACE OF COARSE SAND.	A-6(12)	
10	24.0' 26.0'	50/2	WET HARD GRAY SILTY CLAY W/SOME FINE TO COARSE SAND.	A-6(7)	
11	28.0' 30.0'	11 13 12 15	SATURATED VERY STIFF BROWN FINE SANDY CLAY W/SOME COARSE SAND AND SILT.	A-7-5(6)	
12	34.0' 36.0'	13 16 18 22	SATURATED HARD BROWN COARSE TO FINE SANDY CLAY W/SOME SILT.	A-7-5(1)	
13	38.0' 40.0'	50/2	SATURATED HARD BROWN FINE TO COARSE SANDY SILT.	A-4(0)	
14	44.0' 46.0'	50/2	SATURATED VERY DENSE BROWN SILTY FINE TO COARSE SAND AND FINE GRAVEL.	A-2-4(0)	
15	48.0' 50.0'	50/2	SATURATED DENSE BROWN SILTY FINE TO COARSE SAND W/TRACE FINE GRAVEL.	A-2-4(0)	
	50.0' 74.0'		END BORING		

UNOFFICIAL WEBSITE COPY

ADDENDA / REVISIONS

NOT TO SCALE

REHABILITATION OF I-95, 2ND STREET ON-RAMP IMPROVEMENTS

CONTRACT	BRIDGE NO.	1 748S 059
T201907402	DESIGNED BY: D. NIZAMOFF	
COUNTY		
NEW CASTLE	CHECKED BY: W. GESCHREI	

SOIL BORINGS 1 OF 2

BO-01
SECTION
WRA
SHEET NO.
153

N:\31987-004\Contract_Ramp_D\CADD\Bridge\BR1-748S_B001.dgn
8/23/2019 4:32:17 PM

BORING: 17B-R5 | **DATE DRILLED:** 6/26/2017
STATION: 1303+43.16 | **OFFSET:** 65.53' LT | **ELEVATION:** 38.8' | **NORTHING:** 633864.0000 | **EASTING:** 615093.0000
COMMENTS: N/A

NO.	DEPTH	BLOWS /6"	DESCRIPTION	CLASS /G.I.	REMARKS
1	2.0' 4.0'	6 16 16 23	MOIST DENSE BROWN SILTY FINE SAND AND FINE GRAVEL W/SOME COARSE SAND.	A-1-b	
2	4.0' 6.0'	18 14 13 11	pH SAMPLE	A-1-b	
3	6.0' 8.0'	14 9 9 8	WET MEDIUM DENSE BROWN SILTY COARSE SAND W/SOME FINE SAND AND FINE GRAVEL.	A-2-4(0)	
4	8.0' 10.0'	4 7 7 13	WET MEDIUM DENSE BROWN SILTY FINE TO COARSE SAND W/TRACE FINE GRAVEL.	A-2-4(0)	
5	10.0' 12.0'	5 6 7 6	WET STIFF BROWN CLAYEY FINE CLAYEY SILT W/TRACE COARSE TO FINE SAND.	A-4(1)	
6	12.0' 14.0'	6 7 8 10	WET STIFF GRAY CLAYEY SILT W/TRACE COARSE TO FINE SAND.	A-4(5)	
7	14.0' 16.0'	7 5 9 11	WET STIFF GRAY SILT W/TRACE FINE TO COARSE SAND AND CLAY.	A-4(2)	
8	16.0' 18.0'	9 10 11 10	WET VERY STIFF GRAY SILT W/SOME CLAY, TRACE OF FINE TO COARSE SAND AND FINE GRAVEL.	A-4(4)	
9	18.0' 20.0'	4 4 6 8	WET STIFF BROWN CLAYEY SILT W/TRACE FINE TO COARSE SAND AND FINE GRAVEL.	A-4(5)	
10	24.0' 26.0'	3 3 7 7	WET STIFF BROWN SILTY CLAY W/SOME FINE TO COARSE SAND, TRACE OF FINE GRAVEL.	A-6(7)	
11	28.0' 30.0'	4 6 9 11	WET MEDIUM DENSE GRAY CLAYEY COARSE TO FINE SAND W/SOME FINE GRAVEL AND SILT.	A-2-6(0)	
12	34.0' 36.0'	11 13 16 26	SATURATED MEDIUM DENSE GRAY SILTY COARSE TO FINE SAND.	A-2-4(0)	
13	38.0' 40.0'	11 16 26 31	SATURATED DENSE GRAY SILTY FINE TO COARSE SAND W/TRACE FINE GRAVEL.	A-2-4(0)	
R-1	42.0' 47.0'		GRANITE	A-2-4(0)	
R-2	47.0' 52.0'		GRANITE	A-2-4(0)	
	52.0' 74.0'		END BORING		

BORING: 17B-R6 | **DATE DRILLED:** 7/11/2017
STATION: 1305+15.00 | **OFFSET:** 108.87' LT | **ELEVATION:** 44.0' | **NORTHING:** 634051.0000 | **EASTING:** 615090.0000
COMMENTS: N/A

NO.	DEPTH	BLOWS /6"	DESCRIPTION	CLASS /G.I.	REMARKS
1	0.0' 2.0'		MOIST BROWN FINE SANDY SILT W/SOME COARSE SAND, CLAY AND FINE GRAVEL.	A-4(0)	
2	2.0' 4.0'		NO SAMPLE		
3	4.0' 6.0'	5 10 15 12	MOIST VERY STIFF GRAY CLAYEY SILT W/SOME FINE TO COARSE SAND, TRACE OF FINE GRAVEL.	A-4(2)	
4	6.0' 8.0'	11 14 11 10	MOIST VERY STIFF GRAY CLAYEY FINE GRAVELLY SILT W/SOME FINE TO COARSE SAND.	A-4(1)	
5	8.0' 10.0'	3 15 18 16	MOIST DENSE BROWN COARSE SAND AND FINE GRAVEL W/SOME FINE SAND AND SILT.	A-1-b	
6	10.0' 12.0'	15 17 17 19	MOIST DENSE BROWN FINE GRAVELLY COARSE SAND W/SOME FINE SAND AND SILT.	A-1-b	
7	12.0' 14.0'	5 12 15 16	MOIST MEDIUM DENSE BROWN FINE GRAVEL AND COARSE SAND W/SOME FINE SAND AND SILT.	A-1-b	
8	14.0' 16.0'	8 17 19 7	MOIST DENSE BROWN COARSE TO FINE SAND AND FINE GRAVEL W/SOME SILT.	A-1-b	
9	16.0' 18.0'	3 3 6 9	SATURATED STIFF BROWN SILTY CLAY W/SOME FINE TO COARSE SAND, TRACE OF FINE GRAVEL.	A-6(9)	
10	18.0' 20.0'	3 6 6 7	SATURATED STIFF BROWN SILT W/SOME CLAY, TRACE OF FINE TO COARSE SAND AND FINE GRAVEL.	A-4(2)	
11	24.0' 26.0'	2 3 4 11	SATURATED FIRM GRAY FINE SANDY CLAY W/SOME COARSE SAND AND SILT, TRACE OF FINE GRAVEL.	A-6(4)	
12	26.0' 31.0'	5 10 15 12	SATURATED VERY STIFF GRAY FINE TO COARSE SANDY CLAY W/SOME SILT.	A-7-5(9)	
13	34.0' 36.0'	6 16 18 45	SATURATED HARD BROWN COARSE TO FINE SANDY CLAY W/SOME SILT, TRACE OF FINE GRAVEL.	A-7-6(3)	
R-1	37.1' 42.1'	1 2 3 4	GRANITE	A-7-6(3)	
R-2	42.1' 47.1'	3 8 14 18	GRANITE	A-7-6(3)	
	47.1' 72.0'		END BORING		

UNOFFICIAL WEBSITE COPY

N:\31987-004\Contract_Ramp_D\CADD\Bridge\BR1-748S_BO02.dgn
8/23/2019 4:32:17 PM

ADDENDA / REVISIONS	NOT TO SCALE	REHABILITATION OF I-95, 2ND STREET ON-RAMP IMPROVEMENTS	CONTRACT T201907402	BRIDGE NO. 1 748S 059	SOIL BORINGS 2 OF 2	BO-02
			COUNTY NEW CASTLE	DESIGNED BY: D. NIZAMOFF		SECTION WRA
				CHECKED BY: W. GESCHREI		SHEET NO. 154

SECTION 200

1. REMOVAL OF STRUCTURES AND OBSTRUCTIONS:
ITEMS TO BE REMOVED UNDER ITEM 211000 - REMOVAL OF STRUCTURES AND OBSTRUCTIONS ASSOCIATED WITH BRIDGE 1-750 SHALL INCLUDE, BUT NOT BE LIMITED TO, THE FOLLOWING:
- ENTIRE BRIDGE TO 1'-0" BELOW EXISTING GRADE AND AS SHOWN ON THESE PLANS
- INCIDENTAL SIGNS ATTACHED TO BRIDGE
- PORTIONS OF DRAINAGE PIPES TO BE ABANDONED WHERE THEY INTERFERE WITH PROPOSED FOUNDATIONS

2. SIGNING:
TO AVOID DAMAGE, SIGNS WITHIN PROJECT LIMITS MAY BE REMOVED DURING CONSTRUCTION IF NEEDED, BUT MUST BE REPLACED TO MATCH FINAL CONDITIONS BEFORE REOPENING THE ROADWAY. ALL WORK RELATED TO MOVING AND REINSTALLING THE SIGN SHALL BE INCIDENTAL TO ITEM 211000 - REMOVAL OF STRUCTURES AND OBSTRUCTIONS. IF THE SIGN IS DAMAGED DURING CONSTRUCTION, THE SIGN SHALL BE REPLACED AT THE CONTRACTOR'S EXPENSE.

SECTION 600

3. PORTLAND CEMENT CONCRETE:
USE PORTLAND CEMENT CONCRETE FOR CAST-IN-PLACE ELEMENTS AS FOLLOWS:
(f'c = 28-DAY COMPRESSIVE STRENGTH)
CLASS A - PARAPETS, ABUTMENT BACKWALLS (f'c = 4.5 ksi)
CLASS B - PILE CAPS (f'c = 3.0 ksi)
CLASS C - MSE WALL LEVELING PAD (f'c = 2.0 ksi)
CLASS D - DECK, APPROACH SLABS, SLEEPER SLABS, MOMENT SLABS (f'c = 4.5 ksi)
A HIGHER CLASS CONCRETE MAY BE SUBSTITUTED FOR A LOWER CLASS CONCRETE AT NO ADDITIONAL COST TO THE DEPARTMENT WITH THE APPROVAL OF THE ENGINEER.
- CHAMFER ALL EXPOSED EDGES ¾" x ¾" UNLESS OTHERWISE NOTED.
- DO NOT SLIP-FORM BARRIERS, UNLESS OTHERWISE APPROVED BY THE ENGINEER.
- CONTRACTOR SHALL SUPPLY CONCRETE FOR THE PARAPETS, BRIDGE DECK, APPROACH SLABS, AND MOMENT SLABS THAT INCLUDES A SHRINKAGE-REDUCING/COMPENSATING ADMIXTURE. PAYMENT FOR ADMIXTURE WILL BE INCIDENTAL TO ITS RESPECTIVE CONCRETE ITEM (ITEMS 610008, 610016, 610017, AND 610018). THE ADMIXTURE MAY BE SUPPLIED BY ONE PRODUCT THAT PROVIDES BOTH EXPANSION AND PORE WATER SURFACE TENSION OR TWO SEPARATE PRODUCTS EACH ADDED AT A DOSAGE RECOMMENDED BY MANUFACTURER'S TECHNICAL DATA SHEETS AND HAVING THE FOLLOWING CHARACTERISTICS:
(A) DESIGNED TO PROVIDE BOTH THE FOLLOWING CHARACTERISTICS:
I. EXPANDS AT A RATE THAT CLOSELY COMPENSATES FOR SHRINKAGE OF THE CONCRETE MIX.
II. REDUCES THE CAPILLARY SURFACE TENSION OF THE CONCRETE PORE WATER.
(B) PROVIDES AT LEAST 80% SHRINKAGE REDUCTION AS MEASURED AND DOCUMENTED BY FIELD PERFORMANCE.
(C) FORMULATED FOR USE IN FREEZING AND THAWING WEATHER.

4. DECK SLAB:
THE DECK SLAB THICKNESS IS 8" WITH A 1¼" LMC OVERLAY WEARING SURFACE.

5. BAR REINFORCEMENT:
- REINFORCING STEEL SHALL CONFORM TO AASHTO M 31 (ASTM A615), GRADE 60.
- REINFORCING STEEL SHALL HAVE A 3" CLEAR COVER IF CAST AGAINST EARTH OR A 2" CLEAR COVER ELSEWHERE, UNLESS OTHERWISE SPECIFIED ON THE PLANS.
- ALL REINFORCING STEEL SHALL BE PROTECTED WITH FUSION BONDED EPOXY. EPOXY COATED REINFORCING STEEL SHALL CONFORM TO ASTM A775.
- ANY FIELD CUTTING OR FIELD BENDING MUST BE APPROVED BY THE ENGINEER. PAYMENT SHALL BE INCIDENTAL TO THE BAR REINFORCEMENT ITEM.
- GALVANIZED REINFORCING STEEL MAY BE SUBSTITUTED FOR EPOXY-COATED REINFORCING STEEL AT NO ADDITIONAL COST TO THE DEPARTMENT WITH THE APPROVAL OF THE ENGINEER.
- WELDING OF REINFORCEMENT DURING FABRICATION OR CONSTRUCTION WILL NOT BE PERMITTED UNLESS SPECIFIED.

6. CONCRETE SEALER:
REFER TO DIAGRAMS CONTAINING SILICONE-BASED ACRYLIC CONCRETE SEALER LIMITS ON PARAPETS AND DECK OVERHANGS ON DWG. TS-01 AND AS-02. SILICONE-BASED ACRYLIC CONCRETE SEALER SHALL BE APPLIED TO ALL EXPOSED CONCRETE SURFACES AT THE ABUTMENTS. PAYMENT WILL BE MADE UNDER ITEM 613001 - SILICONE-BASED ACRYLIC CONCRETE SEALER.

7. STRUCTURAL STEEL:
PROVIDE STRUCTURAL STEEL CONFORMING TO AASHTO M 270, GRADE 50 (ASTM A709, GRADE 50) DESIGNATION, EXCEPT WHEN NOTED OTHERWISE. THE ADDITIONAL REQUIREMENTS FOR CHARPY V-NOTCH TESTING (DENOTED AS 'CVN' ON PLANS) OF AASHTO M 270 FOR PRIMARY LOAD CARRYING MEMBERS SHALL BE INCLUDED. SUPPLEMENTAL NOTCH TOUGHNESS REQUIREMENTS ARE MANDATORY FOR:
- TOP AND BOTTOM GIRDER FLANGES
- GIRDER WEB PLATES
- BENT PLATE CHANNEL DIAPHRAGMS

ALL FASTENERS ARE 1" DIAMETER ASTM F3125, GR. A490 HIGH STRENGTH BOLTS, TYPE 1, UNLESS OTHERWISE NOTED.

SECTION 600 (CONTINUED)

7. STRUCTURAL STEEL (CONTINUED):
PROVIDE MATERIALS AND PERFORM WORK IN ACCORDANCE WITH AASHTO/AWS D1.5M/1.5:2015 BRIDGE WELDING CODE, AND CONTRACT DOCUMENTS. MAKE TACK WELDS WITH THE SAME TYPE OF ELECTRODE AND INCORPORATE IN THE FINAL WELD. NO OTHER TACK WELDING WILL BE PERMITTED.

DO NOT MAKE WELDS BY MANUAL SHIELDED METAL ARC PROCESS FOR PRIMARY GIRDER WELDS SUCH AS FLANGE TO WEB WELDS OR FOR SHOP SPLICES OF WEB AND FLANGES.

DO NOT USE FORM SUPPORT SYSTEMS THAT WILL CAUSE UNACCEPTABLE OVERSTRESS OR DEFORMATION TO PERMANENT BRIDGE MEMBERS.

THE FASCIA GIRDERS ARE DESIGNED FOR A TEMPORARY CONSTRUCTION LOAD APPLIED TO THE WEB WITHIN 6" OF THE BOTTOM FLANGE AT APPROXIMATELY 4'-0" INTERVALS. THIS LOAD APPROXIMATES THE HORIZONTAL COMPONENT OF A DECK SLAB OVERHANG FORM SUPPORT BRACKET AND CONSISTS OF A 0.465 KIP/FT ALLOWANCE FOR THE WEIGHT OF CONCRETE, FORMS, SCREED RAILING AND WALKWAY, AND A 3 KIP MOVING LOAD FOR THE DECK FINISHING MACHINE.

SHOP ASSEMBLE THE ENTIRE STEEL SUPERSTRUCTURE FOLLOWING THE SAME ERECTION PROCEDURES AND SUPPORT CONDITIONS TO ENSURE PROPER FIT FOR ALL STRUCTURAL STEEL COMPONENTS.

VERTICALLY ADJUST STAY-IN-PLACE FORMS TO ATTAIN FINISHED LINES AND GRADES REQUIRED ON THE PLANS.

USE OVERSIZED HOLES ON DIAPHRAGM CONNECTORS. ALL BOLTS ON DIAPHRAGMS MUST BE FINGER TIGHT AT ERECTION. BOLTS ARE TO BE TORQUED BEFORE CONCRETE DECK IS POURED.

STABILITY OF PARTIAL GIRDERS AND COMPLETED GIRDERS IS TO BE MAINTAINED BY THE CONTRACTOR DURING ERECTION UNTIL ALL GIRDERS AND DIAPHRAGMS ARE IN-PLACE AND ALL BOLTS ARE PROPERLY INSTALLED. ERECTION LOADS INCLUDING SELF-WEIGHT OF THE STEEL MEMBERS, WIND LOADING AND CONSTRUCTION LIVE LOAD EFFECTS ARE TO BE EVALUATED BY THE CONTRACTOR FOR STABILITY, STRESSES AND DEFLECTIONS ON THE STEEL MEMBERS DURING ANY STAGE OF ERECTION.

PAINTING OF NEW STEEL SHALL BE IN ACCORDANCE WITH SECTION 616. PAINT COLOR SHALL MATCH THE EXISTING STEEL SUPERSTRUCTURE OF BR 1-748S.

MISCELLANEOUS

8. DESIGN SPECIFICATIONS:
(A) DELDOT BRIDGE DESIGN MANUAL, 2017 EDITION.
(B) 2014 AASHTO LRFD BRIDGE DESIGN SPECIFICATIONS, 7TH EDITION, U.S. CUSTOMARY UNITS INCLUDING 2015 AND 2016 INTERIM.
(C) PROVIDE MATERIALS AND PERFORM WORK IN ACCORDANCE WITH THE 2016 DELDOT STANDARD SPECIFICATIONS INCLUDING 2018 SUPPLEMENTAL SPECIFICATIONS.

9. LOADING:
-DEAD LOADS INCLUDE 15 PSF FOR STAY-IN-PLACE FORMS (INCLUDES CONCRETE IN FORM CORRUGATIONS).
-DESIGN LIVE LOADS INCLUDE HL-93 LOADING.
-FATIGUE DESIGN IS BASED ON THE FOLLOWING ONE DIRECTIONAL TRAFFIC VOLUMES: ADTT = 457 IN YEAR 2040.
-LIVE LOAD DISTRIBUTION TO THE GIRDERS IS BASED ON THE AASHTO SIMPLIFIED METHOD.
-THERMAL LOADS AND MOVEMENTS ARE BASED ON THE MODERATE TEMPERATURE RANGE AS STIPULATED IN THE AASHTO LRFD DESIGN SPECIFICATIONS AS 0° TO 110°F. THE NORMAL TEMPERATURE SHALL BE CONSIDERED TO BE 68° F.
-LIVE LOAD DEFLECTION SHALL BE LIMITED TO L/800.
-FOR SEISMIC LOADS, CONSIDER SEISMIC PERFORMANCE ZONE 1, WITH A SITE CLASS = D AND OPERATIONAL CATEGORY = ESSENTIAL
-FOR REINFORCEMENT DISTRIBUTION REQUIREMENTS, CONSIDER CLASS 1 EXPOSURE CRITERIA FOR DECKS.
-PARAPETS HAVE BEEN DESIGNED FOR MASH TEST LEVEL 4 (TL-4).

10. EXISTING CONDITIONS:
ALL EXISTING DIMENSIONS AND ELEVATIONS SHOWN ARE BASED ON THE BEST AVAILABLE INFORMATION AND ARE APPROXIMATE ONLY. THE CONTRACTOR SHALL FIELD VERIFY ALL EXISTING DIMENSIONS, GEOMETRY, AND ELEVATIONS AS NECESSARY PRIOR TO ORDERING ANY MATERIALS AND COMMENCING CONSTRUCTION TO ENSURE PROPER FIT OF THE PROPOSED CONSTRUCTION. PAYMENT WILL BE INCIDENTAL TO ITEM 763501 - CONSTRUCTION ENGINEERING.

11. ROADWAY CLEARANCES:
A MINIMUM OF 16'-6" SHALL BE MAINTAINED ABOVE ALL ROADWAYS.

12. SEE UTILITY STATEMENT AND UTILITY RELOCATION PLAN SHEETS FOR FURTHER INFORMATION ON UTILITY COORDINATION.

13. ENVIRONMENTAL COMPLIANCE:
ENVIRONMENTAL COMPLIANCE PLANS ARE NOT REQUIRED FOR THIS PROJECT. NO ENVIRONMENTAL RESOURCES ARE IMPACTED BY THE PROPOSED WORK.

INDEX OF BRIDGE 1-750 SHEETS

BR. SHEET Nº	BR. DWG. Nº	TABLE OF CONTENTS
155	PN-01	BRIDGE PROJECT NOTES
156	PN-02	QUANTITIES AND LOAD RATINGS
157	PE-01	GENERAL PLAN AND ELEVATION
158	TS-01	BRIDGE TYPICAL SECTION
159 TO 160	FT-01 TO FT-02	GEOMETRIC AND FOOTING LAYOUT PLAN
161	PL-01	PILE LAYOUT PLAN
162	PL-02	STEEL H-PILE DETAILS
163 TO 166	AB-01 TO AB-04	ABUTMENT DETAILS
167	FR-01	FRAMING PLAN
168 TO 169	BM-01 TO BM-02	GIRDER DETAILS
170	SD-01	SUPERSTRUCTURE DETAILS
171 TO 173	DK-01 TO DK-03	DECK SLAB AND PARAPET REINFORCEMENT
174 TO 177	PA-01 TO PA-04	PARAPET DETAILS
178	FD-01	FINISHED BRIDGE DECK ELEVATIONS
179 TO 183	AS-01 TO AS-05	APPROACH AND SLEEPER SLAB DETAILS
184 TO 197	RD-01 TO RD-14	MSE WALL & MOMENT SLAB DETAILS
198 TO 199	BR-01 TO BR-02	REINFORCEMENT SCHEDULE
200 TO 201	BO-01 TO BO-02	SOIL BORINGS
TOTAL BRIDGE SHEETS: 47		

MISCELLANEOUS (CONTINUED)

14. COORDINATION WITH THE CITY OF WILMINGTON:
THE CONTRACTOR SHALL COORDINATE ALL WORK WITH THE CITY OF WILMINGTON, ESPECIALLY WORK WHICH IMPACTS CITY STREETS. THE CONTRACTOR SHALL NOTIFY BRIAN MITCHELL AT (302) 576-3089 AT LEAST 14 DAYS PRIOR TO ANY COORDINATION REQUIREMENTS AND/OR CHANGES IN TRAFFIC PATTERNS.

15. CONSTRUCTION FENCE:
PORTABLE CHAINLINK FENCE IS REQUIRED AROUND THE PERIMETER OF ALL BELOW-DECK WORK AREAS AND AT LOCATIONS DIRECTED BY THE ENGINEER. PAYMENT WILL BE MADE UNDER ITEM 727548 - PORTABLE CHAINLINK FENCE. SEE DWGS. CS-01 TO CS-301.

16. CLEARING AND GRUBBING:
ALL VEGETATIVE GROWTH SHALL BE REMOVED FROM THE PIERS, ABUTMENTS, AND SUPERSTRUCTURE ELEMENTS TO REMAIN AS DIRECTED BY THE ENGINEER. PAYMENT WILL BE INCIDENTAL TO ITEM 201000 - CLEARING AND GRUBBING.

17. CONTRACT RESTRICTIONS:
THE DEPARTMENT HAS NOT OBTAINED A NOISE WAIVER UNDER THE PROVISIONS OF THE CITY OF WILMINGTON CODE FOR THE PURPOSE OF WORKING EXTENDED HOURS AT NIGHT. WORKING HOURS FOR THIS PROJECT SHALL BE LIMITED TO 8:00AM TO 7:00PM, MONDAY THROUGH FRIDAY; 9:00AM TO 7:00PM SATURDAY; 10:00AM TO 5:00PM SUNDAY AND HOLIDAYS. THE CONTRACTOR MAY COORDINATE AND SUBMIT TO OBTAIN A NOISE WAIVER FOR PURPOSES OF EXPEDITING HIS CONSTRUCTION EFFORTS AT NO ADDITIONAL COST TO THE DEPARTMENT. THE CONTRACTOR SHALL ADDRESS ANY CONCERNS ABOUT THE NOISE WAIVER TO THE DEPARTMENT OF LICENSES AND INSPECTIONS, CITY OF WILMINGTON, 800 FRENCH ST., 5TH FLOOR, WILMINGTON, DELAWARE 19801. THE DEPARTMENT WILL NOT BE HELD RESPONSIBLE FOR ANY ISSUES/DELAYS/OR REJECTIONS WITH THE COORDINATION, RECEIPT OR EXECUTION OF THE WORK IN CONJUNCTION WITH THE NOISE WAIVER AND CANNOT BE CAUSE FOR A DELAY CLAIM.

IN ADDITION, BRIDGE AND ROAD CLOSURES WILL NOT BE PERMITTED ON THE FOLLOWING WEEKENDS:
T.B.D.

NOTE: THESE ARE PROJECTED DATES AND SHALL BE CONFIRMED WITH THE CITY OF WILMINGTON'S EVENTS CALENDAR.

http://sites.google.com/site/wilmingtoneventswept/Home

FOR ADDITIONAL WORK RESTRICTIONS, SEE THE CONSTRUCTION PHASING, M.O.T. AND EROSION CONTROL PLAN SHEETS ON DWGS. CS-01 TO CS-301.

15. ABBREVIATIONS:

BOT. = BOTTOM	MAX. = MAXIMUM
C/C = CENTER-TO-CENTER	MIN. = MINIMUM
℄ = CENTERLINE	NO. = NUMBER
CLR. = CLEAR	N.T.S. = NOT TO SCALE
DIA. = DIAMETER	OH = OVERHEAD
DWG. = DRAWING	P.C.C. = PORTLAND CEMENT CONCRETE
E.F. = EACH FACE	SCH. = SCHEDULE
EL. = ELEVATION	SHLD. = SHOULDER
FIX. = FIXED	STA. = STATION
L.L.V. = LONG LEG VERTICAL	S.W. = SHOP WELD
LMC = LATEX MODIFIED CONCRETE	TYP. = TYPICAL
	UG = UNDERGROUND

UNOFFICIAL WEBSITE COPY

QUANTITIES

ITEM Nº	ITEM TITLE	UNIT	QUANTITY
202518	SETTLEMENT MONUMENT	EACH	26
207000	STRUCTURAL EXCAVATION	CY	4478
211000	REMOVAL OF STRUCTURES AND OBSTRUCTIONS	LS	1
301001	GRADED AGGREGATE BASE COURSE, TYPE B	CY	329
604001	PROTECTIVE SHIELD	LS	1
604502	PROTECTION OF EXISTING STRUCTURES	LS	1
605021	FURNISH STEEL H-PILES, HP 12 X 53	LF	462
605071	FURNISH STEEL H INDICATOR OR TEST PILES, HP 12 X 53	LF	77
605121	INSTALL STEEL H PILES, HP 12 X 53	LF	462
605171	INSTALL STEEL H INDICATOR OR TEST PILES, HP 12 X 53	LF	77
605201	DYNAMIC PILE TESTING BY CONTRACTOR	EACH	2
607000	MECHANICALLY STABILIZED EARTH WALLS	SF	15873
610002	PORTLAND CEMENT CONCRETE MASONRY, ABUTMENT ABOVE FOOTING, CLASS A	CY	41
610008	PORTLAND CEMENT CONCRETE MASONRY, PARAPET, CLASS A	CY	109
610010	PORTLAND CEMENT CONCRETE MASONRY, ABUTMENT FOOTING, CLASS B	CY	22
610016	PORTLAND CEMENT CONCRETE MASONRY, CLASS D	CY	26
610017	PORTLAND CEMENT CONCRETE MASONRY, SUPERSTRUCTURE, CLASS D	CY	109
610018	PORTLAND CEMENT CONCRETE MASONRY, APPROACH SLAB, CLASS D	CY	347
611001	BAR REINFORCEMENT, EPOXY COATED	LB	132224
613001	SILICONE BASED ACRYLIC CONCRETE SEALER	SF	10696
615001	STEEL STRUCTURES	LS	1
624000	PREFABRICATED EXPANSION JOINT SYSTEM, 3"	LF	66
625000	LATEX-MODIFIED CONCRETE OVERLAY INSTALLATION	SY-IN	538
625001	FURNISHING LATEX-MODIFIED CONCRETE OVERLAY	CY	19

LOAD RATING SUMMARY

DESIGN VEHICLE	*RATING FACTOR*	*RATING WEIGHT (TON)*	*CONTROLLING MEMBER*	*CONTROLLING POINT*	*LOAD EFFECT*
HL-93 TRUCK (INVENTORY)	*1.18*	*N/A*	*EXTERIOR*	*105*	*SERVICE II*
HL-93 TANDEM (INVENTORY)	*1.40*	*N/A*	*EXTERIOR*	*105*	*SERVICE II*
HL-93 TRUCK TRAIN (INVENTORY)	*N/A*	*N/A*	*N/A*	*N/A*	*N/A*
HS-20 (INVENTORY)	*1.68*	*60.48*	*EXTERIOR*	*105*	*SERVICE II*
HL-93 TRUCK (OPERATING)	*1.54*	*N/A*	*EXTERIOR*	*105*	*SERVICE II*
HL-93 TANDEM (OPERATING)	*1.82*	*N/A*	*EXTERIOR*	*105*	*SERVICE II*
HL-93 TRUCK TRAIN (OPERATING)	*N/A*	*N/A*	*N/A*	*N/A*	*N/A*
HS-20 (OPERATING)	*2.19*	*78.84*	*EXTERIOR*	*105*	*SERVICE II*
DE S220 & LEGAL-LANE (LEGAL)	*2.92*	*58.40*	*EXTERIOR*	*105*	*SERVICE II*
DE S335 & LEGAL-LANE (LEGAL)	*1.64*	*57.40*	*EXTERIOR*	*105*	*SERVICE II*
DE S437 & LEGAL-LANE (LEGAL)	*1.56*	*57.16*	*EXTERIOR*	*105*	*SERVICE II*
DE T330 & LEGAL-LANE (LEGAL)	*2.18*	*65.40*	*EXTERIOR*	*105*	*SERVICE II*
DE T435 & LEGAL-LANE (LEGAL)	*1.90*	*66.50*	*EXTERIOR*	*105*	*SERVICE II*
DE T540 & LEGAL-LANE (LEGAL)	*1.67*	*66.80*	*EXTERIOR*	*105*	*SERVICE II*

NOTES:
1) LOAD RATING INCLUDES FUTURE WEARING SURFACE AS NOTED IN THE PLANS.
2) RATING VALUES FOR THE EV2, EV3, SU4, SU5, SU6, AND SU7 VEHICLES CAN BE FOUND IN THE LOAD RATING CALCULATIONS IN THE BRIDGE INSPECTION FILE.

UNOFFICIAL WEBSITE COPY

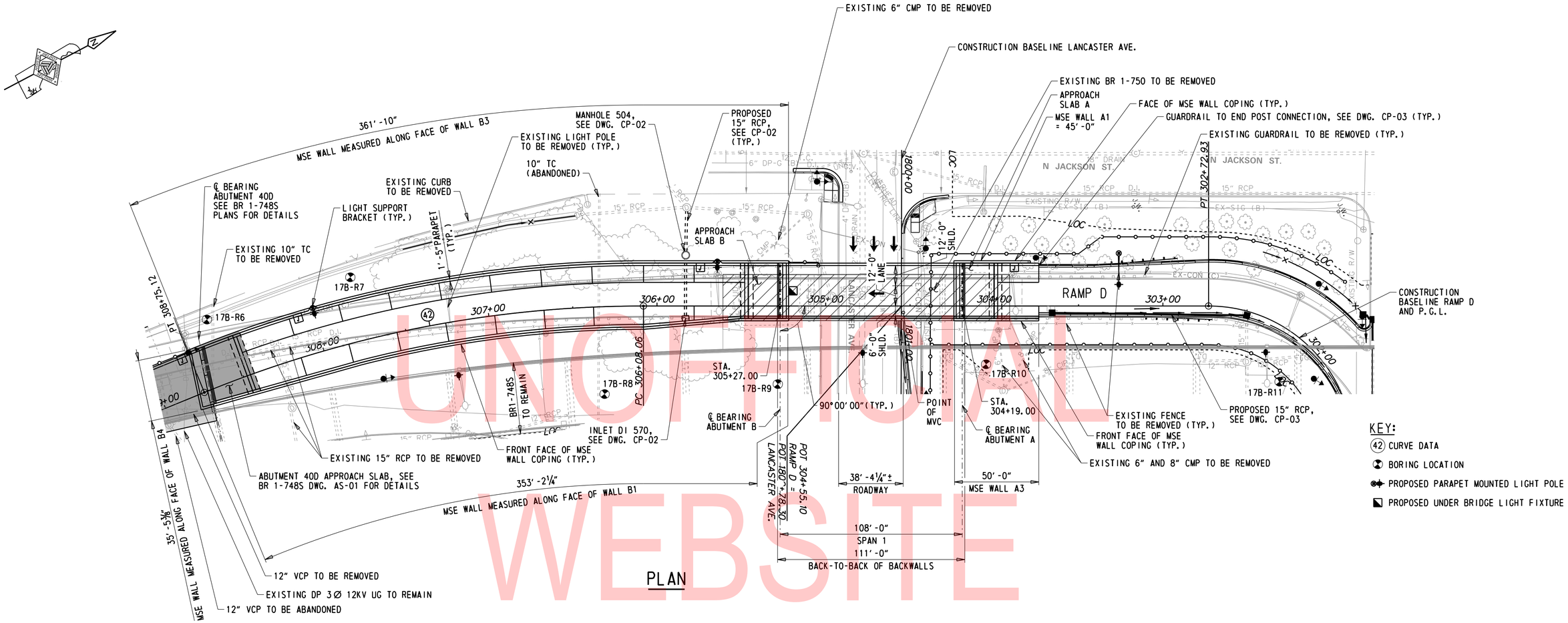

PLAN

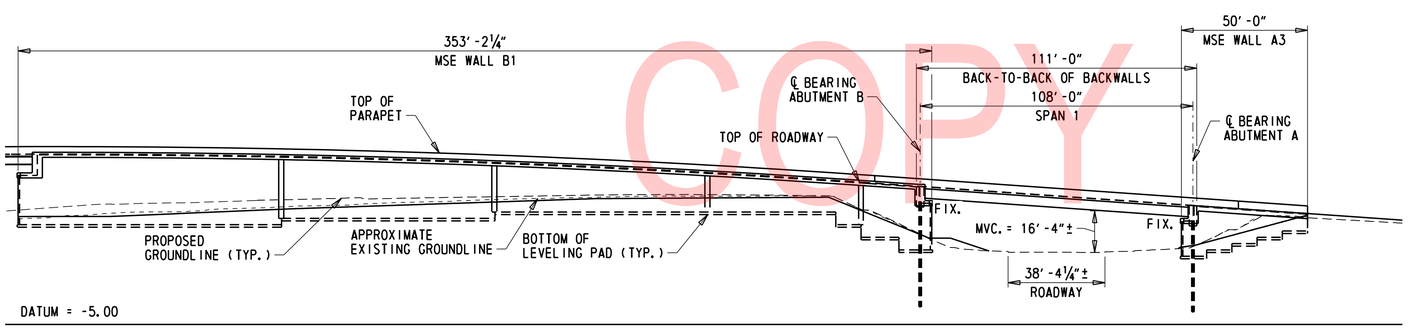

ELEVATION - DEVELOPED ALONG CONSTRUCTION BASELINE RAMP D

HORIZONTAL CURVE DATA

CURVE 42

P.I. STA. = 307+43.30
DELTA = 22°16'20.4372"
Dc = 8°20'23.9893"
R = 687.00'
T = 135.2345'
L = 267.0546'
E = 13.1838'
P.C. STA. = 306+08.06
P.T. STA. = 308+75.12

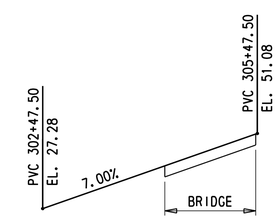

VERTICAL CURVE DATA RAMP D

LEGEND:

EXISTING BR 1-750 TO BE REMOVED

NOTES:

1. FOR LENGTHS OF MSE WALLS A2 AND B2, SEE DWG. FT-02.

UNOFFICIAL WEBSITE COPY

N:\31987-004\Contract_Ramp_D\CADD\Bridge\BR1-750_PE01.dgn
8/23/2019 4:32:34 PM

ADDENDA / REVISIONS	

SCALE 0 30 60 90 FEET

REHABILITATION OF I-95, 2ND STREET ON-RAMP IMPROVEMENTS

CONTRACT	BRIDGE NO.	1 750 6148
T201907402	DESIGNED BY: D. NIZAMOFF	
COUNTY		
NEW CASTLE	CHECKED BY: W. GESCHREI	

GENERAL PLAN AND ELEVATION

PE-01
SECTION
WRA
SHEET NO.
157

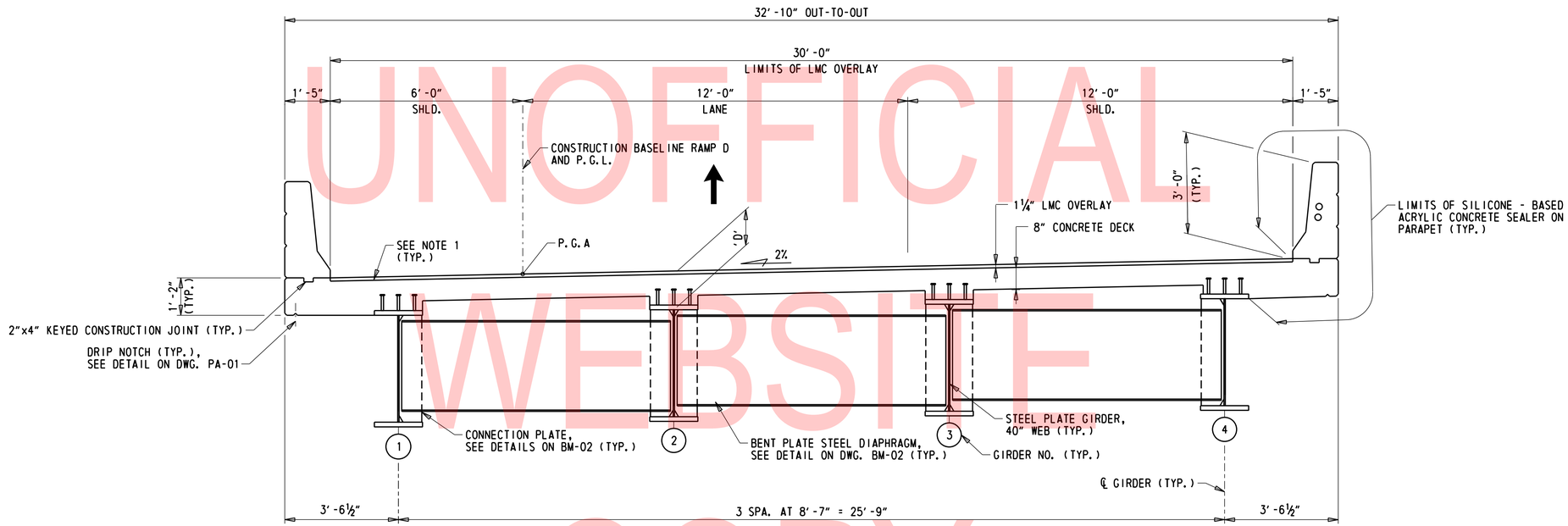

PROPOSED TYPICAL SECTION

½" = 1'-0"

UNOFFICIAL WEBSITE COPY

NOTE:

1. THE TOP SURFACE OF THE CLASS D CONCRETE DECK SHALL BE ROUGH FINISHED TO A FULL AMPLITUDE OF ¼". THE CONCRETE SHALL BE SCRUBBED TRANSVERSELY WITH A COARSE WIRE BRUSH TO REMOVE ALL LAITANCE AND TO PRODUCE A ROUGHENED SURFACE FOR BONDING WITH THE LMC OVERLAY.
2. 'D' = 13¼" TO TOP OF CONCRETE DECK, 14½" TO TOP OF LMC OVERLAY.

ADDENDA / REVISIONS		SCALE AS NOTED	REHABILITATION OF I-95, 2ND STREET ON-RAMP IMPROVEMENTS	CONTRACT T201907402	BRIDGE NO. 1 750 6148	BRIDGE TYPICAL SECTION	TS-01
				COUNTY NEW CASTLE	DESIGNED BY: D. NIZAMOFF		SECTION WRA
					CHECKED BY: W. GESCHREI		SHEET NO. 158

N:\31987-004\Contract_Ramp_D\CADD\Bridge\BRI-750_TS01.dgn
8/23/2019 4:32:35 PM

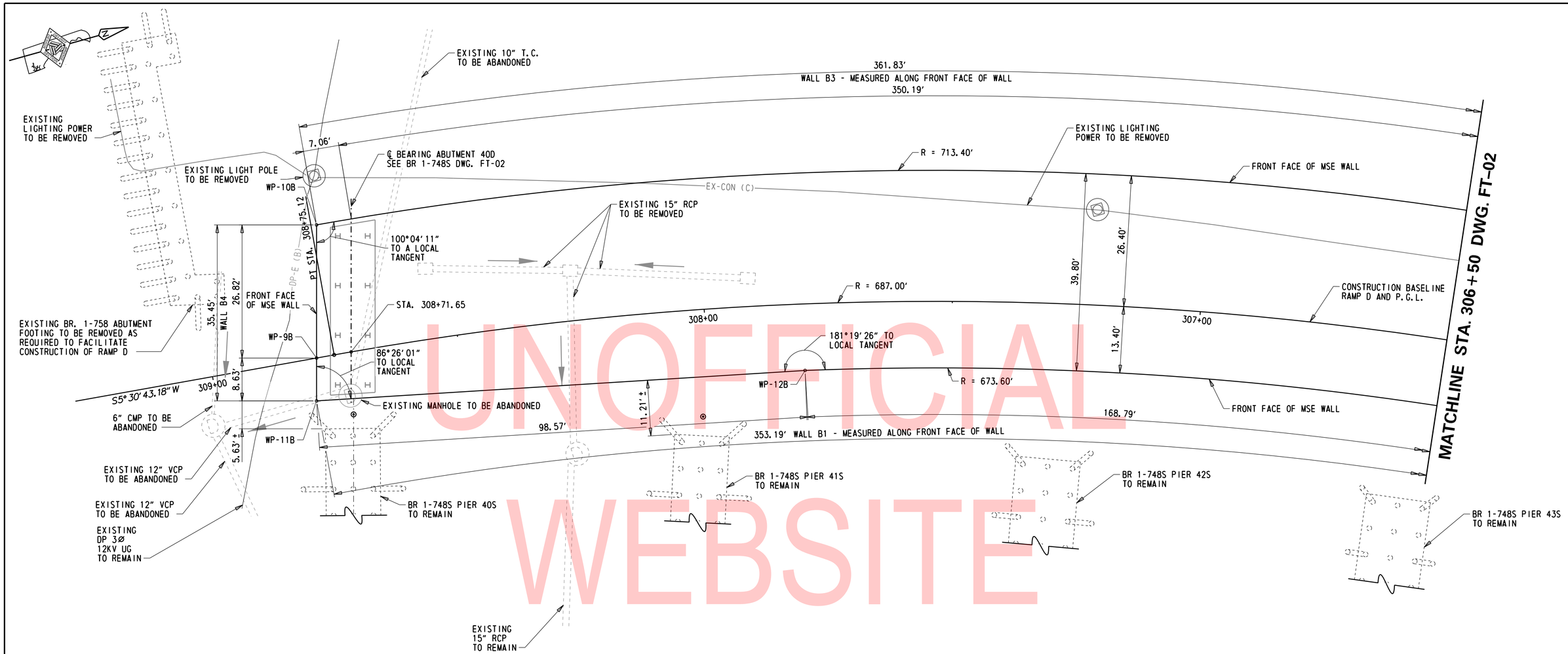

UNOFFICIAL WEBSITE COPY

GEOMETRIC AND FOOTING PLAN

PILE LEGEND:

- H PROPOSED H-PILE
- EXISTING 12" C.I.P. CONCRETE PILE
- EXISTING 12" C.I.P. CONCRETE PILE, BATTERED 1H:4V
- PROPOSED INCLINOMETER

INCLINOMETERS				
INCLINOMETER	STATION	OFFSET	NORTHING	EASTING
1	308+73.32	12.34' LT.	634029.9803	615139.9948
2	308+01.73	21.41' LT.	634097.6265	615159.4422

WORKING POINTS				
POINT	STATION	OFFSET	NORTHING	EASTING
WP-9B	308+78.71	0.00'	634025.8266	615127.1905
WP-10B	308+74.03	26.40' RT.	634033.0707	615101.3719
WP-11B	308+75.12	8.50' LT.	634023.4941	615135.5036
WP-12B	307+80.17	13.40' LT.	634119.8676	615156.1755

NOTES:

1. EXISTING PILE AND FOOTING LAYOUT AND LOCATIONS ARE BASED ON EXISTING PLANS AND MAY NOT REFLECT ACTUAL LOCATION.
2. FOR MSE WALL TYPICAL SECTION, SEE DWG. RD-05.
3. FOR DESCRIPTION OF SETTLEMENT QUARANTINE PERIOD, MSE WALL MONITORING REQUIREMENTS, AND INCLINOMETER REQUIREMENTS, SEE DWG. RD-01. MONITORING OF EXISTING BRIDGE PIERS ADJACENT TO MSE WALL IS REQUIRED.

ADDENDA / REVISIONS

SCALE 0 10 20 30 FEET

REHABILITATION OF I-95, 2ND STREET ON-RAMP IMPROVEMENTS

CONTRACT	BRIDGE NO.	1 750 6148
T201907402	DESIGNED BY: D. NIZAMOFF	
COUNTY		
NEW CASTLE	CHECKED BY: W. GESCHREI	

GEOMETRIC AND FOOTING LAYOUT – 1 1 OF 2

FT-01
SECTION
WRA
SHEET NO.
159

N:\31987-004\Contract_Ramp_D\CADD\Bridge\BR1-750_FT01.dgn
8/23/2019 4:32:35 PM

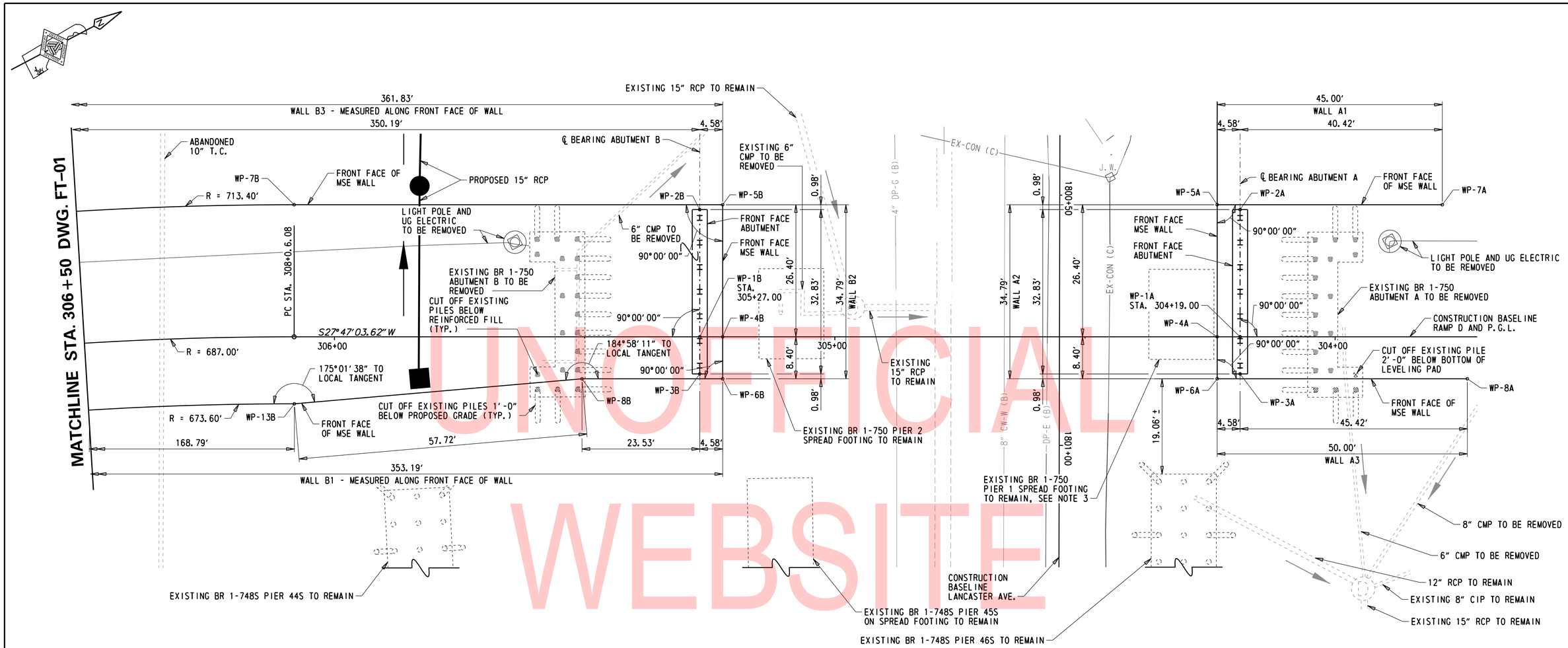

UNOFFICIAL WEBSITE COPY

GEOMETRIC AND FOOTING LAYOUT

WORKING POINTS

POINT	STATION	OFFSET	NORTHING	EASTING
WP-1A	304+19.00	0.00'	634450.9247	615291.6957
WP-2A	304+19.00	25.42' RT.	634462.7725	615269.2093
WP-3A	304+19.00	7.42' LT.	634447.4674	615298.2572
WP-4A	304+23.58	0.00'	634446.8698	615289.5592
WP-5A	304+23.58	26.40' RT.	634459.1740	615266.2065
WP-6A	304+23.58	8.40' LT.	634442.9561	615296.9870
WP-7A	303+78.58	26.40' RT.	634498.9859	615287.1831
WP-8A	303+73.58	8.40' LT.	634487.1922	615320.2946
WP-1B	305+27.00	0.00'	634355.3922	615241.3604
WP-2B	305+27.00	25.42' RT.	634367.2240	615218.8657
WP-3B	305+27.00	7.42' LT.	634351.9189	615247.9136
WP-4B	305+22.42	0.00'	634359.4311	615243.4885
WP-5B	305+22.42	26.40' RT.	634371.7354	615220.1359
WP-6B	305+22.42	8.40' LT.	634355.5174	615250.9164
WP-7B	308+06.08	26.40' RT.	634295.9627	615180.2119
WP-8B	305+50.53	8.40' LT.	634330.6486	615237.8132
WP-13B	306+08.03	13.40' LT.	634277.4469	615215.4333

PILE LEGEND:

- H PROPOSED H-PILE
- EXISTING 12" C.I.P. CONCRETE PILE
- EXISTING 12" C.I.P. CONCRETE PILE, BATTERED 1H:4V
- EXISTING 12" C.I.P. CONCRETE PILE, BATTERED 1H:4V, CUT OFF 1'-0" BELOW PROPOSED GRADE
- EXISTING 12" C.I.P. CONCRETE PILE, CUT OFF BELOW REINFORCED FILL
- EXISTING 12" C.I.P. CONCRETE PILE, BATTERED 1H:4V, CUT OFF BELOW REINFORCED FILL
- EXISTING 12" C.I.P. CONCRETE PILE, CUT OFF 2'-0" BELOW BOTTOM OF LEVELING PAD

NOTES:

1. FOR ABUTMENT PILE LAYOUT, SEE PILE LAYOUT PLAN ON DWG. PL-01.
2. EXISTING PILE AND FOOTING LAYOUT AND LOCATIONS ARE BASED ON EXISTING PLANS AND MAY NOT REFLECT ACTUAL LOCATION.
3. PORTION OF EXISTING PIER 1 SPREAD FOOTING MAY BE REMOVED AS REQUIRED TO FACILITATE CONSTRUCTION OF THE LEVELING PAD AND MSE WALL. PAYMENT FOR PARTIAL REMOVAL WILL BE INCIDENTAL TO ITEM 211000 - REMOVAL OF STRUCTURES AND OBSTRUCTIONS.
4. FOR MSE WALL TYPICAL SECTION, SEE DWG. RD-05.
5. PAYMENT FOR PARTIAL REMOVAL OF EXISTING PILES WILL BE INCIDENTAL TO ITEM 211000 - REMOVAL OF STRUCTURES AND OBSTRUCTIONS.
6. FOR DESCRIPTION OF SETTLEMENT QUARANTINE PERIOD AND MSE WALL MONITORING REQUIREMENTS, SEE DWG. DWG. RD-01. MONITORING OF EXISTING BRIDGE PIERS ADJACENT TO MSE WALL IS REQUIRED.
7. FOR DESCRIPTION OF UNDERCUTTING AT BRIDGE 1-750 ABUTMENT A, SEE DWG. RD-01.

ADDENDA / REVISIONS

SCALE 0 10 20 30 FEET

REHABILITATION OF I-95, 2ND STREET ON-RAMP IMPROVEMENTS

CONTRACT	BRIDGE NO.	1 750 6148
T201907402	DESIGNED BY: D. NIZAMOFF	
COUNTY		
NEW CASTLE	CHECKED BY: W. GESCHREI	

GEOMETRIC AND FOOTING LAYOUT - 2
2 OF 2

FT-02
SECTION
WRA
SHEET NO.
160

N:\31987-004\Contract_Ramp_D\CADD\Bridge\BR1-750_FT02.dgn
8/23/2019 4:32:36 PM

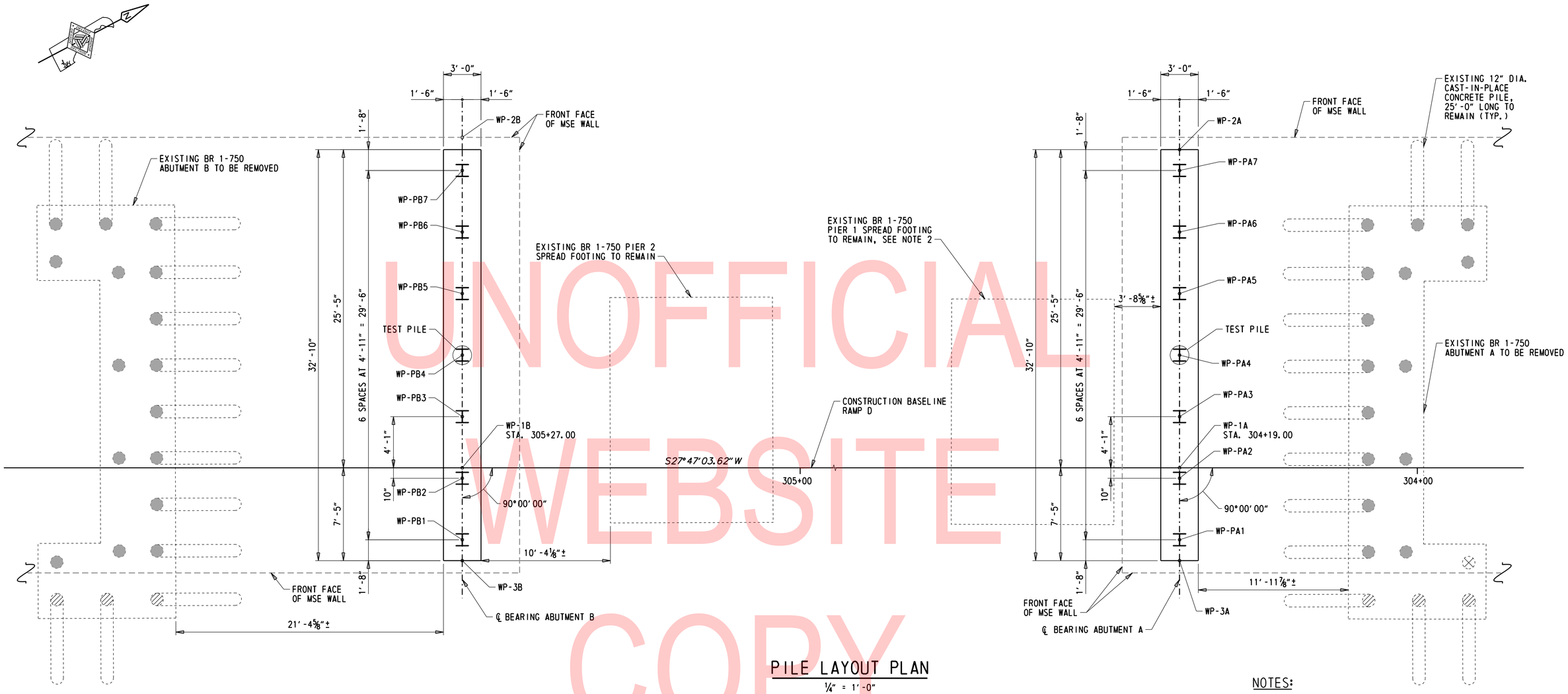

PILE LAYOUT PLAN

¼" = 1'-0"

UNOFFICIAL WEBSITE COPY

PILE LEGEND:

- PROPOSED H-PILE
- PROPOSED H-PILE AND DYNAMIC PILE TESTING
- EXISTING 12" C.I.P. CONCRETE PILE, BATTERED 1H:4V, CUT OFF 1'-0" BELOW PROPOSED GRADE
- EXISTING 12" C.I.P. CONCRETE PILE, CUT OFF BELOW REINFORCED FILL
- EXISTING 12" C.I.P. CONCRETE PILE, BATTERED 1H:4V, CUT OFF BELOW REINFORCED FILL
- EXISTING 12" C.I.P. CONCRETE PILE, CUT OFF 2'-0" BELOW BOTTOM OF LEVELING PAD

NOTE:
PILES SHALL BE DRIVEN IN THE WEAK AXIS ORIENTATION AS SHOWN.

PILE DATA

SUBSTRUCTURE UNIT	DESIGN DATA				ACTUAL FIELD DATA		
	PILE SIZE	MINIMUM TIP ELEVATION	ESTIMATED TIP ELEVATION	ESTIMATED PRODUCTION PILE LENGTH	MINIMUM TIP ELEVATION	AVERAGE TIP ELEVATION	MAXIMUM TIP ELEVATION
ABUTMENT A	HP12x53	10.0	2.0	37.0			
ABUTMENT B	HP12x53	15.0	0.0	47.0			

PILE COORDINATES

POINT	STATION	OFFSET	NORTHING	EASTING
WP-PA1	304+19.00	5.75' LT.	634448.2443	615296.7827
WP-PA2	304+19.00	0.83' LT.	634450.5362	615292.4329
WP-PA3	304+19.00	4.08' RT.	634452.8281	615288.0831
WP-PA4	304+19.00	9.00' RT.	634455.1200	615283.7333
WP-PA5	304+19.00	13.92' RT.	634457.4119	615279.3835
WP-PA6	304+19.00	18.83' RT.	634459.7037	615275.0336
WP-PA7	304+19.00	23.75' RT.	634461.9956	615270.6838
WP-PB1	305+27.00	5.75' LT.	634352.6958	615246.4391
WP-PB2	305+27.00	0.83' LT.	634354.9877	615242.0893
WP-PB3	305+27.00	4.08' RT.	634357.2796	615237.7394
WP-PB4	305+27.00	9.00' RT.	634359.5714	615233.3896
WP-PB5	305+27.00	13.92' RT.	634361.8633	615229.0398
WP-PB6	305+27.00	18.83' RT.	634364.1552	615224.6900
WP-PB7	305+27.00	23.75' RT.	634366.4471	615220.3402

NOTES:

1. EXISTING FOOTING AND PILE LAYOUT AND LOCATIONS ARE BASED ON EXISTING PLANS AND MAY NOT REFLECT ACTUAL LOCATION.
2. PORTION OF EXISTING PIER 1 FOOTING SHALL BE REMOVED AS REQUIRED TO FACILITATE CONSTRUCTION OF THE LEVELING PAD AND MSE WALL (NOT SHOWN). PAYMENT FOR THE PARTIAL REMOVAL WILL BE INCIDENTAL TO ITEM 211000 - REMOVAL OF STRUCTURES AND OBSTRUCTIONS.
3. FOR ADDITIONAL PILE NOTES, SEE PROJECT SPECIFIC PILE NOTES, GENERAL PILE NOTES AND STEEL PILE NOTES ON DWG. PL-02.
4. FOR WORKING POINT INFORMATION, SEE TABLE ON DWG. FT-02.
5. PILES FOR SUPPORT OF BRIDGE 1-750 ABUTMENTS A AND B SHALL BE INSTALLED PRIOR TO CONSTRUCTION OF MSE WALL AND WITHOUT PILE CASINGS/CANS.
6. ALL PILES SHALL BE INSTALLED WITH PILE TIP PROTECTION (PILE SHOES) TO PREVENT PILE DAMAGE DURING DRIVING, SEE DWG. PL-02.

ADDENDA / REVISIONS

SCALE AS NOTED

REHABILITATION OF I-95, 2ND STREET ON-RAMP IMPROVEMENTS

CONTRACT	BRIDGE NO.	1 750 6148
T201907402	DESIGNED BY: D. NIZAMOFF	
COUNTY		
NEW CASTLE	CHECKED BY: W. GESCHREI	

PILE LAYOUT PLAN

PL-01
SECTION WRA
SHEET NO. 161

N:\31987-004\Contract_Ramp_D\CADD\Bridge\BR1-750_PL01.dgn
8/23/2019 4:32:37 PM

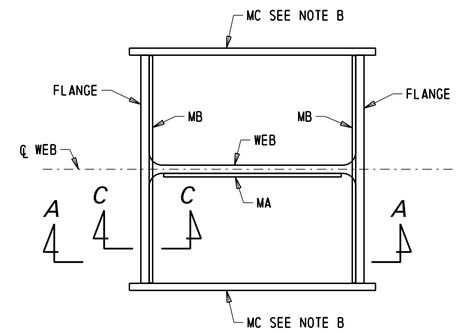

PLAN

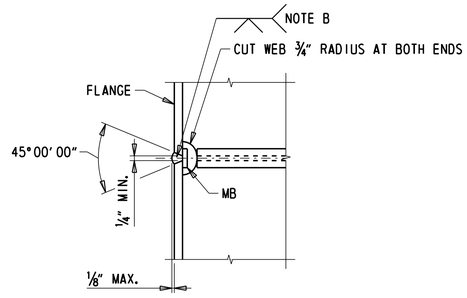

SECTION C-C
ALTERNATE FLANGE WELD

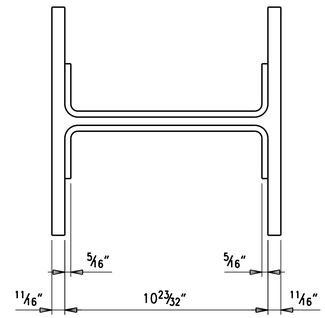

PLAN

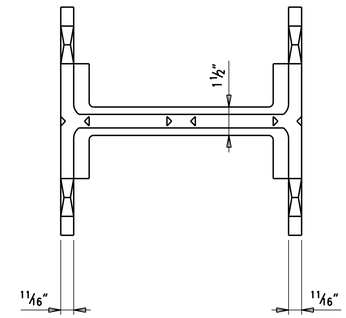

PLAN

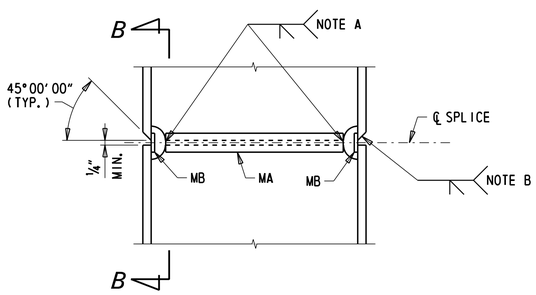

SECTION A-A

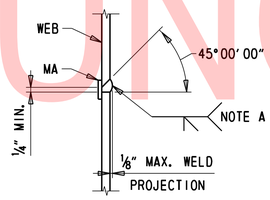

SECTION B-B

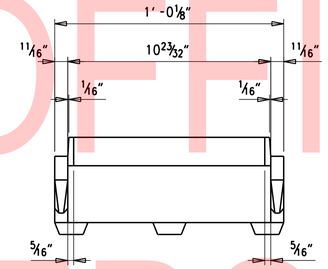

ELEVATION

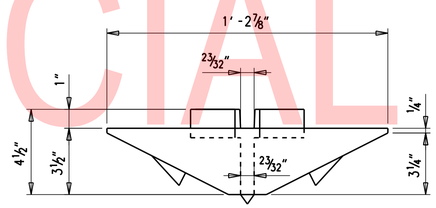

SIDE VIEW

12" H-PILE DRIVING SHOE

3"=1'-0"

SPLICE MATERIAL REQUIREMENTS		
HP 10"	HP 12"	HP 14"
1 BAR MA 1"x¼"x7¼"	1 BAR MA 1"x¼"x9⅜"	1 BAR MA 1"x¼"x1'-0"
2 BARS MB 1"x¼"x10"	2 BARS MB 1"x¼"x1'-0"	2 BARS MB 1"x¼"x1'-2½"
2 BARS MC 3"x⅜"x11"	2 BARS MC 3"x⅜"x1'-1"	2 BARS MC 3"x⅜"x1'-3"

NOTES:

NOTE A: END OF WELD SHALL BE SMOOTH AND FLUSH WITH WEB CUT, ¼" MIN. EFFECTIVE THROAT.

NOTE B: BAR MC SHALL BE TACK WELDED TO FLANGE AT SPLICE TO BACK UP END OF FLANGE WELD, REMOVE MC AFTER WELD IS COMPLETED. END OF WELD MUST BE SMOOTH AND FLUSH EDGE OF FLANGE. GRIND WELD SMOOTH WITH EDGE OF FLANGE IF PILE IS UNSUPPORTED IN WELD AREA SUCH AS IN AIR, WATER, OR SOFT MUD, ¼" MIN. EFFECTIVE THROAT.

NOTE C: LET WELDS COOL TO AIR TEMPERATURE BEFORE RESUMING THE PILE DRIVING.

NOTE D: NO PILE SPLICING SHALL BE ALLOWED ON ANY PORTION OF PILE THAT IS TO REMAIN EXPOSED OR TO BE ABOVE FINISHED GROUNDLINE IN COMPLETED STRUCTURE.

NOTE E: ALL SPLICE MATERIALS SHALL BE ASTM A709, GRADE 50.

NOTE F: THE 0.25 INCH THICKNESS FOR MA AND MB BARS SPECIFIED IN THE 'SPLICE MATERIAL REQUIREMENTS' TABLE MAY BE REDUCED TO A MINIMUM OF 0.203 INCH THICKNESS

STEEL H-PILE SPLICE DETAILS

3"=1'-0"

PROJECT SPECIFIC PILE NOTES:

1. PILE TYPE:
   THIS PROJECT SHALL UTILIZE HP12x53 PILES CONFORMING TO ASTM A709, GRADE 50.
2. ESTIMATED PRODUCTION PILE LENGTH VARIES BETWEEN SUBSTRUCTURE UNITS, SEE PILE INSTALLATION DATA TABLE ON DWG. PL-01 FOR ESTIMATED PRODUCTION PILE LENGTH.
3. REQUIRED TEST PILE LENGTH IS EQUAL TO THE ESTIMATED PRODUCTION PILE LENGTH.
4. ALL PILES SHALL BE DRIVEN TO A NOMINAL BEARING RESISTANCE OF 385 KIPS. THE NOMINAL BEARING RESISTANCE PROVIDES A FACTORED BEARING RESISTANCE OF 250 KIPS USING A RESISTANCE FACTOR OF 0.65.
5. REFER TO THE PILE INSTALLATION DATA TABLE ON DWG. PL-01 FOR MINIMUM TIP ELEVATION.

GENERAL PILE NOTES:

1. FOR MORE INFORMATION REGARDING PILE DRIVING, INSTALLATION, MATERIALS, AND FABRICATION, REFER TO SECTION 605 - DRIVEN PILES OF THE STANDARD SPECIFICATIONS.
2. EACH TEST PILE SHALL BE DYNAMICALLY TESTED BY THE CONTRACTOR IN ACCORDANCE WITH ITEM 605201 - DYNAMIC PILE TESTING BY CONTRACTOR. THE QUANTITY FOR DYNAMIC PILE TESTING SHALL INCLUDE ONE FOR THE INITIAL DRIVE AND ONE FOR THE RE-STRIKE OF EACH TEST PILE. THE NEED TO RE-STRIKE EITHER A TEST PILE OR A PRODUCTION PILE SHALL BE THE SOLE DECISION OF THE ENGINEER.
3. WAVE EQUATION ANALYSIS SHALL BE SUBMITTED BY THE CONTRACTOR FOR REVIEW BY THE ENGINEER (ELECTRONIC PREFERRED, OTHERWISE 8 COPIES MINIMUM).
4. ALL PILES WITHIN EACH SUBSTRUCTURE UNIT SHALL BE ORDERED THE SAME LENGTH (I.e. WITHOUT A LONGER TEST PILE). TEST PILES, AS NOTED, SHALL BE DRIVEN FIRST TO ESTABLISH DRIVING CRITERIA FOR THE OTHER PILES IN EACH SUBSTRUCTURE ELEMENT. AN ADDITIONAL 5' HAS BEEN ADDED TO THE DESIGN LENGTH OF EACH PILE AS A CONTINGENCY.

   FOR PILE INSTALLATION DATA TABLES, SEE PILE LAYOUT PLAN ON DWG. PL-01.

STEEL H-PILE NOTES:

1. STEEL H-PILE SPLICE DETAILS APPLY ONLY TO HP 10", HP 12", AND HP 14" PILES.
2. THE CONTRACTOR MAY CONSIDER USING ALTERNATE STEEL H-PILE SPLICE DETAILS. ALL ALTERNATE DETAILS FOR STEEL H-PILE SPLICING SHALL BE SUBMITTED TO THE DEPARTMENT FOR APPROVAL, HOWEVER THERE IS NO GUARANTEE THE ALTERNATE SPLICE DETAIL WILL BE ACCEPTED. THE DEPARTMENT OR ENGINEER MAY REJECT ANY ALTERNATE FOR ANY REASON. USE OF ALTERNATE SPLICE DETAILS SHALL BE AT NO ADDITIONAL COST TO THE DEPARTMENT.
3. H-PILE SPLICES WILL NOT BE PERMITTED WITHIN 15' OF THE BOTTOM OF PILE CAP ELEVATION.
4. ALL PILES SHALL BE INSTALLED WITH PILE TIP PROTECTION (PILE SHOES) TO PREVENT PILE DAMAGE DURING DRIVING, SEE DETAIL THIS SHEET.
5. THE CONTRACTOR MAY CONSIDER ALTERNATE PILE TIP PROTECTION (PILE SHOE) DETAILS. ALL ALTERNATE DETAILS FOR PILE TIP PROTECTION SHALL BE SUBMITTED TO THE DEPARTMENT FOR APPROVAL, THERE IS NO GUARANTEE THE ALTERNATE PILE TIP PROTECTION DETAIL WILL BE ACCEPTED. THE DEPARTMENT OR ENGINEER MAY REJECT ANY ALTERNATE FOR ANY REASON. USE OF ALTERNATE PILE TIP PROTECTION DETAILS SHALL BE AT NO ADDITIONAL COST TO THE DEPARTMENT.
6. PRIOR TO DRIVING PILES, THE CONTRACTOR SHALL PERFORM PRECONSTRUCTION SURVEY OF STRUCTURES ADJACENT TO BRIDGE 1-750. THE CONTRACTOR SHALL MONITOR SITE FOR VIBRATION DURING PILE DRIVING OPERATIONS ACCORDING TO SPECIAL PROVISION FOR PROTECTION OF EXISTING STRUCTURES.

PILE DRIVING SHOE NOTES:

1. PILE SHOES SHALL CONFORM TO ASTM A27, GRADE 65-35. ALL FILLETS SHALL BE ⅜".
2. PILE SHOE TO BE WELDED TO PILE WITH A CONTINUOUS SINGLE BEVEL GROOVE WELD ALONG OUTSIDE FACE OF FLANGE. EXTERIOR FACE OF FLANGE TO BE CUT BEVELED AT 45°, PRIOR TO WELDING.
3. FOR EACH SHIPMENT OF PILE SHOES, A FOUNDRY CERTIFICATION VERIFYING MATERIAL MEETS THE SPECIFICATIONS IS REQUIRED.

SIZE OF PILE	SIZE OF 45 BEVEL	SIZE OF GROOVE WELD
12x53	¼"	5/16"

UNOFFICIAL WEBSITE COPY

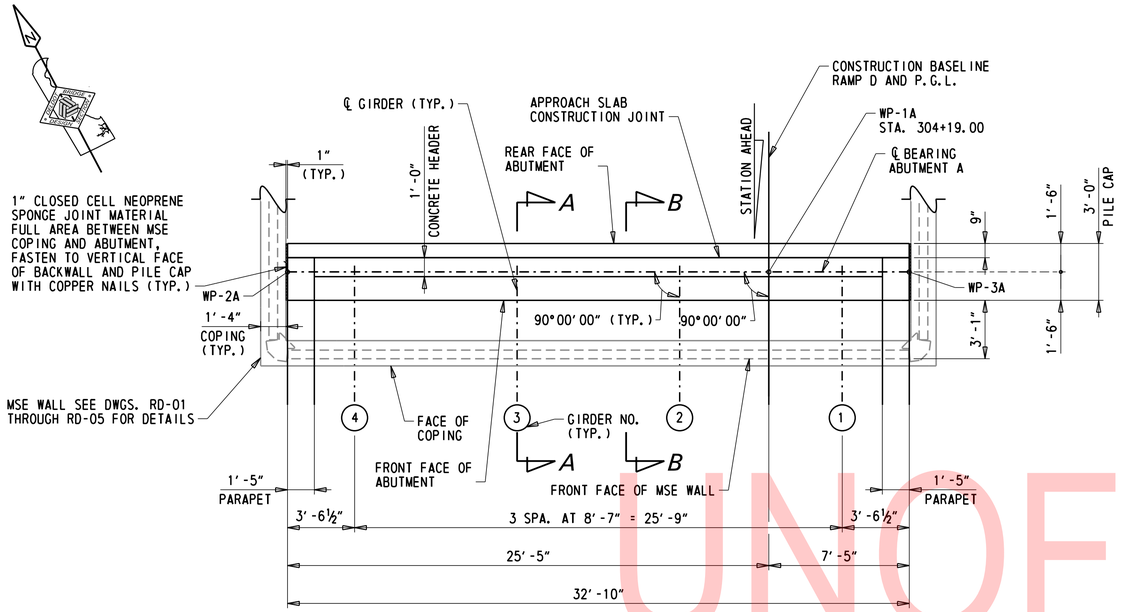

PLAN - ABUTMENT A

¼" = 1'-0"

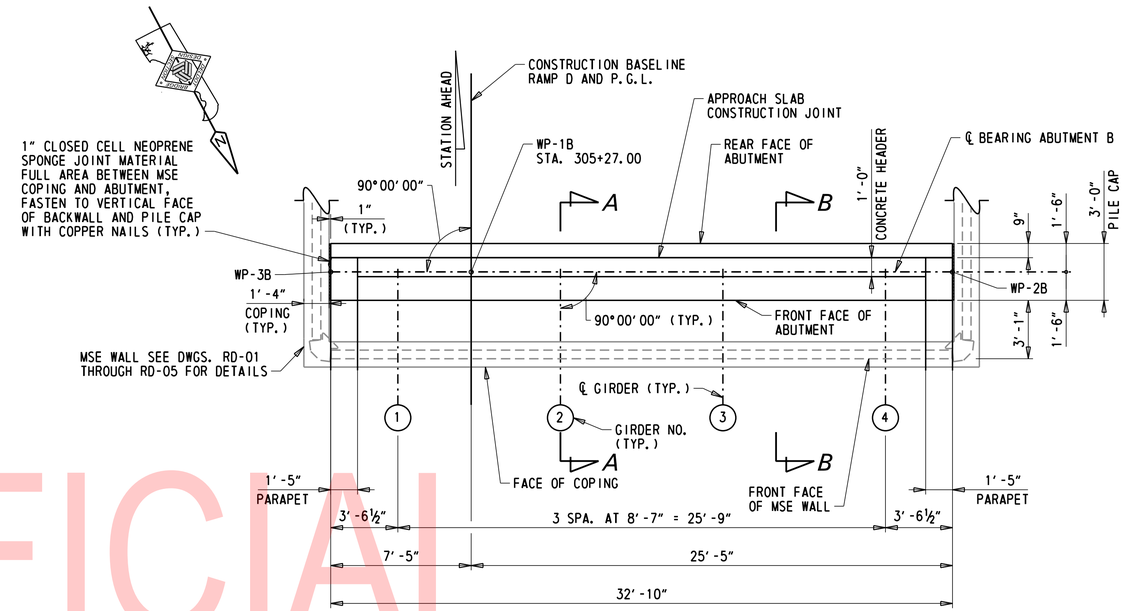

PLAN - ABUTMENT B

¼" = 1'-0"

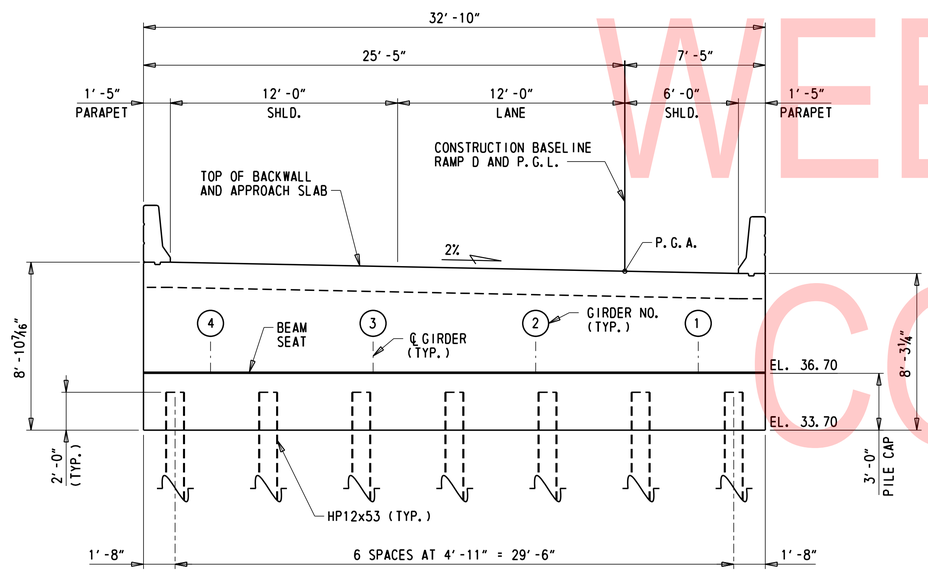

ELEVATION - ABUTMENT A

¼" = 1'-0"

NOTE:

MSE WALLS NOT SHOWN IN ELEVATION FOR CLARITY.

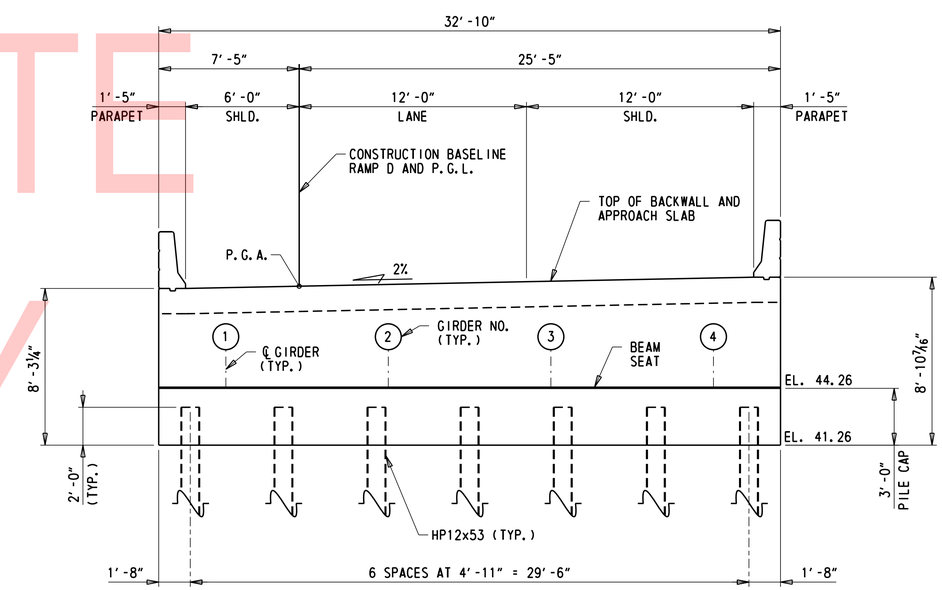

ELEVATION - ABUTMENT B

¼" = 1'-0"

NOTE:

MSE WALLS NOT SHOWN IN ELEVATION FOR CLARITY.

NOTES:

1. FOR SECTIONS A-A AND B-B, SEE DWG. AB-02.
2. FOR ABUTMENTS A AND B REINFORCEMENT, SEE DWGS. AB-03 AND AB-04, RESPECTIVELY.
3. FOR WORKING POINT INFORMATION, SEE DWG. FT-02.
4. FOR PROPOSED ROADWAY ELEVATIONS, SEE DWGS. FD-01 AND AS-01.

UNOFFICIAL WEBSITE COPY

N:\31997-004\Contract_Ramp_D\CADD\Bridge\BR1-750_AB01.dgn
8/23/2019 4:32:39 PM

ADDENDA / REVISIONS	SCALE AS NOTED	REHABILITATION OF I-95, 2ND STREET ON-RAMP IMPROVEMENTS	CONTRACT T201907402	BRIDGE NO. 1 750 6148	ABUTMENTS A & B PLAN AND ELEVATION	AB-01
			COUNTY NEW CASTLE	DESIGNED BY: D. NIZAMOFF		SECTION WRA
				CHECKED BY: W. GESCHREI		SHEET NO. 163

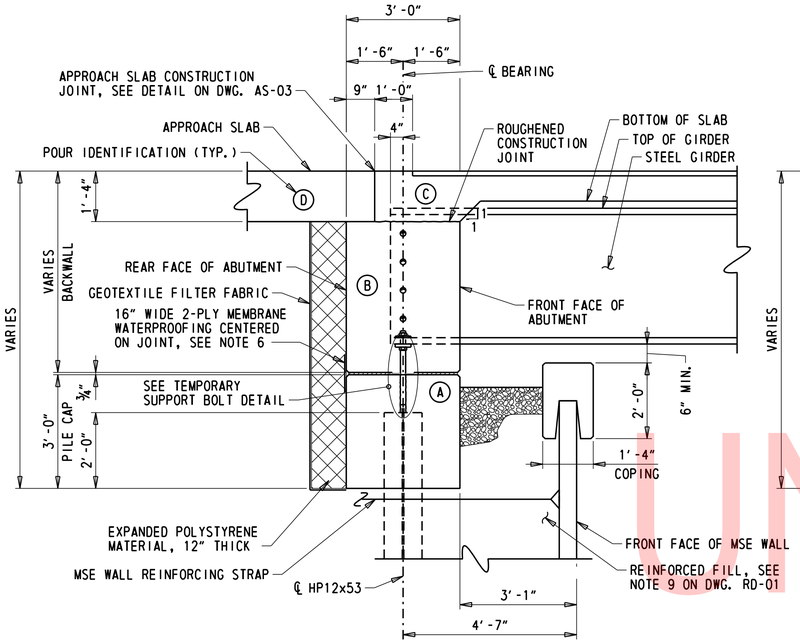

ABUTMENT TYPICAL SECTION AT GIRDERS

(SECTION A-A)

½" = 1'-0"

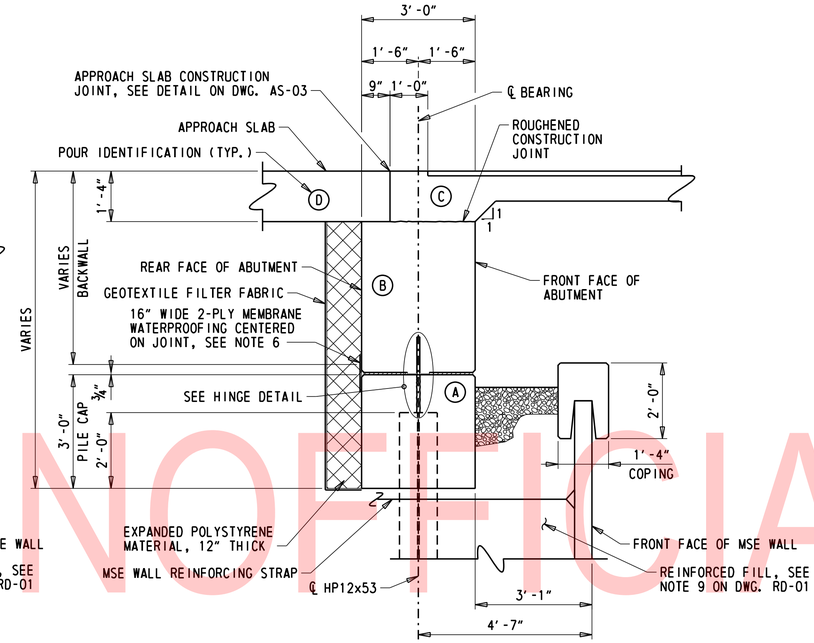

ABUTMENT TYPICAL SECTION BETWEEN GIRDERS

(SECTION B-B)

½" = 1'-0"

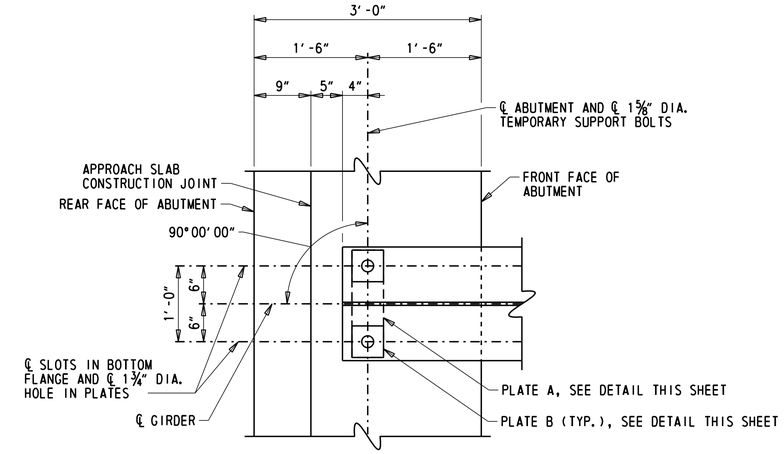

TEMPORARY SUPPORT PLATE DETAIL

1" = 1'-0"

NOTE:
SHEAR STUD CONNECTORS NOT SHOWN FOR CLARITY.

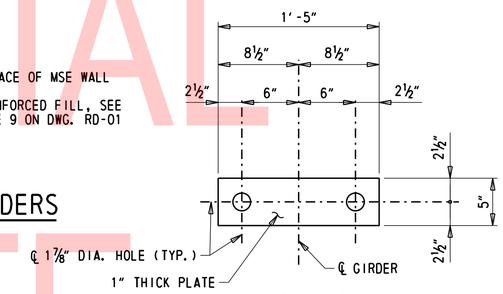

PLATE A

1½" = 1'-0"

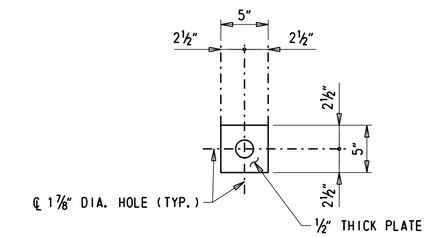

PLATE B

1½" = 1'-0"

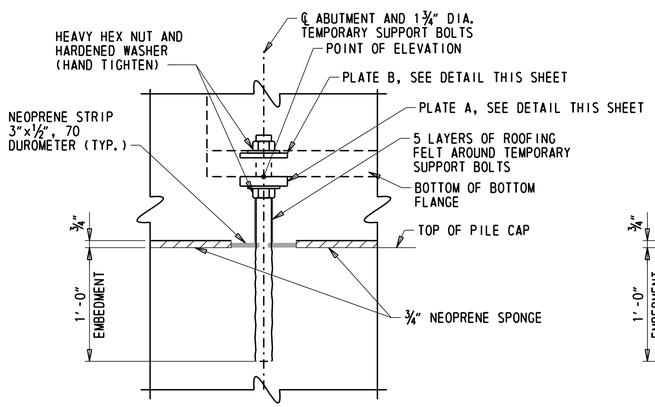

TEMPORARY SUPPORT BOLT DETAIL

1½" = 1'-0"

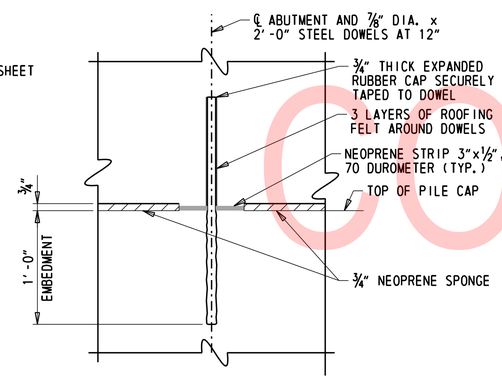

HINGE DETAIL

1½" = 1'-0"

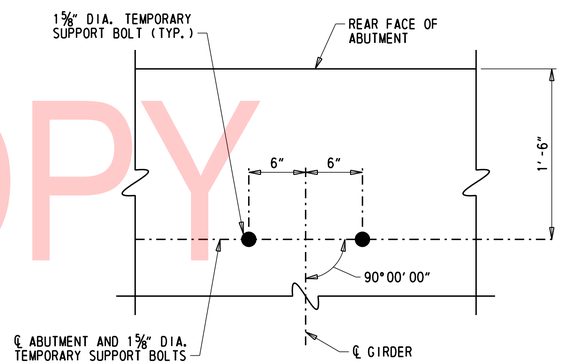

TEMPORARY SUPPORT BOLT LAYOUT

1½" = 1'-0"

NOTES:

1. NEOPRENE SPONGE SHALL BE CLOSED CELL CONFORMING TO ASTM A1056, TYPE 2.
2. STEEL DOWELS SHALL BE ASTM A615, GR. 60 AND SHALL BE GALVANIZED. EXPANDED RUBBER CAP SHALL CONFORM TO ASTM D1056.
3. TEMPORARY SUPPORT BOLTS SHALL BE ASTM F1554, GR. 55, SWEDGED, AND GALVANIZED. HEAVY HEX NUTS AND HARDENED WASHERS SHALL BE ASTM A563 AND ASTM F436, RESPECTIVELY.
4. EXPANDED POLYSTYRENE (EPS) MATERIAL SHALL BE IN ACCORDANCE WITH ASTM C578, TYPE IV. PAYMENT FOR EPS MATERIAL WILL BE INCIDENTAL TO ITEM 610002 - PORTLAND CEMENT CONCRETE MASONRY, ABUTMENT ABOVE FOOTING, CLASS A.
5. ROOFING FELT SHALL CONFORM TO ASTM D173.
6. 2-PLY MEMBRANE WATERPROOFING SHALL CONFORM TO ASTM D449 AND ASTM D173. APPLY 1 PRIME COAT, 3 MOP COATS, AND 2 LAYERS OF WATERPROOFING FABRIC.
7. PAYMENT FOR TEMPORARY SUPPORT BOLT ASSEMBLY, STEEL DOWELS, RUBBER CAP, NEOPRENE SPONGE, NEOPRENE STRIPS, ROOFING FELT, AND 2-PLY MEMBRANE WATERPROOFING WILL BE INCIDENTAL TO ITEM 610001 - PORTLAND CEMENT CONCRETE MASONRY, ABUTMENT FOOTING, CLASS A.
8. FOR LOCATION OF SECTION A-A AND B-B AT ABUTMENTS A AND B, SEE DWG. AB-01.
9. FOR MSE WALL ELEVATIONS, SEE DWGS. RD-01 THROUGH RD-04.
10. FOR ABUTMENTS A AND B REINFORCEMENT, SEE DWGS. AB-03 AND AB-04, RESPECTIVELY.
11. THE ABUTMENTS SHALL BE CONSTRUCTED WITH THE FOLLOWING SEQUENCE OF CONSTRUCTION:
    1. DEMOLISH EXISTING BRIDGE 1-750.
    2. INSTALL HP12x53 PILES.
    3. CONSTRUCT MSE WALL TO BOTTOM OF PILE CAP.
    4. CONSTRUCT PILE CAP (POUR A).
    5. CONSTRUCT REMAINDER OF MSE WALLS AND COPING.
    6. ERECT STEEL GIRDERS.
    7. CONSTRUCT BACKWALL TO UNDERSIDE OF APPROACH SLAB (POUR B).
    8. POUR BRIDGE DECK (POUR C).
    9. POUR APPROACH SLAB (POUR D).
    10. POUR PARAPETS ON BRIDGE DECK AND APPROACH SLABS.
    11. CONSTRUCT LATEX MODIFIED CONCRETE (LMC) OVERLAY.

    NO ALTERNATE SEQUENCES OF CONSTRUCTION WILL BE PERMITTED FOR THE ABUTMENTS WITHOUT APPROVAL BY THE ENGINEER.

UNOFFICIAL WEBSITE COPY

ADDENDA / REVISIONS	SCALE AS NOTED	REHABILITATION OF I-95, 2ND STREET ON-RAMP IMPROVEMENTS	CONTRACT T201907402	BRIDGE NO. 1 750 6148	ABUTMENTS A & B SECTION AND DETAILS	AB-02 SECTION WRA
			COUNTY NEW CASTLE	DESIGNED BY: D. NIZAMOFF		SHEET NO. 164
				CHECKED BY: W. GESCHREI		

N:\31987-004\Contract_Ramp_D\CADD\Bridge\BRI-750_AB02.dgn
8/23/2019 4:32:39 PM

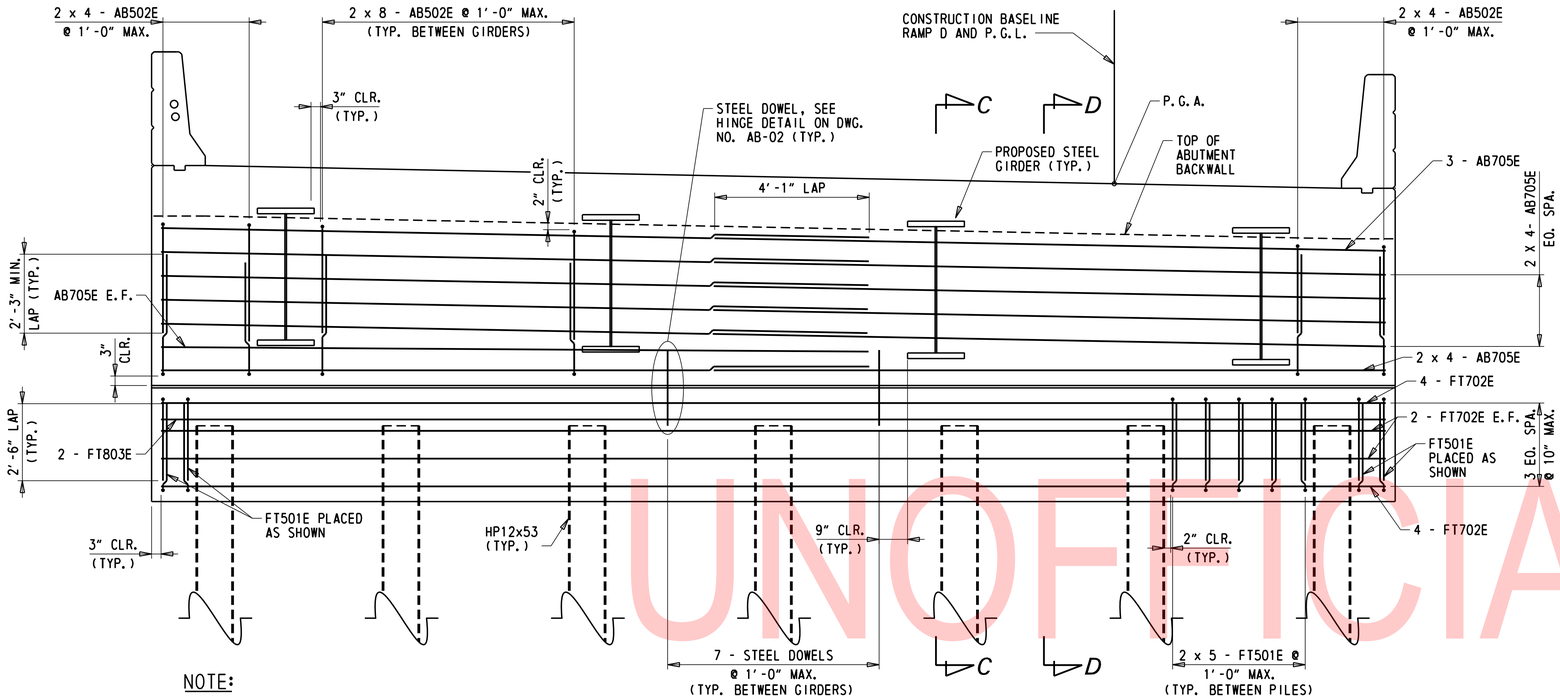

NOTE:
TEMPORARY SUPPORT BOLTS NOT SHOWN IN ELEVATION FOR CLARITY.

ABUTMENT A REINFORCEMENT - ELEVATION

½" = 1'-0"

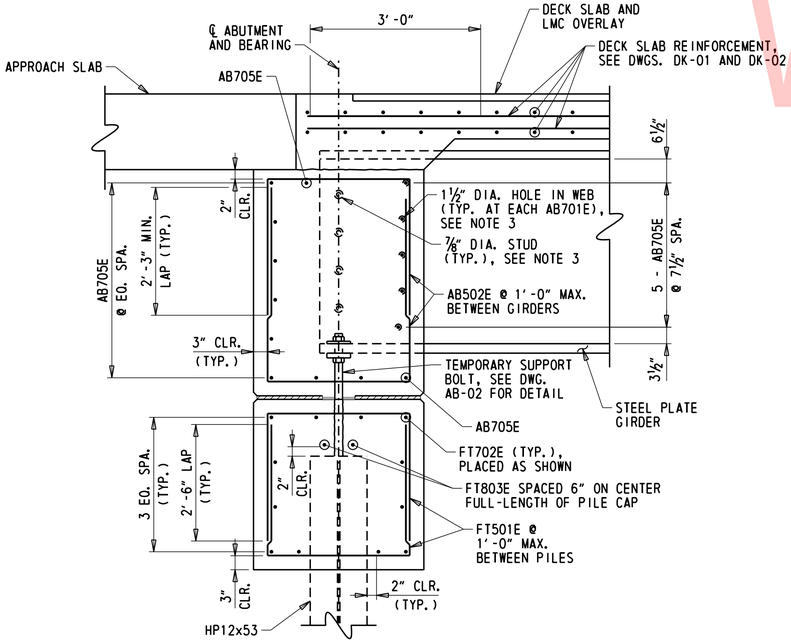

SECTION C-C

¾" = 1'-0"

NOTE:
APPROACH SLAB REINFORCEMENT NOT SHOWN FOR CLARITY.

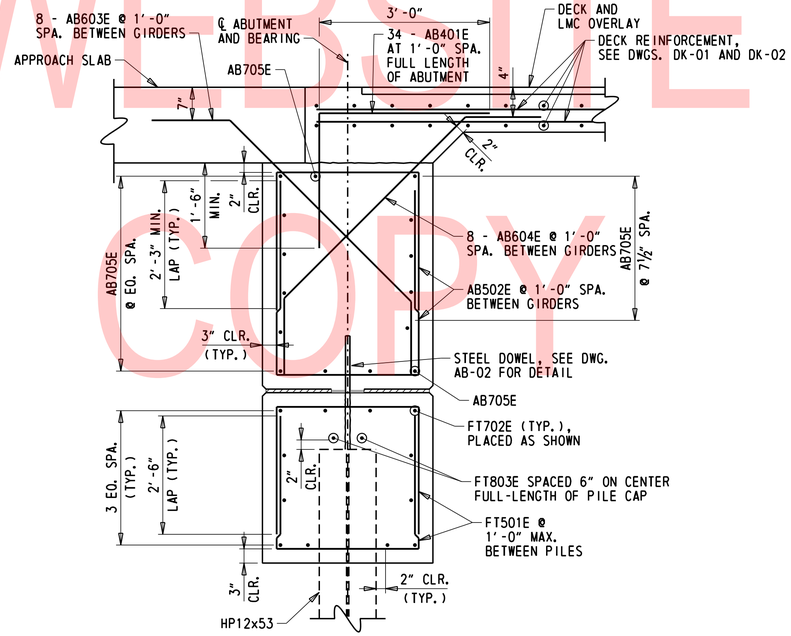

SECTION D-D

¾" = 1'-0"

NOTE:
APPROACH SLAB REINFORCEMENT NOT SHOWN FOR CLARITY.

NOTES:

1. FOR ABUTMENT A PLAN AND ELEVATION, SEE DWG. AB-01.
2. FOR ABUTMENT B REINFORCEMENT - ELEVATION, SEE DWG. AB-04.
3. FOR DETAILS OF STUDS AND HOLES IN WEB OF GIRDER, SEE DWG. BM-01.

UNOFFICIAL WEBSITE COPY

N:\31987-004\Contract_Ramp_D\CADD\Bridge\BR1-750_AB03.dgn
8/23/2019 4:32:40 PM

ADDENDA / REVISIONS	SCALE AS NOTED	REHABILITATION OF I-95, 2ND STREET ON-RAMP IMPROVEMENTS	CONTRACT T201907402	BRIDGE NO. 1 750 6148	ABUTMENT A REINFORCEMENT DETAILS AND SECTIONS	AB-03
			COUNTY NEW CASTLE	DESIGNED BY: D. NIZAMOFF		SECTION WRA
				CHECKED BY: W. GESCHREI		SHEET NO. 165

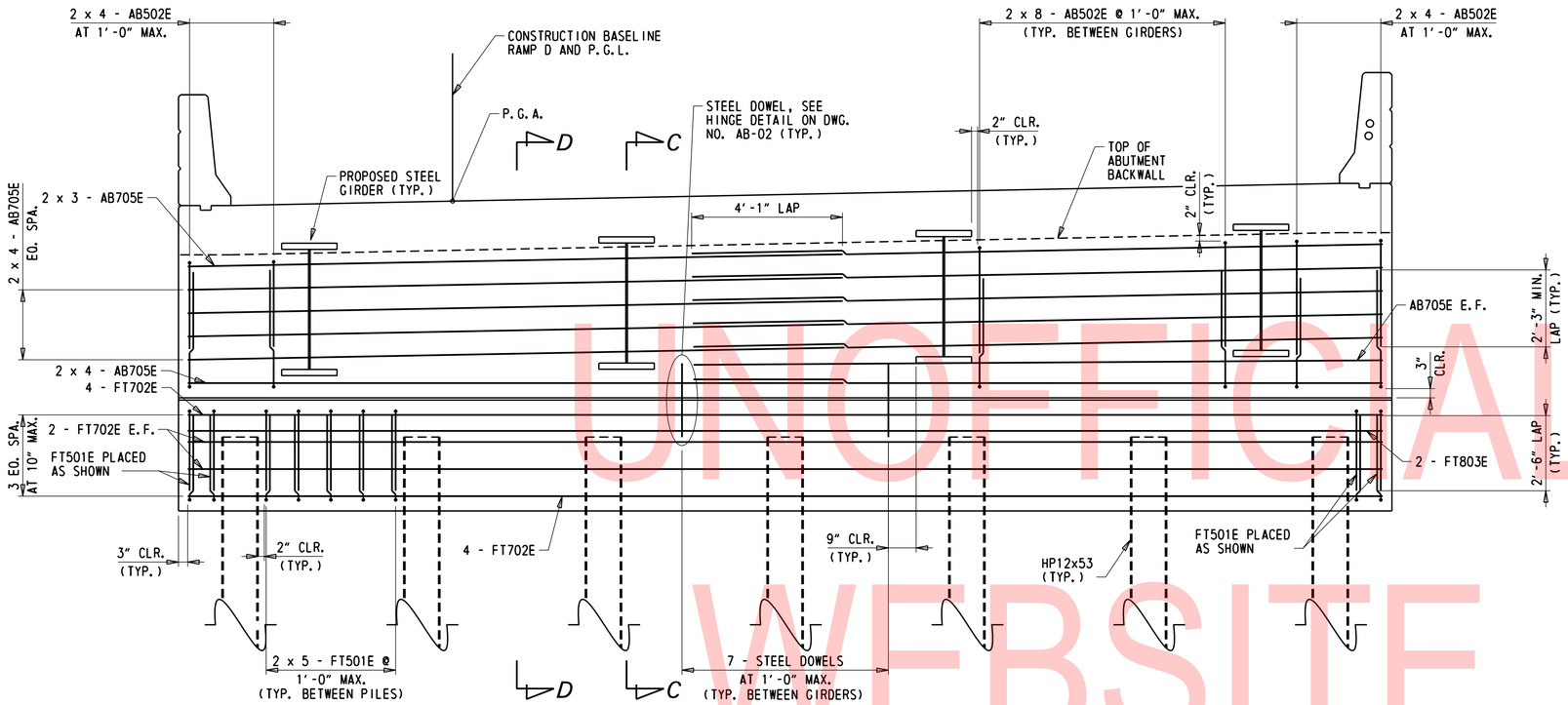

ABUTMENT B REINFORCEMENT - ELEVATION

½" = 1'-0"

NOTE:

TEMPORARY SUPPORT BOLTS NOT SHOWN IN ELEVATION FOR CLARITY.

UNOFFICIAL WEBSITE COPY

NOTES:

1. FOR ABUTMENT B PLAN AND ELEVATION, SEE DWG. AB-01.
2. FOR SECTION C-C AND SECTION D-D, SEE DWG. AB-03.

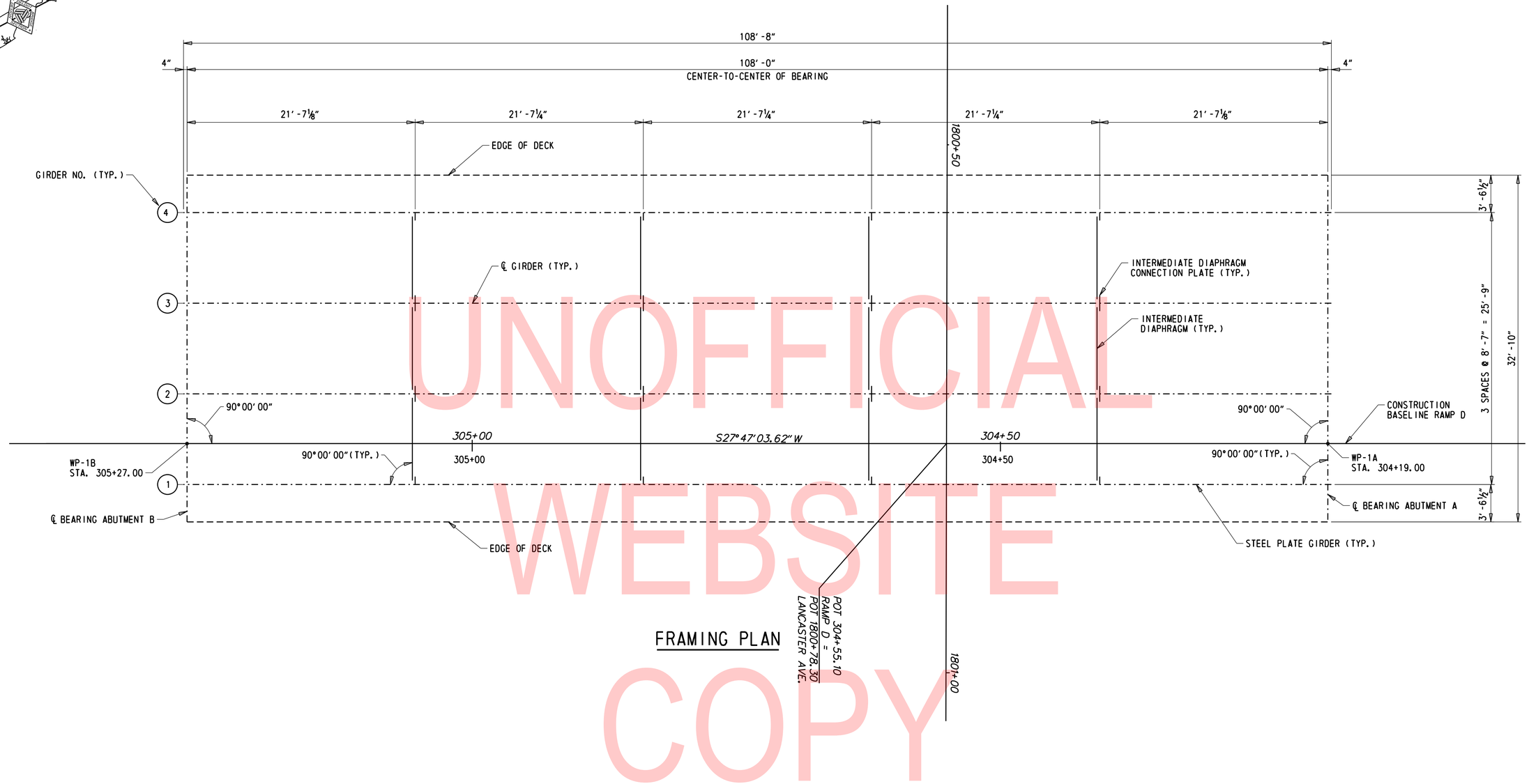

FRAMING PLAN

UNOFFICIAL WEBSITE COPY

NOTES:

1. FOR INTERMEDIATE DIAPHRAGM DETAILS, SEE DWG. BM-02.

N:\31987-004\Contract_Ramp_D\CADD\Bridge\BRI-750_FR01.dgn
8/23/2019 4:32:42 PM

ADDENDA / REVISIONS	

SCALE
0 5 10 15
FEET

REHABILITATION OF I-95, 2ND STREET ON-RAMP IMPROVEMENTS

CONTRACT	BRIDGE NO.	1 750 6148
T201907402	DESIGNED BY: D. NIZAMOFF	
COUNTY		
NEW CASTLE	CHECKED BY: W. GESCHREI	

FRAMING PLAN

FR-01
SECTION
WRA
SHEET NO.
167

STEEL GIRDER CAMBER NOTES:

1. ALL GIRDERS SHALL BE CAMBERED FOR DEAD LOAD ORDINATES TO THE DIMENSIONS SHOWN ON THOSE PLANS. THE CAMBER TOLERANCE IS ZERO UNDER TO ¾ INCH OVER.
2. AFTER THE ERECTION OF STEEL AND THE CONNECTIONS OF THE STEEL DIAPHRAGMS ARE COMPLETE, THE CONTRACTOR SHALL OBTAIN ELEVATIONS AT TENTH POINTS SHOWN ON THE TOP FLANGES OF ALL GIRDERS TO DETERMINE THE REQUIRED HAUNCH THICKNESS. ALL THE DATA SHALL BE SUBMITTED WITH DETAILS OF STAY-IN-PLACE FORMS FOR REVIEW AND APPROVAL BY THE ENGINEER IN THE FIELD.
3. AFTER THE ERECTION OF STEEL AND THE CONNECTIONS OF THE STEEL DIAPHRAGMS ARE COMPLETE, THE CONTRACTOR SHALL VERIFY THAT ALL UNDER CLEARANCES ARE SUFFICIENT AFTER SUBTRACTING THE CALCULATED TOTAL DEAD LOAD DEFLECTION.
4. VARY THICKNESS OF HAUNCH TO ACCOUNT FOR ANY INACCURACIES IN CAMBER.
5. POSITIVE CAMBER VALUES IN THE TABLE INDICATE THE UPWARD DIRECTION.

LEGEND:

DSL = DENOTES DEFLECTION DUE TO STRUCTURAL STEEL

DLC = DENOTES DEFLECTION DUE TO CONCRETE SLAB, HAUNCH, & S.I.P. FORMS

SDL = DENOTES DEFLECTION DUE TO PARAPET & LMC OVERLAY

TD&C= DENOTES TOTAL DEAD LOAD DEFLECTION & CAMBER

VCO = DENOTES CAMBER FOR VERTICAL CURVE ORDINATE DUE TO ROADWAY PROFILE

NOTES:

1. THE GIRDERS SHALL BE PLUMB UNDER FULL DEAD LOAD.
2. THE CONTRACTOR IS RESPONSIBLE FOR THE ENTIRE ERECTION OF THE BRIDGE, THE CONTRACTOR SHALL SUBMIT DRAWINGS SEALED BY A PROFESSIONAL ENGINEER REGISTERED IN THE STATE OF DELAWARE, ILLUSTRATING FULLY THE PROPOSED METHOD OF ERECTION. THE DRAWINGS SHALL SHOW DETAILS OF ALL TEMPORARY SHORING, FALSEWORK, BRACING, GUYS, DEAD-MEN, LIFTING DEVICES AND ATTACHMENT TO BRIDGE MEMBERS. THE DRAWINGS SHALL ALSO INCLUDE THE SEQUENCE OF ERECTION, LOCATION OF CRANES, CRANE CAPACITIES, LOCATION OF LIFTING POINTS ON THE BRIDGE MEMBERS AND WEIGHTS OF MEMBERS. THE PLANS AND DRAWINGS SHALL BE COMPLETE IN DETAIL FOR ALL ANTICIPATED PHASES AND CONDITIONS DURING ERECTION.
3. THERE SHALL BE NO FIELD WELDING TO THE TOP FLANGE, EXCEPT FOR SHEAR STUDS.
4. INTERMEDIATE DIAPHRAGM CONNECTION PLATES SPACING NOT SHOWN, FOR LOCATION OF INTERMEDIATE DIAPHRAGM CONNECTION PLATES, SEE DWG. FR-01.
5. FOR INTERMEDIATE DIAPHRAGM CONNECTION PLATE DETAILS, SEE DWG. BM-02.
6. FOR SHEAR STUD DETAILS, SEE DWG. SD-01.

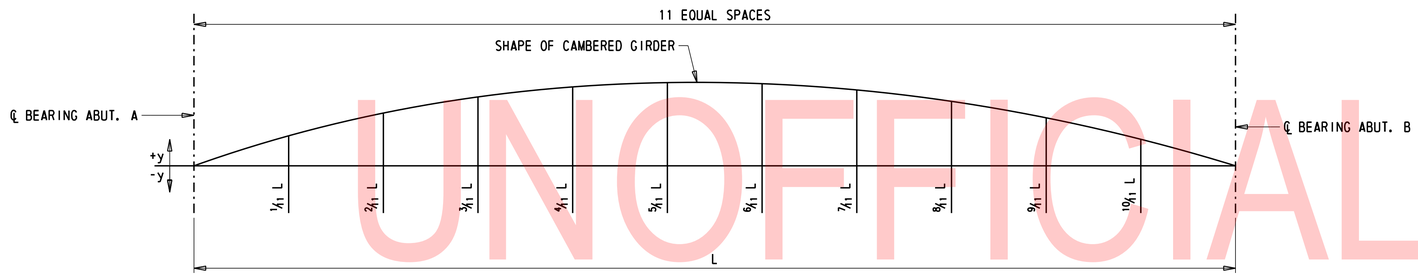

DEFLECTION AND TOTAL CAMBER (INCHES)

PROPOSED GIRDERS		℄ BRG. ABUT. A	1/11 L	2/11 L	3/11 L	4/11 L	5/11 L	6/11 L	7/11 L	8/11 L	9/11 L	10/11 L	℄ BRG. ABUT. B
GIRDERS 1 AND 4	DSL	0	5/16	9/16	13/16	15/16	1	1	15/16	13/16	9/16	5/16	0
	DLC	0	1 1/8	2 1/8	2 15/16	3 1/2	3 13/16	3 13/16	3 1/2	2 15/16	2 1/8	1 1/8	0
	SDL	0	1/4	1/2	11/16	7/8	15/16	15/16	7/8	11/16	1/2	1/4	0
	TD&C	0	1 11/16	3 3/16	4 7/16	5 5/16	5 3/4	5 3/4	5 5/16	4 7/16	3 3/16	1 11/16	0
	VCO	0	0	0	0	0	0	0	0	0	0	0	0
	TD&C + VCO	0	1 11/16	3 3/16	4 7/16	5 5/16	5 3/4	5 3/4	5 5/16	4 7/16	3 3/16	1 11/16	0
GIRDERS 2 AND 3	DSL	0	5/16	9/16	13/16	1	1 1/16	1 1/16	1	13/16	9/16	5/16	0
	DLC	0	1 1/16	2	2 3/4	3 5/16	3 9/16	3 9/16	3 5/16	2 3/4	2	1 1/16	0
	SDL	0	1/8	1/4	3/8	7/16	7/16	7/16	7/16	3/8	1/4	1/8	0
	TD&C	0	1 1/2	2 13/16	3 15/16	4 3/4	5 1/16	5 1/16	4 3/4	3 15/16	2 13/16	1 1/2	0
	VCO	0	0	0	0	0	0	0	0	0	0	0	0
	TD&C + VCO	0	1 1/2	2 13/16	3 15/16	4 3/4	5 1/16	5 1/16	4 3/4	3 15/16	2 13/16	1 1/2	0

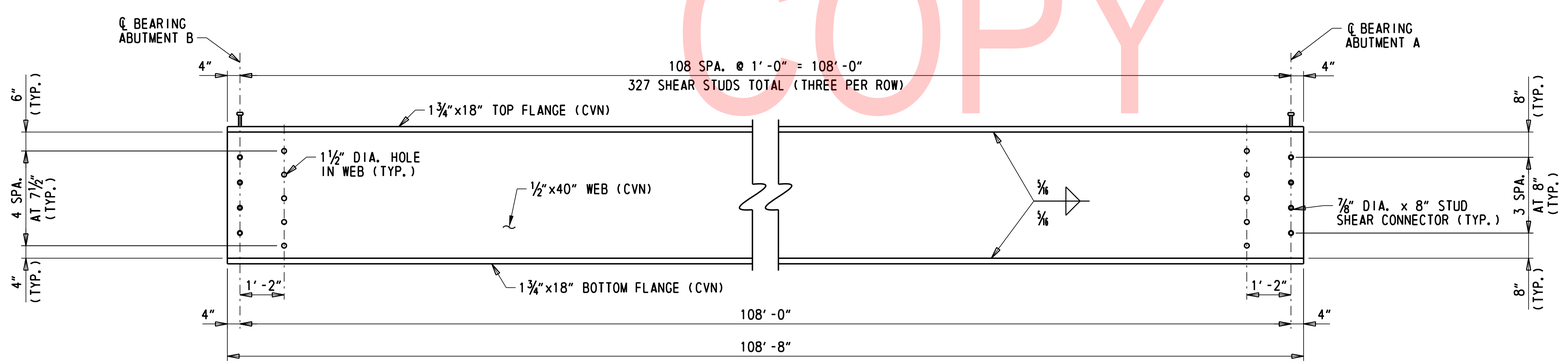

GIRDER ELEVATION

½" = 1'-0"

NOTE:

INTERMEDIATE DIAPHRAGM CONNECTION PLATES NOT SHOWN FOR CLARITY.

UNOFFICIAL WEBSITE COPY

ADDENDA / REVISIONS		SCALE AS NOTED	REHABILITATION OF I-95, 2ND STREET ON-RAMP IMPROVEMENTS	CONTRACT T201907402	BRIDGE NO. 1 750 6148	GIRDER AND CAMBER DETAILS	BM-01 SECTION WRA
				COUNTY NEW CASTLE	DESIGNED BY: D. NIZAMOFF		SHEET NO. 168
					CHECKED BY: W. GESCHREI		

N:\31987-004\Contract_Ramp_D\CADD\Bridge\BR1-750_BM01.dgn
8/23/2019 4:32:42 PM

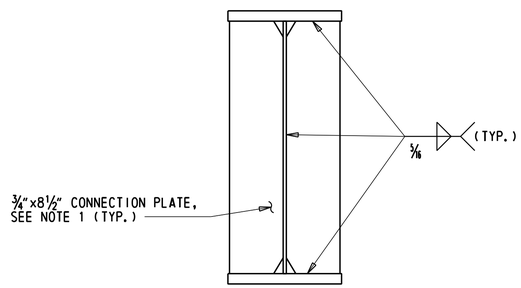

CONNECTION PLATE DETAIL FOR INTERMEDIATE DIAPHRAGMS

1" = 1'-0"

NOTE: CONNECTION PLATES SHALL NOT BE INSTALLED ON EXTERIOR FACE OF GIRDERS 1 AND 4.

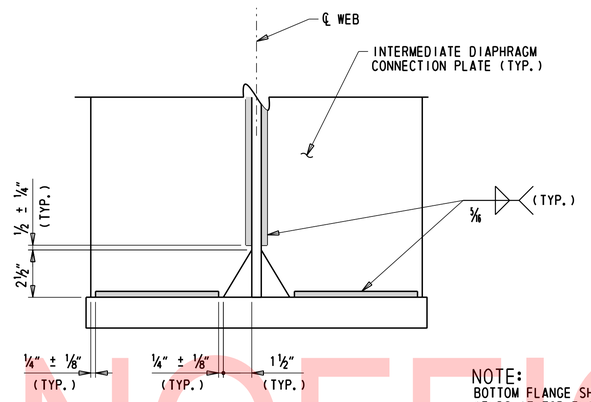

NOTE:
BOTTOM FLANGE SHOWN, WELDS AT TOP FLANGE SIMILAR.

WELD TERMINATION AND CORNER CLIP DETAILS

3" = 1'-0"

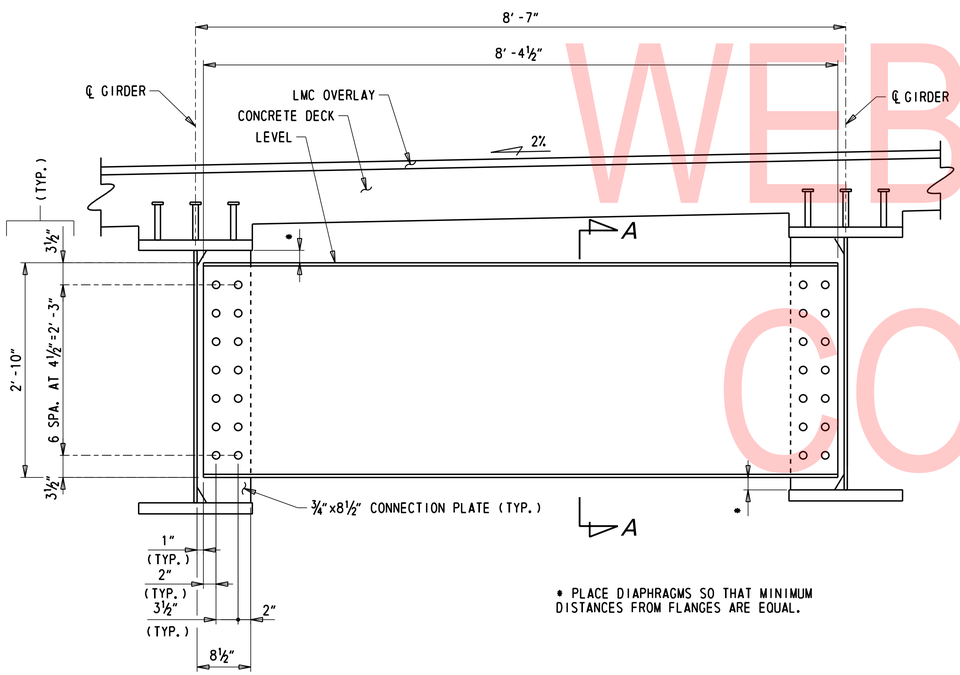

* PLACE DIAPHRAGMS SO THAT MINIMUM DISTANCES FROM FLANGES ARE EQUAL.

INTERMEDIATE DIAPHRAGM DETAILS

1" = 1'-0"

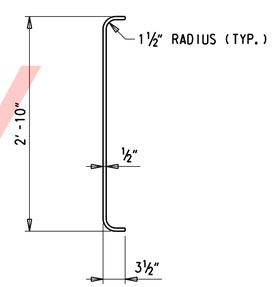

SECTION A-A

1" = 1'-0"

NOTES:

1. FOR LOCATION OF CONNECTION PLATES FOR INTERMEDIATE DIAPHRAGMS, SEE FRAMING PLAN, DWG. FR-01.
2. ALL BOLTS IN DIAPHRAGM CONNECTIONS SHALL BE 1" DIA. HIGH STRENGTH BOLTS IN CONFORMANCE WITH ASTM F 3125, GR. A 490, TYPE 1.
3. ALL BOLT HOLES IN DIAPHRAGMS, DIAPHRAGM CONNECTIONS PLATES, AND BEARING STIFFENERS SHALL BE 1 1/16".
4. THE MINIMUM ACCEPTABLE EDGE DISTANCE FOR ANY 1 1/16" DIA. HOLE SHALL BE 2".
5. ALL DIAPHRAGMS MUST BE COMPLETELY CONNECTED, WITH BOLTS FULLY PRE-TENSIONED, TO GIRDERS PRIOR TO PLACING DECK SLAB.
6. SHEAR STUDS NOT SHOWN IN CONNECTION PLATE DETAIL FOR CLARITY.

UNOFFICIAL WEBSITE COPY

ADDENDA / REVISIONS		SCALE AS NOTED	REHABILITATION OF I-95, 2ND STREET ON-RAMP IMPROVEMENTS	CONTRACT T201907402	BRIDGE NO. 1 750 6148	INTERMEDIATE DIAPHRAGM DETAILS	BM-02
				COUNTY NEW CASTLE	DESIGNED BY: D. NIZAMOFF		SECTION WRA
					CHECKED BY: W. GESCHREI		SHEET NO. 169

N:\31987-004\Contract_Ramp_D\CADD\Bridge\BR1-750_BM02.dgn
8/23/2019 4:32:43 PM

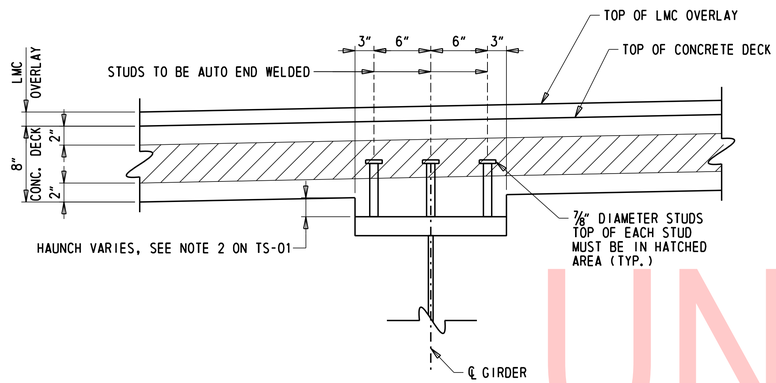

SHEAR STUD DETAIL

1½" = 1'-0"

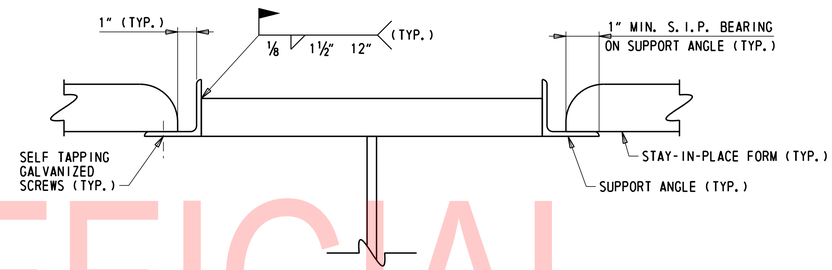

COMPRESSION FLANGE STAY-IN-PLACE FORM CONNECTION DETAIL

3" = 1'-0"

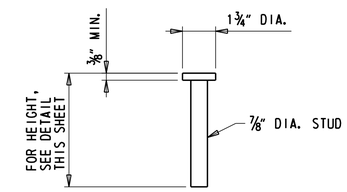

STUD DETAIL

3" = 1'-0"

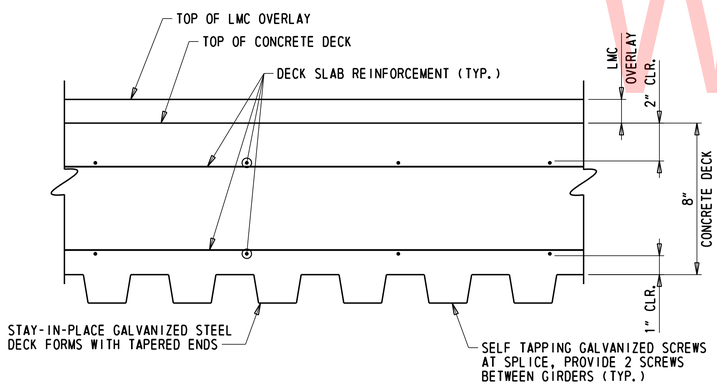

STAY-IN-PLACE FORM DETAIL

3" = 1'-0"

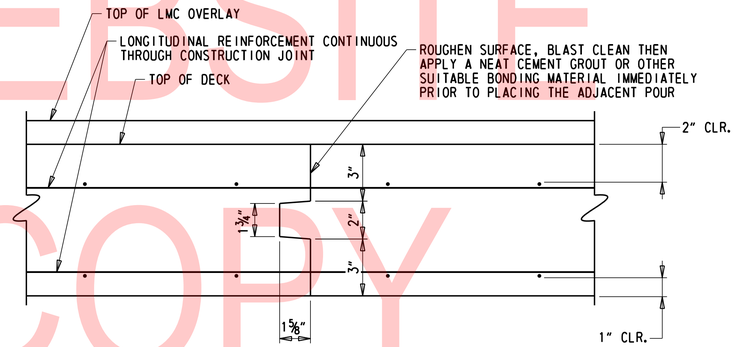

DECK CONSTRUCTION JOINT

3" = 1'-0"

STAY-IN-PLACE FORM NOTES:

1. FORMS SHALL BE VERTICALLY ADJUSTED TO ATTAIN LINE AND GRADE REQUIRED ON THE PLANS.
2. THE CONTRACTOR SHALL SUBMIT SHOP DRAWINGS FOR APPROVAL. METAL FORMS SHALL BE GALVANIZED AND MORTAR TIGHT. STEEL METAL SCREWS SHALL BE NON-CORROSIVE. SELF TAPPING SCREWS SHALL BE INSTALLED AT THE SIDE LAP OF THE SHEETS AT MID-SPAN SUPPORTS. ALL ANGLES, WELDS, AND INSERTS SHALL BE DESIGNED BY THE CONTRACTOR.
3. PAYMENT FOR ALL MATERIALS AND LABOR NEEDED FOR FORMS WILL BE INCIDENTAL TO ITEM 610017 - P.C.C. MASONRY, SUPERSTRUCTURE, CLASS D.

UNOFFICIAL WEBSITE COPY

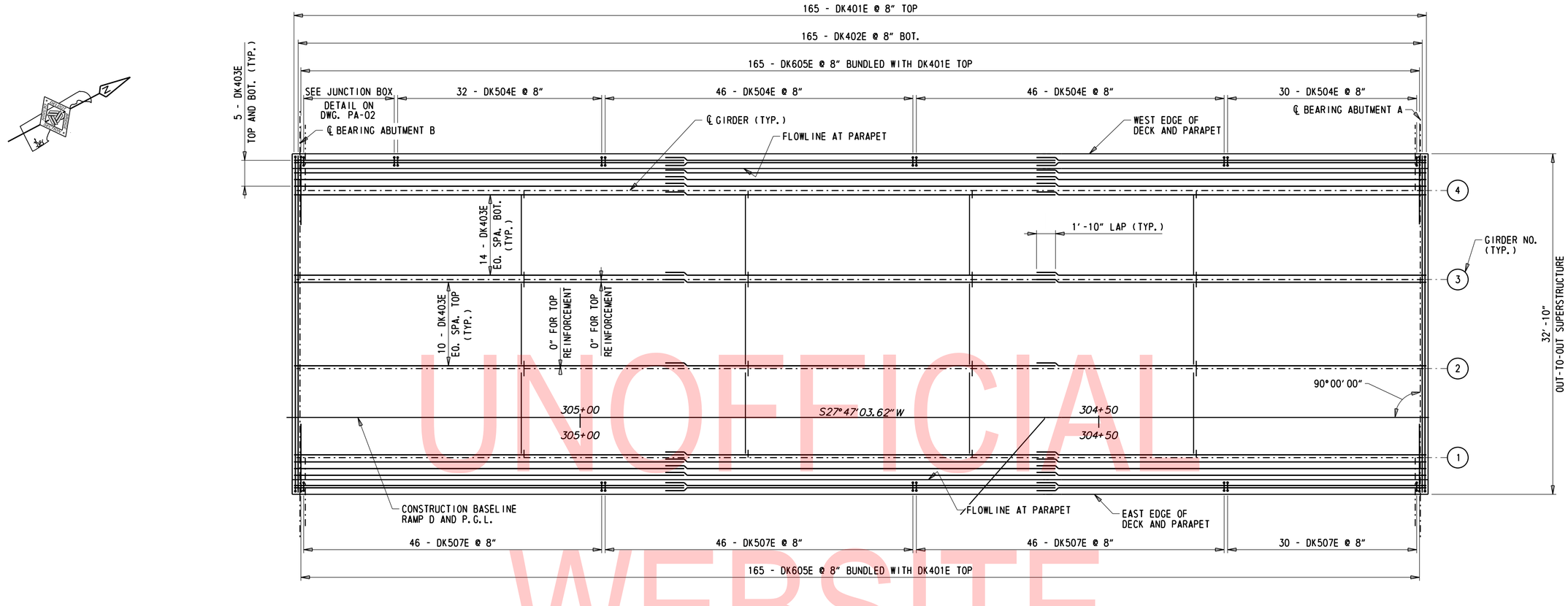

DECK REINFORCEMENT PLAN

3/16" = 1'-0"

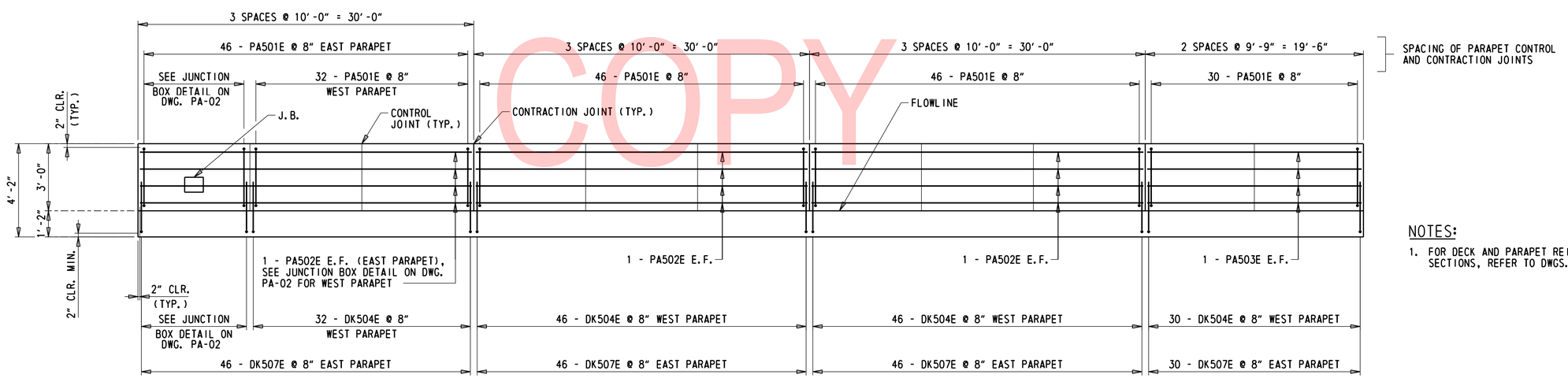

PARAPET REINFORCEMENT ELEVATION

HORIZONTAL - 3/16" = 1'-0"
VERTICAL - 3/8" = 1'-0"

NOTES:

1. FOR DECK AND PARAPET REINFORCEMENT TYPICAL SECTIONS, REFER TO DWGS. DK-02 AND PA-01.

UNOFFICIAL WEBSITE COPY

ADDENDA / REVISIONS	SCALE AS NOTED	REHABILITATION OF I-95, 2ND STREET ON-RAMP IMPROVEMENTS	CONTRACT T201907402	BRIDGE NO. 1 750 6148	DECK AND PARAPET REINFORCEMENT	DK-01
			COUNTY NEW CASTLE	DESIGNED BY: D. NIZAMOFF		SECTION WRA
				CHECKED BY: W. GESCHREI		SHEET NO. 171

N:\31987-004\Contract_Ramp_D\CADD\Bridge\BRI-750_DK01.dgn
8/23/2019 4:32:45 PM

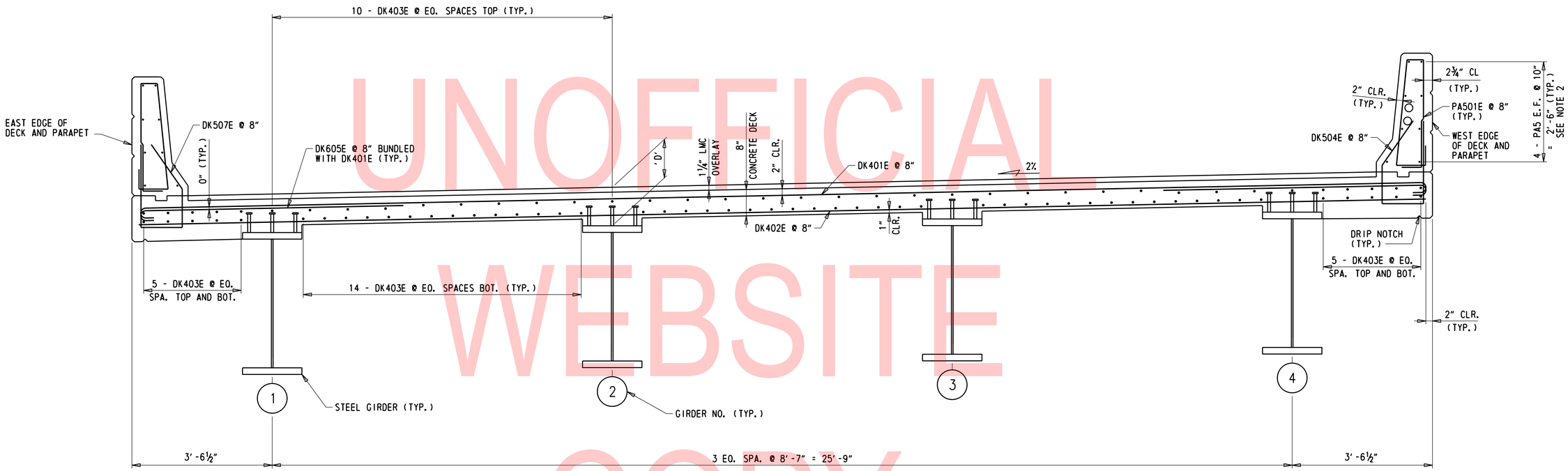

UNOFFICIAL WEBSITE COPY

DECK TYPICAL REINFORCEMENT SECTION

¾" = 1'-0"

NOTES:

1. STAY-IN-PLACE FORMS NOT SHOWN FOR CLARITY. SEE DWG. SD-01 FOR DETAILS.
2. FOR PARAPET LONGITUDINAL BAR NUMBERS AND DECK LONGITUDINAL AND TRANSVERSE REINFORCEMENT, SEE DWG. DK-01.
3. FOR 'D' DIMENSION OVER GIRDER, SEE DWG. TS-01.

ADDENDA / REVISIONS		SCALE AS NOTED	REHABILITATION OF I-95, 2ND STREET ON-RAMP IMPROVEMENTS	CONTRACT T201907402	BRIDGE NO. 1 750 6148	DECK TYPICAL REINFORCEMENT SECTION	DK-02
				COUNTY NEW CASTLE	DESIGNED BY: D. NIZAMOFF		SECTION WRA
					CHECKED BY: W. GESCHREI		SHEET NO. 172

N:\31987-004\Contract_Ramp_D\CADD\Bridge\BR1-750_DK02.dgn
8/23/2019 4:32:46 PM

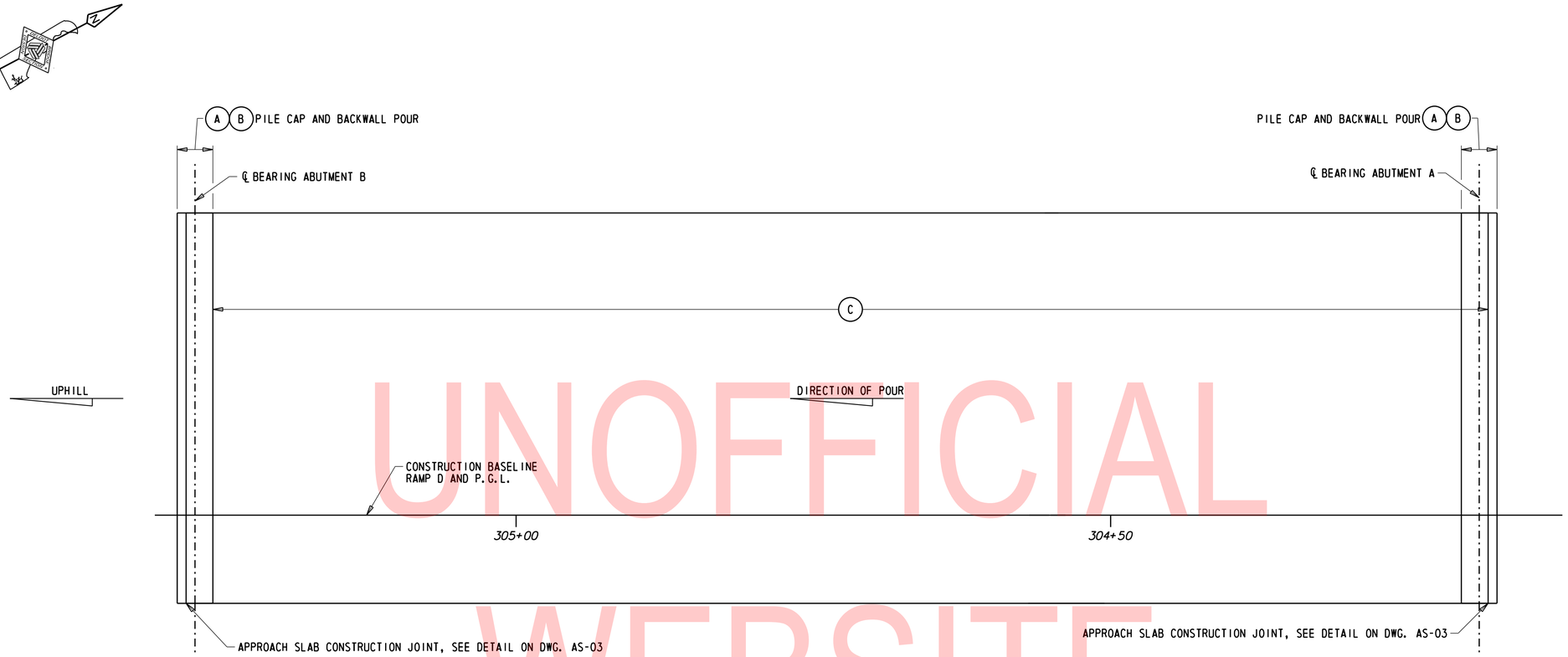

DECK POUR SEQUENCE

1/16" = 1'-0"

UNOFFICIAL WEBSITE COPY

NOTES:

1. THE ABUTMENT PILE CAP (POUR A) AND BACKWALL (POUR B) SHALL BE POURED PRIOR TO THE DECK POUR (POUR C). SEE DETAILS AND NOTE 11 ON DWG. AB-02 FOR MORE INFORMATION.

N:\31987-004\Contract_Ramp_D\CADD\Bridge\BRI-750_DK03.dgn
8/23/2019 4:32:46 PM

ADDENDA / REVISIONS		SCALE AS NOTED	REHABILITATION OF I-95, 2ND STREET ON-RAMP IMPROVEMENTS	CONTRACT T201907402	BRIDGE NO. 1 750 6148	DECK POUR SEQUENCE	DK-03
				COUNTY NEW CASTLE	DESIGNED BY: D. NIZAMOFF		SECTION WRA
					CHECKED BY: W. GESCHREI		SHEET NO. 173

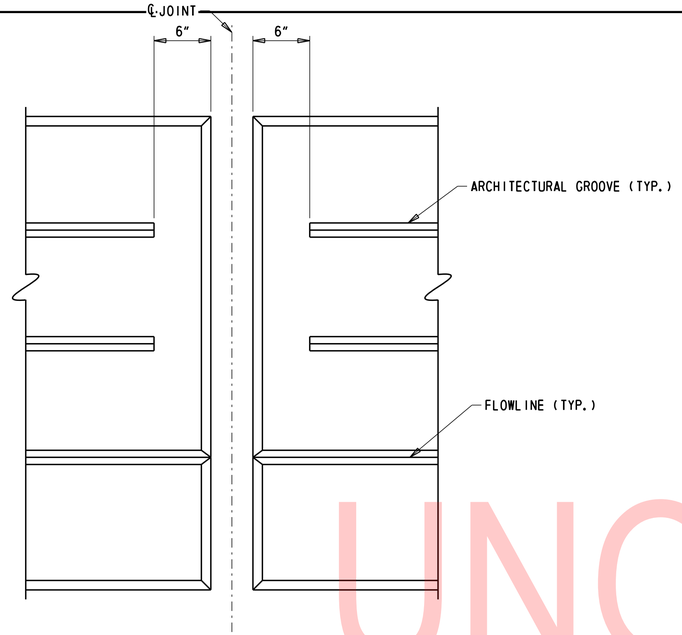

ARCHITECTURAL GROOVE TERMINATION DETAIL

1½" = 1'-0"

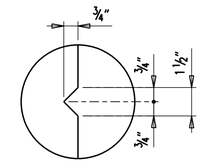

ARCHITECTURAL GROOVE DETAIL

3" = 1'-0"

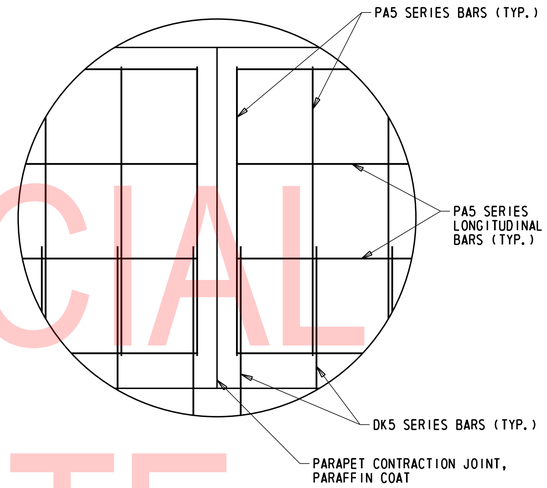

PARAPET CONTRACTION JOINT DETAIL

1½" = 1'-0"

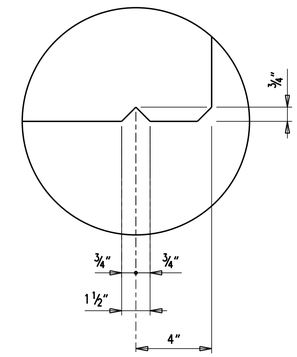

DRIP NOTCH DETAIL

3" = 1'-0"

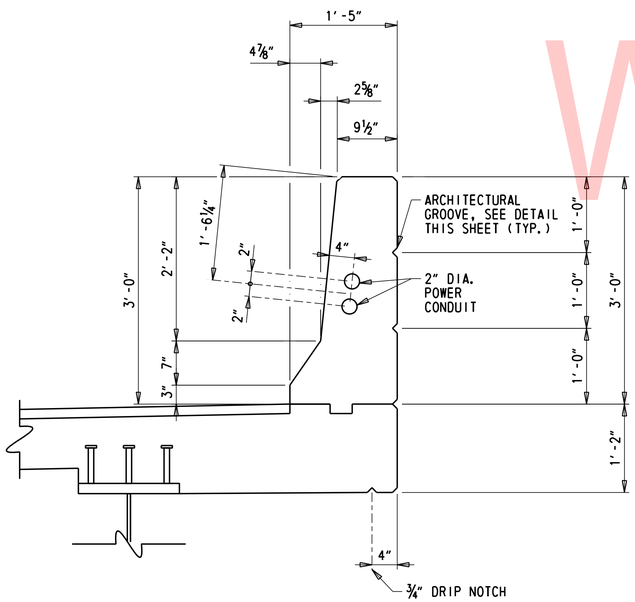

1'-5" WIDE PARAPET DETAIL

1" = 1'-0"

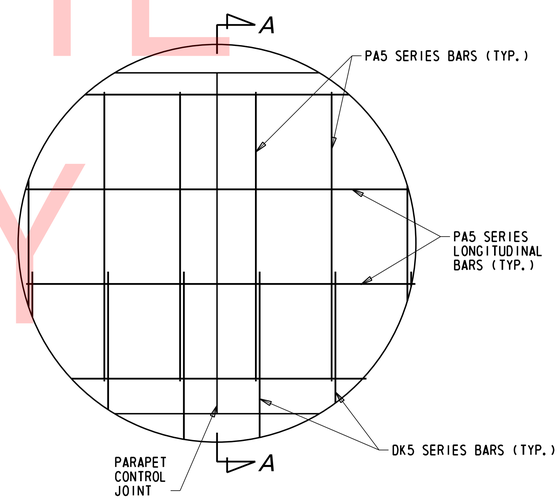

PARAPET CONTROL JOINT DETAIL

1½" = 1'-0"

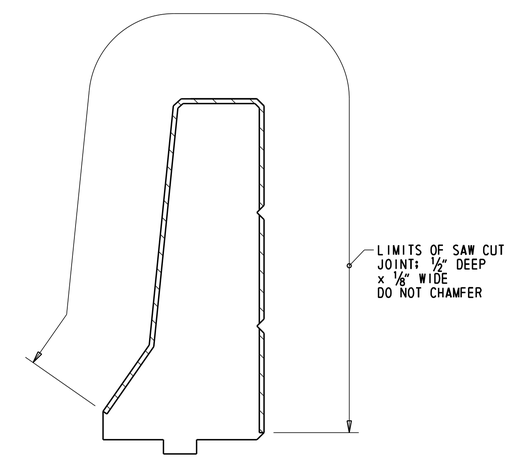

SECTION A-A

1½" = 1'-0"

REINFORCEMENT NOT SHOWN FOR CLARITY.

UNOFFICIAL WEBSITE COPY

ADDENDA / REVISIONS	SCALE AS NOTED	REHABILITATION OF I-95, 2ND STREET ON-RAMP IMPROVEMENTS	CONTRACT T201907402	BRIDGE NO. 1 750 6148	PARAPET DETAILS	PA-01 SECTION WRA
			COUNTY NEW CASTLE	DESIGNED BY: D. NIZAMOFF		SHEET NO. 174
				CHECKED BY: W. GESCHREI		

N:\31987-094\Contract_Ramp_D\CADD\Bridge\BR1-750_PA01.dgn
8/23/2019 4:32:47 PM

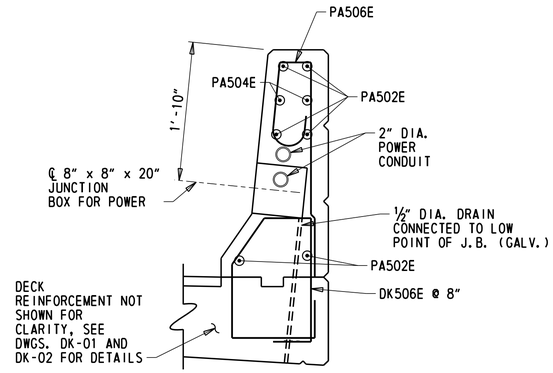

SECTION AT JUNCTION BOX

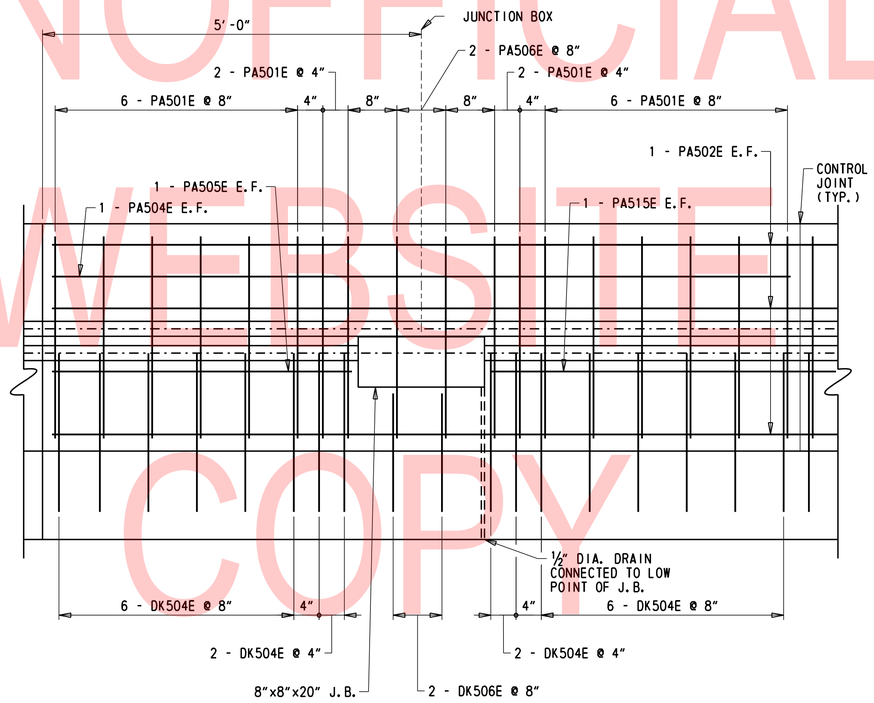

ELEVATION

PARAPET W/ JUNCTION BOX ON BRIDGE

1" = 1'-0"

NOTES:

1. JUNCTION BOXES SHOULD BE PLACED CENTERED BETWEEN JOINTS IN THE PARAPET.
2. FOR ADDITIONAL PARAPET AND REINFORCEMENT DETAILS, SEE DWG. PA-01.

UNOFFICIAL WEBSITE COPY

ADDENDA / REVISIONS		SCALE AS NOTED	REHABILITATION OF I-95, 2ND STREET ON-RAMP IMPROVEMENTS	CONTRACT T201907402	BRIDGE NO. 1 750 6148	PARAPET JUNCITON BOX DETAILS ON BRIDGE	PA-02 SECTION WRA
				COUNTY NEW CASTLE	DESIGNED BY: D. NIZAMOFF		SHEET NO. 175
					CHECKED BY: W. GESCHREI		

N:\31987-004\Contract_Ramp_D\CADD\Bridge\BRI-750_PA02.dgn
8/23/2019 4:32:48 PM

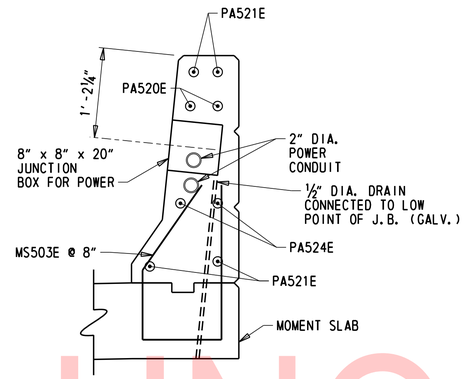

SECTION AT 2" POWER UPPER J.B.

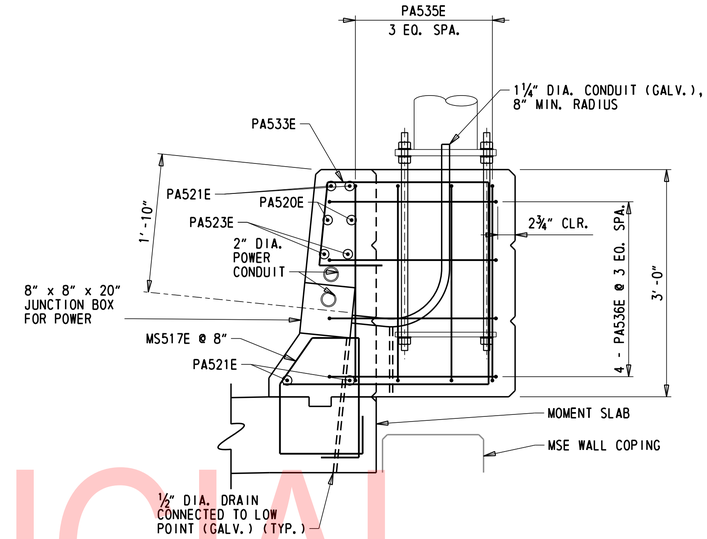

SECTION AT 2" POWER LOWER J.B.

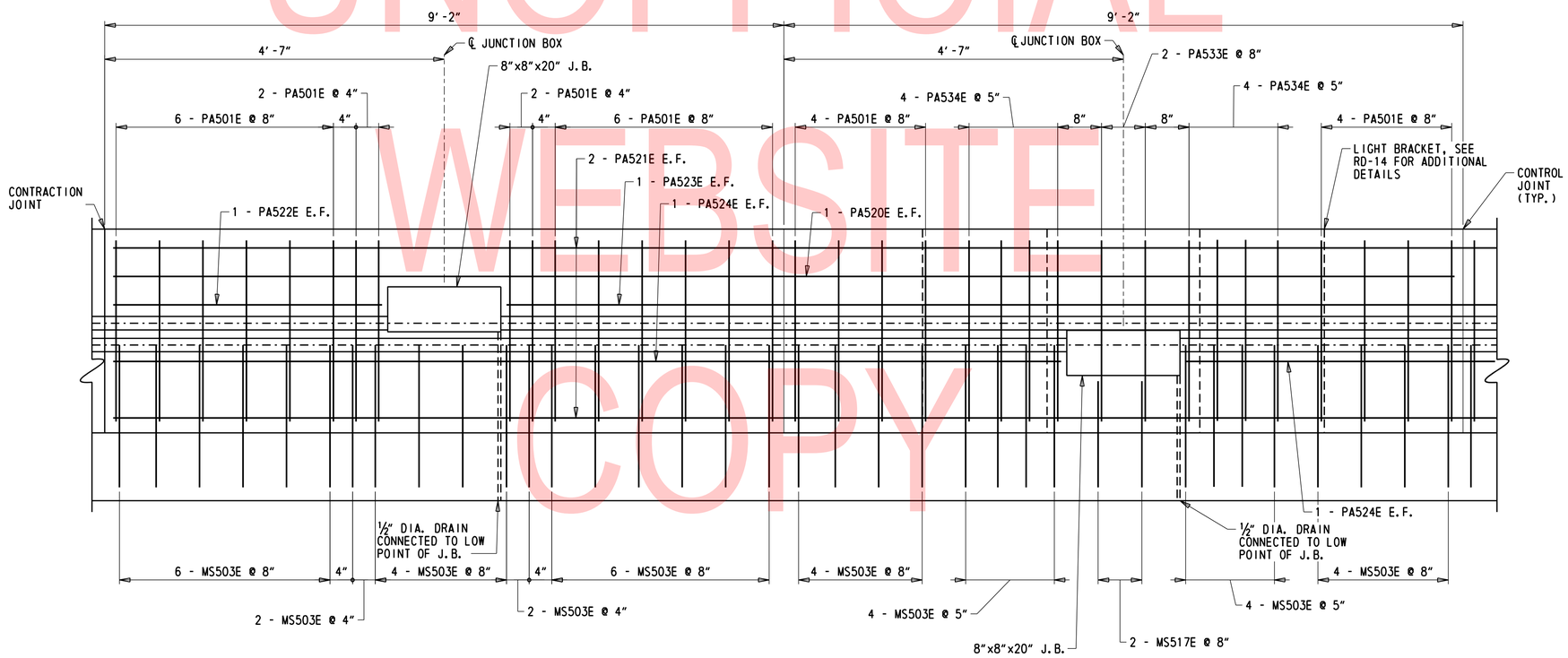

ELEVATION

PARAPET W/ J.B.'S ON MOMENT SLAB STA. 305+48.00 TO 305+78.00

1" = 1'-0"

NOTES:

1. JUNCTION BOXES SHOULD BE PLACED CENTERED BETWEEN JOINTS IN THE PARAPET.
2. FOR ADDITIONAL PARAPET AND REINFORCEMENT DETAILS, SEE DWG. PA-01.
3. FOR ADDITIONAL LIGHT BRACKET AND REINFORCEMENT DETAILS, SEE DWG. RD-14.

PA-03

ADDENDA / REVISIONS	SCALE AS NOTED	REHABILITATION OF I-95, 2ND STREET ON-RAMP IMPROVEMENTS	CONTRACT T201907402	BRIDGE NO. 1 750 6148	PARAPET JUNCITON BOX DETAILS ON MOMENT SLAB STA. 305+48 TO 305+78	SECTION WRA
			COUNTY NEW CASTLE	DESIGNED BY: D. NIZAMOFF		SHEET NO. 176
				CHECKED BY: W. GESCHREI		

N:\31987-004\Contract_Ramp_D\CADD\Bridge\BR1-750_PA03.dgn
8/23/2019 4:32:48 PM

UNOFFICIAL WEBSITE COPY

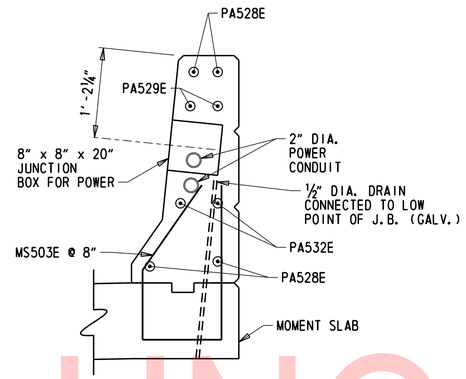

SECTION AT 2" POWER UPPER J.B.

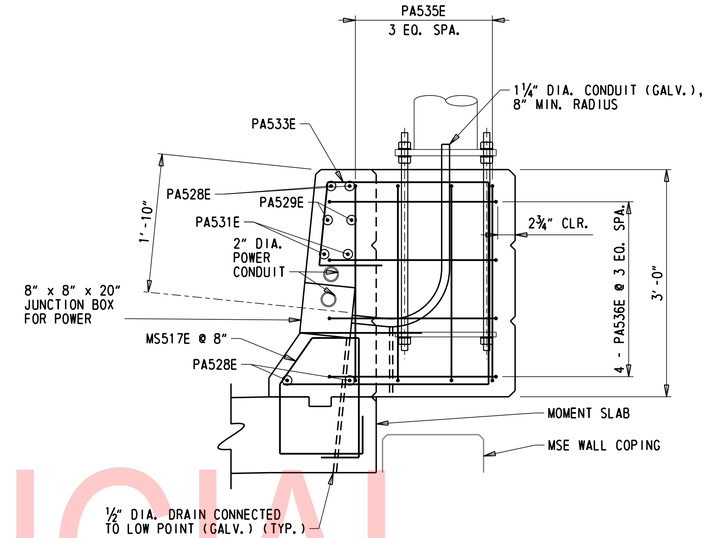

SECTION AT 2" POWER LOWER J.B.

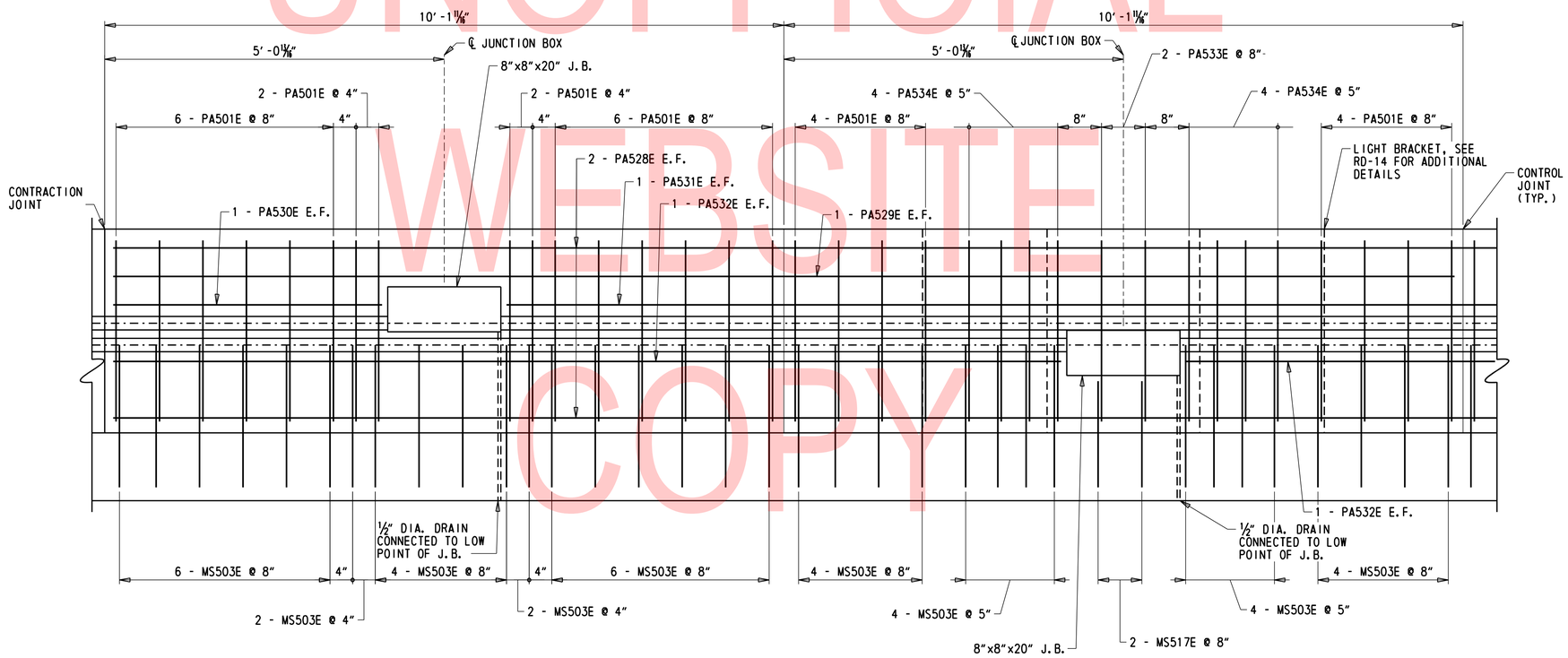

ELEVATION

PARAPET W/ J.B.'S ON MOMENT SLAB STA. 307+84.70 TO 308+14.11

1" = 1'-0"

NOTES:

1. JUNCTION BOXES SHOULD BE PLACED CENTERED BETWEEN JOINTS IN THE PARAPET.
2. FOR ADDITIONAL PARAPET AND REINFORCEMENT DETAILS, SEE DWG. PA-01.
3. FOR ADDITIONAL LIGHT BRACKET AND REINFORCEMENT DETAILS, SEE DWG. RD-14.

UNOFFICIAL WEBSITE COPY

N:\31987-004\Contract_Ramp_D\CADD\Bridge\BR1-750_PA04.dgn
8/23/2019 4:32:49 PM

ADDENDA / REVISIONS	SCALE AS NOTED	REHABILITATION OF I-95, 2ND STREET ON-RAMP IMPROVEMENTS	CONTRACT T201907402	BRIDGE NO. 1 750 6148	PARAPET JUNCITON BOX DETAILS ON MOMENT SLAB STA. 307+84 TO 308+14	PA-04
			COUNTY NEW CASTLE	DESIGNED BY: D. NIZAMOFF		SECTION WRA
				CHECKED BY: W. GESCHREI		SHEET NO. 177

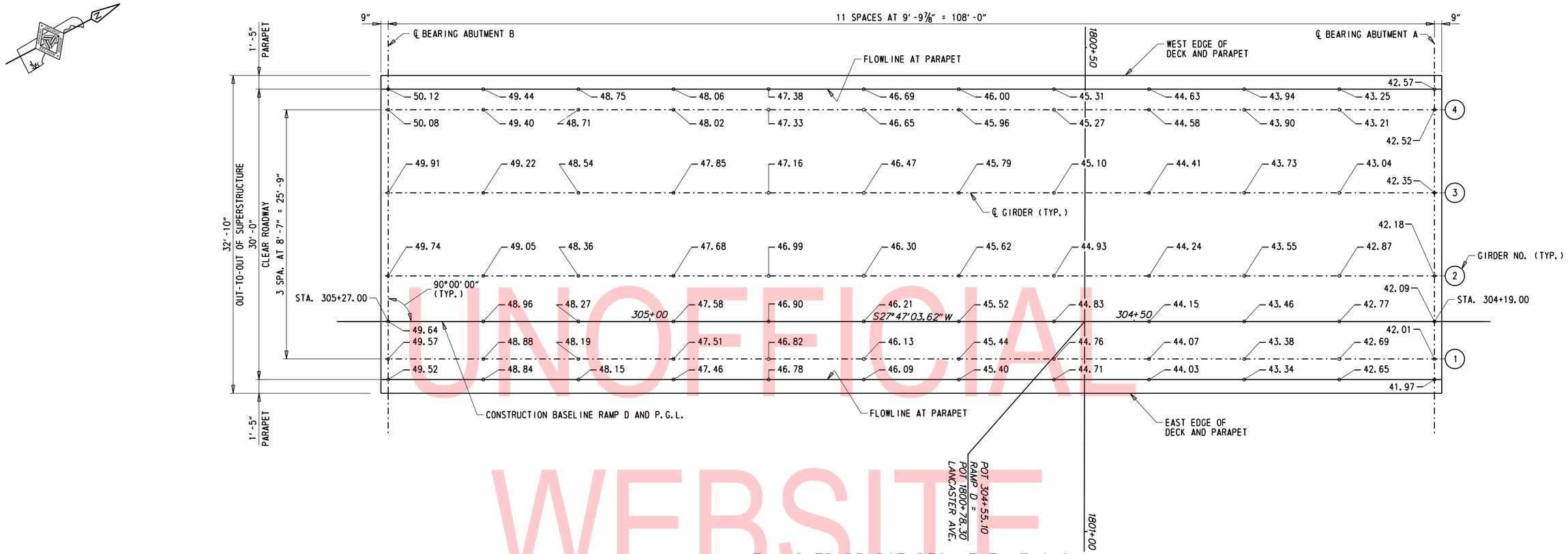

FINISHED BRIDGE DECK ELEVATIONS

3/16" = 1'-0"

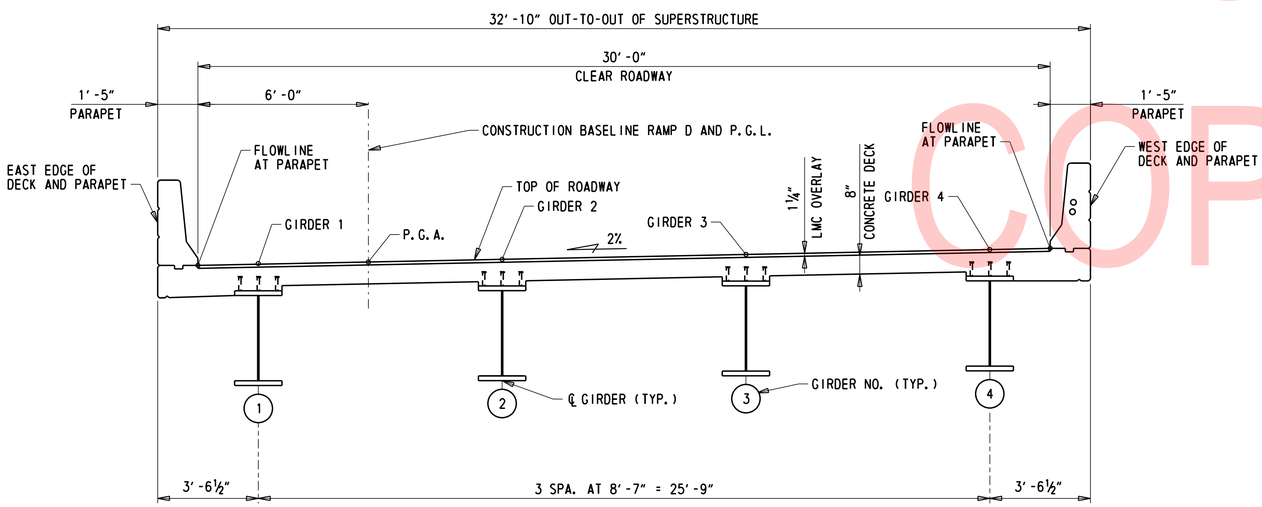

LOCATION OF FINISHED BRIDGE DECK ELEVATIONS

3/8" = 1'-0"

NOTES:

1. FINISHED BRIDGE DECK ELEVATIONS SHOWN ARE TOP OF ROADWAY (TOP OF LMC OVERLAY).
2. FOR VERTICAL CURVE DATA, SEE DWG. PE-01.

UNOFFICIAL WEBSITE COPY

N:\31987-004\Contract_Ramp_D\CADD\Bridge\BR1-750_FD01.dgn
8/23/2019 4:32:50 PM

ADDENDA / REVISIONS	SCALE AS NOTED	REHABILITATION OF I-95, 2ND STREET ON-RAMP IMPROVEMENTS	CONTRACT T201907402	BRIDGE NO. 1 750 6148	FINISHED BRIDGE DECK ELEVATIONS	FD-01
			COUNTY NEW CASTLE	DESIGNED BY: D. NIZAMOFF		SECTION WRA
				CHECKED BY: W. GESCHREI		SHEET NO. 178

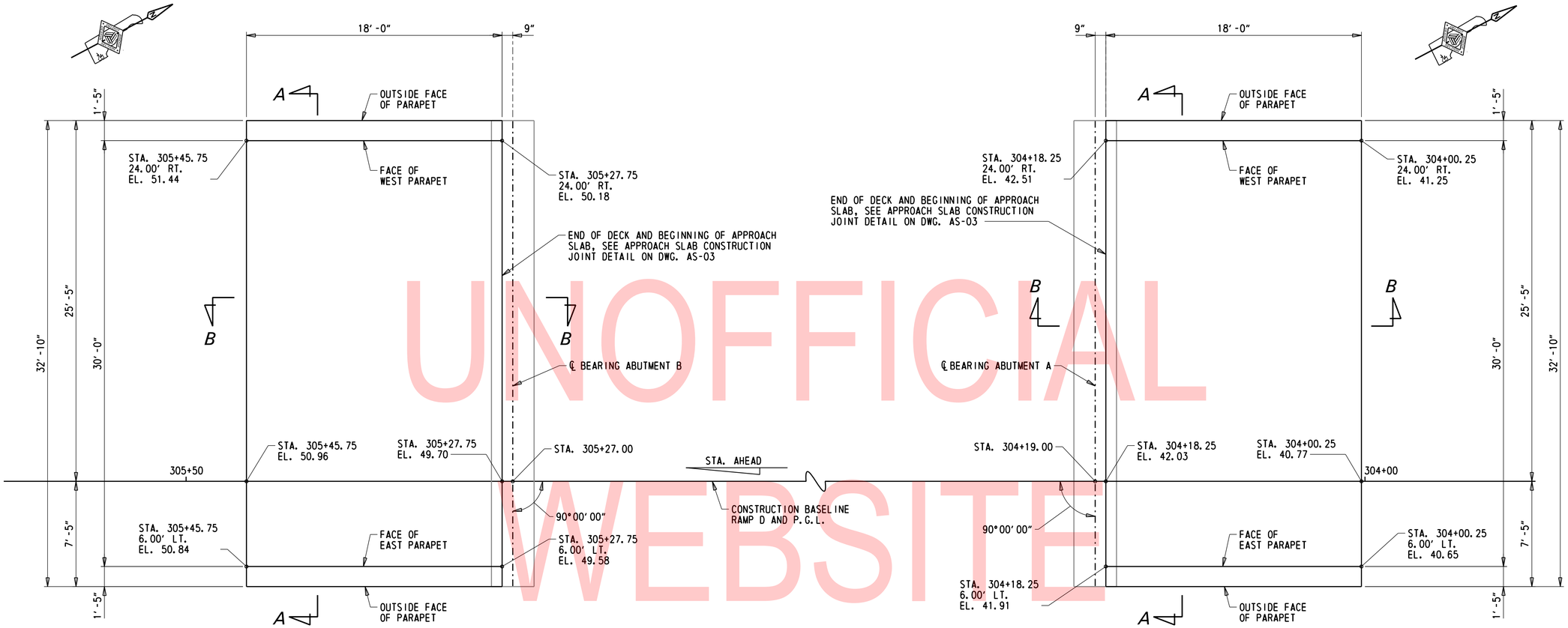

APPROACH SLAB B PLAN

¼″ = 1′-0″

APPROACH SLAB A PLAN

¼″ = 1′-0″

UNOFFICIAL WEBSITE COPY

NOTES:

1. FOR SECTION A-A, SEE DWG. AS-02.

ADDENDA / REVISIONS	SCALE AS NOTED	REHABILITATION OF I-95, 2ND STREET ON-RAMP IMPROVEMENTS	CONTRACT T201907402	BRIDGE NO. 1 750 6148	APPROACH SLAB PLAN	AS-01
			COUNTY NEW CASTLE	DESIGNED BY: D. NIZAMOFF		SECTION WRA
				CHECKED BY: W. GESCHREI		SHEET NO. 179

N:\31987-004\Contract_Ramp_D\CADD\Bridge\BR1-750_AS01.dgn
8/23/2019 4:32:51 PM

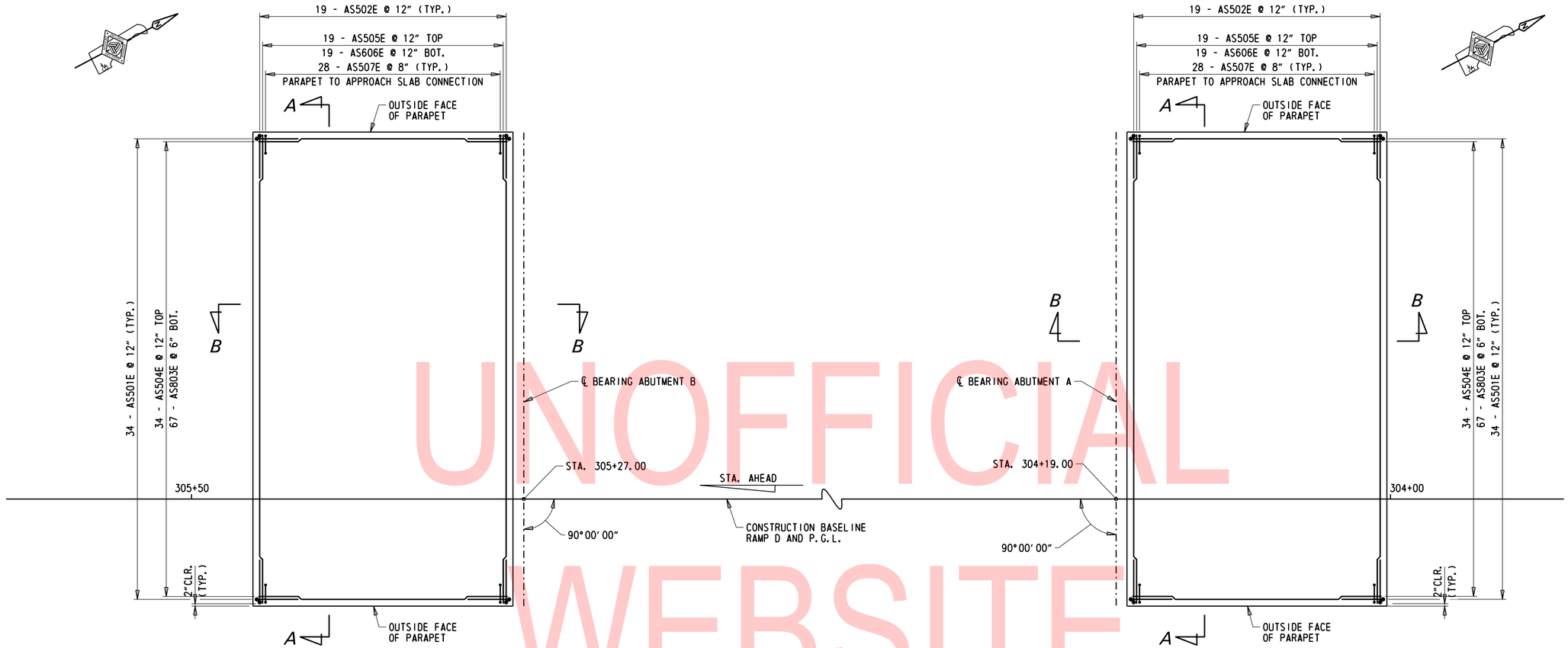

APPROACH SLAB B REINFORCEMENT PLAN

¼" = 1'-0"

APPROACH SLAB A REINFORCEMENT PLAN

¼" = 1'-0"

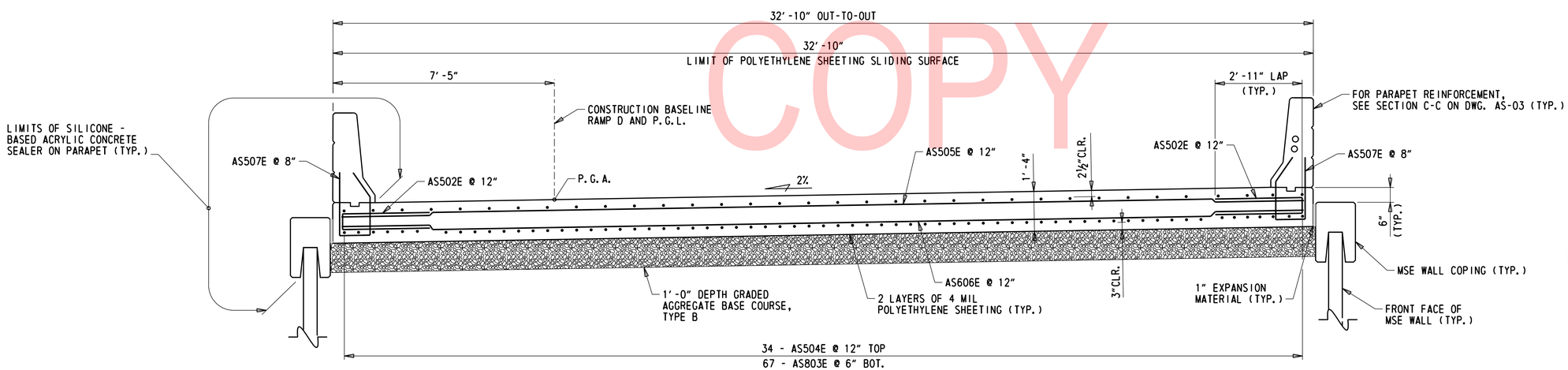

SECTION A-A

½" = 1'-0"

NOTES:

1. FOR SECTION B-B, SEE DWG. AS-03.

UNOFFICIAL WEBSITE COPY

ADDENDA / REVISIONS		SCALE AS NOTED	REHABILITATION OF I-95, 2ND STREET ON-RAMP IMPROVEMENTS	CONTRACT T201907402	BRIDGE NO. 1 750 6148	APPROACH SLAB REINFORCEMENT	AS-02
				COUNTY NEW CASTLE	DESIGNED BY: D. NIZAMOFF		SECTION WRA
					CHECKED BY: W. GESCHREI		SHEET NO. 180

N:\31987-004\Contract_Ramp_D\CADD\Bridge\BR1-750_AS02.dgn
8/23/2019 4:32:51 PM

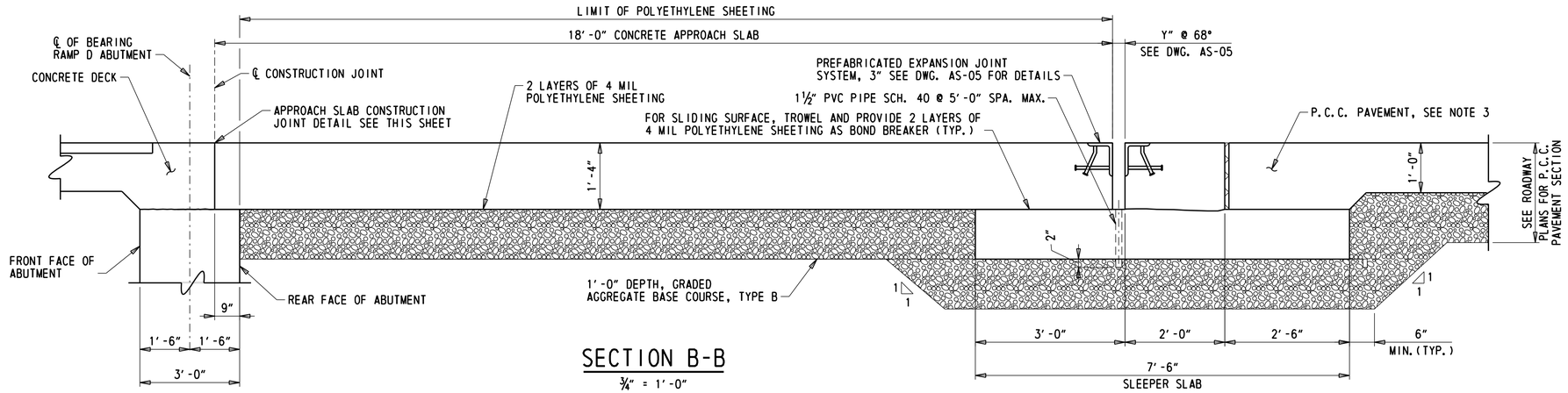

SECTION B-B

¾" = 1'-0"

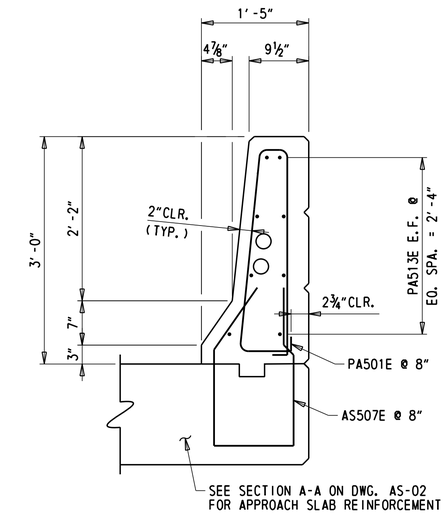

SECTION C-C

1" = 1'-0"

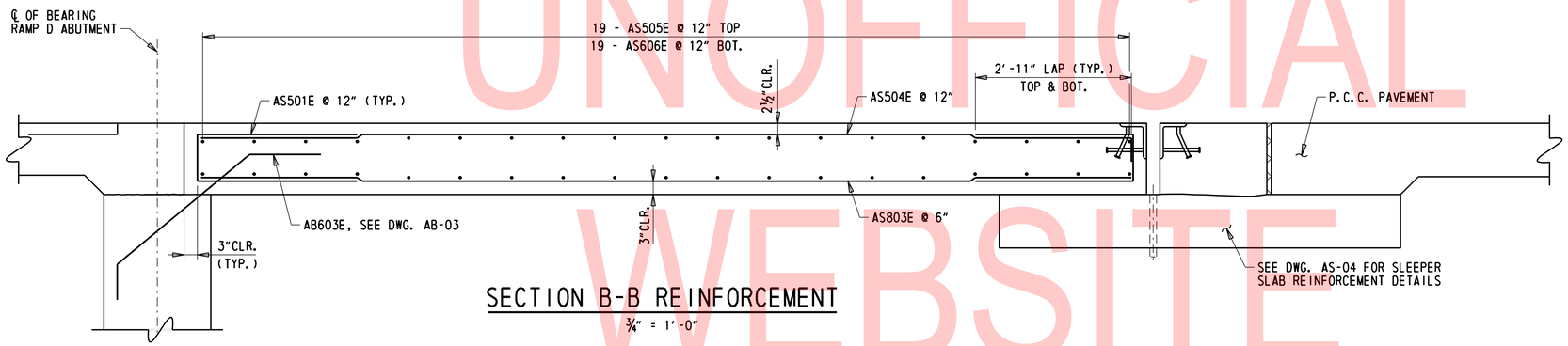

SECTION B-B REINFORCEMENT

¾" = 1'-0"

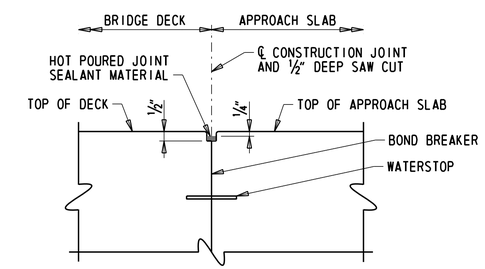

APPROACH SLAB CONSTRUCTION JOINT

NOT TO SCALE

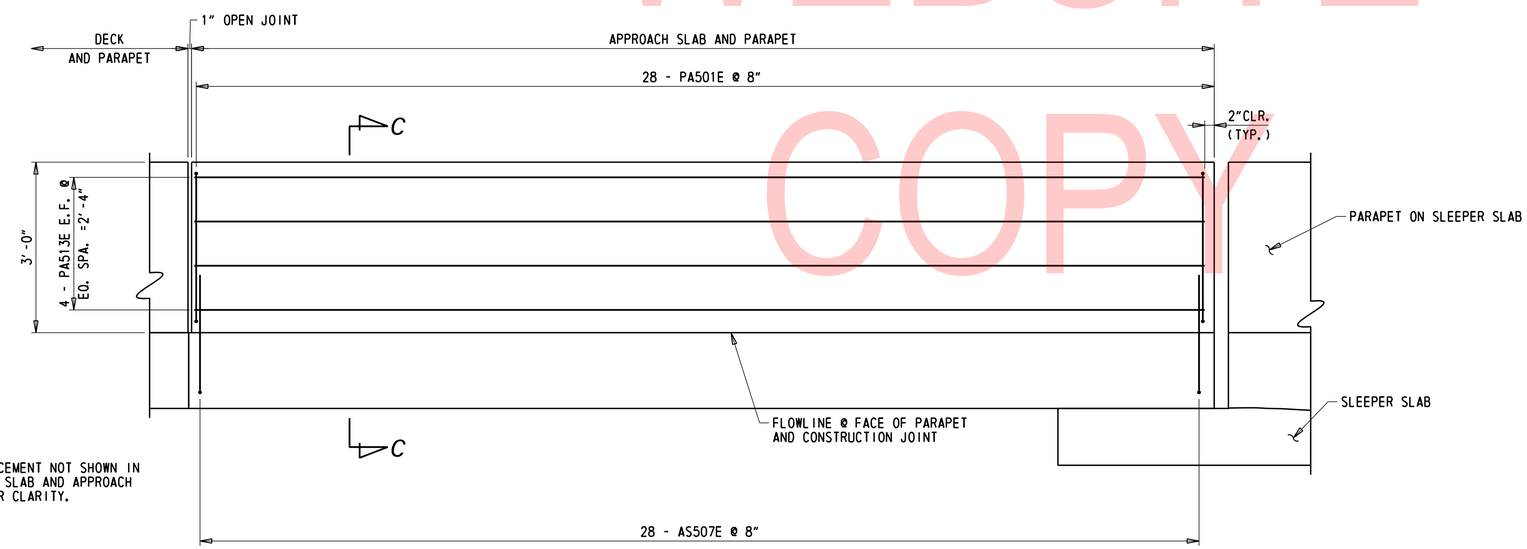

NOTE:

REINFORCEMENT NOT SHOWN IN SLEEPER SLAB AND APPROACH SLAB FOR CLARITY.

APPROACH SLAB PARAPET REINFORCEMENT ELEVATION

¾" = 1'-0"

NOTES:

1. FOR ADDITIONAL APPROACH SLAB REINFORCEMENT DETAILS SEE DWG. AS-02.
2. PAYMENT FOR POLYETHYLENE SHEETING, BOND BREAKER, WATERSTOP, HOT POURED JOINT SEALANT SHALL BE INCIDENTAL TO ITEM 610018 - PORTLAND CEMENT CONCRETE, APPROACH SLAB, CLASS D.
3. FOR ADDITIONAL ROADWAY PAVEMENT DETAILS, SEE DELDOT STANDARD P-1. PAYMENT FOR ROADWAY JOINTS SHALL BE INCIDENTAL TO ROADWAY PAVEMENT ITEM.

UNOFFICIAL WEBSITE COPY

N:\31987-004\Contract_Ramp_D\CADD\Bridge\BR1-750_AS03.dgn
8/23/2019 4:32:52 PM

ADDENDA / REVISIONS	SCALE AS NOTED	REHABILITATION OF I-95, 2ND STREET ON-RAMP IMPROVEMENTS	CONTRACT T201907402	BRIDGE NO. 1 750 6148	APPROACH SLAB DETAILS	AS-03
			COUNTY NEW CASTLE	DESIGNED BY: D. NIZAMOFF		SECTION WRA
				CHECKED BY: W. GESCHREI		SHEET NO. 181

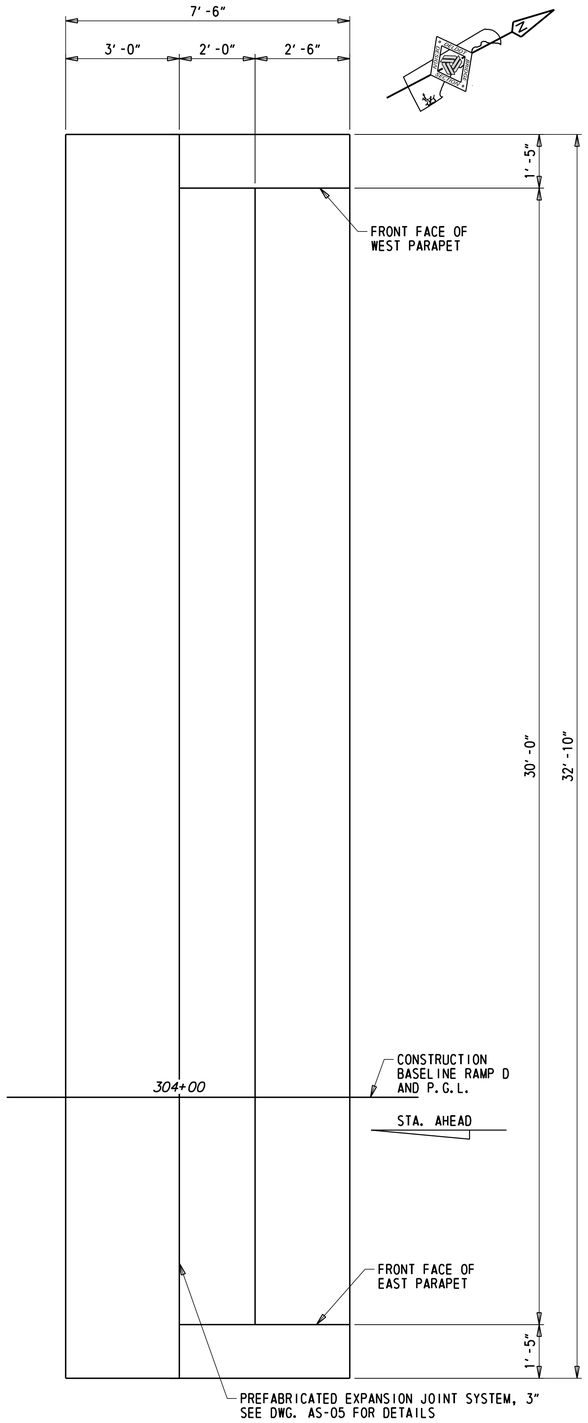

SLEEPER SLAB PLAN

½" = 1'-0"

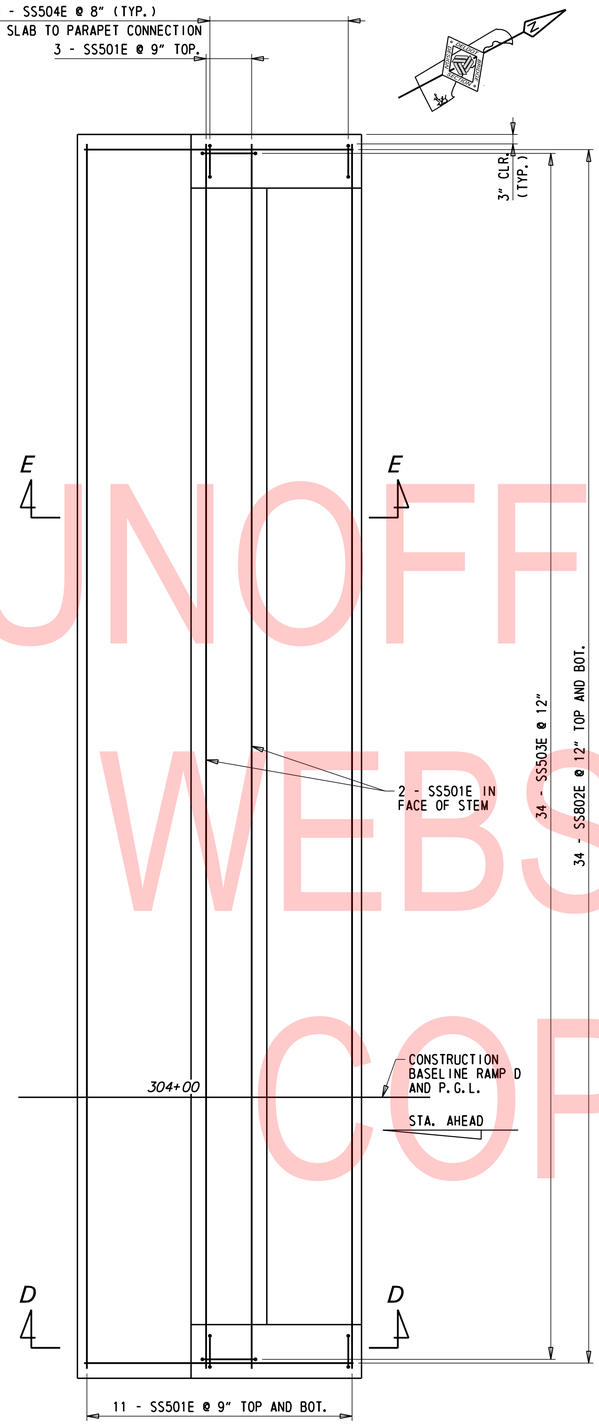

SLEEPER SLAB REINFORCEMENT PLAN

½" = 1'-0"

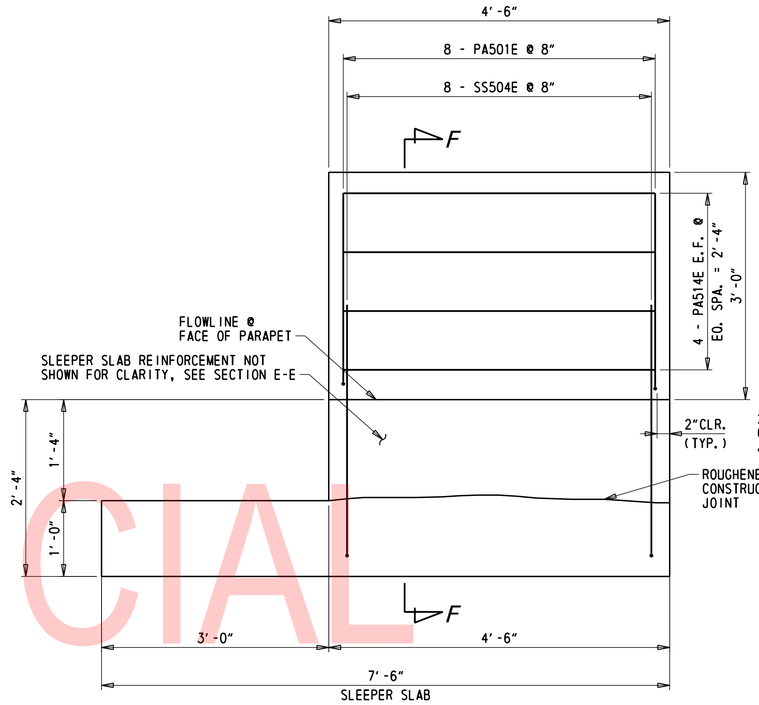

SECTION D-D

1" = 1'-0"

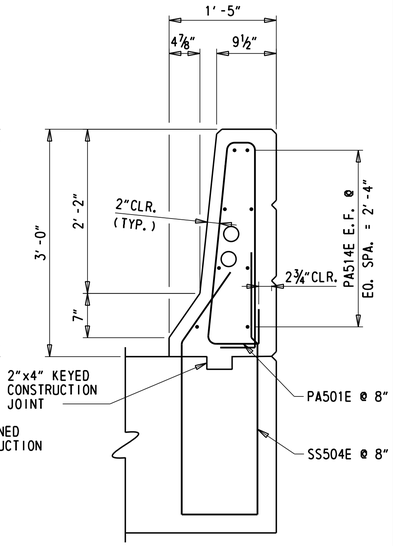

SECTION F-F

1" = 1'-0"

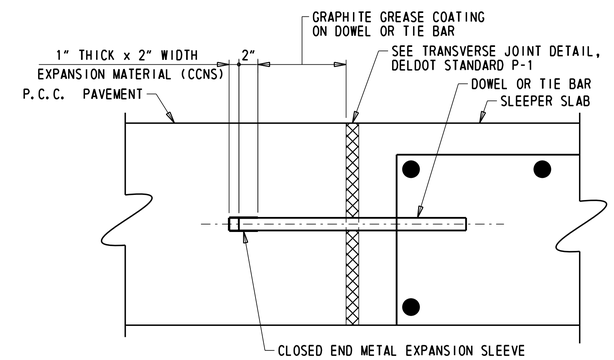

DETAIL A

N.T.S

CCNS = CLOSED CELL NEOPRENE SPONGE

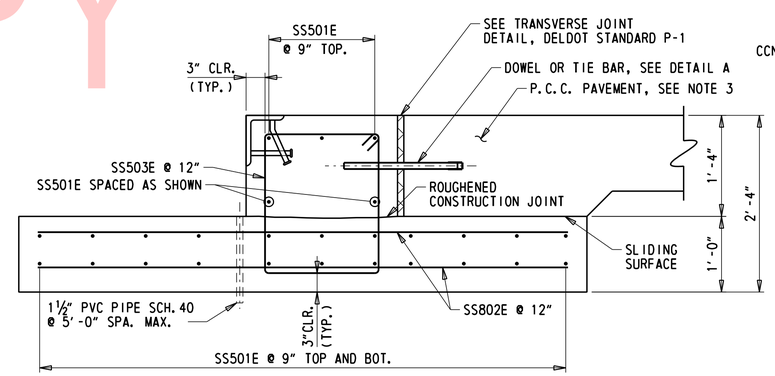

SECTION E-E

1" = 1'-0"

NOTES:

1. SLEEPER SLAB A SHOWN, SLEEPER SLAB B OPPOSITE HAND.
2. FOR APPROACH SLAB PLAN AND DETAILS, SEE DWGS. AS-01 THROUGH AS-03.
3. FOR ADDITIONAL ROADWAY PAVEMENT DETAILS, SEE DELDOT STANDARD P-1. PAYMENT FOR ROADWAY JOINTS SHALL BE INCIDENTAL TO ROADWAY PAYMENT ITEM.
4. PAYMENT FOR SLEEPER SLAB CONCRETE WILL BE MADE UNDER ITEM 610016 - PORTLAND CEMENT CONCRETE MASONRY, CLASS D.

UNOFFICIAL WEBSITE COPY

N:\31987-004\Contract_Ramp_D\CADD\Bridge\BR1-750_AS04.dgn
8/23/2019 4:32:53 PM

ADDENDA / REVISIONS	SCALE AS NOTED	REHABILITATION OF I-95, 2ND STREET ON-RAMP IMPROVEMENTS	CONTRACT T201907402	BRIDGE NO. 1 750 6148	SLEEPER SLAB PLAN AND DETAILS	AS-04
			COUNTY NEW CASTLE	DESIGNED BY: D. NIZAMOFF		SECTION WRA
				CHECKED BY: W. GESCHREI		SHEET NO. 182

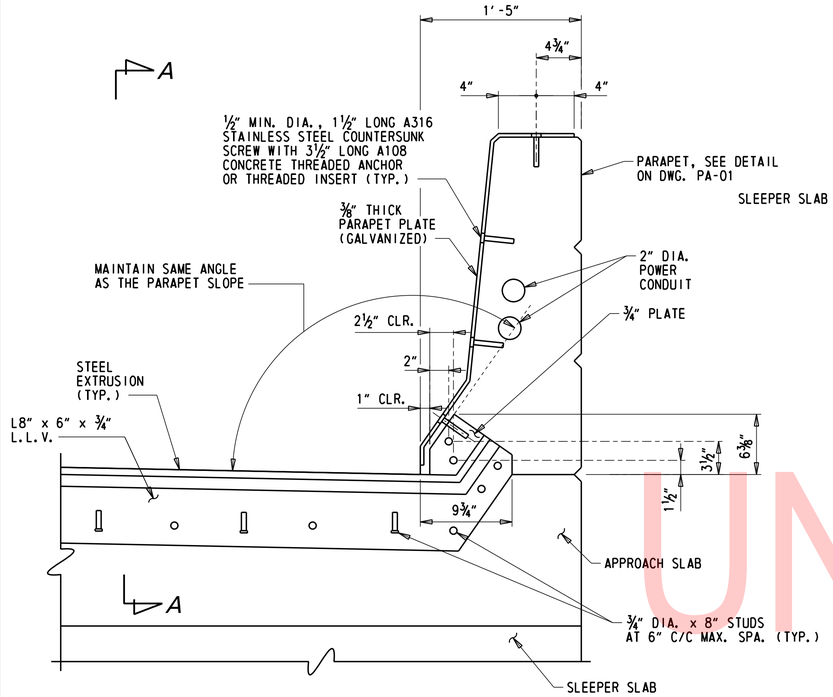

TYPICAL SECTION AT JOINT

1½" = 1'-0"

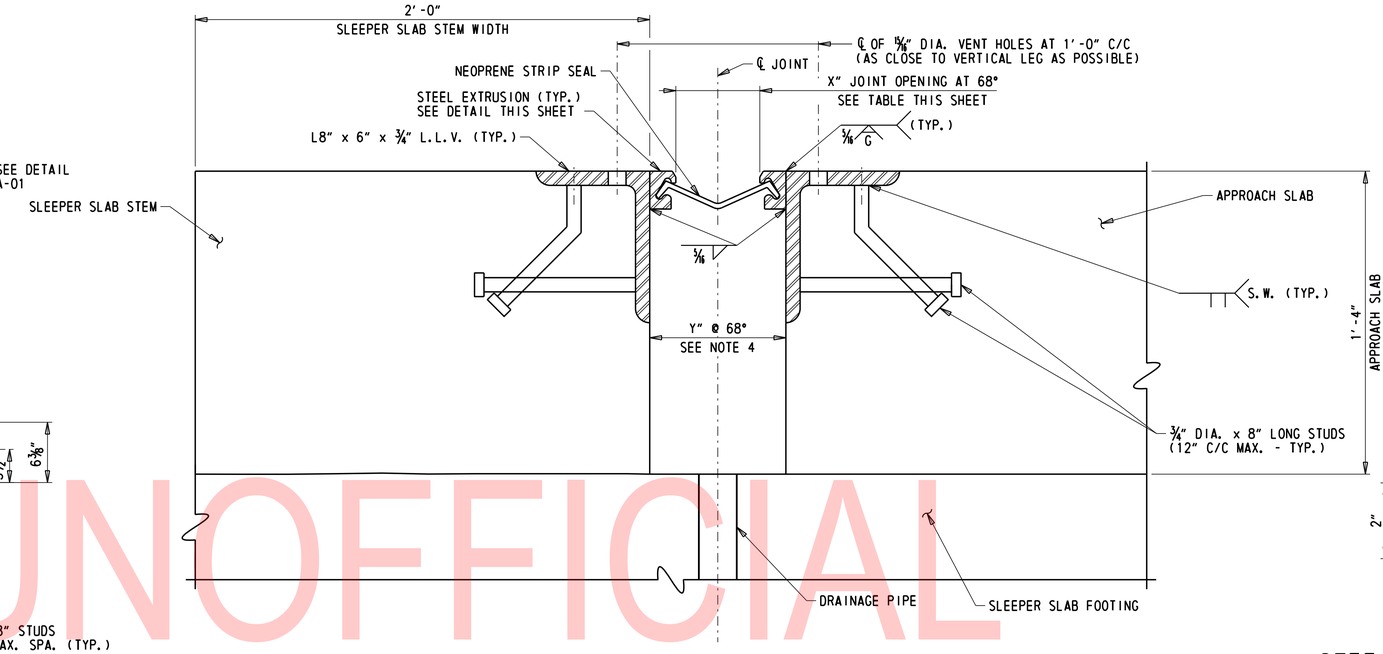

APPROACH SLAB JOINT ASSEMBLY DETAIL

3" = 1'-0"

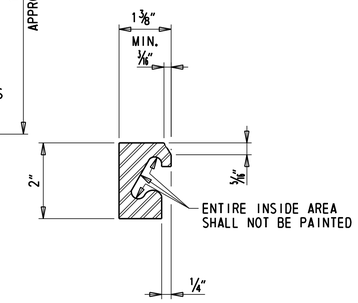

STEEL EXTRUSION DETAIL

6" = 1'-0"

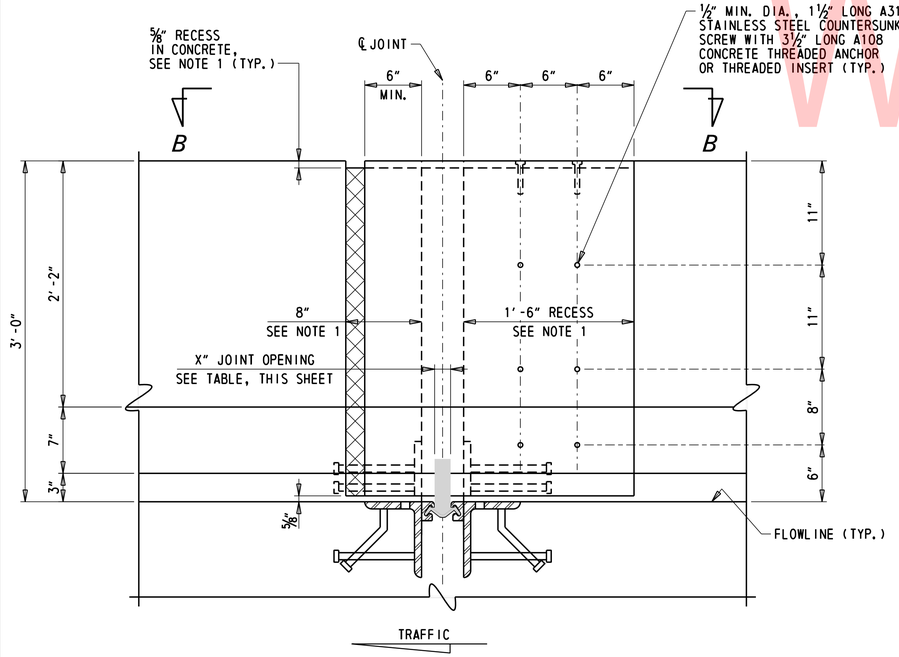

VIEW A-A

1½" = 1'-0"

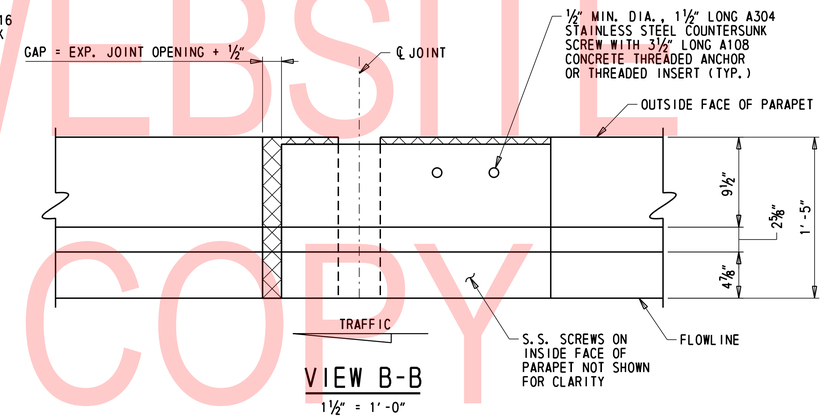

VIEW B-B

1½" = 1'-0"

PARAPET JOINT PLATE NOTES:

1. FORM CONCRETE RECESS AREA IN PARAPET AND GRIND TO PROVIDE SMOOTH SURFACE. APPLY ONE COAT OF ASPHALT CEMENT TO FREE SIDE OF JOINT IN ACCORDANCE WITH SECTION 1012 OF THE STANDARD SPECIFICATIONS TO ALLOW BENT SLIDING PLATE TO MOVE FREELY WITHOUT FRICTION. PAYMENT WILL BE INCIDENTAL TO ITEM 624000 - PREFABRICATED EXPANSION JOINT SYSTEM, 3".
2. PLACE PARAPET CONCRETE WITH STEEL BENT PLATES, INSERTS, AND BOLTS IN PLACE TO ENSURE PROPER ALIGNMENT OF INSERTS AND HOLES IN THE STEEL PLATE. REMOVE PLATES TO INSTALL SEAL. APPLY APPROVED BONDBREAKER TO SLIDING PLATES PRIOR TO PLACEMENT OF CONCRETE.
3. USE TYPE 316 STAINLESS STEEL COUNTERSUNK FLATHEAD SCREWS WITH ASTM A108 CONCRETE THREADED ANCHOR OR THREADED INSERT. HEAD OF SCREWS SHALL BE FLUSH WITH FACE OF STEEL PLATE.
4. THE CONTRACTOR SHALL SUBMIT WORKING DRAWINGS OF TRAFFIC BARRIER PLATES FOR APPROVAL.
5. ⅜" PARAPET PLATE SHALL BE UNPAINTED GALVANIZED STEEL. PAYMENT FOR PARAPET JOINT PLATES SHALL BE INCIDENTAL TO ITEM 624000 - PREFABRICATED EXPANSION JOINT SYSTEM, 3".

STRIP SEAL EXPANSION JOINT NOTES:

1. STEEL FOR DECK JOINTS AND STEEL EXTRUSIONS SHALL BE AASHTO M 270, GR. 36 (ASTM A36) AT MINIMUM.
2. NEOPRENE EXTRUSION TO MEET ASTM D2628 MODIFIED, (RECOVERY TEST EXCLUDED).
3. THE EXPANSION JOINT SHALL BE CAPABLE OF SEALING THE APPROACH SLAB TO SLEEPER SLAB JOINT TO PREVENT MOISTURE AND OTHER CONTAMINANTS FROM DESCENDING THROUGH THE JOINT.
4. THE CONTRACTOR SHALL ADJUST THE OPEN JOINT (Y) AS REQUIRED BY THE WIDTH OF THE STEEL EXTRUSION USED SO AS TO PROVIDE A X" JOINT OPENING AT 68°F.
5. THE STRIP SEAL SHALL BE INSTALLED IN ONE PIECE ACROSS THE APPROACH SLAB WIDTH. SPLICING OF THE STRIP SEAL IS NOT PERMITTED.
6. THE EXPANSION JOINT SYSTEM IS PAID FOR UNDER ITEM 624000 - PREFABRICATED EXPANSION JOINT SYSTEM, 3".
7. STEEL EXTRUSIONS SHALL BE HOT DIPPED GALVANIZED. ENTIRE JOINT ASSEMBLY AND EXTRUSION SHALL BE PAINTED AFTER FABRICATION USING URETHANE SYSTEM IN CONFORMANCE WITH SECTION 616 AND ASTM D6386. PAYMENT FOR GALVANIZING AND PAINTING WILL BE INCIDENTAL TO ITEM 624000 - PREFABRICATED EXPANSION JOINT SYSTEM, 3". PAINT COLOR SHALL MATCH THE EXISTING BEAMS/GIRDERS.
8. LUBRICANT - ADHESIVE FOR USE IN INSTALLING AND BONDING NEOPRENE SEAL ELEMENTS TO STEEL JOINT COMPONENTS SHALL BE A ONE QUART MOISTURE - CURING POLYURETHANE AND HYDROCARBON SOLVENT MIXTURE HAVING THE FOLLOWING PHYSICAL PROPERTIES:

AVERAGE WEIGHT, POUNDS PER GALLON	8±10%
SOLIDS CONTENT	65%
ADHESIVE SHALL REMAIN LIQUID FROM	5°F TO 120°F
FILM STRENGTH, AS PER ASTM D-412	2,000 PSI
ELONGATION	250%

9. STEEL EXTRUSIONS AND JOINT ANGLES SHALL BE CONTINUOUS ACROSS THE FULL WIDTH OF THE ROADWAY. NO SPLICING WILL BE PERMITTED.

APPROACH SLAB JOINT OPENINGS, X

TEMPERATURE °F	20°	30°	40°	50°	60°	68°	70°	80°	90°	100°
ABUTMENTS A & B	2 1/16"	2"	1 7/8"	1 11/16"	1 3/4"	1 11/16" ±	1 11/16" ±	1 5/8"	1 1/2"	1 1/16"

NOTES:

1. FOR APPROACH SLAB PLAN AND DETAILS, SEE DWGS. AS-01 THROUGH AS-03.
2. FOR SLEEPER SLAB PLAN AND SECTIONS, SEE DWG. AS-04.
3. APPROACH SLAB AND SLEEPER SLAB REINFORCEMENT NOT SHOWN FOR CLARITY. SEE DWGS. AS-01 THROUGH AS-04 FOR MORE INFORMATION.

UNOFFICIAL WEBSITE COPY

N:\31987-004\Contract_Ramp_D\CADD\Bridge\BR1-750_AS05.dgn
8/23/2019 4:32:54 PM

ADDENDA / REVISIONS	SCALE AS NOTED	REHABILITATION OF I-95, 2ND STREET ON-RAMP IMPROVEMENTS	CONTRACT T201907402	BRIDGE NO. 1 750 6148	APPROACH SLAB JOINT DETAILS	AS-05
			COUNTY NEW CASTLE	DESIGNED BY: D. NIZAMOFF		SECTION WRA
				CHECKED BY: W. GESCHREI		SHEET NO. 183

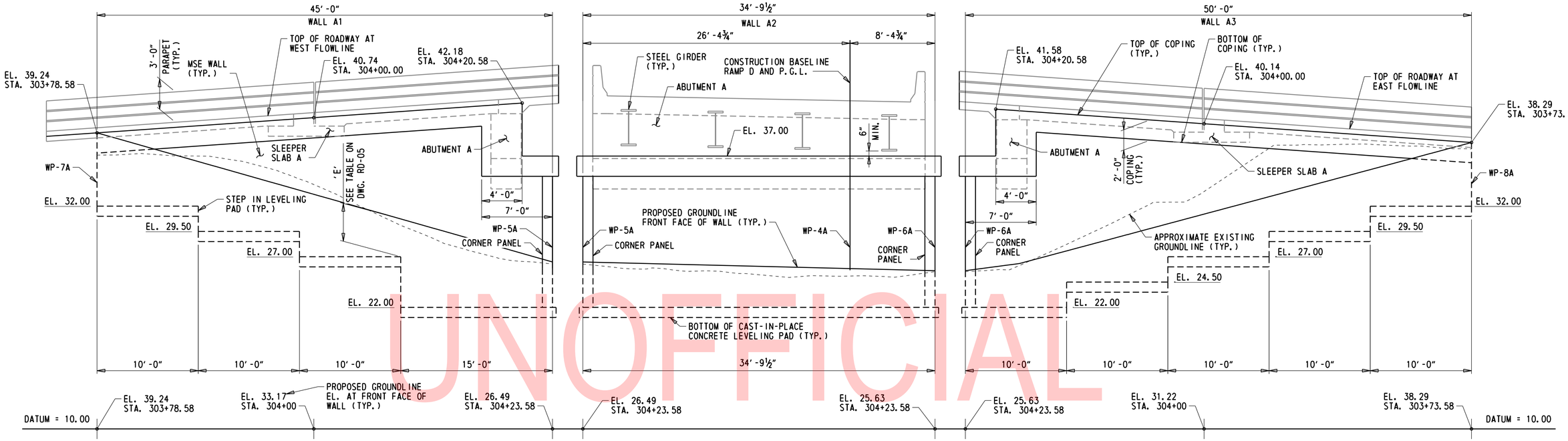

DEVELOPED ELEVATION - WALL A

1" = 5'-0"

UNOFFICIAL WEBSITE COPY

MECHANICALLY STABILIZED EARTH (MSE) WALL NOTES:

1. DESIGN:
THE INTERNAL STABILITY OF THE MSE WALL SHALL BE DESIGNED BY THE PROPRIETARY WALL MANUFACTURER USING THE SOIL PROPERTIES PROVIDED AT EACH MSE WALL LOCATION. THE INTERNAL STABILITY CALCULATIONS SHALL BE SIGNED AND SEALED BY A PROFESSIONAL ENGINEER LICENSED IN THE STATE OF DELAWARE AS INDICATED IN THE PROJECT SPECIFICATIONS. DESIGN SHALL CONFORM TO STANDARD SPECIFICATIONS AND SPECIAL PROVISIONS. ALL MSE WALL PANEL TYPES AND RELATED ITEMS SHALL BE DETAILED ON SHOP DRAWINGS AND SUBMITTED TO THE ENGINEER FOR REVIEW AND APPROVAL.

2. CONCRETE:
ALL CONCRETE PROPERTIES SHALL BE IN ACCORDANCE WITH THE DELAWARE DEPARTMENT OF TRANSPORTATION STANDARD SPECIFICATIONS.

ALL EXPOSED EDGES SHALL BE CHAMFERED ¾" UNLESS NOTED OTHERWISE.

3. ARCHITECTURAL FINISH:
NONE. THE FRONT FACE OF THE MSE WALL PANELS SHALL HAVE A PLAIN FINISH.

4. SERVICE LIFE:
ALL MSE WALL COMPONENTS SHALL BE DESIGNED FOR A MINIMUM SERVICE LIFE OF 100 YEARS.

5. REINFORCING STRIPS:
MSE REINFORCING STRIP LENGTHS SHALL NOT BE LESS THAN MINIMUM LENGTHS LISTED IN MSE WALL DATA TABLE, DWG. RD-05. REINFORCING STRIPS SHALL BE LOCATED TO CLEAR ABUTMENT PILES WITH 2" MINIMUM CLEARANCE AND A MAXIMUM 15 DEGREE SKEW.

6. BEARING RESISTANCE:
FACTORED MSE LOADS CALCULATED AT THE BOTTOM OF THE MSE WALL SHALL NOT EXCEED MAXIMUM FACTORED BEARING RESISTANCES LISTED IN MSE WALL DATA TABLE, DWG. RD-05.

7. LEVELING PAD:
LEVELING PAD STEPS MAY BE LOCATED AT THE DISCRETION OF THE PROPRIETARY WALL MANUFACTURER PROVIDED THAT THE MINIMUM EMBEDMENT IS MAINTAINED AS SPECIFIED IN MSE WALL DATA TABLE, DWG. RD-05. ANY CHANGES TO THE STEP LOCATIONS SHALL BE SUBMITTED TO THE ENGINEER FOR APPROVAL.

8. SLIP JOINTS:
SLIP JOINT LOCATIONS SHOWN ON WALL ELEVATION DRAWINGS ARE MINIMUM REQUIRED JOINTS. THE PROPRIETARY WALL MANUFACTURER MAY ADD SLIP JOINTS AS REQUIRED, HOWEVER SLIP JOINTS SHALL BE HELD TO A MINIMUM ON WALL B3 SO AS NOT TO INTERFERE WITH THE ARTISTS MURAL TO BE PAINTED ON THE WALL (BY OTHERS). SLIP JOINT LOCATIONS SHALL BE SUBMITTED TO THE ENGINEER FOR APPROVAL.

9. WALL BACKFILL:
MSE WALL BACKFILL AND RETAINED FILL PLACED BETWEEN BACK-TO-BACK MSE WALLS SHALL CONSIST OF DELAWARE NO. 57 COARSE AGGREGATE WITH MINIMUM SOIL FRICTION ANGLE OF 34 DEGREES.

10. RETAINED SOIL:
MSE WALLS SHALL BE DESIGNED TO RESIST FORCES FROM RETAINED FILL WITH THE FOLLOWING PARAMETERS:

WALLS NOS.:	A1, A2, A3	B1, B2, B3, B4
SOIL FRICTION ANGLE:	30 DEGREES	34 DEGREES
TOTAL UNIT WEIGHT:	120 PCF	105 PCF
ACTIVE EARTH PRESSURE COEFF.:	0.33	0.28

11. SURCHARGE:
MSE WALL DESIGN SHALL INCLUDE A MINIMUM TRAFFIC SURCHARGE OF 250 PSF APPLIED UNIFORMLY ALONG THE ROADWAY SURFACE.

12. ADDITIONAL LATERAL LOAD:
ABUTMENT ANCHORS AND WALL REINFORCEMENT AT WALL B4 SHALL BE DESIGNED TO RESIST FORCES APPLIED TO THE FIXED BEARINGS AT ABUTMENT 40D. MSE WALL STABILITY CALCULATIONS SHALL INCLUDE APPLIED SUPERSTRUCTURE LOADING.

SEE BR 1-748 DWG. AB-01 FOR DETAILS.

13. LATERAL PILE MOVEMENT:
INTEGRAL ABUTMENT PILES SUPPORTING BRIDGE 1-750 LOCATED BEHIND MSE WALLS A2 AND B2 ARE DESIGNED FOR A THERMAL LATERAL PILE-HEAD DISPLACEMENT OF 0.6 INCHES. MSE WALL FACING PANELS SIZE AND JOINT WIDTHS SHALL BE SELECTED TO TOLERATE THE LATERAL PILE DEFLECTION.

14. FOUNDATION PROOF-ROLL:
AFTER EXCAVATION TO THE BOTTOM OF THE MSE WALL AND PRIOR TO INSTALLING WALL FOOTINGS, WALL LEVELING PAD AND BACKFILL, THE EXPOSED FOUNDATION SOIL SHALL BE PROOF-ROLLED WITH MULTIPLE PASSES OF WALL COMPACTION EQUIPMENT. NO DENSITY TEST IS REQUIRED. UNSUITABLE FOUNDATION MATERIAL SUCH AS ORGANIC SOIL, SATURATED SOIL OR DEBRIS SHALL BE REMOVED AND REPLACED WITH DELAWARE NO. 57 STONE PLACED ON AN APPROVED GEOTEXTILE SEPARATION FABRIC IN ACCORDANCE WITH SECTION 708.

15. REMOVAL OF UNSUITABLE MATERIAL:
SOIL BORINGS HAVE IDENTIFIED MATERIAL, DESCRIBED AS "LOOSE BROWN CLAYEY COARSE TO FINE SAND" AT BRIDGE 1-750 ABUTMENT A THAT MAY BE UNSUITABLE FOR BEARING OF THE MSE WALL AT ELEVATION 23.0 FT TO 19.0 FT. THIS LAYER SHALL BE EXCAVATED AS NECESSARY UNTIL SUITABLE BEARING MATERIAL IS REACHED, AS DIRECTED BY THE ENGINEER. EXCAVATION TO ELEVATION 19.0 FT IS INCLUDED IN THE QUANTITY FOR STRUCTURAL EXCAVATION. EXCAVATION BELOW THE FOOTING ELEVATION SHALL BE BACKFILLED WITH DELAWARE NO. 57 STONE ON AN APPROVED GEOTEXTILE SEPARATION FABRIC IN ACCORDANCE WITH SECTION 708.

16. SEPARATION FABRIC:
REINFORCED FILL FOR ALL MSE WALLS SHALL BE SEPARATED FROM FOUNDATION SOILS USING AN APPROVED GEOTEXTILE SEPARATION FABRIC IN ACCORDANCE WITH SECTION 708.

17. MINIMUM JOINT WIDTH:
MSE WALL PANELS SHALL BE CONSTRUCTED WITH A MINIMUM ½" JOINT WIDTH AFTER INSTALLATION.

18. WALL MONITORING:
THREE-DIMENSIONAL MONITORING POINTS SHALL BE INSTALLED ON THE FRONT FACE OF THE MSE WALL PANELS ABOVE THE FINISHED GRADE AT THE BOTTOM OF THE WALL ACCORDING TO SPECIAL PROVISION FOR SETTLEMENT MONUMENTS. MONITORING POINTS SHALL BE FIXABLE SURVEY TARGETS INSTALLED AT EVERY WALL END, CORNER, AND A MINIMUM OF EVERY 100 FEET ALONG EACH MSE WALL ALIGNMENT. A PLAN SHALL BE SUBMITTED TO THE DEPARTMENT SHOWING MONITORING POINT TYPE, LOCATION, ELEVATION, NAME OR NUMBER DESIGNATION, AND THREE DIMENSIONAL COORDINATE SYSTEM. SURVEY READINGS SHALL PROVIDE THE THREE-DIMENSIONAL COORDINATES OF EACH MONITORING POINT.

A MINIMUM OF TWO MONITORING POINTS SHALL BE INSTALLED ON EXISTING BRIDGE 1-748 (SOUTHBOUND I-95) PIER 40S THROUGH PIER 46S TO VERIFY THAT MSE WALL CONSTRUCTION IS NOT AFFECTING THE EXISTING STRUCTURE. MONITORING POINTS ON EXISTING BRIDGE PIERS SHALL HAVE A MINIMUM 10-FOOT VERTICAL SPACING.

AT A MINIMUM, MONITORING POINTS SHALL BE SURVEYED TWICE WEEKLY FOR THE DURATION OF MSE WALL CONSTRUCTION AND WEEKLY FOR THE REMAINDER OF RAMP D CONSTRUCTION (ABUTMENT CONCRETE AND PAVEMENT). READINGS SHALL BE PERFORMED BY THE CONTRACTOR'S SURVEYOR. UPDATED SURVEY READINGS SHALL BE PROVIDED TO THE ENGINEER FOR REVIEW EVERY WEEK. MONITORING POINT READINGS SHALL BE USED TO DETERMINE THE END OF SETTLEMENT QUARANTINE PERIOD AT ABUTMENT 40D.

19. SETTLEMENT AND QUARANTINE PERIOD:
MSE WALL B4 AT ABUTMENT 40D AND PORTIONS OF MSE WALLS B1 AND B3 FROM WALL B4 TO THE FIRST SLIP JOINT AT STATION 307+80.17 SHALL UNDERGO A SETTLEMENT QUARANTINE PERIOD. THE SETTLEMENT QUARANTINE PERIOD SHALL BEGIN AFTER COMPLETION OF MSE WALL FILL IN THE AREA AND EXTEND FOR A MINIMUM OF 30 DAYS. THE END OF THE SETTLEMENT QUARANTINE PERIOD SHALL BE DETERMINE BY THE ENGINEER BASED ON REVIEW OF SETTLEMENT MONITORING READINGS. ABUTMENT CONCRETE, PAVEMENT, AND MSE WALL COPING SHALL NOT BE INSTALLED IN THE AREA PRIOR TO THE END OF THE SETTLEMENT QUARANTINE PERIOD.

20. WALL SYSTEM:
ONLY ONE MSE WALL SYSTEM SHALL BE USED ON THIS PROJECT.

21. CONSTRUCTION MONITORING INCLINOMETERS:
TWO CONSTRUCTION MONITORING INCLINOMETERS SHALL BE INSTALLED BETWEEN THE NEW MSE WALL AND EXISTING BRIDGE 1-748S PIERS AS SHOWN ON DWG. FT-02 AND AS DESCRIBED IN PROVISION 604502 - PROTECTION OF EXISTING STRUCTURES. INCLINOMETER 1 SHALL BE LOCATED BETWEEN NEW ABUTMENT 40D NEAR WALL STATION 308+70 AND THE EXISTING BRIDGE 1-748S PIER 40S. INCLINOMETER 2 SHALL BE LOCATED BETWEEN THE NEW MSE WALL NEAR STATION 308+00 AND EXISTING BRIDGE 1-748S PIER 41S. THE INCLINOMETERS SHALL BE INSTALLED, GROUTED, AND INITIAL READING PERFORMED PRIOR TO BEGINNING MSE WALL CONSTRUCTION.

A LOG OF MATERIAL ENCOUNTERED IN BOREHOLES FOR INCLINOMETER INSTALLATION SHALL BE PREPARED AT THE TIME OF INSTALLATION. STANDARD PENETRATION TESTING (SPT) AND SOIL SAMPLING SHALL BE PERFORMED IN THE BOREHOLE. THE BOTTOM OF INCLINOMETERS SHALL EXTEND TO OR BELOW ELEVATION 10 FT. THE BOTTOM OF THE INCLINOMETERS SHALL BE EMBEDDED IN A MINIMUM OF 5 FEET OF RESIDUAL SOIL, WEATHERED ROCK OR ROCK.

INCLINOMETER READINGS SHALL BE PERFORMED A MINIMUM OF ONCE A WEEK DURING WALL CONSTRUCTION AND THE DURATION OF THE SETTLEMENT QUARANTINE PERIOD. INCLINOMETER READINGS SHALL CONTINUE ON A MONTHLY BASIS UNTIL THE END OF CONSTRUCTION. SEE PROVISION 604502 - PROTECTION OF EXISTING STRUCTURES FOR ADDITIONAL INCLINOMETER.

NOTES:

1. FOR GEOMETRIC LAYOUT, SEE DWG. FT-02.
2. ALL LINEAR DIMENSIONS GIVEN ALONG THE FRONT FACE OF MSE WALL.
3. ABUTMENT A PILES NOT SHOWN FOR CLARITY.
4. CONTRACTION AND EXPANSION JOINTS IN CONCRETE COPING SHALL ALIGN WITH THE VERTICAL JOINTS IN THE MSE WALL PANELS OR BE PLACED AS RECOMMENDED BY THE MSE WALL MANUFACTURER.

N:\31987-004\Contract_Ramp_D\CADD\Bridge\BR1-750_RD01.dgn
8/23/2019 4:32:57 PM

ADDENDA / REVISIONS	

SCALE AS NOTED

REHABILITATION OF I-95, 2ND STREET ON-RAMP IMPROVEMENTS

CONTRACT	BRIDGE NO.	1 750 6148
T201907402	DESIGNED BY: D. NIZAMOFF	
COUNTY		
NEW CASTLE	CHECKED BY: W. GESCHREI	

DEVELOPED ELEVATION MSE WALL A AND MSE WALL NOTES

RD-01
SECTION
WRA
SHEET NO.
184

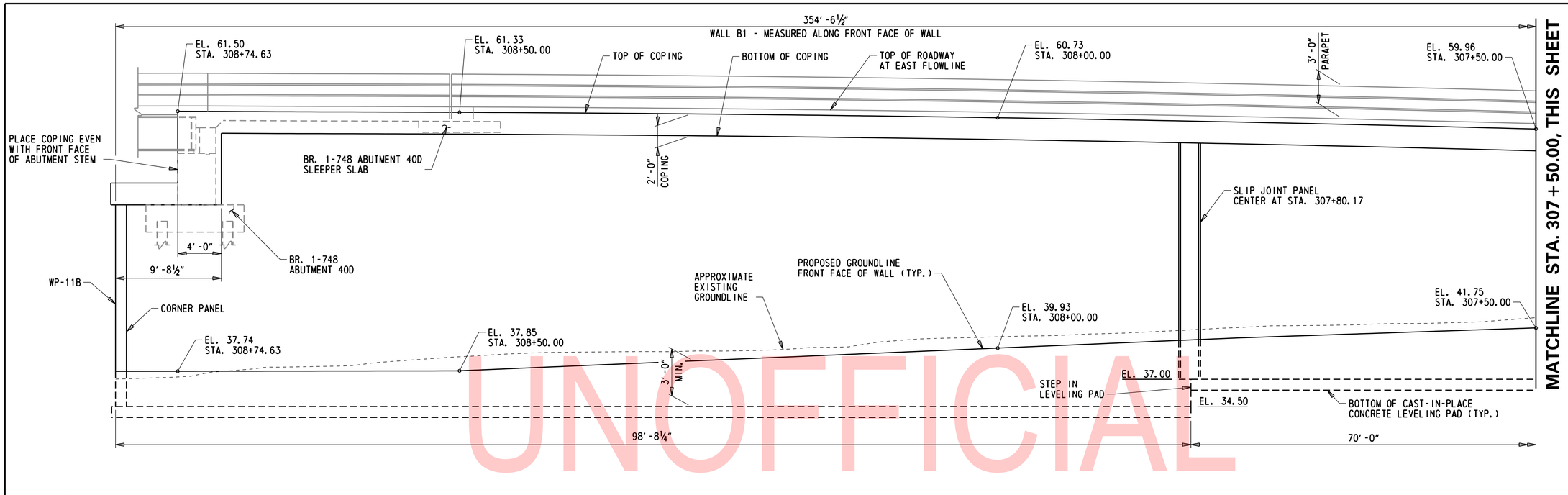

DEVELOPED ELEVATION - WALL B

1″ = 5′-0″

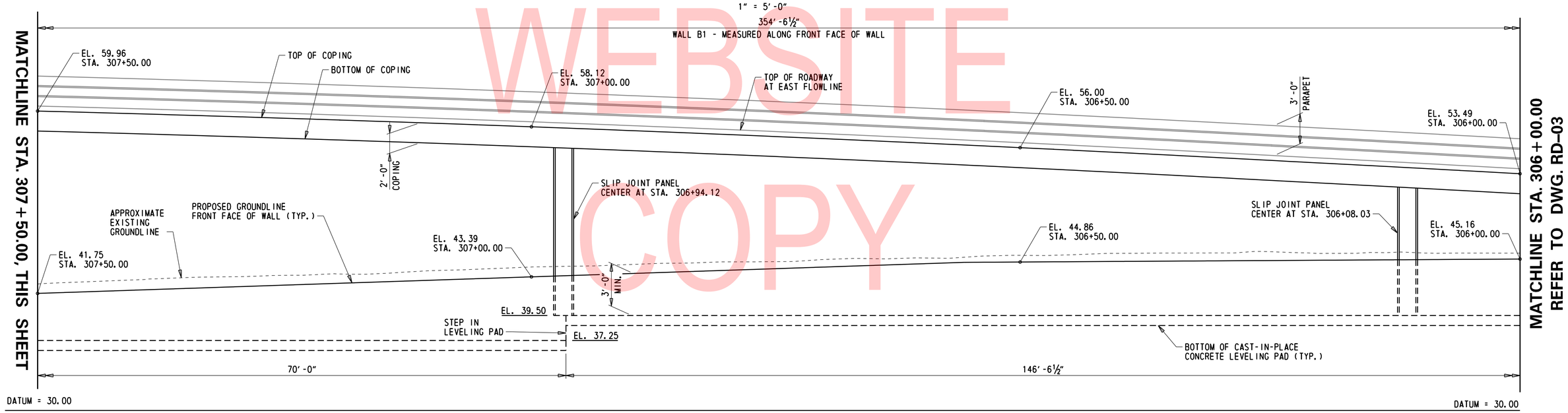

DEVELOPED ELEVATION - WALL B

1″ = 5′-0″

NOTES:

1. FOR GEOMETRIC LAYOUT, SEE DWGS. FT-01 AND FT-02.
2. FOR WALL B2, REFER TO DWG. RD-03.
3. FOR WALL B3, REFER TO DWGS. RD-03 TO RD-04.
4. FOR WALL B4, REFER TO DWG. RD-04.
5. LEVELING PAD LINEAR DIMENSIONS SHOWN ALONG THE FRONT FACE OF WALL.
6. ELEVATIONS AND STATIONS SHOWN ALONG TOP OF WALL ARE FOR THE TOP OF THE MSE COPING.
7. FOR ADDITIONAL MSE WALL NOTES, REFER TO DWG. RD-01.

UNOFFICIAL WEBSITE COPY

ADDENDA / REVISIONS	SCALE AS NOTED	REHABILITATION OF I-95, 2ND STREET ON-RAMP IMPROVEMENTS	CONTRACT T201907402	BRIDGE NO. 1 750 6148	DEVELOPED ELEVATION MSE WALL B – 1	RD-02
			COUNTY NEW CASTLE	DESIGNED BY: D. NIZAMOFF		SECTION WRA
				CHECKED BY: W. GESCHREI		SHEET NO. 185

N:\31987-004\Contract_Ramp_D\CADD\Bridge\BR1-750_RD02.dgn
8/23/2019 4:32:58 PM

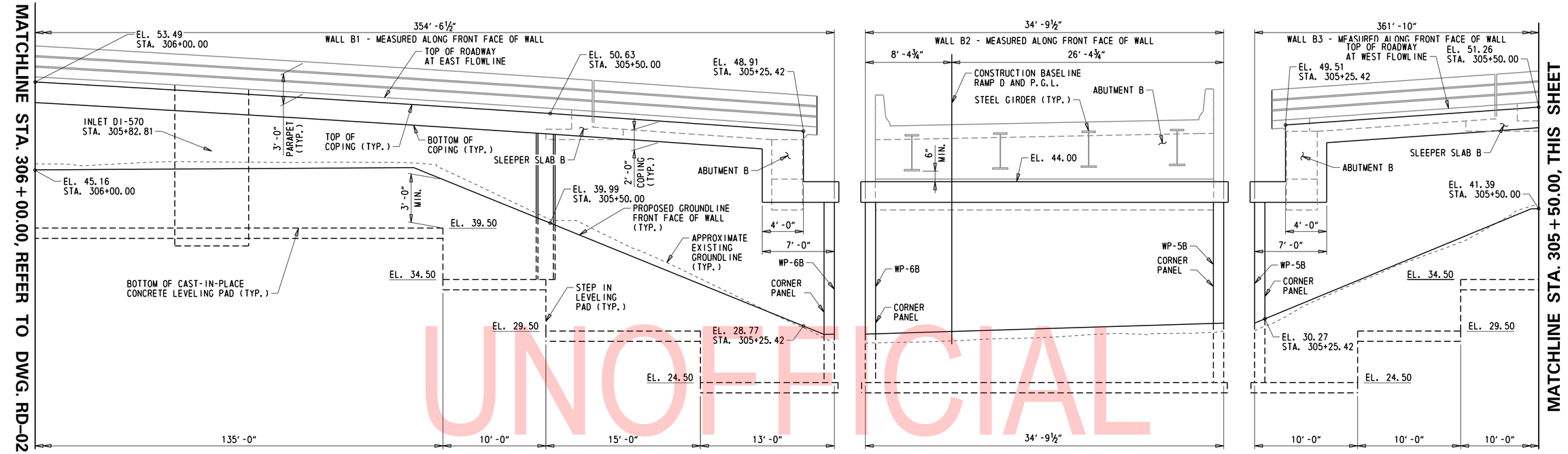

DEVELOPED ELEVATION - WALL B

1″ = 5′-0″

NOTE:
ABUTMENT B PILES NOT SHOWN FOR CLARITY.

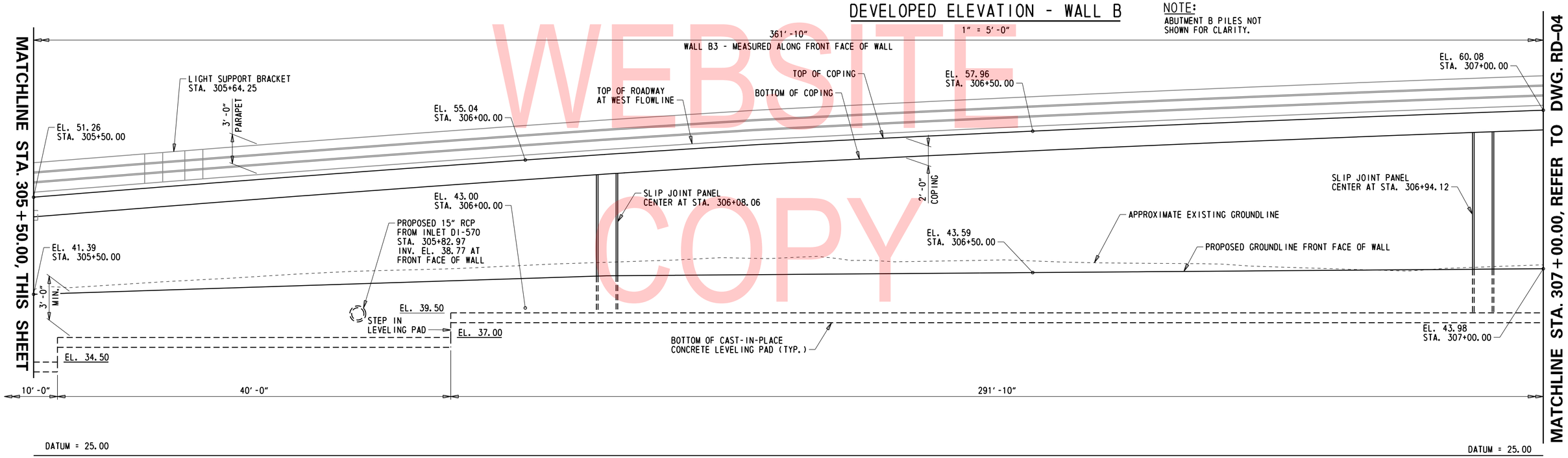

DEVELOPED ELEVATION - WALL B

1″ = 5′-0″

NOTES:

1. FOR GEOMETRIC LAYOUT, SEE DWGS. FT-01 AND FT-02.
2. FOR ADDITIONAL LENGTH OF WALL B1, REFER TO DWG. RD-03.
3. FOR WALL B4, REFER TO DWG. RD-04.
4. LEVELING PAD LINEAR DIMENSIONS SHOWN ALONG THE FRONT FACE OF WALL.
5. ELEVATIONS AND STATIONS SHOWN ALONG TOP OF WALL ARE FOR THE TOP OF THE MSE COPING.
6. FOR MSE WALL NOTES, REFER TO DWG. RD-01.

UNOFFICIAL WEBSITE COPY

N:\31987-004\Contract_Ramp_D\CADD\Bridge\BR1-750_RD03.dgn
8/23/2019 4:32:58 PM

ADDENDA / REVISIONS		SCALE AS NOTED	REHABILITATION OF I-95, 2ND STREET ON-RAMP IMPROVEMENTS	CONTRACT T201907402	BRIDGE NO. 1 750 6148	DEVELOPED ELEVATION MSE WALL B – 2	RD-03
				COUNTY NEW CASTLE	DESIGNED BY: D. NIZAMOFF		SECTION WRA
					CHECKED BY: W. GESCHREI		SHEET NO. 186

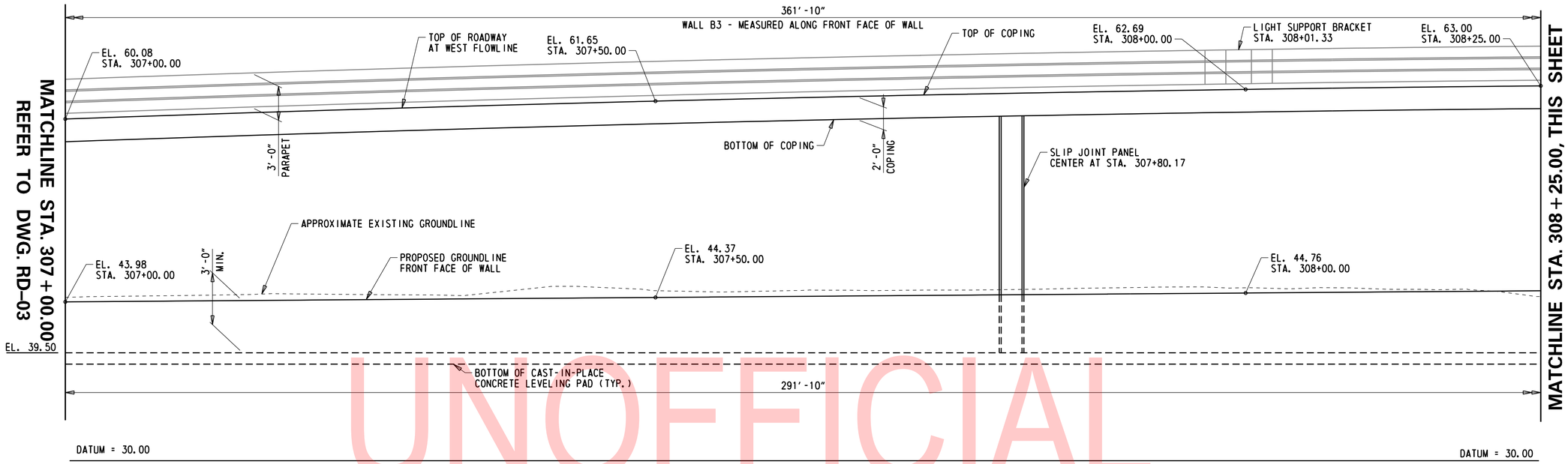

DEVELOPED ELEVATION - WALL B

1" = 5'-0"

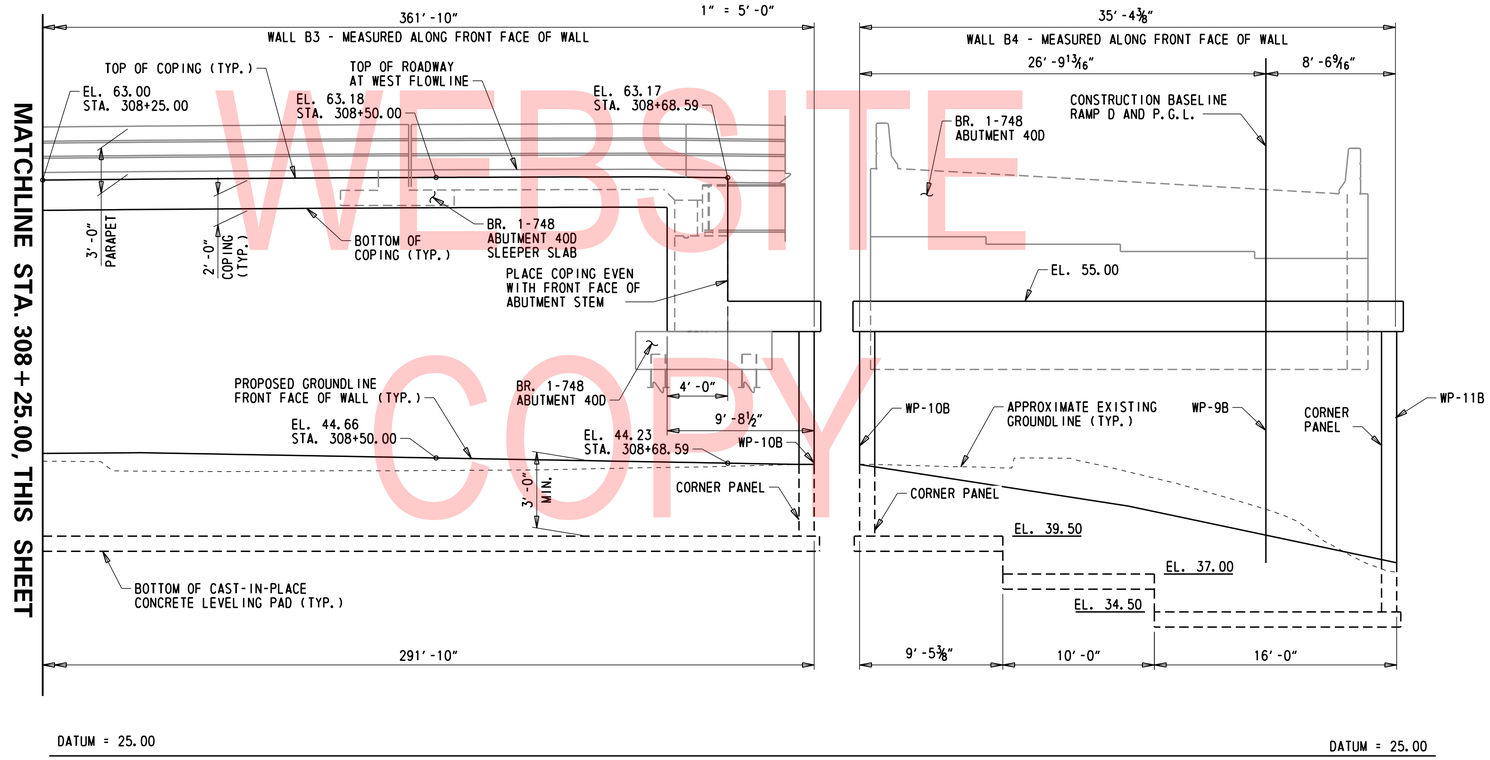

DEVELOPED ELEVATION - WALL B

1" = 5'-0"

NOTE:

BR. 1-748 STEEL GIRDERS AND H-PILES NOT SHOWN FOR CLARITY.

NOTES:

1. FOR GEOMETRIC LAYOUT, SEE DWGS. FT-01 AND FT-02.
2. FOR WALL B1 DETAILS, REFER TO DWGS. RD-02 AND RD-03.
3. FOR WALL B2 DETAILS, REFER TO DWG. RD-03.
4. FOR ADDITIONAL AREAS OF WALL B3, REFER TO DWG. RD-03.
5. LEVELING PAD LINEAR DIMENSIONS SHOWN ALONG THE FRONT FACE OF WALL.
6. ELEVATIONS AND STATIONS SHOWN ALONG TOP OF WALL ARE FOR THE TOP OF THE MSE COPING.
7. FOR MSE WALL NOTES AND SETTLEMENT QUARANTINE PERIOD, REFER TO DWG. RD-01.

UNOFFICIAL WEBSITE COPY

N:\31987-004\Contract_Ramp_D\CADD\Bridge\BR1-750_RD04.dgn
8/23/2019 4:32:59 PM

ADDENDA / REVISIONS	SCALE AS NOTED	REHABILITATION OF I-95, 2ND STREET ON-RAMP IMPROVEMENTS	CONTRACT T201907402	BRIDGE NO. 1 750 6148	DEVELOPED ELEVATION MSE WALL B – 3	RD-04
			COUNTY NEW CASTLE	DESIGNED BY: D. NIZAMOFF		SECTION WRA
				CHECKED BY: W. GESCHREI		SHEET NO. 187

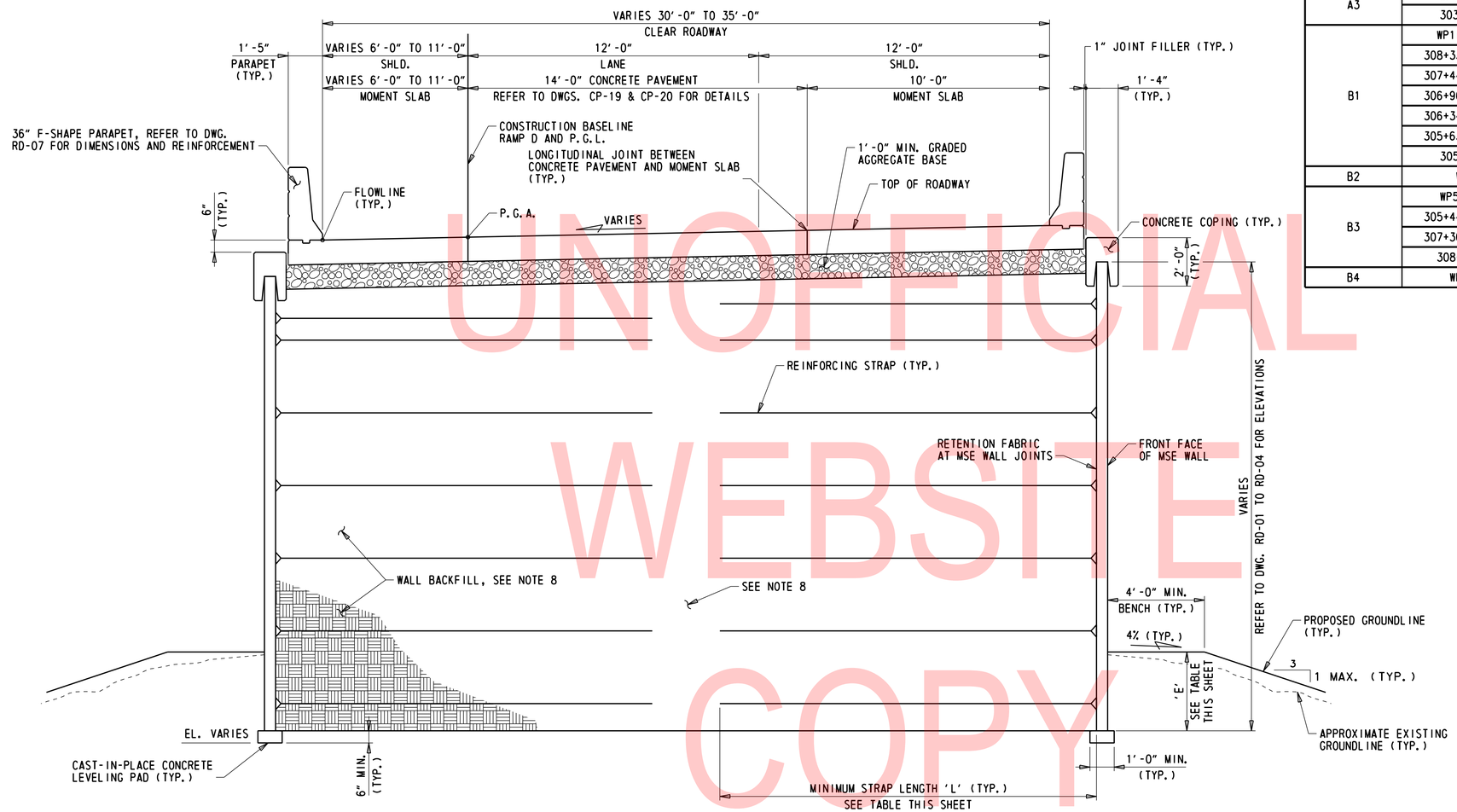

MSE WALL TYPICAL SECTION

(LOOKING STATION AHEAD TO SOUTH)

3/8" = 1'-0"

MSE WALL DATA

WALL	STATION RANGE (FROM - TO)	MINIMUM REINFORCING STRAP LENGTH 'L' (FT.)	MINIMUM WALL TOE EMBEDMENT 'E' (FT.)	STRENGTH FACTORED BEARING RESISTANCE (PSF) (SEE NOTE 5)	EXTREME EVENT FACTORED BEARING RESISTANCE (PSF) (SEE NOTE 6)
A1	WP7A - 303+98.58	8.0	2.0	3,700	5,700
	303+98.58 - WP5A	16.0	3.0	7,200	9,700
A2	WP5A - WP6A	16.0	3.0	7,200	9,700
A3	WP6A - 303+98.58	16.0	3.0	7,200	9,700
	303+98.58 - WP8A	8.0	2.0	3,700	5,700
B1	WP11B - 308+33.00	23.0	3.0	10,500	14,000
	308+33.00 - 307+44.00	19.0	3.0	8,200	10,500
	307+44.00 - 306+96.00	16.0	3.0	7,200	9,700
	306+96.00 - 306+34.00	15.0	3.0	7,100	9,800
	306+34.00 - 305+63.00	12.0	3.0	5,700	8,000
	305+63.00 - 305+44.42	15.0	3.0	7,200	9,700
	305+44.42 - WP6B	19.0	3.0	8,200	10,500
B2	WP6B - WP5B	19.0	3.0	8,200	10,500
B3	WP5B - 305+44.42	19.0	3.0	8,200	10,500
	305+44.42 - 307+30.00	15.0	3.0	7,100	9,800
	307+30.00 - 308+59.03	16.0	3.0	7,200	9,700
	308+59.03 - WP10B	23.0	3.0	10,500	14,000
B4	WP10B - WP11B	23.0	3.0	10,500	14,000

NOTES:

1. FOR MSE WALL LAYOUT, REFER TO DWGS. FT-01 AND FT-02.
2. FOR MSE WALL ELEVATIONS, REFER TO DWGS. RD-01 TO RD-04.
3. FOR MOMENT SLAB REINFORCEMENT, REFER TO DWGS. RD-06 TO RD-09.
4. MSE WALL SHALL BE IN CONFORMANCE WITH SECTION 607 OF THE STANDARD SPECIFICATIONS.
5. STRENGTH FACTORED BEARING RESISTANCE CALCULATED USING A RESISTANCE FACTOR OF 0.65.
6. EXTREME EVENT BEARING RESISTANCE CALCULATED USING A RESISTANCE FACTOR OF 1.00.
7. REINFORCING STRAPS FROM BACK TO BACK OF WALLS SHALL BE OFFSET OR STAGGERED FROM EACH OTHER. THE STRAPS FROM THE BACK TO BACK WALLS SHALL NOT BE JOINED.
8. AREAS OF FILL BETWEEN REINFORCED BACKFILL SECTIONS WILL NOT BE MEASURED BUT WILL BE CONSIDERED INCIDENTAL TO ITEM 607000 - MECHANICALLY STABILIZED EARTH WALLS. SEE NOTE 9 ON DWG. RD-01.

UNOFFICIAL WEBSITE COPY

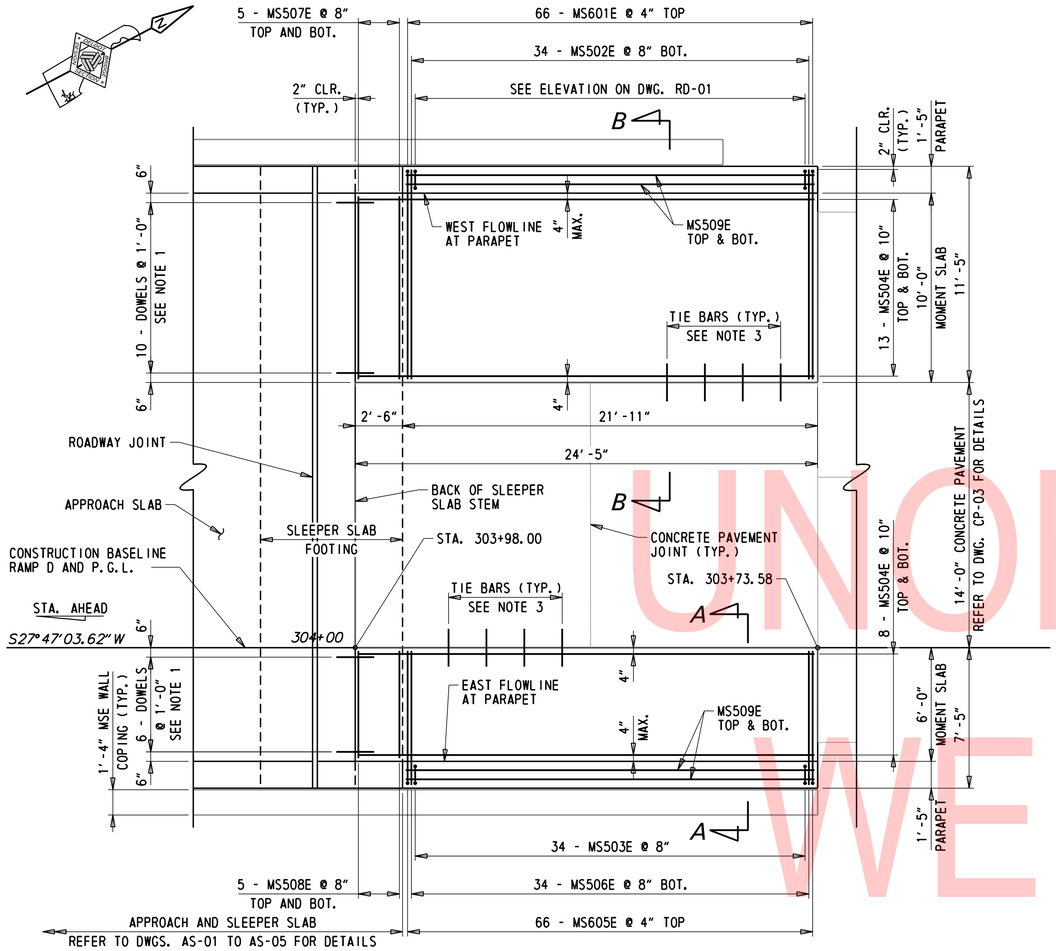

MOMENT SLAB REINFORCEMENT PLAN - MSE WALL A

¼" = 1'-0"

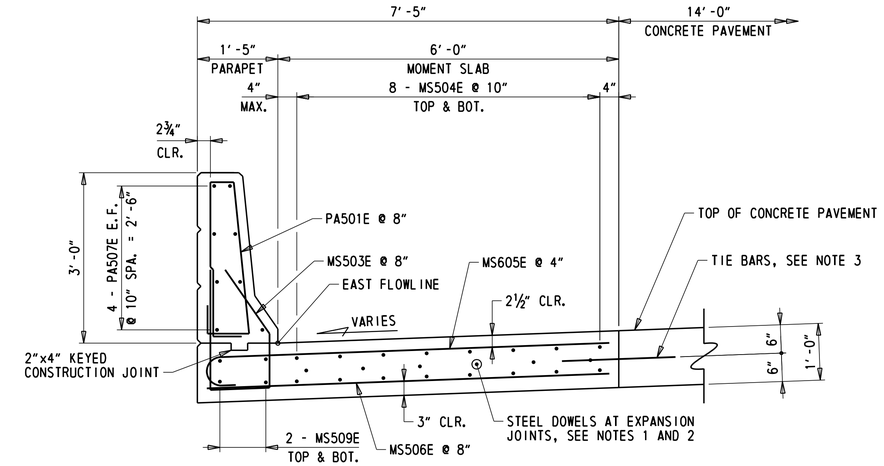

SECTION A-A

¾" = 1'-0"

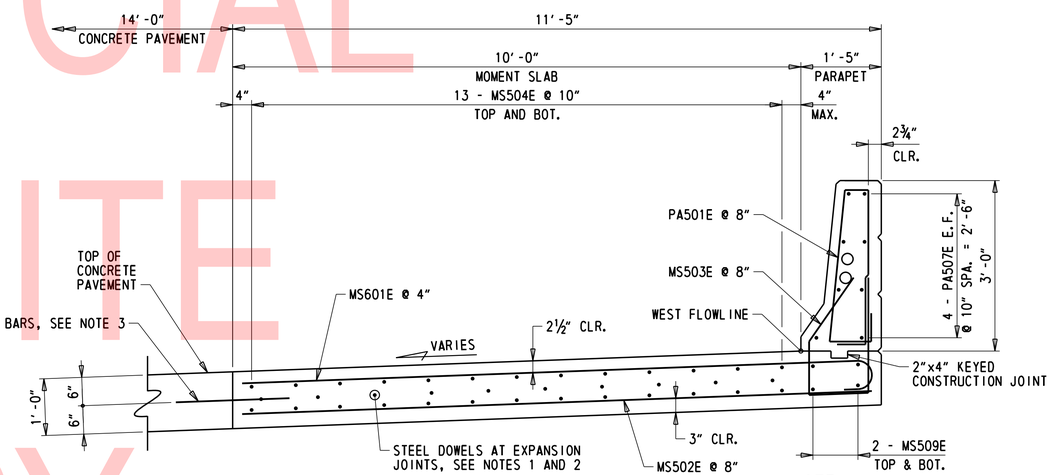

SECTION B-B

¾" = 1'-0"

NOTE:

LONGITUDINAL BARS SHOWN ARE AT MSE WALL A, FOR MSE WALL B MOMENT SLABS, SEE PLAN LAYOUT ON DWGS. RD-08, RD-10, RD-12..

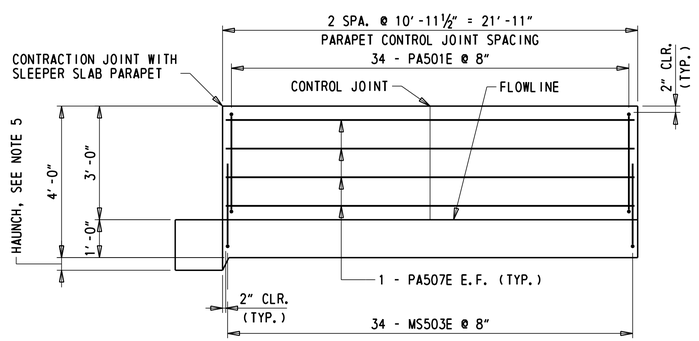

PARAPET REINFORCEMENT DEVELOPED ELEVATION - MSE WALL A3

HORIZONTAL - ¼" = 1'-0"
VERTICAL - ½" = 1'-0"

NOTES:

1. FOR STEEL DOWEL CONNECTION TO SLEEPER SLAB, SEE DETAIL A ON DWG. AS-04. COST OF DOWELS SHALL BE INCIDENTAL TO ITEM 610018 - PORTLAND CEMENT CONCRETE MASONRY, APPROACH SLAB, CLASS D.
2. FOR STEEL DOWEL CONNECTION BETWEEN MOMENT SLAB SEGMENTS, SEE STANDARD NO. P-1. COST OF DOWELS SHALL BE INCIDENTAL TO ITEM 610018 - PORTLAND CEMENT CONCRETE MASONRY, APPROACH SLAB, CLASS D.
3. FOR DETAILS OF TIE BARS BETWEEN MOMENT SLABS AND CONCRETE PAVEMENT, SEE STANDARD NO. P-1, P.C.C. PAVEMENT. COST OF DOWELS SHALL BE INCIDENTAL TO ITEM 610018 - PORTLAND CEMENT CONCRETE MASONRY, APPROACH SLAB, CLASS D.
4. FOR MSE WALL TYPICAL SECTION, REFER TO DWG. RD-05.
5. MOMENT SLABS SHALL BE HAUNCHED TO REST ON TOP OF SLEEPER SLAB FOOTING.

UNOFFICIAL WEBSITE COPY

N:\31987-004\Contract_Ramp_D\CADD\Bridge\BR1-750_RD06.dgn
8/23/2019 4:53:01 PM

ADDENDA / REVISIONS	SCALE AS NOTED	REHABILITATION OF I-95, 2ND STREET ON-RAMP IMPROVEMENTS	CONTRACT T201907402	BRIDGE NO. 1 750 6148	MSE WALL MOMENT SLAB REINFORCEMENT PLAN – 1	RD-06
			COUNTY NEW CASTLE	DESIGNED BY: D. NIZAMOFF		SECTION WRA
				CHECKED BY: W. GESCHREI		SHEET NO. 189

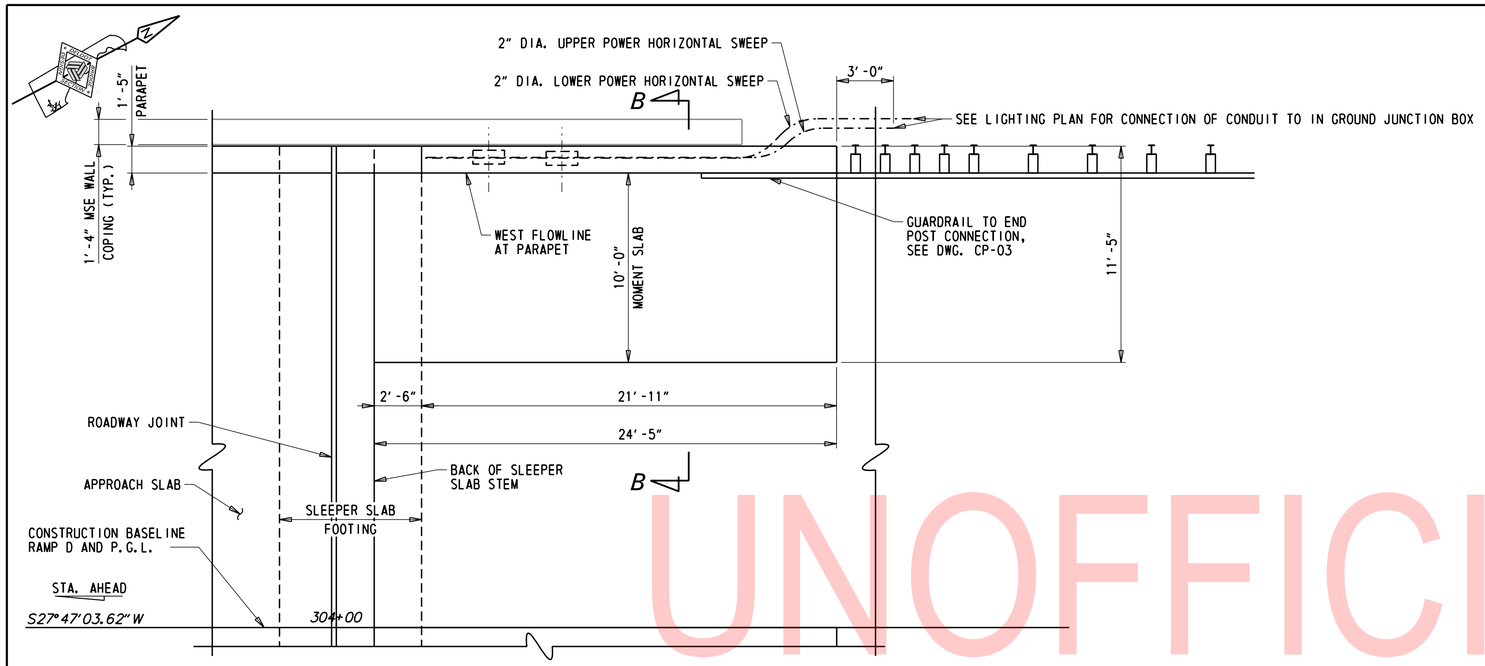

NOTES:

1. FOR SECTION B-B, SEE DWG. RD-06.

PARAPET CONDUIT HORIZONTAL SWEEP DETAIL

¼" = 1'-0"

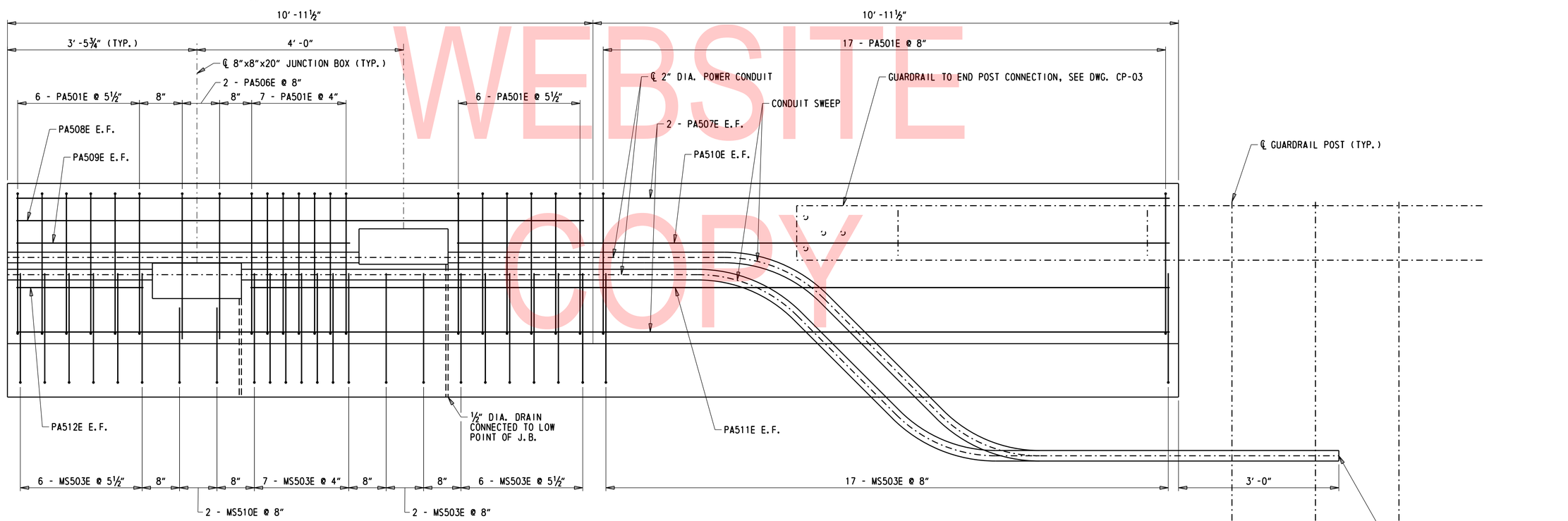

ELEVATION - ABUTMENT A MOMENT SLAB W/ J.B.'S AT WALL A1

1" = 1'-0"

UNOFFICIAL WEBSITE COPY

N:\31987-004\Contract_Ramp_D\CADD\Bridge\BR1-750_RD07.dgn
8/23/2019 4:13:50 PM

ADDENDA / REVISIONS	SCALE AS NOTED	REHABILITATION OF I-95, 2ND STREET ON-RAMP IMPROVEMENTS	CONTRACT T201907402	BRIDGE NO. 1 750 6148	MSE WALL MOMENT SLAB REINFORCEMENT PLAN – 2	RD-07
			COUNTY NEW CASTLE	DESIGNED BY: D. NIZAMOFF		SECTION WRA
				CHECKED BY: W. GESCHREI		SHEET NO. 190

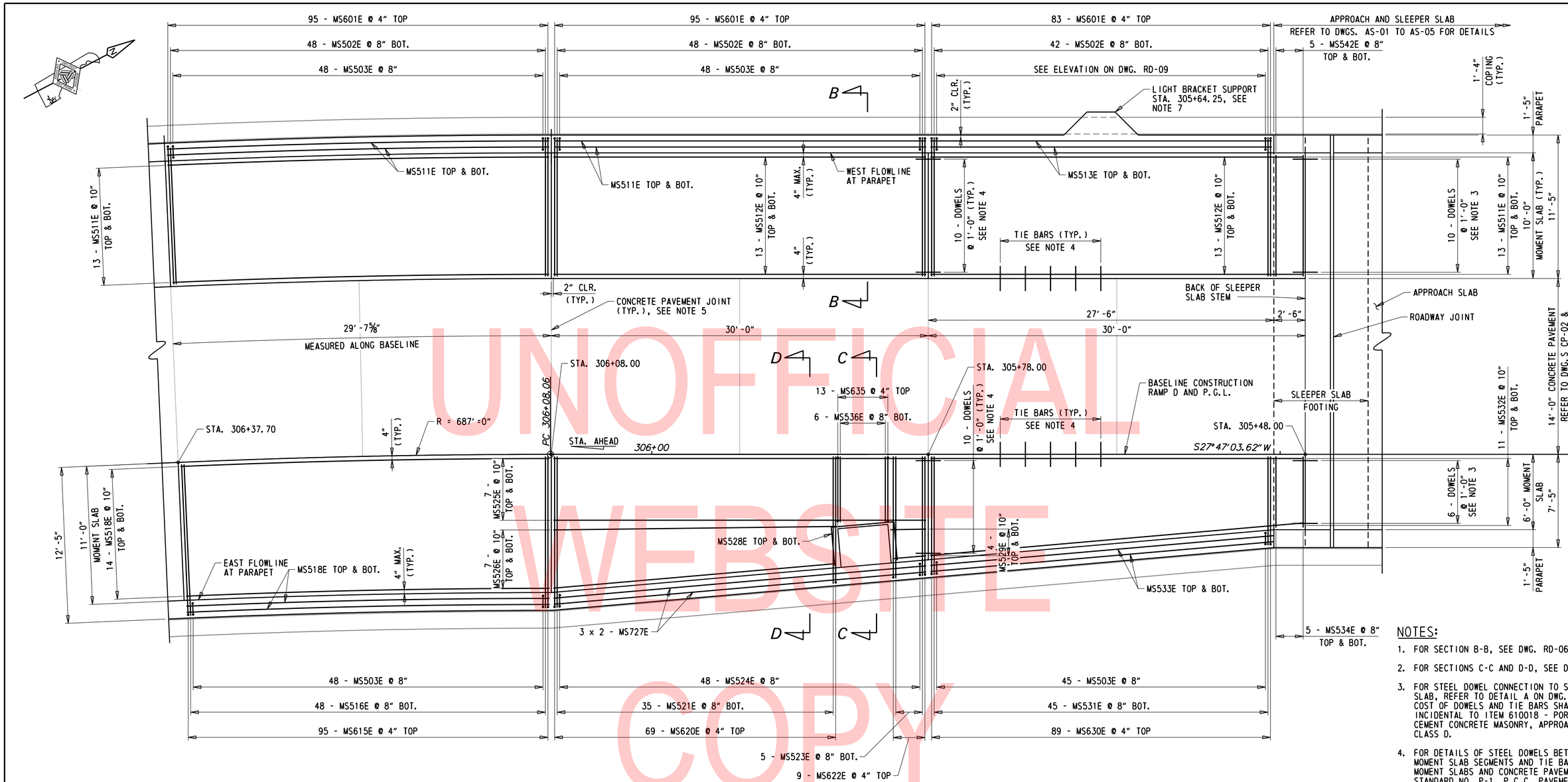

UNOFFICIAL WEBSITE COPY

MOMENT SLAB REINFORCEMENT PLAN - MSE WALL B

(STA. 305+48.00 TO STA. 306+37.70)

¼" = 1'-0"

NOTES:

1. FOR SECTION B-B, SEE DWG. RD-06.
2. FOR SECTIONS C-C AND D-D, SEE DWG. RD-14.
3. FOR STEEL DOWEL CONNECTION TO SLEEPER SLAB, REFER TO DETAIL A ON DWG. AS-04. COST OF DOWELS AND TIE BARS SHALL BE INCIDENTAL TO ITEM 610018 - PORTLAND CEMENT CONCRETE MASONRY, APPROACH SLAB, CLASS D.
4. FOR DETAILS OF STEEL DOWELS BETWEEN MOMENT SLAB SEGMENTS AND TIE BARS BETWEEN MOMENT SLABS AND CONCRETE PAVEMENT, SEE STANDARD NO. P-1, P.C.C. PAVEMENT. COST OF DOWELS SHALL BE INCIDENTAL TO ITEM 610018 - PORTLAND CEMENT CONCRETE MASONRY, APPROACH SLAB, CLASS D.
5. TRANSVERSE JOINTS BETWEEN MOMENT SLAB SEGMENTS SHALL ALIGN WITH TRANSVERSE JOINTS IN THE CONCRETE PAVEMENT. FOR CONCRETE PAVMENT DETAILS, REFER TO DWGS. CP-02 & CP-03 FOR DETAILS.
6. FOR MSE WALL TYPICAL SECTION, SEE DWG. RD-05.
7. FOR LIGHT BRACKET SUPPORT DETAILS AND REINFORCEMENT, SEE DWG. RD-14 AND PA-03.
8. MOMENT SLABS SHALL BE HAUNCHED TO REST ON TOP OF THE SLEEPER SLAB FOOTING.

N:\31987-004\Contract_Ramp_D\CADD\Bridge\BR1-750_RD08.dgn
8/23/2019 4:33:03 PM

ADDENDA / REVISIONS	SCALE AS NOTED	REHABILITATION OF I-95, 2ND STREET ON-RAMP IMPROVEMENTS	CONTRACT T201907402	BRIDGE NO. 1 750 6148	MSE WALL MOMENT SLAB REINFORCEMENT PLAN – 3	RD-08
			COUNTY NEW CASTLE	DESIGNED BY: D. NIZAMOFF		SECTION WRA
				CHECKED BY: W. GESCHREI		SHEET NO. 191

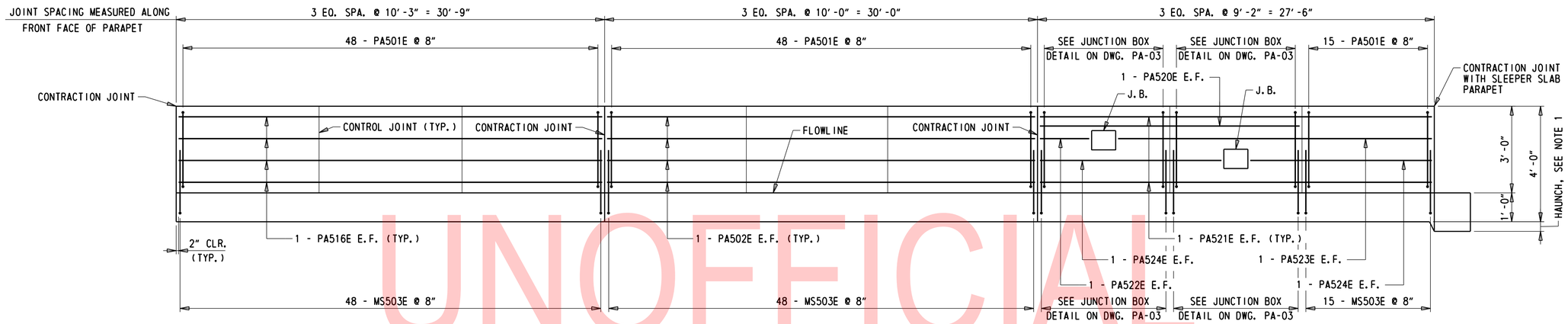

PARAPET REINFORCEMENT DEVELOPED ELEVATION - MSE WALL B WEST PARAPET

HORIZONTAL - 1/4" = 1'-0"
VERTICAL - 1/2" = 1'-0"

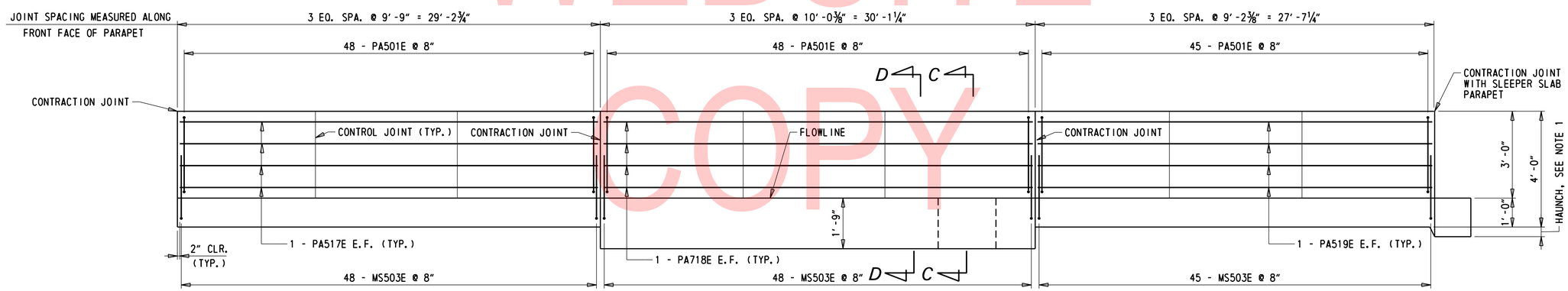

PARAPET REINFORCEMENT DEVELOPED ELEVATION - MSE WALL B EAST PARAPET

HORIZONTAL - 1/4" = 1'-0"
VERTICAL - 1/2" = 1'-0"

NOTES:

1. MOMENT SLABS SHALL BE HAUNCHED TO REST ON TOP OF THE SLEEPER SLAB FOOTING.
2. FOR C-C AND D-D, SEE DWG. RD-14.

UNOFFICIAL WEBSITE COPY

N:\31987-004\Contract_Ramp_D\CADD\Bridge\BRI-750_RD09.dgn
8/23/2019 4:33:04 PM

ADDENDA / REVISIONS	SCALE AS NOTED	REHABILITATION OF I-95, 2ND STREET ON-RAMP IMPROVEMENTS	CONTRACT T201907402	BRIDGE NO. 1 750 6148	MSE WALL MOMENT SLAB REINFORCEMENT PLAN – 4	RD–09
			COUNTY NEW CASTLE	DESIGNED BY: D. NIZAMOFF		SECTION WRA
				CHECKED BY: W. GESCHREI		SHEET NO. 192

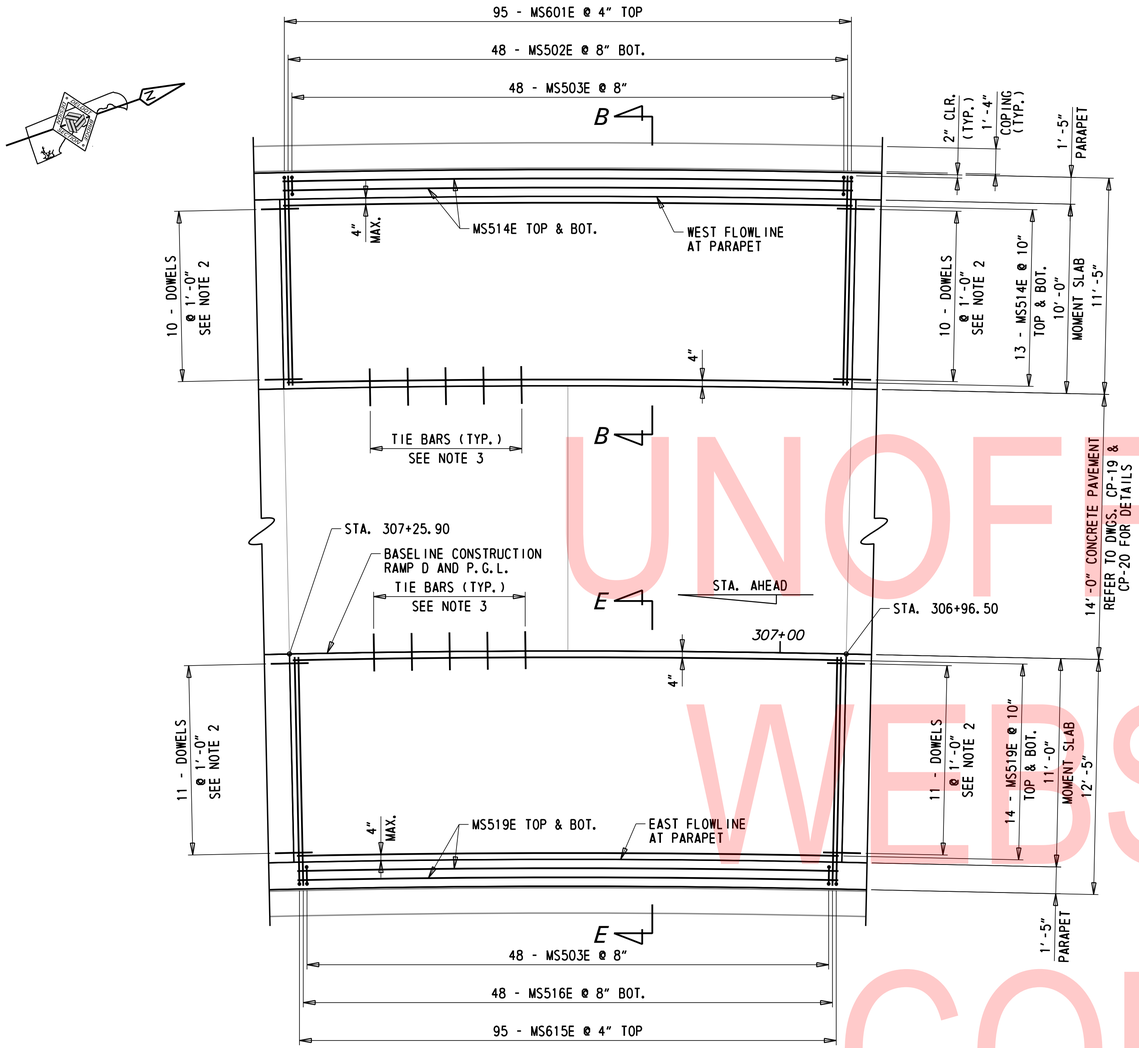

TYPICAL MOMENT SLAB REINFORCEMENT PLAN - MSE WALL B (SEE NOTE 6)

(STA. 306+37.70 TO STA. 307+84.70)

¼" = 1'-0"

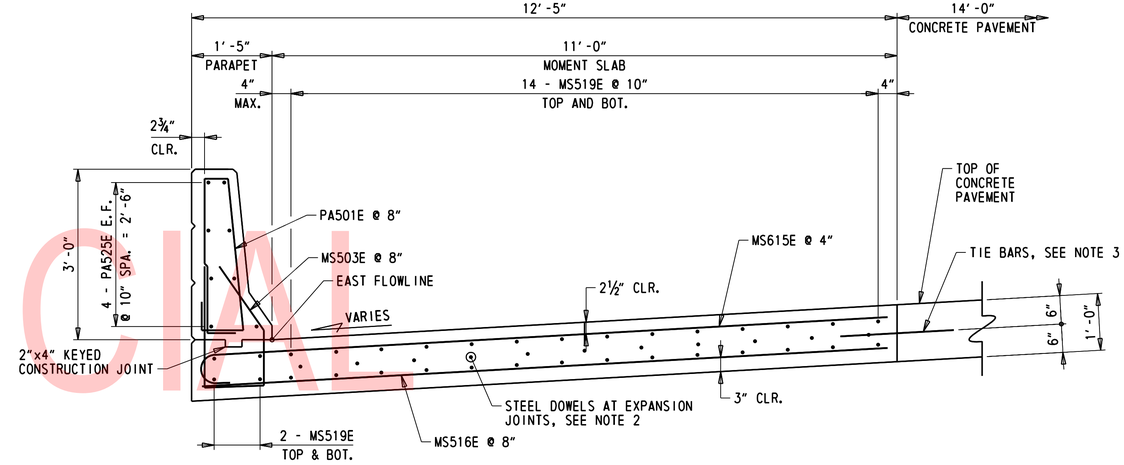

SECTION E-E

¾" = 1'-0"

NOTES:

1. FOR SECTION B-B, SEE DWG. RD-06.
2. FOR STEEL DOWEL CONNECTION BETWEEN MOMENT SLAB SEGMENTS, SEE STANDARD NO. P-1. COST OF DOWELS SHALL BE INCIDENTAL TO ITEM 610018 - PORTLAND CEMENT CONCRETE MASONRY, APPROACH SLAB, CLASS D.
3. FOR DETAILS OF TIE BARS BETWEEN MOMENT SLABS AND CONCRETE PAVEMENT, SEE STANDARD NO. P-1, P.C.C. PAVEMENT. COST OF DOWELS SHALL BE INCIDENTAL TO ITEM 610018 - PORTLAND CEMENT CONCRETE MASONRY, APPROACH SLAB, CLASS D.
4. FOR MSE WALL TYPICAL SECTION, SEE TO DWG. RD-05.
5. TRANSVERSE JOINTS BETWEEN MOMENT SLAB SEGMENTS SHALL ALIGN WITH TRANSVERSE JOINTS IN THE CONCRETE PAVEMENT. FOR CONCRETE PAVEMENT DETAILS, SEE DWGS. CP-02 AND CP-03 FOR DETAILS.
6. THE REINFORCEMENT DETAILS SHOWN IN THE 10'-0" AND 11'-0" MOMENT SLABS FROM STA. 306+96.50 TO 307+25.90 ARE TYPICAL FOR ALL MOMENT SLABS BETWEEN STA. 306+37.70 TO 307.84.70.

UNOFFICIAL WEBSITE COPY

ADDENDA / REVISIONS	SCALE AS NOTED	REHABILITATION OF I-95, 2ND STREET ON-RAMP IMPROVEMENTS	CONTRACT T201907402	BRIDGE NO. 1 750 6148	MSE WALL MOMENT SLAB REINFORCEMENT PLAN – 5	RD-10
			COUNTY NEW CASTLE	DESIGNED BY: D. NIZAMOFF		SECTION WRA
				CHECKED BY: W. GESCHREI		SHEET NO. 193

N:\31987-004\Contract_Ramp_D\CADD\Bridge\BRI-750_RD10.dgn
8/23/2019 4:33:06 PM

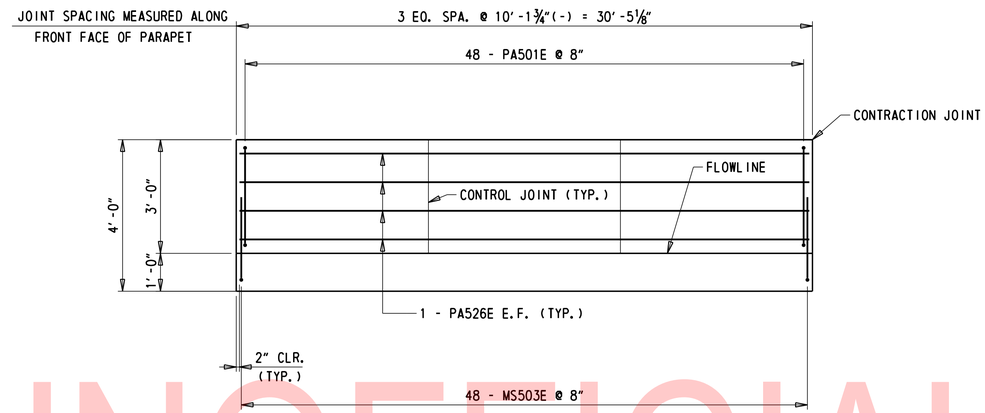

PARAPET REINFORCEMENT DEVELOPED ELEVATION - MSE WALL B WEST PARAPET

HORIZONTAL - ¼" = 1'-0"
VERTICAL - ½" = 1'-0"

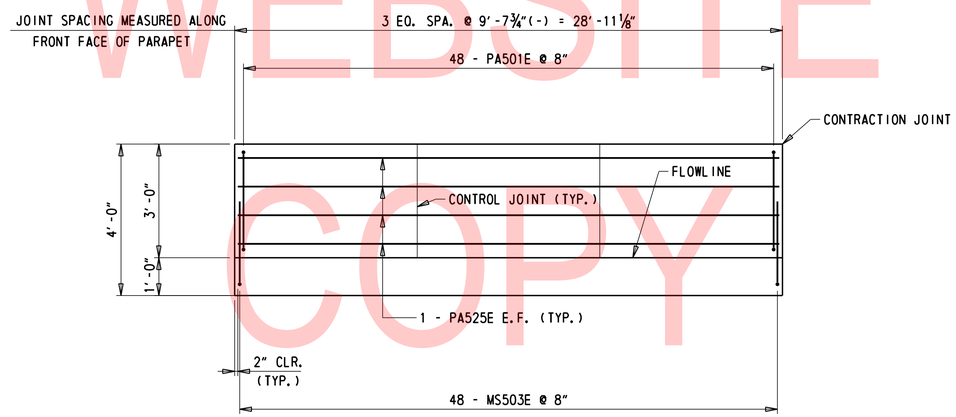

PARAPET REINFORCEMENT DEVELOPED ELEVATION - MSE WALL B EAST PARAPET

HORIZONTAL - ¼" = 1'-0"
VERTICAL - ½" = 1'-0"

UNOFFICIAL WEBSITE COPY

N:\31987-004\Contract_Ramp_D\CADD\Bridge\BRI-750_RD11.dgn
8/23/2019 4:33:07 PM

ADDENDA / REVISIONS	SCALE AS NOTED	REHABILITATION OF I-95, 2ND STREET ON-RAMP IMPROVEMENTS	CONTRACT T201907402	BRIDGE NO. 1 750 6148	MSE WALL MOMENT SLAB REINFORCEMENT PLAN – 6	RD-11
			COUNTY NEW CASTLE	DESIGNED BY: D. NIZAMOFF		SECTION WRA
				CHECKED BY: W. GESCHREI		SHEET NO. 194

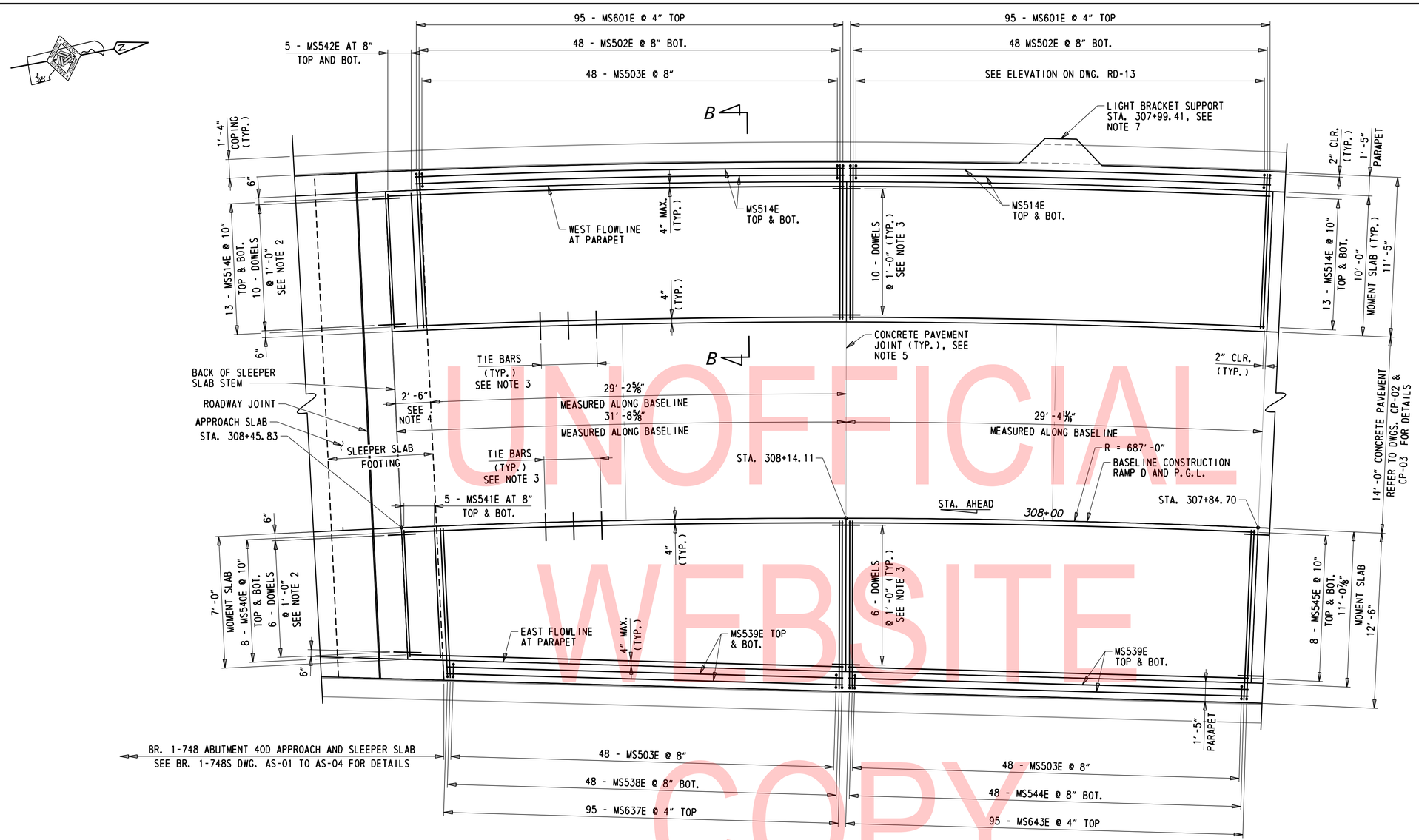

MOMENT SLAB REINFORCEMENT PLAN - MSE WALL B

(STA. 307+84.70 TO STA. 308+45.83)

¼" = 1'-0"

NOTES:

1. FOR SECTION B-B, SEE DWG. RD-06.
2. FOR STEEL DOWEL CONNECTION TO SLEEPER SLAB, REFER TO DETAIL A ON DWG. AS-04. COST OF DOWELS SHALL BE INCIDENTAL TO ITEM 610018 - PORTLAND CEMENT CONCRETE MASONRY, APPROACH SLAB, CLASS D.
3. FOR DETAILS OF STEEL DOWELS BETWEEN MOMENT SLAB SEGMENTS AND TIE BARS BETWEEN MOMENT SLABS AND CONCRETE PAVEMENT, SEE STANDARD NO. P-1, P.C.C. PAVEMENT. COST OF DOWELS AND TIE BARS SHALL BE INCIDENTAL TO ITEM 610018 - PORTLAND CEMENT CONCRETE MASONRY, APPROACH SLAB, CLASS D.
4. MOMENT SLABS SHALL BE HAUNCHED TO REST ON TOP OF SLEEPER SLAB FOOTING.
5. TRANSVERSE JOINTS BETWEEN MOMENT SLAB SEGMENTS SHALL ALIGN WITH TRANSVERSE JOINTS IN THE CONCRETE PAVEMENT. FOR CONCRETE PAVEMENT DETAILS, REFER TO DWGS. CP-02 & CP-03 FOR DETAILS.
6. FOR MSE WALL TYPICAL SECTION, SEE DWG. RD-05.
7. FOR LIGHT BRACKET SUPPORT DETAILS AND REINFORCEMENT, SEE DWG. RD-14 AND PA-04.

UNOFFICIAL WEBSITE COPY

N:\31987-004\Contract_Ramp_D\CADD\Bridge\BR1-750_RD12.dgn
8/23/2019 4:33:08 PM

ADDENDA / REVISIONS	SCALE AS NOTED	REHABILITATION OF I-95, 2ND STREET ON-RAMP IMPROVEMENTS	CONTRACT T201907402	BRIDGE NO. 1 750 6148	MSE WALL MOMENT SLAB REINFORCEMENT PLAN – 7	RD-12
			COUNTY NEW CASTLE	DESIGNED BY: D. NIZAMOFF		SECTION WRA
				CHECKED BY: W. GESCHREI		SHEET NO. 195

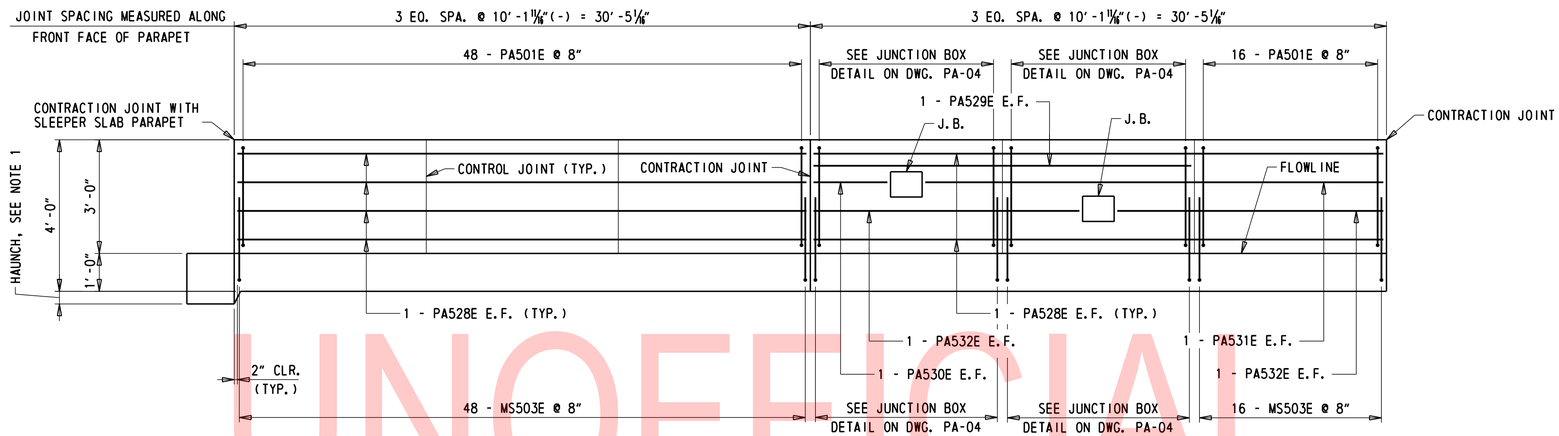

PARAPET REINFORCEMENT DEVELOPED ELEVATION - MSE WALL B WEST PARAPET

HORIZONTAL - 1/4" = 1'-0"
VERTICAL - 1/2" = 1'-0"

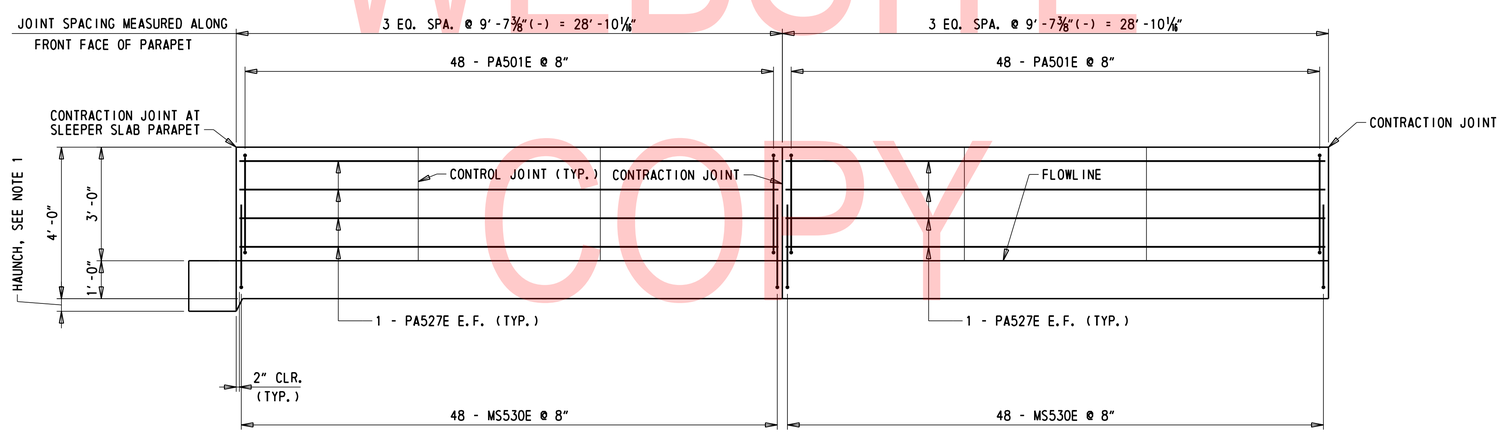

PARAPET REINFORCEMENT DEVELOPED ELEVATION - MSE WALL B EAST PARAPET

HORIZONTAL - 1/4" = 1'-0"
VERTICAL - 1/2" = 1'-0"

NOTES:

1. MOMENT SLABS SHALL BE HAUNCHED TO REST ON TOP OF SLEEPER SLAB FOOTING.

UNOFFICIAL WEBSITE COPY

ADDENDA / REVISIONS	SCALE AS NOTED	REHABILITATION OF I-95, 2ND STREET ON-RAMP IMPROVEMENTS	CONTRACT T201907402	BRIDGE NO. 1 750 6148	MSE WALL MOMENT SLAB REINFORCEMENT PLAN – 8	RD-13
			COUNTY NEW CASTLE	DESIGNED BY: D. NIZAMOFF		SECTION WRA
				CHECKED BY: W. GESCHREI		SHEET NO. 196

N:\31987-004\Contract_Ramp_D\CADD\Bridge\BRI-750_RD13.dgn
8/23/2019 4:33:08 PM

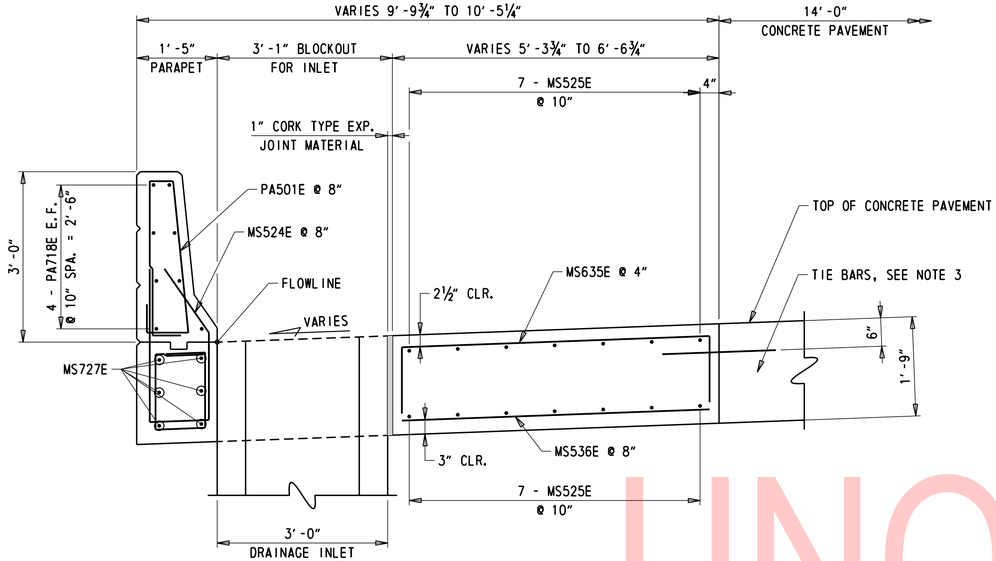

SECTION C-C

¾" = 1'-0"

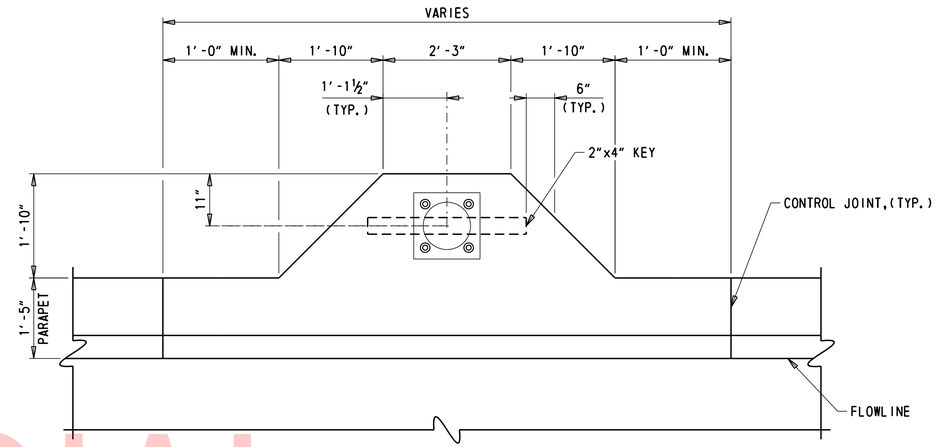

LIGHT BRACKET - PLAN

¾" = 1'-0"

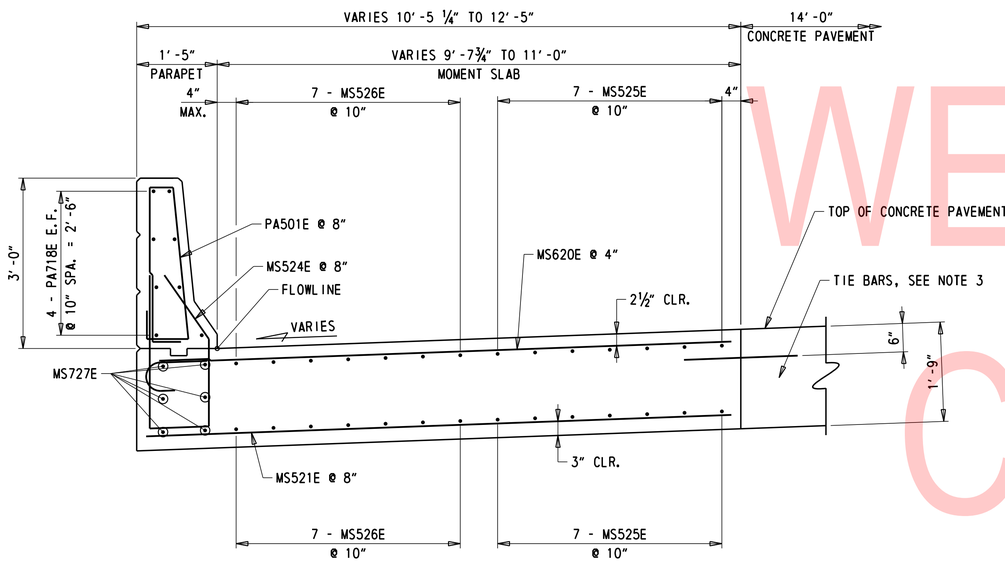

SECTION D-D

¾" = 1'-0"

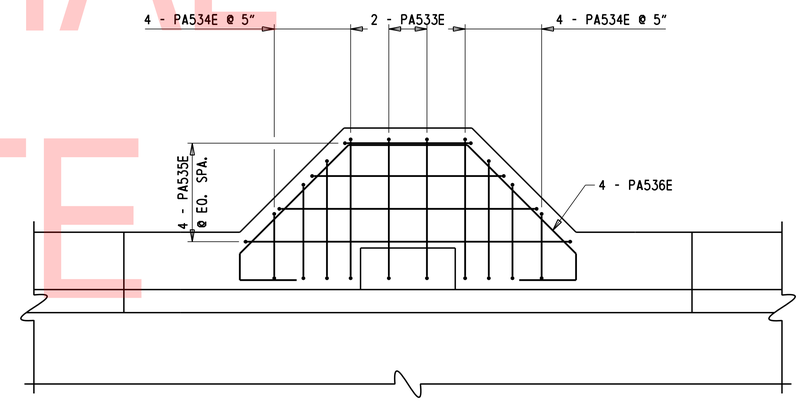

LIGHT BRACKET REINFORCEMENT - PLAN

¾" = 1'-0"

NOTE:

NORMAL PARAPET REINFORCING STEEL NOT SHOWN FOR CLARITY, SEE DWGS. PA-03 TO PA-04.

NOTES:

1. FOR SECTION CUT THRU LIGHT BRACKET AND ADDITIONAL REINFORCEMENT DETAILS, SEE DWGS. PA-03 AND PA-04.
2. FOR SECTIONS C-C AND D-D, SEE DWG. RD-08.
3. FOR DETAILS OF TIE BARS BETWEEN MOMENT SLABS AND CONCRETE PAVEMENT, SEE STANDARD NO. P-1, P.C.C. PAVEMENT. COST OF DOWELS WILL BE INCIDENTAL TO ITEM 610018 - PORTLAND CEMENT CONCRETE MASONRY, APPROACH SLAB, CLASS D.
4. PAYMENT FOR 1" CORK TYPE EXPANSION JOINT MATERIAL WILL BE INCIDENTAL TO ITEM 610018 PORTLAND CEMENT CONCRETE MASONRY, APPROACH SLAB, CLASS D.

UNOFFICIAL WEBSITE COPY

N:\31987-004\Contract_Ramp_D\CADD\Bridge\BR1-750_RD14.dgn
8/23/2019 4:33:09 PM

ADDENDA / REVISIONS	SCALE AS NOTED	REHABILITATION OF I-95, 2ND STREET ON-RAMP IMPROVEMENTS	CONTRACT T201907402	BRIDGE NO. 1 750 6148	MSE WALL MOMENT SLAB LIGHT AND INLET DETAILS	RD-14
			COUNTY NEW CASTLE	DESIGNED BY: D. NIZAMOFF		SECTION WRA
				CHECKED BY: W. GESCHREI		SHEET NO. 197

(1) ANY MARK NUMBER WITH SUFFIX 'E' DENOTES EPOXY COATED REINFORCING STEEL.

(2) ALL MARK 'LOCATION PREFIXES' SHALL CONSIST OF TWO LETTERS AND ARE AS FOLLOWS: AB = ABUTMENT, AS = APPROACH SLAB, BC = BOX CULVERT, BW = BACKWALL, CL = COLUMN, DK = DECK, DL = DOWEL, FT = FOOTING, HW = HEADWALL, MS = MISC. BARS, PA = PARAPET, PR = PIER, SC = SHEETPILE CAP, SS = SLEEPER SLAB, SL = SLAB, TW = TOEWALL, WL = WALL (UNIQUE LOCATION), WW = WINGWALL

SPECIFICATIONS					BENDING DIMENSIONS (FEET-INCHES /QUARTER INCH)										
QTY.	SIZE	LENGTH	MARK	TYPE	A	B	C	D	E	F/R	G	H	J	K	O
DECK															
165	4	33-6.0	DK401E	1	0-6.0	32-6.0					0-6.0		0-4.0		
165	4	32-6.0	DK402E	STR		32-6.0									
270	4	37-7.2	DK403E	STR		37-7.2									
170	5	5-8.1	DK504E	SP03		2-2.1	1-1.0	1-0.2	1-4.2			1-1.2		0-9.2	
330	6	7-4.0	DK605E	1	0-8.0	6-8.0							0-6.0		
2	5	6-5.2	DK506E	DE12	0-6.0	1-5.2	1-0.2	0-6.3	0-11.3	1-5.0	0-6.0	0-4.2		0-5.0	
168	5	5-11.1	DK507E	SP03		2-3.3	1-1.0	1-2.0	1-4.2			1-1.2		0-9.2	
PARAPET															
338	5	7-6.3	PA501E	SP04	0-6.0	0-8.0	2-9.0	0-4.3	2-9.0		0-6.0	2-9.0		0-3.1	
46	5	29-8.0	PA502E	STR		29-8.0									
16	5	19-2.0	PA503E	STR		19-2.0									
2	5	9-8.0	PA504E	STR		9-8.0									
2	5	3-10.0	PA505E	STR		3-10.0									
2	5	4-11.0	PA506E	DE06		2-10.0	0-5.0	1-1.0			0-7.0		1-0.3		0-6.1
2	5	24-8.0	PA515E	STR		24-8.0									
ABUTMENT															
136	5	7-6.0	FT501E	17		2-6.0	2-6.0	2-6.0							
24	7	32-4.0	FT702E	STR		32-4.0									
4	8	32-4.0	FT803E	STR		32-4.0									
68	4	5-6.0	AB401E	17		2-6.0	3-0.0								
128	5	7-0.0	AB502E	17		2-3.0	2-6.0	2-3.0							
48	6	7-3.2	AB603E	14		4-8.2	1-2.0			1-5.0		3-4.0		3-4.0	4-5.3
48	6	6-9.0	AB604E	14		4-1.2	1-2.2			1-5.0		3-6.1		3-6.1	4-8.3
64	7	18-2.2	AB705E	STR		18-2.2									

SPECIFICATIONS					BENDING DIMENSIONS (FEET-INCHES /QUARTER INCH)										
QTY.	SIZE	LENGTH	MARK	TYPE	A	B	C	D	E	F/R	G	H	J	K	O
APPROACH SLAB															
136	5	6-10.2	AS501E	17		3-0.0	0-10.2	3-0.0							
76	5	6-9.0	AS502E	17		3-0.0	0-9.0	3-0.0							
134	8	17-6.0	AS803E	STR		17-6.0									
68	5	17-6.0	AS504E	STR		17-6.0									
38	5	32-4.0	AS505E	STR		32-4.0									
38	6	32-4.0	AS606E	STR		32-4.0									
112	5	5-5.2	AS507E	SP03		2-1.0	1-1.0	1-3.2	1-0.0				0-9.3	0-6.2	
112	5	7-6.3	PA501E	SP04	0-6.0	0-8.0	2-9.0	0-4.3	2-9.0		0-6.0	2-9.0		0-3.1	
32	5	17-8.0	PA513E	STR		17-8.0									
SLEEPER SLAB															
54	5	32-4.0	SS501E	STR		32-4.0									
136	8	7-0.0	SS802E	STR		7-0.0									
68	5	7-8.0	SS503E	T1	0-5.2	1-6.0	1-10.0	1-6.0	1-10.0		0-5.2				
32	5	7-10.1	SS504E	SP03		3-5.2	1-1.0	2-2.3	1-1.0			0-11.2		0-7.3	
32	5	7-6.3	PA501E	SP04	0-6.0	0-8.0	2-9.0	0-4.3	2-9.0		0-6.0	2-9.0		0-3.1	
32	5	4-2.0	PA514E	STR		4-2.0									

SPECIFICATIONS					BENDING DIMENSIONS (FEET-INCHES /QUARTER INCH)										
QTY.	SIZE	LENGTH	MARK	TYPE	A	B	C	D	E	F/R	G	H	J	K	O
MOMENT SLABS - WALL A															
66	6	11-9.0	MS601E	1	0-8.0	11-1.0							0-6.0		
34	5	11-1.0	MS502E	STR		11-1.0									
72	5	5-6.1	MS503E	SP03		2-1.1	1-1.0	0-11.2	1-4.2			1-1.2		0-9.2	
42	5	24-1.0	MS504E	STR		24-1.0									
66	6	7-9.0	MS605E	1	0-8.0	7-1.0							0-6.0		
34	5	7-1.0	MS506E	STR		7-1.0									
10	5	9-8.0	MS507E	STR		9-8.0									
10	5	5-8.0	MS508E	STR		5-8.0									
8	5	21-7.0	MS509E	STR		21-7.0									
2	5	5-8.2	MS510E	DE12	0-6.0	1-5.2	0-8.1	0-6.3	0-11.3	1-0.1	0-6.0	0-4.2		0-5.0	
70	5	7-6.3	PA501E	SP04	0-6.0	0-8.0	2-9.0	0-4.3	2-9.0		0-6.0	2-9.0		0-3.1	
2	5	4-11.0	PA506E	DE06		2-10.0	0-5.0	1-1.0			0-7.0	2-10.0	1-0.3		0-6.1
12	5	21-7.0	PA507E	STR		21-7.0									
2	5	10-7.2	PA508E	STR		10-7.2									
2	5	6-3.3	PA509E	STR		6-3.3									
2	5	13-3.1	PA510E	STR		13-3.1									
2	5	17-3.1	PA511E	STR		17-3.1									
2	5	2-3.3	PA512E	STR		2-3.3									

UNOFFICIAL WEBSITE COPY

ASTM STANDARD ENGLISH REINFORCING BARS

BAR SIZE	NOMINAL DIMENSIONS: DIAMETER (INCHES)	AREA (INCHES²)	WEIGHT (LBS./FT.)	RECOMMENDED END HOOKS, APPLICABLE TO ALL GRADES: 180° HOOKS D	180° HOOKS A OR G	180° HOOKS J	90° HOOKS A OR G	STIRRUP AND TIE HOOKS, APPLICABLE TO ALL GRADES: 90° HOOK D	90° HOOK A OR G	135° HOOK A OR G	135° HOOK A OR G
3	0.375	0.110	0.376	2¼"	5"	3"	6"	1½"	4"	4"	2½"
4	0.500	0.200	0.668	3"	6"	4"	8"	2"	4½"	4½"	3"
5	0.625	0.310	1.043	3¾"	7"	5"	10"	2½"	6"	5½"	3¾"
6	0.750	0.440	1.502	4½"	8"	6"	1-0"	4½"	1-0"	8"	4½"
7	0.875	0.600	2.044	5¼"	10"	7"	1-2"	5¼"	1-2"	9"	5¼"
8	1.000	0.790	2.670	6"	11"	8"	1-4"	6"	1-4"	10½"	6"
9	1.128	1.000	3.400	9½"	1-3"	11¾"	1-7"				
10	1.270	1.270	4.303	10¾"	1-5"	1-1¼"	1-10"				
11	1.410	1.560	5.313	1-0"	1-7"	1-2¾"	2-0"				
14	1.693	2.250	7.650	1-6¼"	2-3"	1-9¾"	2-7"				
18	2.257	4.000	13.600	2-0"	3-0"	2-4½"	3-5"				

NOTES:

1. FIGURES SHOWN IN CIRCLES REPRESENT BAR BEND TYPES.
2. STANDARD BAR BENDS INCLUDE ONLY THOSE TYPES BELOW, INDICATED AS SUCH.
3. ALL DIMENSIONS OUT-TO-OUT, EXCEPT "A" AND "G" ON STD. 180° AND 135° HOOKS.
4. "J" DIMENSIONS ON 180° HOOKS TO BE SHOWN ONLY WHERE NECESSARY TO RESTRICT HOOK SIZE, OTHERWISE STANDARD 'ACI' HOOKS ARE TO BE USED.
5. WHERE "J" IS NOT SHOWN, "J" WILL BE KEPT EQUAL TO OR LESS THAN "H" ON TYPES 3, 5 AND 22. WHERE "J" CAN EXCEED "H", IT SHALL BE SHOWN.
6. "H" DIMENSIONS OF STIRRUPS TO BE SHOWN AS NEEDED TO FIT WITHIN THE CONCRETE.
7. UNLESS OTHERWISE NOTED, DIAMETER "D" IS THE SAME FOR ALL BENDS AND HOOKS ON A BAR (EXCEPT FOR BEND TYPES 11 AND 13).
8. WHERE SLOPE DIFFERS FROM 45° OFFSET, "H" AND "K" MUST BE SHOWN.
9. WHERE BARS ARE TO BE BENT MORE ACCURATELY THAN STANDARD BENDING TOLERANCES, BENDING DIMENSIONS REQUIRING CLOSER FABRICATION SHOULD HAVE LIMITS INDICATED.
10. FOR RECOMMENDED DIAMETER "D", OF BENDS, HOOKS, ETC., REFER TO TABLE ABOVE, 'CRSI' OR 'ACI' TABLES WHERE APPLICABLE AND REQUIRED.
11. TYPE S1-S6, S11, T1-T3 AND T6-T9 APPLICABLE TO BAR SIZES #3 THROUGH #8.

STANDARD BAR BENDS

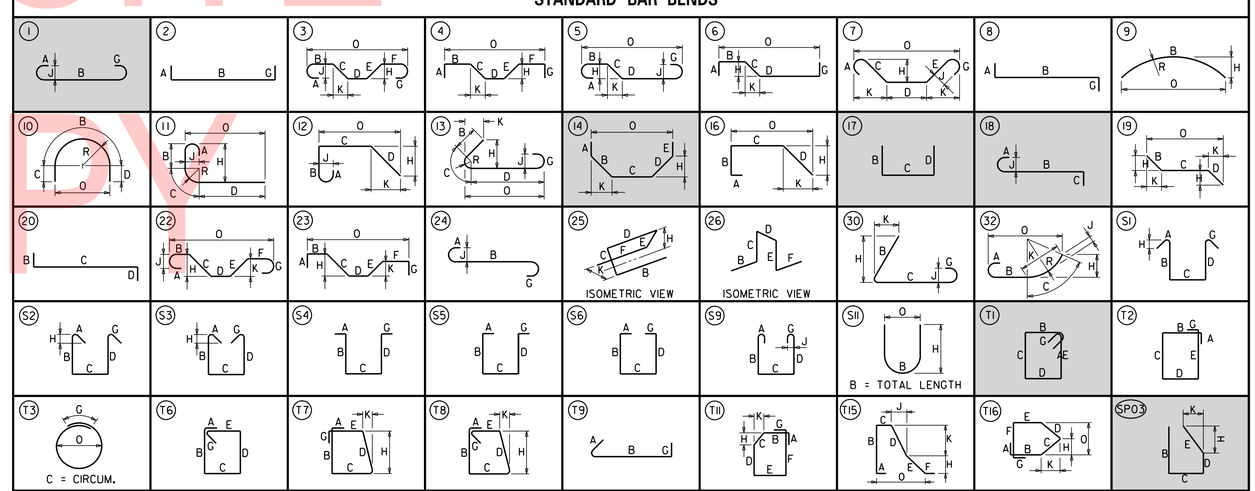

SPECIAL BAR BENDS

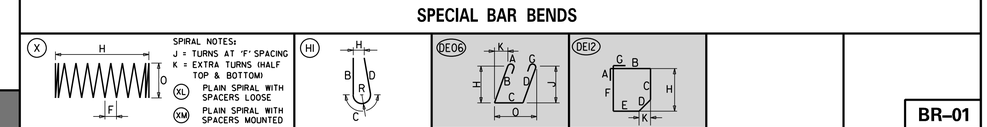

STIRRUP AND TIE HOOKS

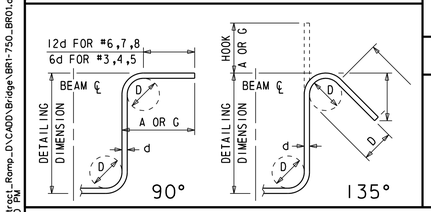

180° AND 90° END HOOKS

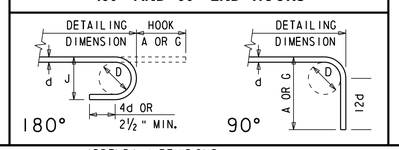

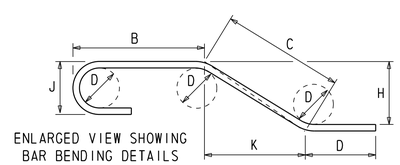

ENLARGED VIEW SHOWING BAR BENDING DETAILS

ADDENDA / REVISIONS

NOT TO SCALE

REHABILITATION OF I-95, 2ND STREET ON-RAMP IMPROVEMENTS

CONTRACT	BRIDGE NO.	1 750 6148
T201907402	DESIGNED BY: D. NIZAMOFF	
COUNTY		
NEW CASTLE	CHECKED BY: W. GESCHREI	

REINFORCEMENT SCHEDULE 1 OF 2

BR-01

SECTION WRA

SHEET NO. 198

N:\31987-004\Contract_Ramp_D\CADD\Bridge\BR1-750_BR01.dgn 8/23/2019 4:13:10 PM

① ANY MARK NUMBER WITH SUFFIX 'E' DENOTES EPOXY COATED REINFORCING STEEL.

② ALL MARK 'LOCATION PREFIXES' SHALL CONSIST OF TWO LETTERS AND ARE AS FOLLOWS: AB = ABUTMENT, AS = APPROACH SLAB, BC = BOX CULVERT, BW = BACKWALL, CL = COLUMN, DK = DECK, DL = DOWEL, FT = FOOTING, HW = HEADWALL, MS = MISC. BARS, PA = PARAPET, PR = PIER, SC = SHEETPILE CAP, SS = SLEEPER SLAB, SL = SLAB, TW = TOEWALL, WL = WALL (UNIQUE LOCATION), WW = WINGWALL

SPECIFICATIONS					BENDING DIMENSIONS (FEET-INCHES /QUARTER INCH)										
QTY.	SIZE	LENGTH	MARK	TYPE	A	B	C	D	E	F/R	G	H	J	K	O
MOMENT SLABS - WALL B															
938	6	11-9.0	MS601E	1	0-8.0	11-1.0							0-6.0		
474	5	11-1.0	MS502E	STR		11-1.0									
916	5	5-6.1	MS503E	SP03		2-1.1	1-1.0	0-11.2	1-4.2			1-1.2		0-9.2	
30	5	30-5.2	MS511E	STR		30-5.2									
56	5	29-8.0	MS512E	STR		29-8.0									
4	5	27-2.0	MS513E	STR		27-2.0									
570	6	12-9.0	MS615E	1	0-8.0	12-1.0							0-6.0		
288	5	12-1.0	MS516E	STR		12-1.0									
4	5	5-8.2	MS517E	DE12	0-6.0	1-5.2	0-8.1	0-6.3	0-11.3	1-0.1	0-6.0	0-4.2		0-5.0	
32	5	28-10.2	MS518E	STR		28-10.2									
160	5	28-7.0	MS519E	STR		28-7.0									
69••	6	10-9.2	MS620E	1	0-8.0	10-1.2							0-6.0		
		T0.				T0.									
		12-9.0			0-8.0	12-1.0							0-6.0		
			••1 SET OF 69												
35••	5	10-1.2	MS521E	STR		10-1.2									
		T0.				T0.									
		12-1.0				12-1.0									
			••1 SET OF 35												
9••	6	10-2.0	MS622E	1	0-8.0	9-6.0							0-6.0		
		T0.				T0.									
		10-4.2			0-8.0	9-8.2							0-6.0		
			••1 SET OF 9												
5••	5	9-6.0	MS523E	STR		9-6.0									
		T0.				T0.									
		9-8.2				9-8.2									
			••1 SET OF 5												
48	5	7-0.0	MS524E	SP03		2-9.2	1-1.0	1-9.0	1-4.2			1-1.2		0-9.2	
14	5	29-8.0	MS525E	STR		29-8.0									
14••	5	22-5.2	MS526E	STR		22-5.2									
		T0.				T0.									
		22-6.2				22-6.2									
			••2 SETS OF 7												
6	7	29-8.2	MS727E	STR		29-8.2									
2	5	11-2.0	MS528E	17	3-1.0	5-0.0	3-1.0								
8••	5	2-7.3	MS529E	STR		2-7.3									
		T0.				T0.									
		2-10.0				2-10.0									
			••2 SETS OF 4												

SPECIFICATIONS					BENDING DIMENSIONS (FEET-INCHES /QUARTER INCH)										
QTY.	SIZE	LENGTH	MARK	TYPE	A	B	C	D	E	F/R	G	H	J	K	O
MOMENT SLABS - WALL B (CONT.)															
89••	6	7-9.0	MS630E	1	0-8.0	7-1.0									
		T0.				T0.									
		9-11.3			0-8.0	9-3.3									
			••1 SET OF 89												
45••	5	7-1.0	MS531E	STR		7-1.0									
		T0.				T0.									
		9-5.3				9-5.3									
			••1 SET OF 45												
22••	5	29-8.0	MS532E	STR		29-8.0									
		T0.				T0.									
		29-9.1				29-9.1									
			••2 SETS OF 11												
4	5	27-2.2	MS533E	STR		27-2.2									
10	5	5-8.0	MS534E	STR		5-8.0									
13	6	7-7.0	MS635E	17		1-2.0	5-3.0	1-2.0							
95••	6	11-4.1	MS637E	1	0-8.0	10-8.1							0-6.0		
		T0.				T0.									
		12-8.1			0-8.0	12-0.1							0-6.0		
			••1 SET OF 95												
48••	5	10-8.1	MS538E	STR		10-8.1									
		T0.				T0.									
		12-0.1				12-0.1									
			••1 SET OF 48												
8	5	28-6.0	MS539E	STR		28-6.0									
16••	5	30-11.1	MS540E	STR		30-11.1									
		T0.				T0.									
		31-4.1				31-4.1									
			••2 SETS OF 8												
10••	5	9-1.0	MS541E	STR		9-1.0									
		T0.				T0.									
		9-3.0				9-3.0									
			••2 SETS OF 5												
20	5	9-8.0	MS542E	STR		9-8.0									
87••	6	12-8.0	MS643E	1	0-8.0	12-0.0							0-6.0		
		T0.				T0.									
		12-10.0			0-8.0	12-2.0							0-6.0		
			••1 SET OF 87												

SPECIFICATIONS					BENDING DIMENSIONS (FEET-INCHES /QUARTER INCH)										
QTY.	SIZE	LENGTH	MARK	TYPE	A	B	C	D	E	F/R	G	H	J	K	O
MOMENT SLABS - WALL B (CONT.)															
48••	5	12-0.0	MS544E	STR		12-0.0									
		T0.				T0.									
		12-2.0				12-2.0									
			••1 SET OF 48												
16••	5	28-7.1	MS545E	STR		28-7.1									
		T0.				T0.									
		29-0.2				29-0.2									
			••2 SETS OF 8												
921	5	7-6.3	PA501E	SP04	0-6.0	0-8.0	2-9.0	0-4.3	2-9.0		0-6.0	2-9.0		0-3.1	
8	5	29-8.0	PA502E	STR		29-8.0									
8	5	30-5.2	PA516E	STR		30-5.2									
8	5	28-10.2	PA517E	STR		28-10.2									
8	7	29-8.2	PA718E	STR		29-8.2									
8	5	27-2.2	PA519E	STR		27-2.2									
2	5	18-0.0	PA520E	STR		18-0.0									
4	5	27-2.0	PA521E	STR		27-2.0									
2	5	3-6.0	PA522E	STR		3-6.0									
2	5	21-9.0	PA523E	STR		21-9.0									
4	5	12-7.0	PA524E	STR		12-7.0									
40	5	28-7.0	PA525E	STR		28-7.0									
40	5	30-1.0	PA526E	STR		30-1.0									
16	5	28-6.0	PA527E	STR		28-6.0									
12	5	30-1.0	PA528E	STR		30-1.0									
2	5	19-11.1	PA529E	STR		19-11.1									
2	5	3-10.3	PA530E	STR		3-10.3									
2	5	24-2.1	PA531E	STR		24-2.1									
4	5	14-0.2	PA532E	STR		14-0.2									
4	5	9-10.1	PA533E	DE09	1-0.0	1-0.1	2-3.0	2-9.0			2-10.0	1-0.1	2-9.0	0-1.1	2-4.1
16••	5	8-3.2	PA534E	SP04	0-6.0	1-3.2	2-9.0	1-0.0	2-9.0			2-9.0		0-3.1	
		T0.				T0.		T0.							
		10-9.0			0-6.0	2-6.0	2-9.0	2-3.0	2-9.0			2-9.0		0-3.1	
			••4 SETS OF 4												
8••	5	11-0.2	PA535E	T1	0-5.2	2-3.3	2-9.0	2-3.3	2-9.0		0-5.2				
		T0.				T0.		T0.							
		18-2.0			0-5.2	5-10.2	2-9.0	5-10.2	2-9.0		0-5.2				
			••2 SETS OF 4												
8	5	10-4.0	PA536E	SP06	1-0.0	2-8.2	2-1.0	2-8.2	0-5.0	0-5.0	1-0.0	2-0.0	2-0.0	2-0.0	5-11.0

UNOFFICIAL WEBSITE COPY

ASTM STANDARD ENGLISH REINFORCING BARS

	NOMINAL DIMENSIONS			RECOMMENDED END HOOKS, APPLICABLE TO ALL GRADES				STIRRUP AND TIE HOOKS, APPLICABLE TO ALL GRADES			
				180° HOOKS		90° HOOKS		90° HOOK	135° HOOK		
BAR SIZE	DIAMETER (INCHES)	AREA (INCHES²)	WEIGHT (LBS./FT.)	D	A OR G	J	A OR G	D	A OR G	A OR G	A OR G
3	0.375	0.110	0.376	2¼"	5"	3"	6"	1½"	4"	4"	2½"
4	0.500	0.200	0.668	3"	6"	4"	8"	2"	4½"	4½"	3"
5	0.625	0.310	1.043	3¾"	7"	5"	10"	2½"	6"	5½"	3¾"
6	0.750	0.440	1.502	4½"	8"	6"	1-0"	4½"	1-0"	8"	4½"
7	0.875	0.600	2.044	5¼"	10"	7"	1-2"	5¼"	1-2"	9"	5¼"
8	1.000	0.790	2.670	6"	11"	8"	1-4"	6"	1-4"	10½"	6"
9	1.128	1.000	3.400	9½"	1-3"	11¾"	1-7"				
10	1.270	1.270	4.303	10¾"	1-5"	1-1¼"	1-10"				
11	1.410	1.560	5.313	1-0"	1-7"	1-2¾"	2-0"				
14	1.693	2.250	7.650	1-6¼"	2-3"	1-9¾"	2-7"				
18	2.257	4.000	13.600	2-0"	3-0"	2-4½"	3-5"				

NOTES:

1. FIGURES SHOWN IN CIRCLES REPRESENT BAR BEND TYPES.
2. STANDARD BAR BENDS INCLUDE ONLY THOSE TYPES BELOW, INDICATED AS SUCH.
3. ALL DIMENSIONS OUT-TO-OUT, EXCEPT "A" AND "G" ON STD. 180° AND 135° HOOKS.
4. "J" DIMENSIONS ON 180° HOOKS TO BE SHOWN ONLY WHERE NECESSARY TO RESTRICT HOOK SIZE, OTHERWISE STANDARD 'ACI' HOOKS ARE TO BE USED.
5. WHERE "J" IS NOT SHOWN, "J" WILL BE KEPT EQUAL TO OR LESS THAN "H" ON TYPES 3, 5 AND 22. WHERE "J" CAN EXCEED "H", IT SHALL BE SHOWN.
6. "H" DIMENSIONS OF STIRRUPS TO BE SHOWN AS NEEDED TO FIT WITHIN THE CONCRETE.
7. UNLESS OTHERWISE NOTED, DIAMETER "D" IS THE SAME FOR ALL BENDS AND HOOKS ON A BAR (EXCEPT FOR BEND TYPES 11 AND 13).
8. WHERE SLOPE DIFFERS FROM 45° OFFSET, "H" AND "K" MUST BE SHOWN.
9. WHERE BARS ARE TO BE BENT MORE ACCURATELY THAN STANDARD BENDING TOLERANCES, BENDING DIMENSIONS REQUIRING CLOSER FABRICATION SHOULD HAVE LIMITS INDICATED.
10. FOR RECOMMENDED DIAMETER "D", OF BENDS, HOOKS, ETC., REFER TO TABLE ABOVE, 'CRSI' OR 'ACI' TABLES WHERE APPLICABLE AND REQUIRED.
11. TYPE S1-S6, S11, T1-T3 AND T6-T9 APPLICABLE TO BAR SIZES #3 THROUGH #8.

STANDARD BAR BENDS

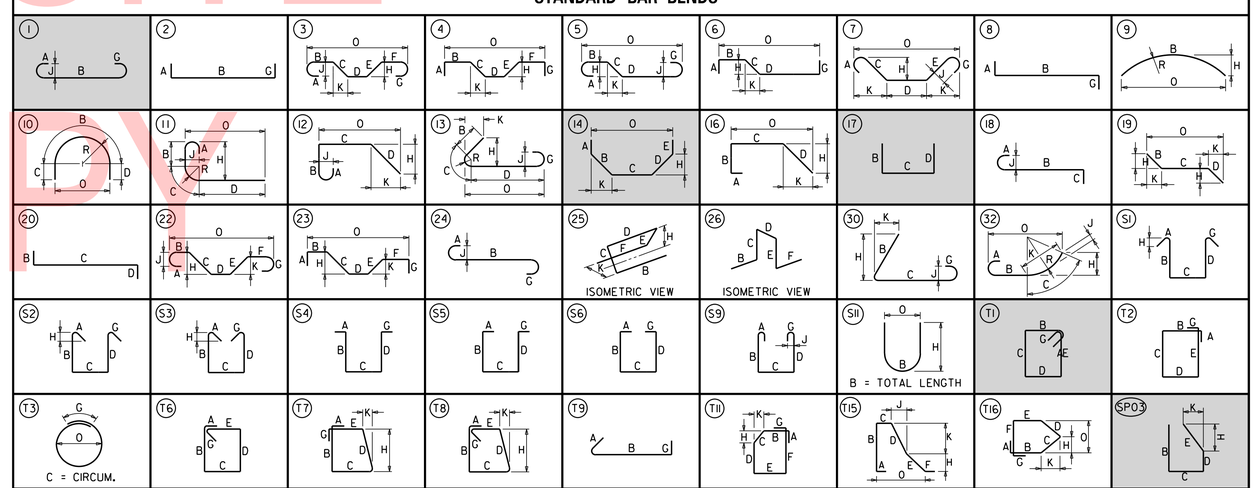

SPECIAL BAR BENDS

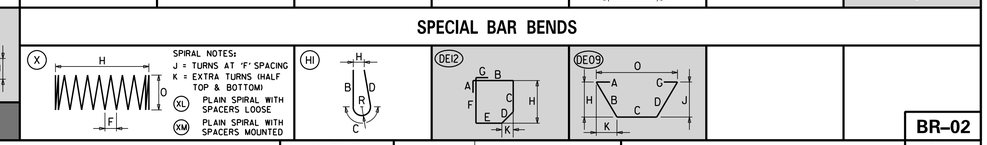

STIRRUP AND TIE HOOKS

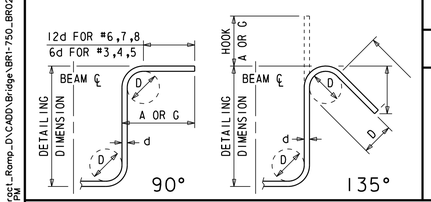

180° AND 90° END HOOKS

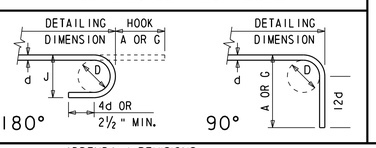

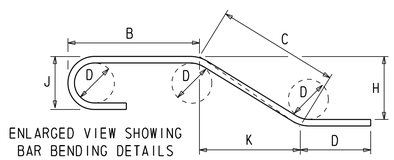

ADDENDA / REVISIONS

NOT TO SCALE

REHABILITATION OF I-95, 2ND STREET ON-RAMP IMPROVEMENTS

CONTRACT	BRIDGE NO.	1 750 6148
T201907402	DESIGNED BY: D. NIZAMOFF	
COUNTY	CHECKED BY: W. GESCHREI	
NEW CASTLE		

REINFORCEMENT SCHEDULE 2 OF 2

BR-02

SECTION: WRA

SHEET NO. 199

N:\31987-004\Contract_Ramp_D\CADD\Bridge\BR1-750_BR02.dgn 8/23/2019 4:53:11 PM

BORING: 17B-R6 | **DATE DRILLED:** 7/11/2017
STATION: 1305+15.00 | **OFFSET:** 108.87' LT | **ELEVATION:** 44.0' | **NORTHING:** 634051.0000 | **EASTING:** 615090.0000
COMMENTS: N/A

SAMPLE INFORMATION

NO.	DEPTH	BLOWS /6"	DESCRIPTION	CLASS /G.I.	REMARKS
1	0.0' 2.0'		MOIST BROWN FINE SANDY SILT W/SOME COARSE SAND, CLAY AND FINE GRAVEL.	A-4(0)	
2	2.0' 4.0'		NO SAMPLE		
3	4.0' 6.0'	5 10 15 12	MOIST VERY STIFF GRAY CLAYEY SILT W/SOME FINE TO COARSE SAND, TRACE OF FINE GRAVEL.	A-4(2)	
4	6.0' 8.0'	11 14 11 10	MOIST VERY STIFF GRAY CLAYEY FINE GRAVELLY SILT W/SOME FINE TO COARSE SAND.	A-4(1)	
5	8.0' 10.0'	3 15 18 16	MOIST DENSE BROWN COARSE SAND AND FINE GRAVEL W/SOME FINE SAND AND SILT.	A-1-b	
6	10.0' 12.0'	15 17 17 19	MOIST DENSE BROWN FINE GRAVELLY COARSE SAND W/SOME FINE SAND AND SILT.	A-1-b	
7	12.0' 14.0'	5 12 15 16	MOIST MEDIUM DENSE BROWN FINE GRAVEL AND COARSE SAND W/SOME FINE SAND AND SILT.	A-1-b	
8	14.0' 16.0'	8 17 19 7	MOIST DENSE BROWN COARSE TO FINE SAND AND FINE GRAVEL W/SOME SILT.	A-1-b	
9	16.0' 18.0'	3 3 6 9	SATURATED STIFF BROWN SILTY CLAY W/SOME FINE TO COARSE SAND, TRACE OF FINE GRAVEL.	A-6(9)	
10	18.0' 20.0'	3 6 6 7	SATURATED STIFF BROWN SILT W/SOME CLAY, TRACE OF FINE TO COARSE SAND AND FINE GRAVEL.	A-4(2)	
11	24.0' 26.0'	2 3 4 11	SATURATED FIRM GRAY FINE SANDY CLAY W/SOME COARSE SAND AND SILT, TRACE OF FINE GRAVEL.	A-6(4)	
12	26.0' 31.0'	5 10 15 12	SATURATED VERY STIFF GRAY FINE TO COARSE SANDY CLAY W/SOME SILT.	A-7-5(9)	
13	34.0' 36.0'	6 16 18 45	SATURATED HARD BROWN COARSE TO FINE SANDY CLAY W/SOME SILT, TRACE OF FINE GRAVEL.	A-7-6(3)	
R-1	37.1' 42.1'	1 2 3 4	GRANITE	A-7-6(3)	
R-2	42.1' 47.1'	3 8 14 18	GRANITE	A-7-6(3)	
	47.1' 72.0'		END BORING		

BORING: 17B-R7 | **DATE DRILLED:** 7/25/2017
STATION: 1305+96.97 | **OFFSET:** 118.05' LT | **ELEVATION:** 40.5' | **NORTHING:** 634138.0000 | **EASTING:** 615107.0000
COMMENTS: N/A

SAMPLE INFORMATION

NO.	DEPTH	BLOWS /6"	DESCRIPTION	CLASS /G.I.	REMARKS
1	0.0' 2.0'	4 5 3 3	WET FIRM BROWN SILT W/SOME FINE TO COARSE SAND, FINE GRAVEL AND CLAY.	A-4(0)	
2	2.0' 4.0'	9 11 8 7	WET VERY STIFF BROWN SILT W/SOME FINE TO COARSE SAND AND CLAY, TRACE OF FINE GRAVEL.	A-4(0)	
3	4.0' 6.0'	9 10 16 15	WET VERY STIFF BROWN SILT W/SOME FINE TO COARSE SAND AND CLAY, TRACE OF FINE GRAVEL.	A-4(1)	
4	6.0' 8.0'	16 28 50/4 15	WET HARD BROWN CLAYEY SILT W/SOME COARSE TO FINE SAND AND FINE GRAVEL.	A-4(1)	
5	8.0' 10.0'	11 16 20 15	WET DENSE BROWN SILTY FINE GRAVELW/SOME COARSE TO FINE SAND, TRACE OF CLAY.	A-2-4(0)	
6	10.0' 12.0'	11 14 15 16	WET MEDIUM DENSE BROWN COARSE SAND AND FINE GRAVEL W/SOME FINE SAND AND SILT.	A-1-b	
7	12.0' 14.0'	5 6 6 7	WET STIFF BROWN CLAYEY COARSE SANDY FINE GRAVELLY SILT W/SOME FINE SAND.	A-4(0)	
8	14.0' 16.0'	5 6 7 9	WET CLAYEY SILT W/TRACE FINE TO COARSE SAND.	A-4(7)	

BORING: 17B-R7 CONT.

SAMPLE INFORMATION

NO.	DEPTH	BLOWS /6"	DESCRIPTION	CLASS /G.I.	REMARKS
9	16.0' 18.0'	6 8 11 14	WET VERY STIFF BROWN CLAYEY SILT W/SOME FINE SAND, TRACE OF COARSE SAND.	A-4(8)	
U-1	18.0' 20.0'		NO RECOVERY		
10	20.0' 22.0'	13 12 14 16	WET MEDIUM DENSE BROWN COARSE TO FINE SAND AND FINE GRAVEL W/SOME SILT.	A-6(7)	
11	24.0' 26.0'	9 16 50/4	WET VERY DENSE BROWN CLAYEY FINE TO COARSE SAND AND FINE GRAVEL W/SOME SILT.	A-2-6(0)	
12	29.0' 31.0'	9 8 11 22	WET VERY STIFF BROWN FINE TO COARSE SANDY CLAY W/SOME FINE GRAVEL AND SILT.	A-6(0)	
13	34.0' 36.0'	25 25 50/4	WET VERY DENSE BROWN SILTY FINE TO COARSE SAND W/TRACE FINE GRAVEL.	A-2-4(0)	
	36.0' 72.0'		END BORING		

BORING: 17B-R8 | **DATE DRILLED:** 7/26/2017
STATION: 1307+32.57 | **OFFSET:** 32.42' LT | **ELEVATION:** 32.5' | **NORTHING:** 634239.0000 | **EASTING:** 615239.0000
COMMENTS: N/A

9

SAMPLE INFORMATION

NO.	DEPTH	BLOWS /6"	DESCRIPTION	CLASS /G.I.	REMARKS
1 10	0.0' 2.0'	8 5 6 4	MOIST STIFF GRAY FINE SANDY SILT W/SOME COARSE SAND, FINE GRAVEL AND CLAY.	A-4(0)	
2 11	2.0' 4.0'	6 6 5 5	MOIST STIFF GRAY SILT W/SOME FINE TO COARSE SAND, FINE GRAVEL AND CLAY.	A-4(1)	
3 12	4.0' 6.0'	16 50/4	MOIST HARD GRAY CLAYEY SILT W/SOME COARSE TO FINE SAND AND FINE GRAVEL.	A-4(3)	
4	6.0' 8.0'	6 6 7 7	WET STIFF GRAY SILTY CLAY W/SOME FINE TO COARSE SAND AND FINE GRAVEL.	A-6(6)	
5	8.0' 10.0'	3 3 4 4	SATURATED FIRM BROWN CLAY W/SOME COARSE TO FINE SAND AND SILT, TRACE OF FINE GRAVEL.	A-7-5(15)	
6	10.0' 12.0'	14 14 8 5	SATURATED VERY STIFF BROWN COARSE TO FINE SANDY CLAY W/SOME SILT.	A-7-5(1)	
7	12.0' 14.0'	6 7 8 8	SATURATED STIFF BROWN COARSE SANDY CLAY W/SOME FINE SAND AND SILT.	A-7-5(18)	
	14.0' 16.0'	6 14 14 5	SATURATED VERY STIFF BROWN COARSE SANDY CLAY W/SOME FINE SAND AND SILT.	A-7-5(9)	
	16.0' 18.0'	11 16 13 13	SATURATED VERY STIFF BROWN FINE TO COARSE SANDY SILT.	A-4(0)	
	18.0' 20.0'	8 10 7 14	SATURATED VERY STIFF BROWN COARSE SANDY CLAY W/SOME FINE SAND AND SILT.	A-7-5(15)	
	24.0' 26.0'	9 13 16 17	SATURATED STIFF GRAY FINE TO COARSE SANDY SILT.	A-5(0)	
	28.0' 30.0'	50/1	NO RECOVERY		
	30.0' 72.0'		END BORING		

BORING: 17B-R9 | **DATE DRILLED:** 7/27/2017
STATION: 1308+33.85 | **OFFSET:** 33.78' LT | **ELEVATION:** 28.2' | **NORTHING:** 634333.0000 | **EASTING:** 615282.0000
COMMENTS: N/A

SAMPLE INFORMATION

NO.	DEPTH	BLOWS /6"	DESCRIPTION	CLASS /G.I.	REMARKS
1	0.0' 2.0'	3 3 5 4	NO SIEVE ANALYSIS - INDICATION OF MOIST LOOSE BROWN SILTY FINE TO COARSE SAND.		
2	2.0' 4.0'	4 4 4 4	NO SIEVE ANALYSIS - INDICATION OF MOIST LOOSE BROWN SILTY FINE TO COARSE SAND.		
3	4.0' 6.0'	6 7 7 13	MOIST MEDIUM DENSE BROWN CLAYEY FINE GRAVEL W/SOME COARSE TO FINE SAND AND SILT.	A-2-4(0)	
4	6.0' 8.0'	8 9 10 13	MOIST VERY STIFF BROWN CLAYEY FINE GRAVELLY SILT W/SOME COARSE TO FINE SAND.	A-4(0)	
5	8.0' 10.0'	4 4 5 5	pH SAMPLE	A-4(0)	
6	10.0' 12.0'	7 6 4 3	WET LOOSE BROWN CLAYEY COARSE SAND AND FINE GRAVEL W/SOME FINE SAND AND SILT.	A-2-7(2)	
7	12.0' 14.0'	3 3 4 3	WET FIRM BROWN COARSE SANDY CLAY W/SOME FINE SAND, FINE GRAVEL AND SILT.	A-7-6(10)	
8	14.0' 16.0'	3 3 8 10	WET STIFF BROWN COARSE SANDY CLAY W/SOME FINE SAND, FINE GRAVEL AND SILT.	A-7-6(7)	
9	16.0' 18.0'	10 12 12 14	WET VERY STIFF BROWN COARSE SANDY CLAY W/SOME FINE SAND AND SILT, TRACE OF FINE GRAVEL.	A-7-6(12)	
10	18.0' 20.0'	9 12 17 18	WET VERY STIFF GRAY FINE SANDY CLAY W/SOME COARSE SAND AND SILT, TRACE OF FINE GRAVEL.	A-7-5(9)	
11	24.0' 26.0'	9 10 16 18	WET VERY STIFF GRAY FINE SANDY CLAY W/SOME COARSE SAND AND SILT.	A-7-5(8)	
12	28.0' 30.0'	17 28 50/3	WET HARD GRAY FINE TO COARSE SAND CLAY W/SOME SILT.	A-6(2)	
13	34.0' 36.0'	31 50/3	WET VERY DENSE GRAY CLAYEY FINE TO COARSE SAND W/SOME FINE GRAVEL AND SILT.	A-2-4(0)	
14	39.0' 41.0'		NO RECOVERY		
R-1	42.0' 47.0'		GRANITE		
R-2	47.0' 52.0'		GRANITE		
	52.0' 72.0'		END BORING		

UNOFFICIAL WEBSITE COPY

NOTES:

1. STATIONS AND OFFSETS ARE SHOWN FROM THE CONSTRUCTION BASELINE I-95.

N:\31987-004\Contract_Ramp_D\CADD\Bridge\BR1-750_B001.dgn
8/23/2019 4:35:12 PM

DELAWARE DEPARTMENT OF TRANSPORTATION

ADDENDA / REVISIONS | ADDENDUMS / REVISIONS

NOT TO SCALE

REHABILITATION OF I-95, 2ND STREET ON-RAMP IMPROVEMENTS

CONTRACT	BRIDGE NO.	1 750 6148
T201907402	DESIGNED BY: D. NIZAMOFF	
COUNTY		
NEW CASTLE	CHECKED BY: W. GESCHREI	

SOIL BORINGS 1 OF 2

BO-01
SECTION WRA
SHEET NO. 200

BORING: 17B-R10 | **DATE DRILLED:** 7/31/2017
STATION: 1309+56.69 | **OFFSET:** 44.39' LT | **ELEVATION:** 26.0' | **NORTHING:** 634447.0000 | **EASTING:** 615329.0000
COMMENTS: N/A

SAMPLE INFORMATION					
NO.	DEPTH	BLOWS /6"	DESCRIPTION	CLASS /G.I.	REMARKS
1	0.0' 2.0'		MOIST GRAY FINE GRAVEL W/SOME COARSE SAND AND SILT, TRACE OF FINE SAND.	A-1-b	
2	2.0' 4.0'	4 4 3 4	MOIST LOOSE BROWN CLAYEY COARSE TO FINE SAND W/SOME SILT, TRACE OF FINE GRAVEL.		
3	4.0' 6.0'	2 1 1 2	pH SAMPLE		
4	6.0' 8.0'	2 3 3 2	MOIST LOOSE BROWN CLAYEY FINE GRAVEL W/ SOME COARSE TO FINE SAND AND SILT.	A-2-4(0)	
5	8.0' 10.0'	4 3 6 5	WET STIFF BROWN COARSE SANDY FINE GRAVELLY CLAY W/SOME SILT, TRACE OF FINE SAND.	A-7-5(10)	
6	10.0' 12.0'	11 10 11 11	SATURATED VERY STIFF BROWN COARSE SANDY CLAY W/SOME FINE SAND AND SILT, TRACE OF FINE GRAVEL.	A-7-5(14)	
7	12.0' 14.0'	3 4 7 6	SATURATED STIFF BROWN COARSE SANDY FINE GRAVELLY CLAY W/SOME SILT, TRACE OF FINE SAND.	S-7-5(9)	
8	14.0' 16.0'	3 8 13 9	SATURATED VERY STIFF BROWN FINE GRAVELLY CLAY W/SOME COARSE SAND AND SILT, TRACE OF FINE SAND.	A-7-5(9)	
9	16.0' 18.0'	11 13 20 18	SATURATED DENSE BROWN CLAYEY COARSE TO FINE SAND W/SOME FINE GRAVEL AND SILT.	A-2-7(2)	
10	18.0' 20.0'	13 50/2	SATURATED HARD GRAY COARSE TO FINE SANDY CLAY W/SOME SILT AND FINE GRAVEL.	A-6(1)	
R-1	22.5' 27.5'		GRANITE		
R-2	27.5' 32.5'		GRANITE		
	32.5' 72.0'		END BORING		

BORING: 17B-R11 | **DATE DRILLED:** 8/1/2017
STATION: 1311+30.70 | **OFFSET:** 34.10' LT | **ELEVATION:** 26.9' | **NORTHING:** 634596.0000 | **EASTING:** 615419.0000
COMMENTS: N/A

SAMPLE INFORMATION					
NO.	DEPTH	BLOWS /6"	DESCRIPTION	CLASS /G.I.	REMARKS
1	0.0' 2.0'		WET GRAY FINE GRAVELLY CLAY W/SOME COARSE SAND AND SILT, TRACE OF FINE SAND.	A-7-6(8)	
2	2.0' 4.0'	11 12 12 14	WET MEDIUM DENSE BROWN SILTY COARSE SANDY FINE GRAVEL W/SOME FINE SAND.	A-1-b	
3	4.0' 6.0'	9 13 15 9	WET VERY STIFF BROWN COARSE TO FINE SANDY CLAY W/SOME FINE GRAVEL AND SILT.	A-7-5(7)	
4	6.0' 8.0'	11 15 16 19	WET HARD BROWN FINE SANDY CLAY W/SOME COARSE SAND, FINE GRAVEL AND SILT.	A-7-5(7)	
5	8.0' 10.0'	9 13 15 9	WET VERY STIFF BROWN CLAY W/SOME FINE TO COARSE SAND, FINE GRAVEL AND SILT.	A-7-5(10)	
6	10.0' 12.0'	18 20 20 17	WET HARD BROWN FINE SANDY CLAY W/SOME SILT, TRACE OF COARSE SAND AND FINE GRAVEL.	A-7-6(7)	
7	12.0' 14.0'	8 8 9 8	WET VERY STIFF BROWN FINE SANDY CLAY W/ SOME COARSE SAND, FINE GRAVEL AND SILT.	A-7-6(6)	
8	14.0' 16.0'	4 10 13 10	WET VERY STIFF BROWN FINE SANDY CLAY W/ SOME COARSE SAND, FINE GRAVEL AND SILT.	A-7-5(3)	
9	16.0' 18.0'	16 18 20 18	WET HARD BROWN FINE TO COARSE SANDY CLAY W/SOME FINE GRAVEL AND SILT.	A-7-5(5)	
10	18.0' 20.0'	9 13 18 13	WET DENSE GRAY CLAYEY FINE GRAVEL W/SOME COARSE TO FINE SAND AND SILT.	A-2-7(2)	
11	24.0' 26.0'	9 16 19 20	SATURATED HARD GRAY COARSE TO FINE SANDY CLAY W/SOME SILT, TRACE OF FINE GRAVEL.	A-7-5(3)	
12	29.0' 31.0'	13 24 31 31	SATURATED VERY DENSE BROWN CLAYEY FINE TO COARSE SAND W/SOME SILT, TRACE OF FINE GRAVEL.	A-2-7(1)	
	31.0' 72.0'		END BORING		

UNOFFICIAL WEBSITE COPY

NOTES:
1. STATIONS AND OFFSETS ARE SHOWN FROM THE CONSTRUCTION BASELINE I-95.

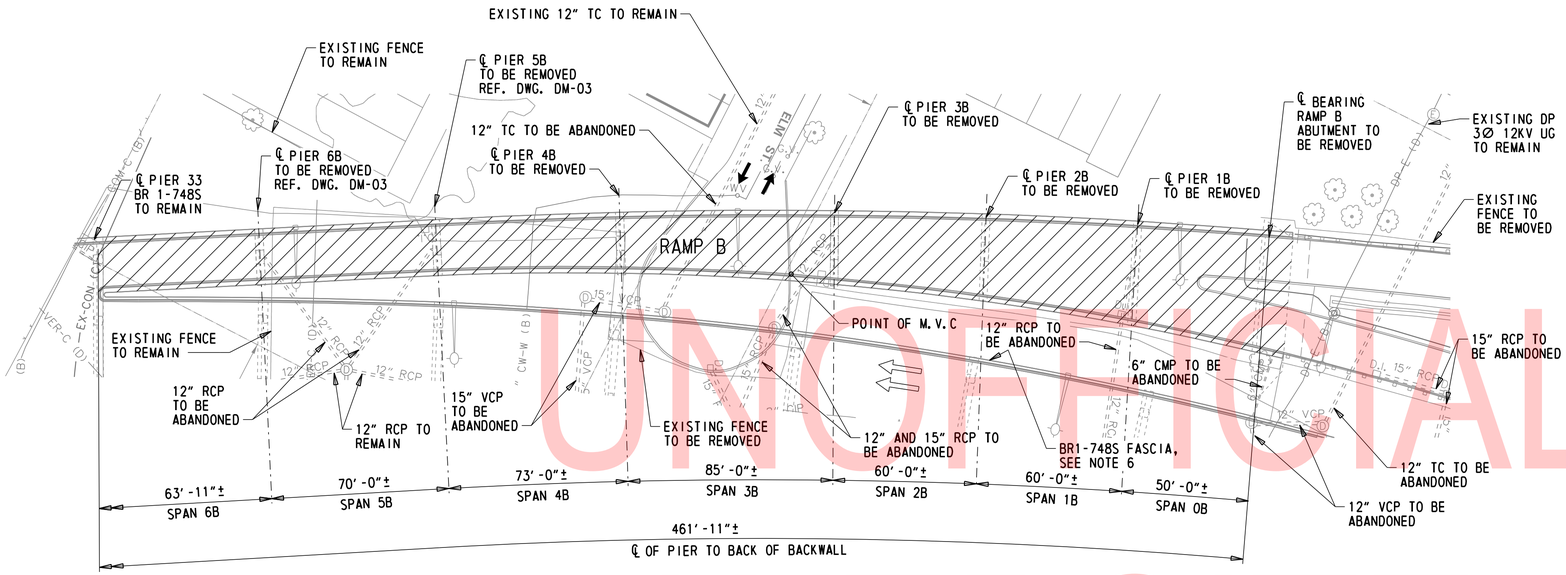

DEMOLITION PLAN

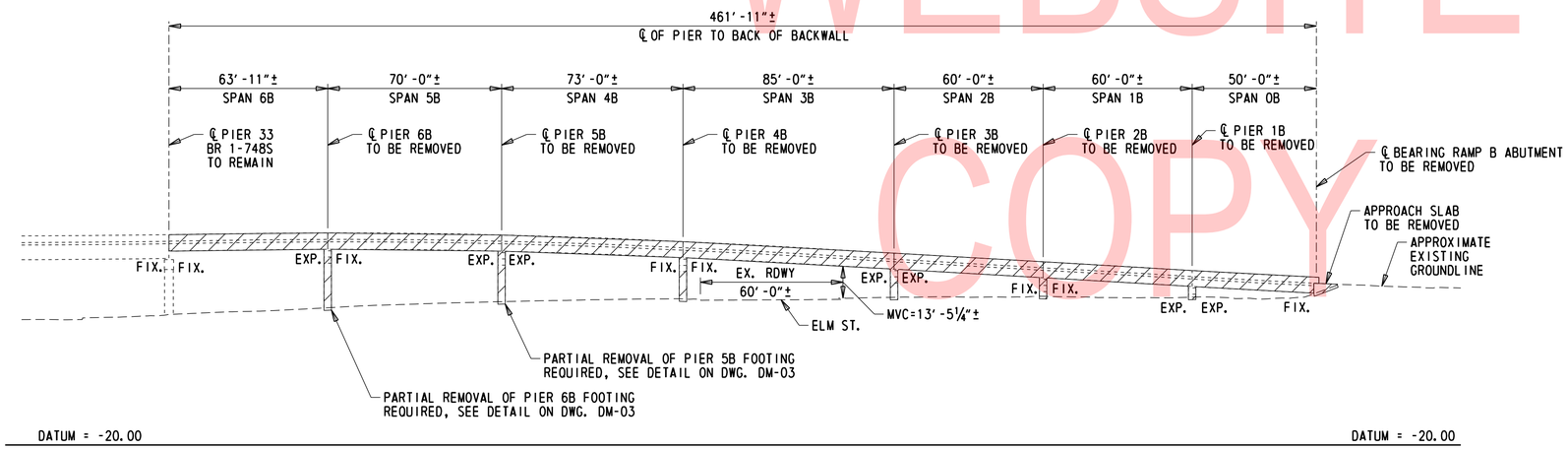

DEVELOPED ELEVATION

SECTION 200

1. REMOVAL OF STRUCTURES AND OBSTRUCTIONS:
   ITEMS TO BE REMOVED UNDER ITEM 211000 - REMOVAL OF STRUCTURES AND OBSTRUCTIONS ASSOCIATED WITH BRIDGE 1-758 SHALL INCLUDE, BUT NOT BE LIMITED TO, THE FOLLOWING:
   - ENTIRE BRIDGE TO 1'-0" BELOW GROUNDLINE
   - PARTIAL REMOVAL OF PIER FOOTINGS AND PILES AT PIERS 6B AND 5B (SEE DWG. DM-03)
   - ANY PORTIONS OF RAMP B ABUTMENT AND APPROACH SLAB REQUIRED TO FACILITATE CONSTRUCTION OF RAMP D
   - LIGHT POLES ATTACHED TO BRIDGE

MISCELLANEOUS

2. EXISTING CONDITIONS:
   ALL EXISTING DIMENSIONS AND ELEVATIONS SHOWN ARE BASED ON THE BEST AVAILABLE INFORMATION AND ARE APPROXIMATE ONLY. THE CONTRACTOR SHALL FIELD VERIFY ALL EXISTING DIMENSIONS, GEOMETRY, AND ELEVATIONS AS NECESSARY PRIOR TO ORDERING ANY MATERIALS AND COMMENCING CONSTRUCTION TO ENSURE PROPER FIT OF THE PROPOSED CONSTRUCTION. PAYMENT SHALL BE INCIDENTAL TO ITEM 763501 - CONSTRUCTION ENGINEERING.
3. ROADWAY CLEARANCES:
   CONTRACTOR SHALL COORDINATE WITH CITY OF WILMINGTON AND LOCAL RESIDENTS ON ELM ST. FOR CLOSURE OF CUL-DE-SAC DURING DEMOLITION OPERATIONS IN SPAN 3B.
4. UTILITIES:
   SEE UTILITY STATEMENT AND UTILITY RELOCATION PLAN SHEETS FOR FURTHER INFORMATION ON UTILITY COORDINATION.
5. ENVIRONMENTAL COMPLIANCE:
   ENVIRONMENTAL COMPLIANCE PLANS ARE NOT REQUIRED FOR THIS PROJECT. NO ENVIRONMENTAL RESOURCES ARE IMPACTED BY THE PROPOSED WORK.
6. EXISTING BRIDGE NO. 1-748S TO BE WIDENED. REFERENCE PLAN SHEETS FOR BRIDGE NO. 1 748S 059 ELSEWHERE; SEE INDEX OF SHEETS ON BR 1-748S DWG. PN-02.

INDEX OF BRIDGE 1-758 SHEETS

BR. SHEET Nº	BR. DWG. Nº	TABLE OF CONTENTS
199	DM-01	BRIDGE PROJECT NOTES AND DEMOLITION PLAN
200	DM-02	SPAN 0B PARTIAL DEMOLITION DETAILS
201	DM-03	PIERS 5B AND 6B PARTIAL DEMOLITION DETAILS
		TOTAL BRIDGE SHEETS: 3

QUANTITIES

ITEM Nº	ITEM TITLE	UNIT	QUANTITY
211000	REMOVAL OF STRUCTURES AND OBSTRUCTIONS	LS	1
604001	PROTECTIVE SHIELD	LS	1

LEGEND:

LIMITS OF REMOVAL BR 1-758: REMOVE ENTIRE SUPERSTRUCTURE AND PIERS AND ABUTMENT TO 1'-0" BELOW PROPOSED GROUNDLINE UNLESS NOTED OTHERWISE

NOTES:

1. MINIMUM VERTICAL CLEARANCE IS BASED ON 2013 NBIS INSPECTION REPORT.

UNOFFICIAL WEBSITE COPY

ADDENDA / REVISIONS

SCALE 0 30 60 90 FEET

REHABILITATION OF I-95, 2ND STREET ON-RAMP IMPROVEMENTS

CONTRACT	BRIDGE NO.	1 758 6143
T201907402	DESIGNED BY: D. NIZAMOFF	
COUNTY	CHECKED BY: W. GESCHREI	
NEW CASTLE		

BRIDGE PROJECT NOTES AND DEMOLITION PLAN

DM-01
SECTION WRA
SHEET NO. 202

N:\31987-004\Contract_Ramp_D\CADD\Bridge\BR1-758_DM01.dgn
8/23/2019 4:33:15 PM

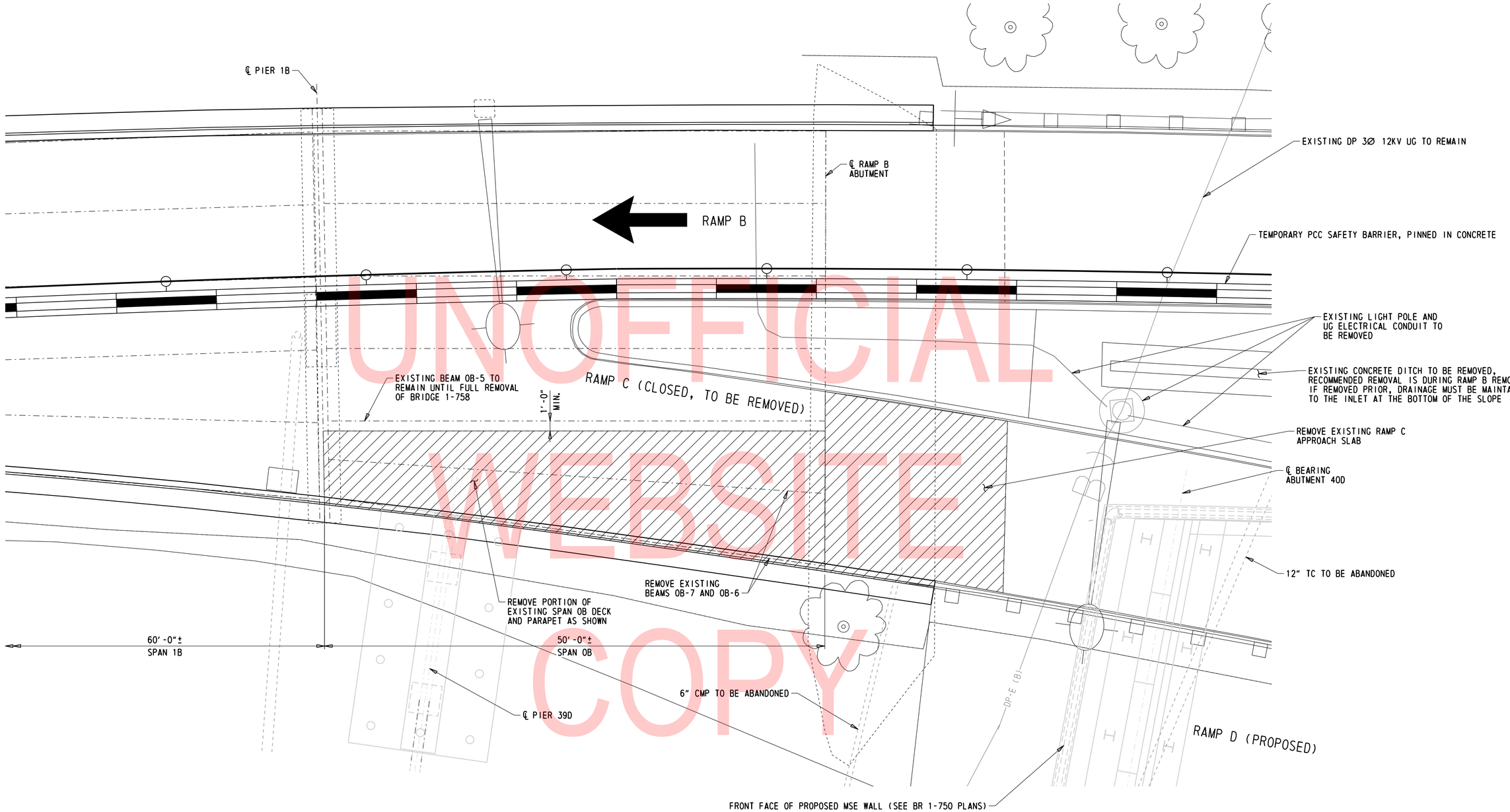

UNOFFICIAL WEBSITE COPY

PARTIAL DEMOLITION PLAN TO FACILITATE PIER 39D AND ABUTMENT 40D CONSTRUCTION

NOTES:

1. THE PURPOSE OF THIS PARTIAL DEMOLITION PLAN IS TO DEMONSTRATE A SUGGESTED PARTIAL DEMOLITION DETAIL FOR BR 1-758 THAT WILL ALLOW PIER 39D AND ABUTMENT 40D TO BE CONSTRUCTED AFTER RAMP C IS CLOSED WHILE MAINTAINING RAMP B OPEN TO TRAFFIC. THE CONTRACTOR MAY SUBMIT ALTERNATE DEMOLITION PLANS FOR REVIEW AND APPROVAL BY THE ENGINEER.
2. PAYMENT FOR THE COST OF PARTIAL REMOVAL WILL BE INCIDENTAL TO ITEM 211000 - REMOVAL OF STRUCTURES AND OBSTRUCTIONS.

DM-02

ADDENDA / REVISIONS	SCALE 0 5 10 15 FEET	REHABILITATION OF I-95, 2ND STREET ON-RAMP IMPROVEMENTS	CONTRACT T201907402	BRIDGE NO. 1 758 6143	SPAN 0B PARTIAL DEMOLITION DETAILS	SECTION WRA
			COUNTY NEW CASTLE	DESIGNED BY: D. NIZAMOFF		SHEET NO. 203
				CHECKED BY: W. GESCHREI		

N:\31987-004\Contract_Ramp_D\CADD\Bridge\BR1-758_DM03.dgn
8/23/2019 4:33:16 PM

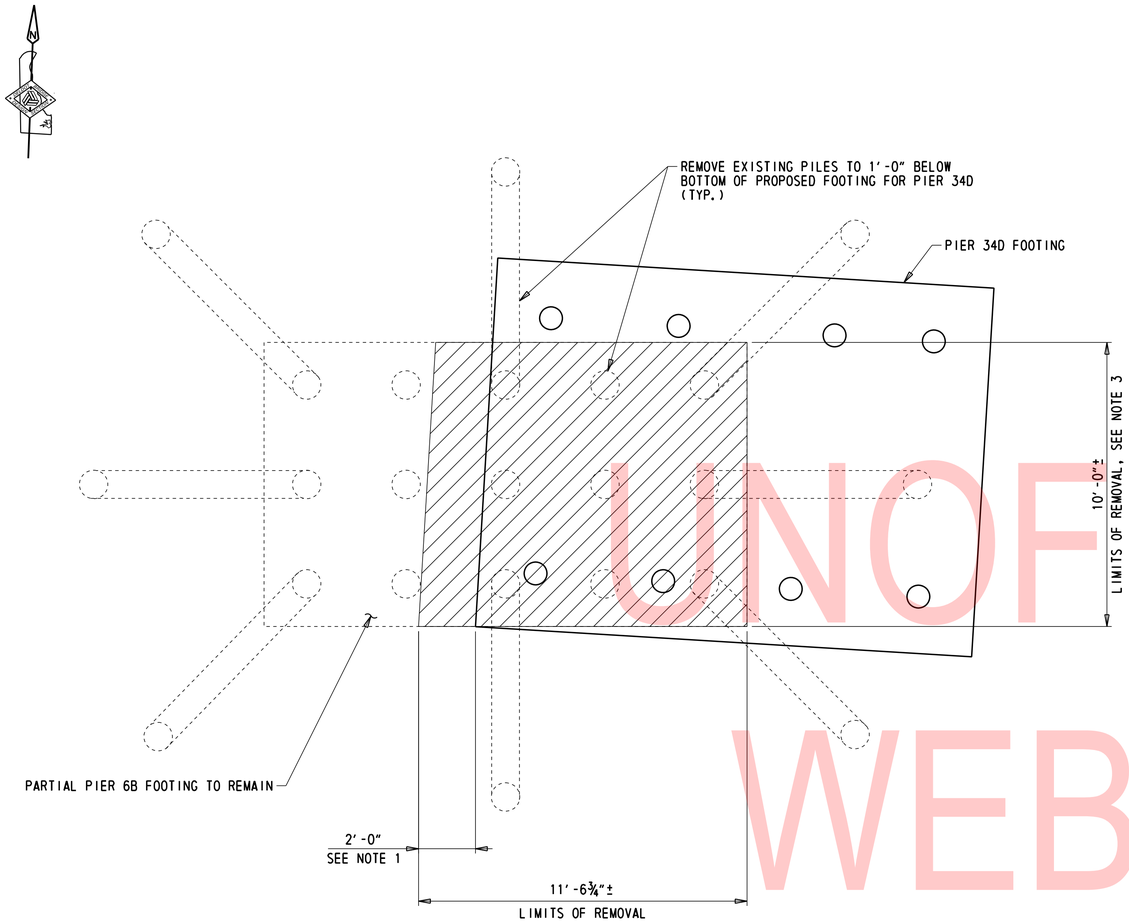

EXISTING PIER 6B PARTIAL FOOTING REMOVAL

⅜" = 1'-0"

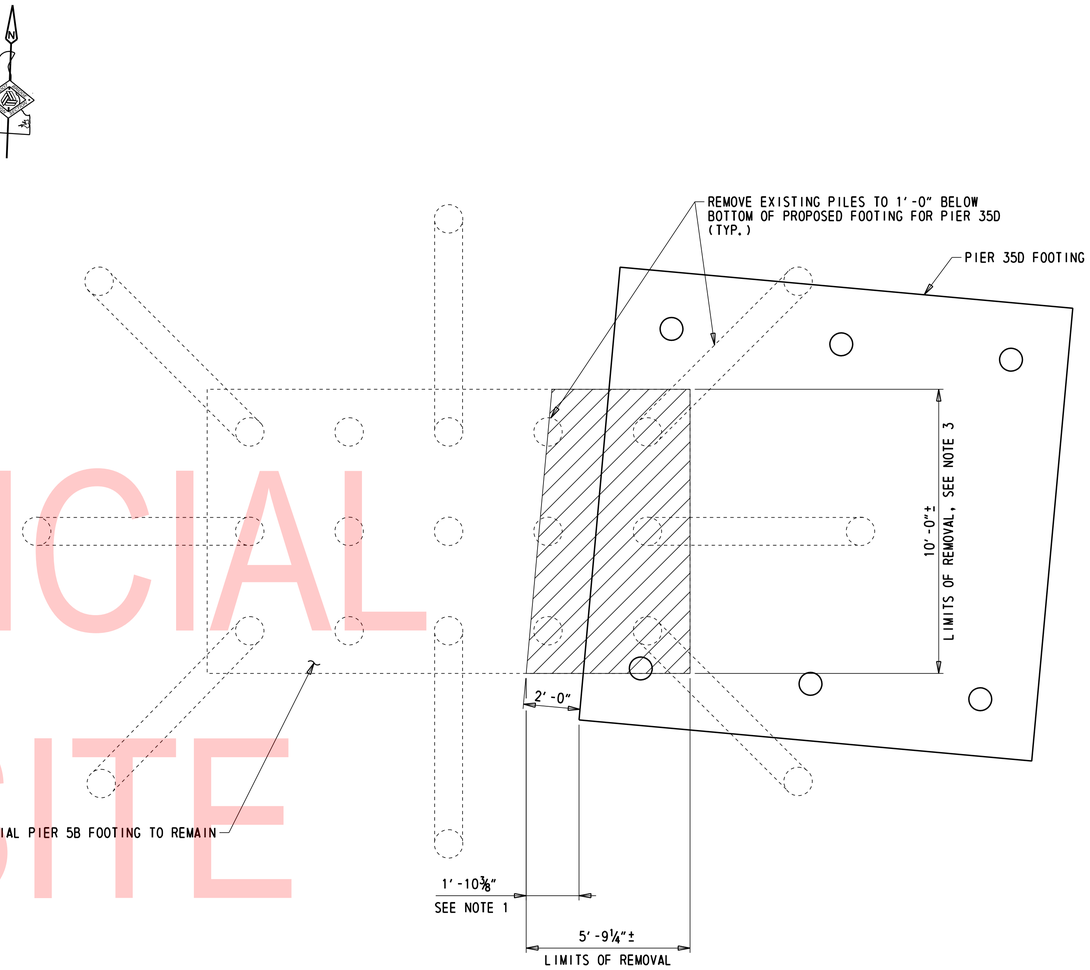

EXISTING PIER 5B PARTIAL FOOTING REMOVAL

⅜" = 1'-0"

UNOFFICIAL WEBSITE COPY

LEGEND:

LIMITS OF REMOVAL - ITEM 211000

PILE LEGEND:

PROPOSED MICROPILE

EXISTING 12" C.I.P. CONCRETE PILE

EXISTING 12" C.I.P. CONCRETE PILE, BATTERED 1H:4V

NOTES:

1. REMOVE FOOTING TO 2'-0" CLEAR OF PIER 34D AND PIER 35D FOOTINGS OR AS REQUIRED TO FACILITATE CONSTRUCTION OF FOOTING.
2. PARTIAL REMOVAL, EXCAVATION, AND ANY SUPPORT OF EXCAVATION FOR PIERS 5B AND 6B FOOTINGS WILL BE INCIDENTAL TO ITEM 211000 - REMOVAL OF STRUCTURES AND OBSTRUCTIONS.
3. EXISTING FOOTING THICKNESS AT PIERS 5B AND 6B IS 3'-0"±.

N:\31987-004\Contract_Ramp_D\CADD\Bridge\BR1-758_DM02.dgn
8/23/2019 4:53:16 PM

ADDENDA / REVISIONS	SCALE AS NOTED	REHABILITATION OF I-95, 2ND STREET ON-RAMP IMPROVEMENTS	CONTRACT T201907402	BRIDGE NO. 1 758 6143	PIERS 5B AND 6B PARTIAL DEMOLITION DETAILS	DM-03
			COUNTY NEW CASTLE	DESIGNED BY: D. NIZAMOFF		SECTION WRA
				CHECKED BY: W. GESCHREI		SHEET NO. 204

NOTES

1. THE OWNER OF THE SANITARY SEWER PIPES AND MANHOLES SHOWN ON THESE PLANS IS THE CITY OF WILMINGTON AND FROM HEREAFTER WILL BE ADDRESSED AS THE OWNER.

2. ALL WORK TO THE SANITARY SEWER SYSTEM SHALL BE IN ACCORDANCE WITH THE OWNER'S REQUIREMENTS, DEPARTMENT STANDARD SPECIFICATIONS SECTION 711, NEW CASTLE COUNTY STANDARD DETAILS, AND THESE CONTRACT DRAWINGS. IN THE CASE OF ANY DISCREPANCIES THESE CONTRACT DRAWINGS SHALL PREVAIL.

3. THE OWNER HAS COMPLETED CCTV INSPECTION OF ALL SEWERS TO BE RELOCATED AND FOUND NO EXISTING COMMERCIAL, INDUSTRIAL, AND/OR RESIDENTIAL SANITARY SEWER SERVICE CONNECTIONS; HOWEVER, THE CONTRACTOR IS RESPONSIBLE FOR CONFIRMING ANY POSSIBLE SANITARY SERVICE CONNECTIONS. ANY MODIFICATIONS TO SUCH SERVICES SHALL BE TO THE OWNER'S REQUIREMENTS. PAYMENT FOR SUCH MODIFICATIONS SHALL BE MADE BY CHANGE ORDER.

4. THE CONTRACTOR SHALL GUARANTEE THAT ALL WORKMANSHIP, MATERIALS, AND WORK PERFORMED UNDER THE CONTRACT, WILL BE IN ACCORDANCE WITH THE DRAWINGS, SPECIFICATIONS, AND OTHER CONTRACT DOCUMENTS. THIS GUARANTEE SHALL BE FOR A PERIOD OF ONE YEAR FROM AND AFTER THE DATE OF COMPLETION AND ACCEPTANCE OF THE WORK. THE CONTRACTOR SHALL REPAIR, CORRECT OR REPLACE AS REQUIRED, PROMPTLY AND WITHOUT CHARGE, ALL WORK, EQUIPMENT AND MATERIAL, OR PARTS THEREOF, WHICH FAIL TO MEET THE ABOVE GUARANTEE, OR WHICH IN ANY WAY FAIL TO COMPLY WITH OR FAIL TO BE IN ACCORDANCE WITH THE TERMS AND PROVISIONS AND REQUIREMENTS OF THE CONTRACT DURING SUCH ONE-YEAR PERIOD.

5. PRECAST SANITARY SEWER MANHOLES, RISERS, FRAMES AND COVERS, GRADE RINGS, STEPS AND DOGHOUSE MANHOLES SHALL BE IN ACCORDANCE WITH NEW CASTLE COUNTY STANDARD DETAILS AS SHOWN ON UR-04 AND UR-05.

   a. MANHOLE INTERIORS SHALL BE EPOXY COATED WITH TNEMEC, PREMA GLAZE 435 (BEIGE) WITH A MINIMUM DFT OF 30 MLS; CARBOLINE POLIBRID 705 (TAN) WITH A MINIMUM DFT OF 25 MILS; OR APPROVED EQUAL.

   b. MANHOLE EXTERIORS SHALL RECEIVE ONE HEAVY COAT OF COAL TAR EPOXY; CARBOLINE, BITUMASTIC 300M; TNEMEC 46H-413 HI-BUILD; OR APPROVED EQUAL. MINIMUM THICKNESS AND APPLICATION SHALL BE PER THE MANUFACTURER'S SPECIFICATIONS. COATING MAY BE SHOP APPLIED TO PRE-CAST UNITS. IF THE SHOP APPLIED COATING IS DAMAGED DURING CONSTRUCTION, A FIELD TOUCH-UP COAT SHALL BE APPLIED AND ALLOWED TO DRY, PER THE MANUFACTURERS RECOMMENDATIONS, PRIOR TO BACKFILLING.

   c. AN EXTERIOR JOINT SEAL SHALL BE INSTALLED AT ALL EXTERIOR MANHOLE JOINTS. EXTERIOR JOINT SEALER SHALL BE CRETEXWRAP EXTERIOR JOINT SEALER, MANUFACTURED BY CRETEX SPECIALTY PRODUCTS, INC. OR APPROVED EQUAL. EXTERIOR JOINT SEAL SHALL MEET OR EXCEED THE REQUIREMENTS OF ASTM C887, TYPE II, EXTERNAL JOINT SEALS.

   d. MANHOLE TESTING REQUIREMENTS:

      i. JOINT TESTS SHALL BE IN ACCORDANCE WITH ASTM D4161, LATEST REVISION

      ii. MANHOLES SHALL BE HYDROSTATICALLY OR VACCUM TESTED TO INSURE WATER TIGHTNESS. THIS TEST SHALL BE PERFORMED AFTER ALL RISERS HAVE BEEN CONNECTED AND CONNECTIONS SEALED.

      iii. COMPRESSIVE STRENGTH TESTS SHALL BE COMPLETED. CASTED SAMPLES TAKEN FROM THE SAME MATERIAL FROM WHICH THE RISER WAS MANUFACTURED MAY BE SUBSTITUTED FOR THE CUT SAMPLES IN THE COMPRESSIVE STRENGTH TESTS. THESE SAMPLES SHALL BE CASTED AT THE TIME THE RISER IS MANUFACTURED AND CURED IN THE SAME MANNER AS THE RISER. THERE SHALL BE A MINIMUM OF THREE (3) SAMPLES CASTED FOR EACH PIECE OF THE MANHOLE MANUFACTURED. THE CASTED SAMPLES SHALL BE TESTED IN ACCORDANCE WITH THE APPROPRIATE SECTION OF ASTM C579, LATEST REVISION.

6. SANITARY SEWER PIPE SHALL BE IN ACCORDANCE WITH THESE CONTRACT DRAWINGS.

   a. POLYVINYL CHLORIDE (PVC) SEWER SHALL BE SDR 26 AND MEET THE LATEST REQUIREMENTS OF ASTM D3034.

      i. JOINTS FOR PVC SEWER PIPE AND FITTINGS SHALL BE BELL AND SPIGOT WITH FLEXIBLE ELASTOMERIC O-RING GASKETS. GASKETS SHALL MEET THE REQUIREMENTS OF ASTM F477 AND BE PROVIDED BY THE PIPE MANUFACTURER.

      ii. PIPE AND FITTINGS SHALL BE ASSEMBLED IN ACCORDANCE WITH THE MANUFACTURER'S RECOMMENDATIONS.

      iii. ALL PVC PIPE AND FITTINGS SHALL BE MARKED WITH THE MATERIAL AND TYPE INFORMATION. ALL PVC PIPE AND FITTINGS SHALL BE MANUFACTURED BY IPEX, INC., JM EAGLE, INC., DIAMOND PLASTICS CORP., OR APPROVED EQUAL.

   b. DUCTILE IRON (DI) SEWER SHALL BE SPECIAL THICKNESS CLASS CL 52 AND MEET THE LATEST REQUIREMENTS OF AWWA C150 AND C110.

      i. PUSH-ON JOINTS FOR DI PIPE SHALL BE TYTON JOINT AS MANUFACTURED BY UNITED STATES PIPE AND FOUNDRY COMPANY, FASTITE JOINT AS MANUFACTURED BY AMERICAN CAST IRON PIPE COMPANY, OR APPROVED EQUAL. GASKETS FOR DI PIPE SHALL CONFORM TO AWWA C111 AND BE PROVIDED BY THE PIPE MANUFACTURER.

      ii. RESTRAINED JOINTS FOR DI PIPE SHALL BE MANUFACTURED IN ACCORDANCE WITH THE REQUIREMENTS OF AWWA C111, AND SHALL BE TR FLEX, AS MANUFACTURED BY UNITED STATES PIPE AND FOUNDRY COMPANY, FLEX-RING, AS MANUFACTURED BY AMERICAN CAST IRON PIPE COMPANY, OR APPROVED EQUAL.

      iii. PIPE AND FITTINGS SHALL BE ASSEMBLED IN ACCORDANCE WITH THE MANUFACTURER'S RECOMMENDATIONS.

      iv. ALL DI PIPE AND FITTINGS SHALL BE MARKED WITH THE MATERIAL AND TYPE INFORMATION. ALL DUCTILE IRON PIPE AND FITTINGS SHALL BE MANUFACTURED BY AMERICAN, US PIPE, OR APPROVED EQUAL.

   c. ALL SANITARY SEWER PIPE AND FITTINGS SHALL BE FREE FROM DEFECTS AND DEFECTIVE MATERIALS. PIPE AND FITTINGS FOUND TO BE DEFECTIVE, AS DETERMINED BY THE ENGINEER OR THE OWNER, SHALL BE REJECTED AND REPLACED BY THE CONTRACTOR AT NO ADDITIONAL COST TO THE DEPARTMENT OR OWNER.

   d. SANITARY SEWER PIPE AND FITTINGS SHALL BE TESTED FOR THE MAXIMUM AMOUNT OF ALLOWABLE LEAKAGE AS SPECIFIED BY THE OWNER IN THE PRESENCE OF THE ENGINEER AND THE REPRESENTATIVE OF THE OWNER.

      i. ALL SEWERS ABOVE THE GROUND WATER LINE SHALL BE TESTED BY THE LOW AIR PRESSURE METHOD. ALL SEWERS BELOW THE GROUND WATER LINE SHALL BE TESTED BY THE INFILTRATION METHOD. ALL SEWERS SHALL BE TESTED IN INDIVIDUAL SECTIONS.

      ii. ALL SEWERS SHALL BE CAREFULLY PLUGGED AND BACKFILLED TO A DEPTH NOT LESS THAN 2 FEET (0.6 METERS) ABOVE THE TOP OF THE PIPE PRIOR TO TESTING. WATER SHALL BE FURNISHED BY THE CONTRACTOR AND MAINTAINED AT SUCH LEVELS AS DIRECTED BY THE ENGINEER FOR A PERIOD OF AT LEAST TWENTY (20) HOURS IMMEDIATELY PRIOR TO THE TIME OF THE TEST AND DURING THE TEST. THE CONTRACTOR SHALL REPLACE OR REPAIR ALL DEFECTS ON SECTIONS OF SEWERS FAILING TO MEET THE REQUIREMENTS OF THESE TESTS AT NO ADDITIONAL COSTS TO THE DEPARTMENT OR OWNER.

      iii. THE CONTRACTOR SHALL FURNISH ALL EQUIPMENT AND PERSONNEL TO CONDUCT THE TESTS SPECIFIED HEREIN AND/OR ANY PROPOSED BY THE OWNER. THE CONTRACTOR SHALL NOT MAKE CONNECTIONS TO EXISTING SANITARY SEWERS UNTIL AFTER THE FINAL INSPECTION AND TESTS HAVE BEEN APPROVED. ALL MATERIAL AND LABOR REQUIRED FOR TESTS SHALL BE FURNISHED BY THE CONTRACTOR AND THE COSTS THEREOF INCLUDED IN THE PRICES BID ITEMS 71101 AND 711021 FOR INSTALLING SANITARY PIPE. WATER FOR LEAKAGE TEST SHALL BE FURNISHED BY THE CONTRACTOR.

7. 24" STEEL CASING PIPE FOR SANITARY SEWER SHALL BE IN ACCORDANCE WITH NEW CASTLE COUNTY STANDARD DETAIL SS-MISC-3 AS SHOWN ON UR-05. THE STEEL CASING PIPE SHALL BE INSTALLED USING GUIDED TUNNEL BORING WITH THE APPROVAL OF ENGINEER AND THE OWNER. TUNNELING METHODS SHALL BE IN ACCORDANCE WITH DEPARTMENT STANDARD SPECIFICATIONS AND SPECIFICATIONS SECTIONS 711503 AND 711504.

8. ALL UTILITY RELOCATIONS SHALL BE PERFORMED AS A FIRST ORDER OF WORK FOR THE CONTRACT IN ORDER TO FACILITATE THE INSTALLATION OF THE NEW FOUNDATION FOR THE WIDENING OF BRIDGE I-748S.

9. UTILITY TRENCH EXCAVATION AND BACKFILL SHALL BE IN ACCORDANCE WITH THE CONTRACT DRAWINGS, DELDOT STANDARD SPECIFICATIONS, AND NCC STANDARDS.

   a. THE LENGTH OF TRENCH OPENED AT ANY ONE TIME OR LOCATION IN ADVANCE OF THE COMPLETED PLACEMENT OF THE PIPE LINES SHALL BE NOT MORE THAN THREE PIPE LENGTHS OF TRENCH, UNLESS BY WRITTEN PERMISSION OF THE ENGINEER. THE ENGINEER SHALL BE EMPOWERED AT ANY TIME TO REQUIRE THE BACKFILLING OF OPEN TRENCHES OVER COMPLETED PIPE LINES IF, IN THEIR JUDGMENT, SUCH ACTION IS NECESSARY. THE CONTRACTOR SHALL HAVE NO CLAIM FOR EXTRA COMPENSATION, EVEN THOUGH TO ACCOMPLISH SAID FILLING, HE IS COMPELLED TEMPORARILY TO STOP EXCAVATION, OR OTHER WORK AT ANY PLACE.

   b. IF WORK IS STOPPED ON ANY TRENCH FOR ANY REASON EXCEPT BY ORDER OF THE ENGINEER, AND IF, IN THE OPINION OF THE ENGINEER, THE EXCAVATION IS LEFT OPEN FOR AN UNREASONABLE LENGTH OF TIME IN ADVANCE OF CONSTRUCTION, THE CONTRACTOR SHALL, IF SO DIRECTED, BACKFILL THE TRENCH AT NO ADDITIONAL COST TO THE ENGINEER, AND SHALL NOT AGAIN OPEN THE TRENCH UNTIL READY TO COMPLETE THE CONSTRUCTION THEREIN. IF THE CONTRACTOR REFUSES OR FAILS TO BACKFILL THE TRENCH COMPLETELY WITHIN TWENTY-FOUR (24) HOURS AFTER SAID NOTICE, THE ENGINEER SHALL BE AUTHORIZED TO HAVE THE WORK DONE BY OTHERS, AND THE ENGINEER SHALL CHARGE THE COST THEREOF TO THE CONTRACTOR AND RETAIN THE SAME OUT OF ANY MONIES DUE OR TO BECOME DUE TO THE CONTRACTOR UNDER THE CONTRACT.

   c. IN ROADWAY AREAS, LENGTH OF OPEN TRENCH SHALL BE LIMITED TO ONLY THAT LENGTH SUFFICIENT TO ADVANCE THE TRENCH BOX OR SHEETING AHEAD OF THE PIPE CONSTRUCTION OPERATION AND TO PROVIDE A MINIMUM SAFE WORKING DISTANCE BETWEEN THE BACKFILLING OPERATION AND THE PIPE CONSTRUCTION OPERATION.

   d. THE WIDTH, DEPTH, AND CLEARANCES OF TRENCHES SHALL BE EXCAVATED AS NECESSARY, AS SPECIFIED OR DIRECTED, AND AS MAY BE SHOWN IN THE STANDARD SPECIFICATIONS. THE CLEARANCE BETWEEN EACH FACE OF TRENCH AND EXTERNAL SURFACE OF BARREL OF PIPE OR HUBS SHALL NOT BE LESS THAN INDICATED. THE SIDES OF THE TRENCHES SHALL BE VERTICAL TO THE TOP OF THE PIPE AND PRACTICALLY PLUMB ABOVE THIS POINT AND UNDER NO CIRCUMSTANCES WILL THEY BE ALLOWED TO BE SLOPED EXCEPT WITH THE APPROVAL OF THE ENGINEER.

   e. IN CASE THE ENGINEER SHALL DIRECT THAT THE LOCATION OF A TRENCH BE CHANGED FROM THAT SHOWN ON THE CONTRACT DRAWINGS ON ACCOUNT OF THE PRESENCE OF AN OBSTRUCTION OR FROM OTHER CAUSE, OR IF CHANGED LOCATION SHALL BE AUTHORIZED UPON THE CONTRACTOR'S REQUEST, THE CONTRACTOR SHALL NOT BE ENTITLED TO EXTRA COMPENSATION OR TO A CLAIM FOR DAMAGE PROVIDED THAT THE CHANGE IS MADE BEFORE THE EXCAVATION IS BEGUN.

   f. NO TRENCHES ARE TO BE LEFT OPEN AFTER WORKING HOURS. TRENCHES SHALL BE BACKFILLED OR PLATED AT THE END OF EACH WORKING DAY IN SUCH A MANNER TO SAFELY SECURE THE WORK SITE AND AS TO NOT IMPEDE PEDESTRIANS OR VEHICLES.

10. EXCAVATION OF TUNNEL PITS SHALL BE IN ACCORDANCE WITH THE CONTRACT DRAWINGS, DELDOT STANDARD SPECIFICATIONS, AND NCC STANDARDS. TUNNEL PITS SHALL BE PROTECTED BY CHAIN LINK FENCING IN ACCORDANCE WITH SECTION 727548 - PORTABLE CHAIN LINK FENCE, AND SECURED AT THE END OF EACH WORKING DAY.

UNOFFICIAL WEBSITE COPY

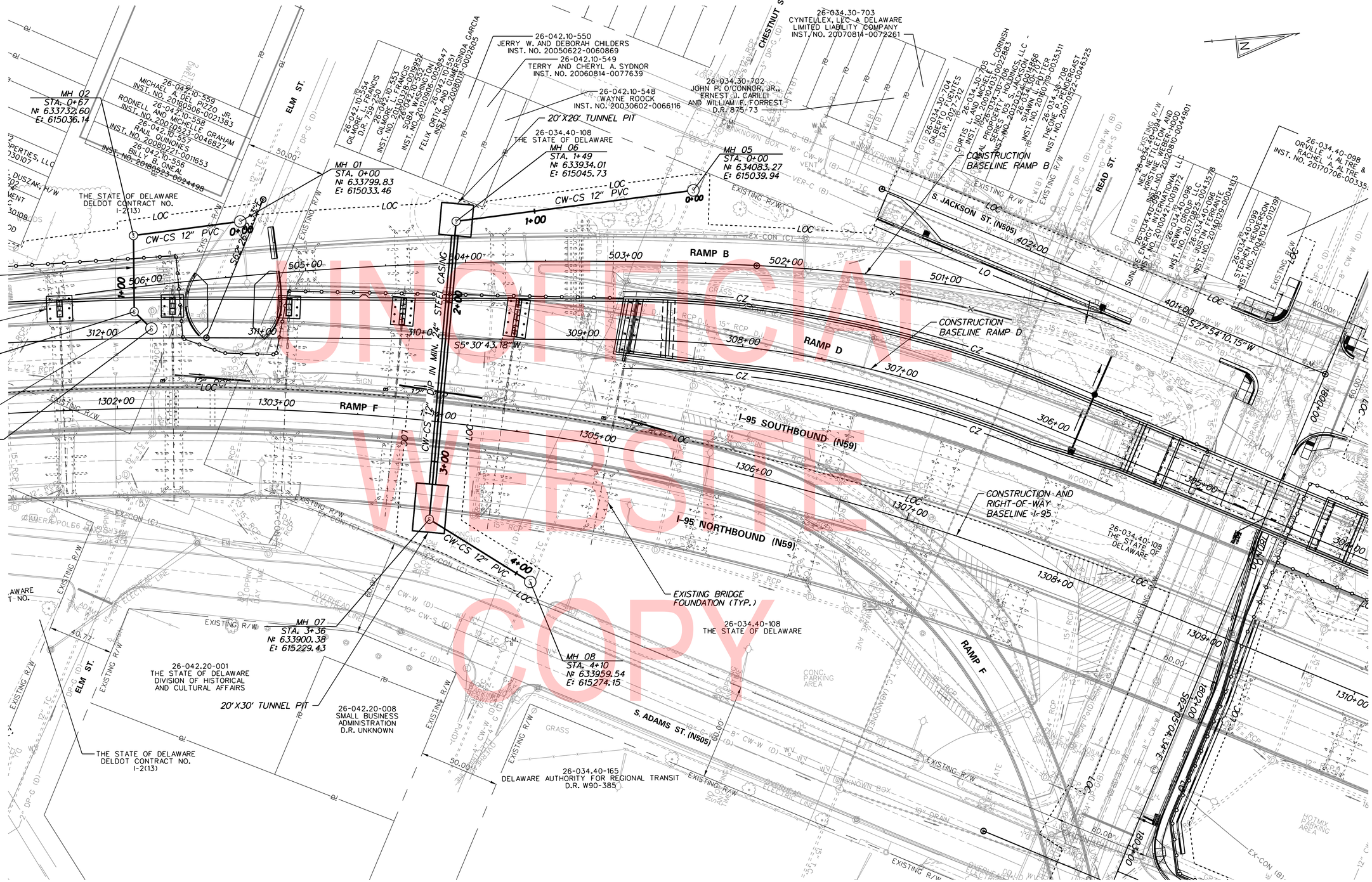

ADDENDA / REVISIONS	

SCALE
0 30 60 90
FEET

REHABILITATION OF I-95, 2ND STREET ON-RAMP IMPROVEMENTS

CONTRACT	BRIDGE NO.	
T201907402	DESIGNED BY: R. DICHRISTOFARO	
COUNTY		
NEW CASTLE	CHECKED BY: K. HEARN	

UTILITY RELOCATION PLAN

UR-02
SECTION
WRA
SHEET NO.
206

N:\3987-004\Contract_Romp_D\CADD\UR02.dgn
8/9/2019 9:40:39 AM

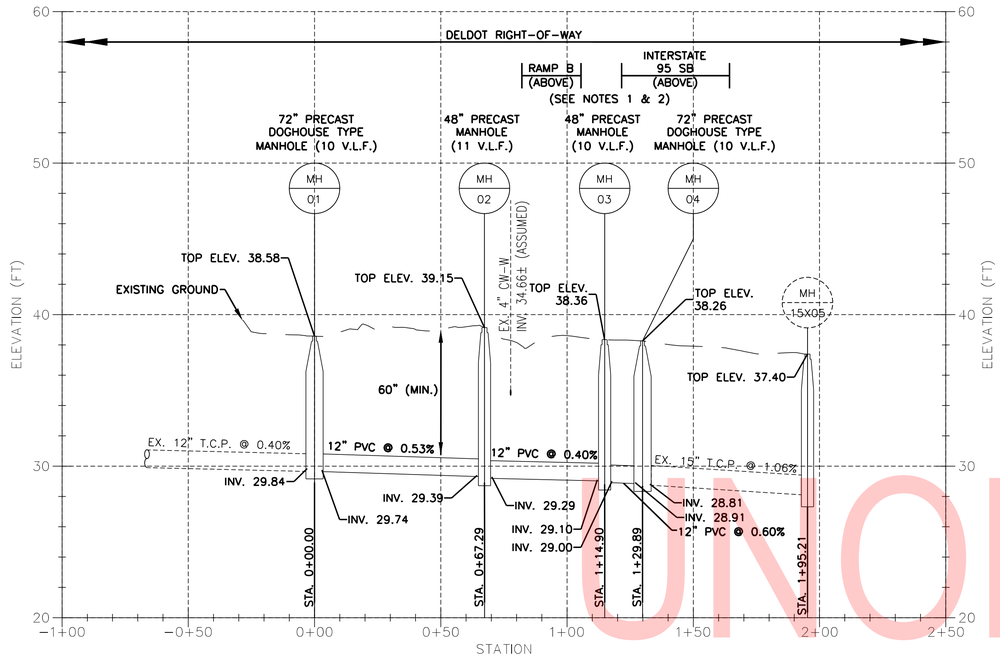

ELM STREET - UTILITY RELOCATION - 12"
HORIZONTAL SCALE: 1"=30'
VERTICAL SCALE: 1"=5'

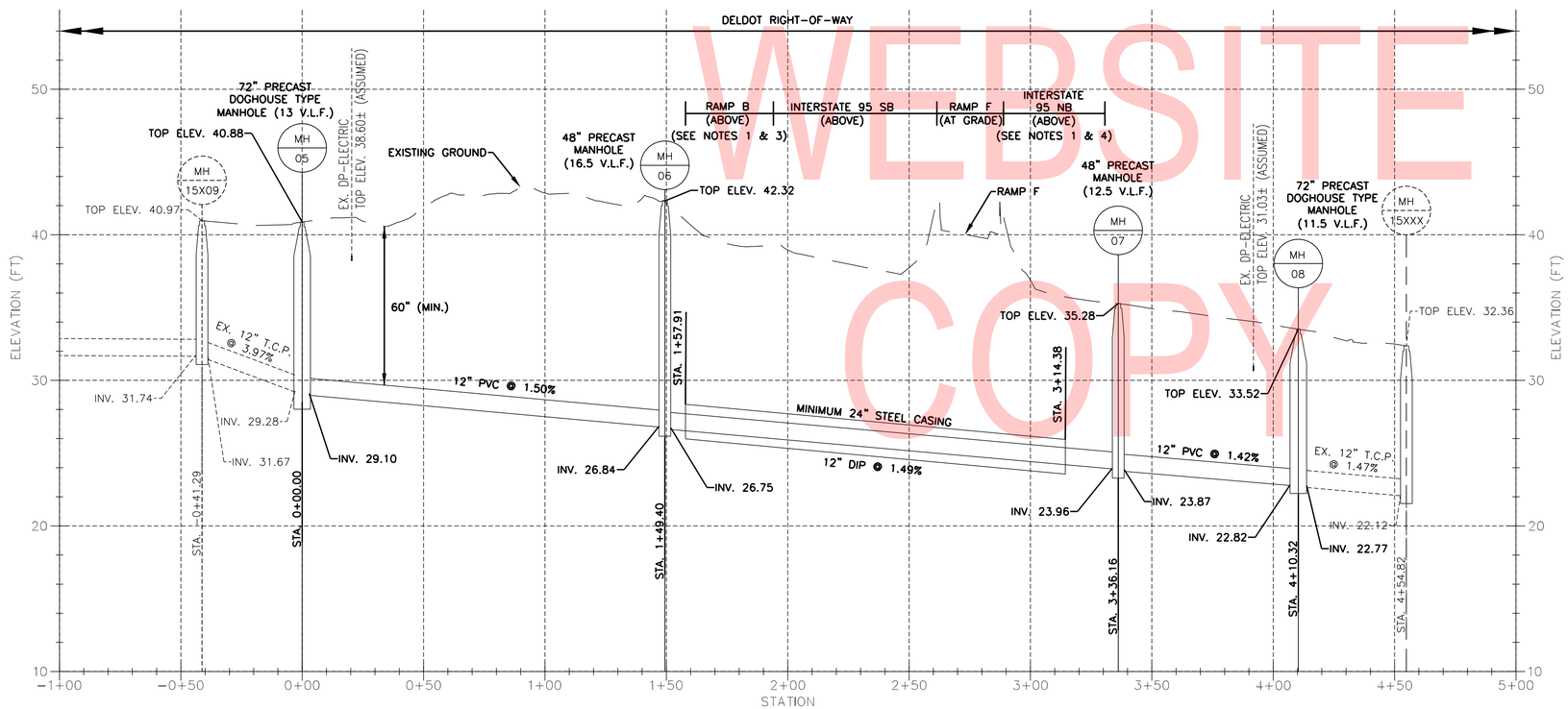

CHESTNUT STREET - UTILITY RELOCATION - 12"
HORIZONTAL SCALE: 1"=30'
VERTICAL SCALE: 1"=5'

NOTES:

1. VERTICAL CLEARANCES TO OVER-PASSING INTERSTATE 95 AND RAMPS IS NOT SHOWN TO SCALE ON THESE PROFILES. APPROXIMATE CLEARANCES ARE PROVIDED, IN NOTES 2, 3, AND 4, FOR INFORMATION ONLY AND ARE BASED ON FIELD MEASUREMENTS. THE CONTRACTOR IS RESPONSIBLE FOR VERIFYING EXISTING CONDITIONS PRIOR TO CONSTRUCTION.
2. APPROXIMATE CLEARANCE FROM EXISTING GROUND TO BOTTOM OF RAMP B AND INTERSTATE 95 SB AT ELM STREET IS 18 VERTICAL FEET.
3. APPROXIMATE CLEARANCE FROM EXISTING GROUND TO BOTTOM OF RAMP B AT TUNNEL CROSSING IS 3-4 VERTICAL FEET.
4. APPROXIMATE CLEARANCE FROM EXISTING GROUND TO BOTTOM OF INTERSTATE 95 NB AT CHESTNUT STREET IS 18 VERTICAL FEET.
5. EXISTING UTILITY CROSSINGS ARE BASED ON ASSUMED COVER. TEST HOLES ARE BEING COMPLETED AND ACTUAL ELEVATIONS WILL BE UPDATED.

UNOFFICIAL WEBSITE COPY

N:\31987_004\Contract_Ramp_D\CADD\UR03.dgn
8/9/2019 9:41:45 AM

ADDENDA / REVISIONS		SCALED AS NOTED	REHABILITATION OF I-95, 2ND STREET ON-RAMP IMPROVEMENTS	CONTRACT T201907402	BRIDGE NO.	UTILITY RELOCATION PROFILES	UR-03
				COUNTY NEW CASTLE	DESIGNED BY: R.DICHRISTOFARO		SECTION WRA
					CHECKED BY: K.HEARN		SHEET NO. 207

UNOFFICIAL WEBSITE COPY

Figure 2-3
Temporary Patch

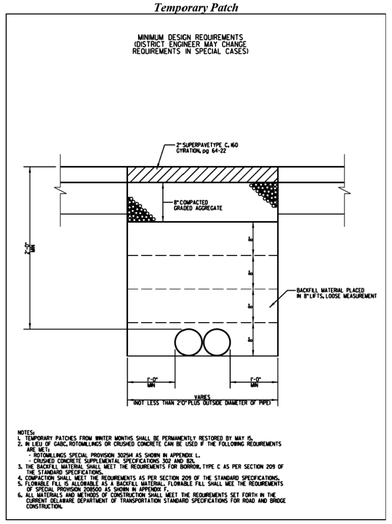

Figure 2-1
Boring/Jacking/Push-Augering Layout

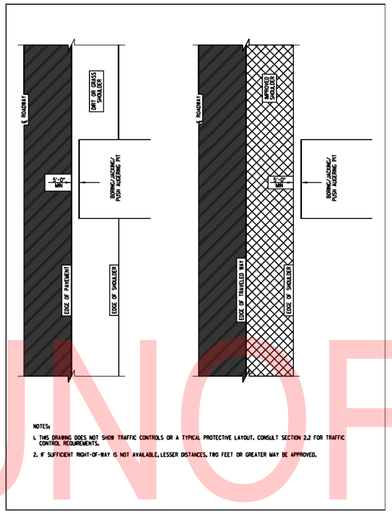

Figure 2-5
Roadway Patching Details at Manholes

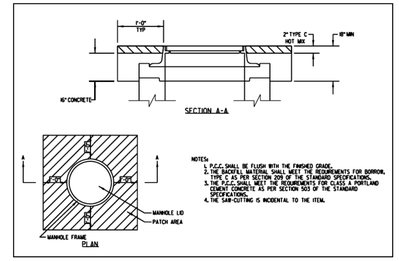

Figure 2-4
Minimum Permanent Cross-Road or Longitudinal Patch For Surface Treatments or Hot Mix Pavements

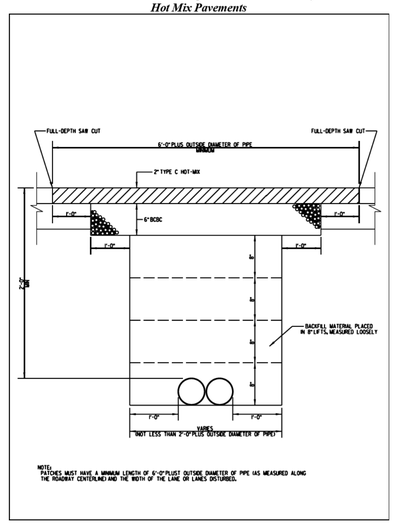

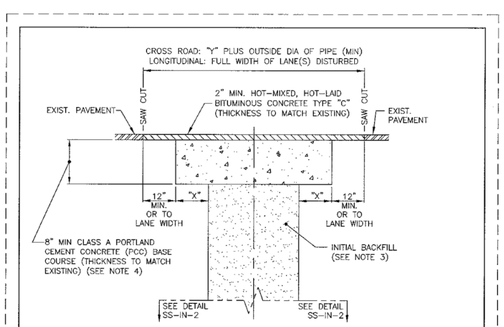

TYPICAL SECTION
(NOT TO SCALE)

NOTES:

1. BACKFILL TO BE COMPACTED IN 8" LIFTS TO 95% STANDARD PROCTOR DENSITY BY ASTM D698.
2. SEE DETAIL SS-IN-2 FOR TRENCH WIDTH AND PIPE BEDDING DETAILS.
3. FILL TRENCH WITH BORROW BACKFILL TYPE "C" UP TO 6" BELOW GRADE PER SECTION 20.03-2 OF NEW CASTLE COUNTY STANDARD SPECIFICATIONS.
4. FOR HOT-MIX PAVEMENT, 12" MIN. THICKNESS BITUMINOUS CONCRETE BASE COURSE MAY BE SUBSTITUTED FOR 8" MIN. OF CLASS A PORTLAND CEMENT CONCRETE (PCC).

ROADWAY TABLE	DIMS	HOT-MIX	PCC
BASE COURSE WIDTH	X	12"	24"
WEAR COURSE WIDTH	Y	6'-0"	8'-0"

SS-IN-1

NEW CASTLE COUNTY, DELAWARE
DEPARTMENT OF SPECIAL SERVICES

SANITARY SEWER DETAILS
PAVING RESTORATION

ISSUED 5/27/10
REVISED 12/06/11
REVISED
DETAIL SS-IN-1

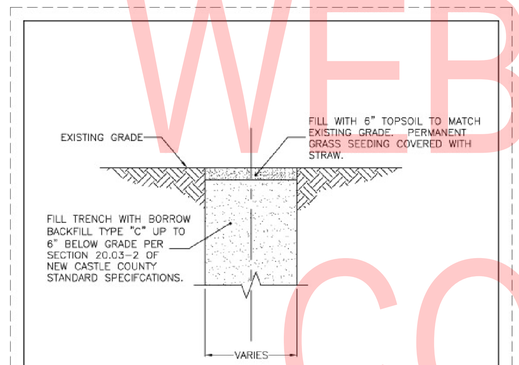

NOTES:

1. ALL BACKFILL AND BEDDING TO BE COMPACTED USING MECHANICAL TAMPER OR VIBRATORY COMPACTOR IN 8" LIFTS.
2. TYPICAL TRENCH WIDTH AND PIPE BEDDING, SEE DETAIL: SS-IN-2.

(NOT TO SCALE)

SS-IN-1A

NEW CASTLE COUNTY, DELAWARE
DEPARTMENT OF SPECIAL SERVICES

SANITARY SEWER DETAILS
RESTORATION & TRENCH
BACKFILL NON-PAVED AREA

ISSUED 5/27/10
REVISED 5/2/12
REVISED
DETAIL SS-IN-1A

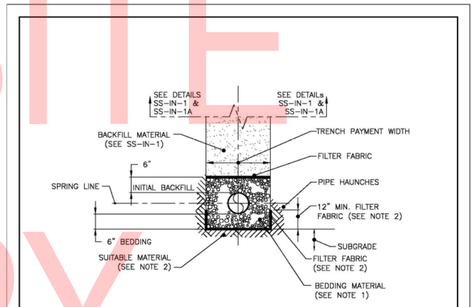

TYPICAL SECTION
(NOT TO SCALE)

NOTES:

1) STONE BEDDING: BEDDING, HAUNCHING AND INITIAL BACKFILL SHALL CONFORM TO SECTION 20.04-1 OF THE NCC STANDARD SPECIFICATIONS.
2) BEDDING: PRIOR TO PIPE INSTALLATION, CAREFULLY BRING 6" OF BEDDING MATERIAL TO PROPOSED BOTTOM OF PIPE ALONG THE ENTIRE LENGTH OF PIPE TO BE INSTALLED. IF SUBGRADE IS IN UNSUITABLE MATERIAL, SUITABLE FILL MATERIAL AND MIRAFI 140N OR APPROVED EQUAL FILTER FABRIC WILL BE REQUIRED PRIOR TO PLACEMENT OF BEDDING.
3) PIPE HAUNCHES: CAREFULLY WORK, BY HAND, STONE BEDDING FROM THE EDGE OF THE TRENCH UP AND UNDER THE PIPE TO SUPPORT THE HAUNCHES. CONTINUE FILLING, BY HAND, TO THE SPRING LINE OF THE PIPE.
4) FOR NEW CASTLE COUNTY CAPITAL IMPROVEMENT PROJECTS, SEE TABLE FOR TRENCH PAYMENT WIDTH.

PIPE DIAMETER	TRENCH PAYMENT WIDTH
6"	36"
8"	36"
10"	36"
12"	36"
15" AND 16"	36"
18"	42"
20" AND 21"	42"
24"	48"
27"	60"
30"	60"

SS-IN-2

NEW CASTLE COUNTY, DELAWARE
DEPARTMENT OF SPECIAL SERVICES

SANITARY SEWER DETAILS
TRENCH WIDTH & PIPE BEDDING

ISSUED 5/27/10
REVISED 12/06/11
REVISED 12/8/15
DETAIL SS-IN-2

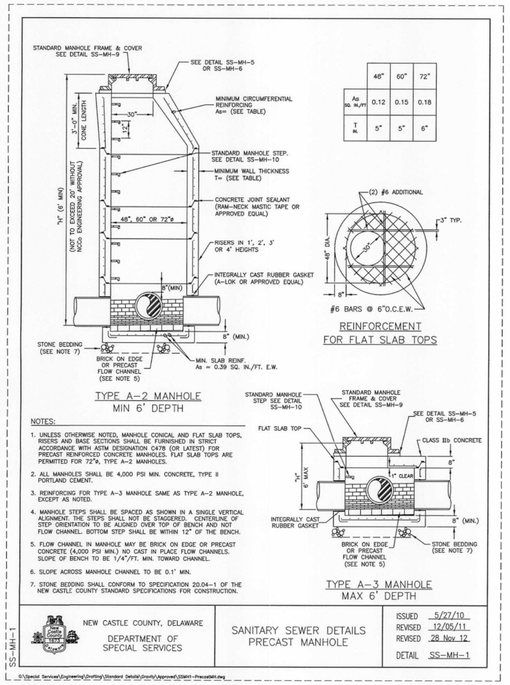

	48"	60"	72"
As SQ. IN./FT.	0.12	0.15	0.18
T IN.	5"	5"	6"

NOTES:

1. UNLESS OTHERWISE NOTED, MANHOLE CONICAL AND FLAT SLAB TOPS, RISERS AND BASE SECTIONS SHALL BE FURNISHED IN STRICT ACCORDANCE WITH ASTM DESIGNATION C478 (OR LATEST) FOR PRECAST REINFORCED CONCRETE MANHOLES. FLAT SLAB TOPS ARE PERMITTED FOR 72"ø, TYPE A-2 MANHOLES.
2. ALL MANHOLES SHALL BE 4,000 PSI MIN. CONCRETE, TYPE II PORTLAND CEMENT.
3. REINFORCING FOR TYPE A-3 MANHOLE SAME AS TYPE A-2 MANHOLE, EXCEPT AS NOTED.
4. MANHOLE STEPS SHALL BE SPACED AS SHOWN IN A SINGLE VERTICAL ALIGNMENT. THE STEPS SHALL NOT BE STAGGERED. CENTERLINE OF STEP ORIENTATION TO BE ALIGNED OVER TOP OF BENCH AND NOT FLOW CHANNEL. BOTTOM STEP SHALL BE WITHIN 12" OF THE BENCH.
5. FLOW CHANNEL IN MANHOLE MAY BE BRICK ON EDGE OR PRECAST CONCRETE (4,000 PSI MIN.) NO CAST IN PLACE FLOW CHANNELS. SLOPE OF BENCH TO BE 1/4"/FT. MIN. TOWARD CHANNEL.
6. SLOPE ACROSS MANHOLE CHANNEL TO BE 0.1" MIN.
7. STONE BEDDING SHALL CONFORM TO SPECIFICATION 20.04-1 OF THE NEW CASTLE COUNTY STANDARD SPECIFICATIONS FOR CONSTRUCTION.

SS-MH-1

NEW CASTLE COUNTY, DELAWARE
DEPARTMENT OF SPECIAL SERVICES

SANITARY SEWER DETAILS
PRECAST MANHOLE

ISSUED 5/27/10
REVISED 12/06/11
REVISED 28 Nov 12
DETAIL SS-MH-1

N:\31987-004\Contract_Ramp_D\CADD\UR04.dgn
8/9/2019 9:43:33 AM

ADDENDA / REVISIONS

NOT TO SCALE

REHABILITATION OF I-95, 2ND STREET ON-RAMP IMPROVEMENTS

CONTRACT	BRIDGE NO.
T201907402	
COUNTY	DESIGNED BY: R. DICHRISTOFARO
NEW CASTLE	CHECKED BY: K. HEARN

UTILITY RELOCATION DETAILS 1 OF 2

UR-04
SECTION WRA
SHEET NO. 208

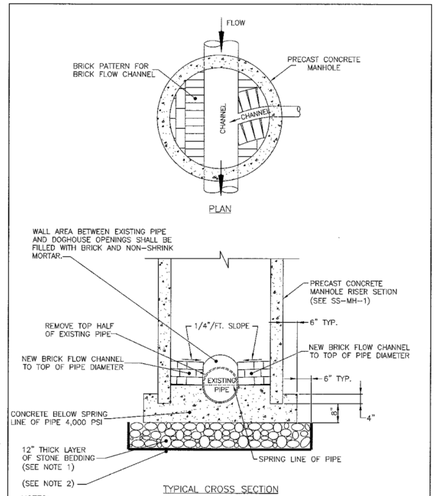

TYPICAL CROSS SECTION

NOTES:
1. STONE BEDDING SHALL CONFORM TO SECTION 20.04-1 OF THE NEW CASTLE COUNTY STANDARD SPECIFICATIONS FOR CONSTRUCTION.
2. IF MANHOLE EXCAVATION BOTTOM IS IN UNSUITABLE MATERIAL, SUITABLE FILL MATERIAL AND MIRAFI 140N OR APPROVED EQUAL FILTER FABRIC WILL BE REQUIRED PRIOR TO PLACEMENT OF BEDDING.

NEW CASTLE COUNTY, DELAWARE DEPARTMENT OF SPECIAL SERVICES	SANITARY SEWER DETAILS DOGHOUSE MANHOLE	ISSUED 5/27/10 REVISED 12/05/11 REVISED REVISED DETAIL SS-MH-4

SS-MH-4

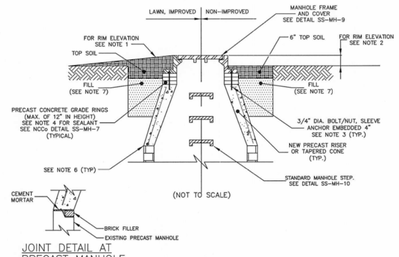

JOINT DETAIL AT PRECAST MANHOLE
(NOT TO SCALE)

NOTES:

1. FOR IMPROVED AREAS, IF NO RIM ELEVATION IS SHOWN, SET FRAME 1" TO 2" ABOVE SURROUNDING FINISHED GRADE AND TAPER SOIL TO TOP OF RIM.
2. FOR NON-IMPROVED AREAS, IF NO RIM ELEVATION IS SHOWN, IN LOCATIONS NOT SUBJECT TO FLOODING, SET RIM 6" ABOVE GRADE. RIM ELEVATION IN AREAS SUBJECT TO FLOODING SHALL BE DETERMINED BY ENGINEER.
3. FASTEN FRAME TO PRECAST RISER SECTION USING A MINIMUM OF TWO BOLTS. BOLT HOLES SHALL BE CAST INTO GRADE RINGS. NO FIELD DRILLING OF HOLES.
4. SEAL EACH RING JOINT BETWEEN FRAME AND ALL PRECAST GRADE RINGS USING SEALANT CONFORMING TO ASTM C920 AND SUITABLE FOR USE WITH MASONRY AND METAL MATERIALS. APPLY IN CONTINUOUS 1/2 INCH BEADS.
5. BRICK MAY NOT BE USED AS A SUBSTITUTE FOR GRADE RINGS OR SHIMS.
6. SEAL PRECAST RISER TO COMPETENT LAYER OF BLOCK OR BRICK USING CEMENT MORTAR. IF EXISTING MANHOLE IS PRE-CAST CONCRETE, SECURE BRICK IN GEOOVED JOINT, WITH CEMENT MORTAR PRIOR TO PLACING RISER SECTION.
7. REPLACE ALL UNSUITABLE MATERIAL WITH ACCEPTABLE FILL, COMPACTED IN ACCORDANCE WITH THE STANDARD SPECIFICATIONS OR SUPPLEMENTAL SPECIFICATIONS.

NEW CASTLE COUNTY, DELAWARE DEPARTMENT OF SPECIAL SERVICES	SANITARY SEWER DETAILS MANHOLE RISER SECTION NON-PAVED AREA	ISSUED 5/27/10 REVISED REVISED DETAIL SS-MH-5

SS-MH-5

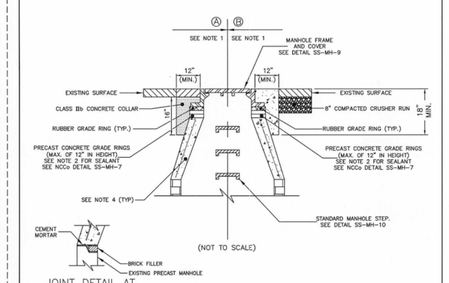

JOINT DETAIL AT PRECAST MANHOLE
(NOT TO SCALE)

NOTES:

1. AT THE DISCRETION OF THE CONTRACTOR, EITHER OPTION 'A' OR 'B' MAY BE INSTALLED ACCORDING TO DelDOT SPECIFICATIONS.
   Ⓐ CONTRACTOR SHALL PAVE TO TOP OF MANHOLE FRAME TO MATCH EXISTING CONDITIONS PER DelDOT STANDARD.
   Ⓑ CONTRACTOR WILL INSTALL SQUARE CONCRETE COLLAR, 12" FROM MANHOLE FRAME, TO TOP OF MANHOLE FRAME PER DelDOT STANDARD.
2. SEAL EACH JOINT BETWEEN FRAME, RUBBER GRADE RING AND PRECAST GRADE RINGS USING SEALANT CONFORMING TO ASTM C920 AND SUITABLE FOR USE WITH MASONRY, RUBBER AND METAL MATERIALS. APPLY IN CONTINUOUS 1/2 INCH BEADS.
3. BRICK MAY NOT BE USED AS A SUBSTITUTE FOR GRADE RINGS, SHIMS OR FOR ANY OTHER MANHOLE COMPONENTS.
4. SEAL PRECAST RISER TO COMPETENT LAYER OF BLOCK OR BRICK USING CEMENT MORTAR. IF EXISTING MANHOLE IS PRE-CAST CONCRETE, SECURE BRICK IN GROOVED JOINT, WITH CEMENT MORTAR PRIOR TO PLACING RISER SECTION.

NEW CASTLE COUNTY, DELAWARE DEPARTMENT OF SPECIAL SERVICES	SANITARY SEWER DETAILS MANHOLE RISER SECTION ROADWAY AREA	ISSUED 5/27/10 REVISED REVISED DETAIL SS-MH-6

SS-MH-6

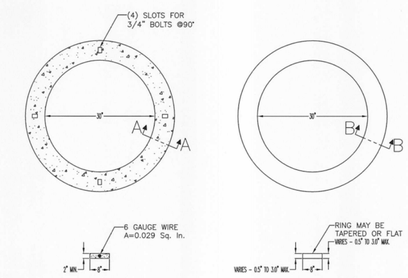

NOTES:

1. DESIGN MEETS REQUIREMENTS OF A.S.T.M. STANDARD C-478.
2. APPROXIMATE WEIGHT OF ONE REINFORCED CONCRETE RISER:
   24"ø - 140 lbs.
   30"ø - 165 lbs.

NOTES:

1. USE CNR INFRA-RISER RUBBER GRADE RINGS AS DISTRIBUTED BY EAST JORDAN IRON WORKS, INC. EAST JORDAN, MICHIGAN OR APPROVED EQUAL.
2. SEAL EACH JOINT BETWEEN FRAME, RUBBER GRADE RING AND PRECAST GRADE RINGS USING SEALANT CONFORMING TO ASTM C920 AND SUITABLE FOR USE WITH MASONRY, RUBBER AND METAL MATERIALS. APPLY IN CONTINUOUS 1/2 INCH BEADS.

NEW CASTLE COUNTY, DELAWARE DEPARTMENT OF SPECIAL SERVICES	SANITARY SEWER DETAILS GRADE RING	ISSUED 5/27/10 REVISED 12/05/11 REVISED 28 Nov 12 DETAIL SS-MH-7

SS-MH-7

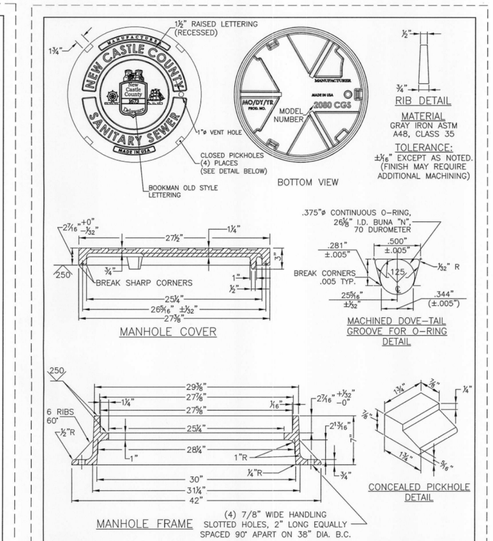

NOTE: MANHOLE FRAME AND COVER SHALL BE BY EAST JORDAN IRON WORKS, NEENAH FOUNDRY OR APPROVED EQUAL.

NEW CASTLE COUNTY, DELAWARE DEPARTMENT OF SPECIAL SERVICES	SANITARY SEWER DETAILS SELF SEALING MANHOLE FRAME & COVER	ISSUED 5/27/10 REVISED 12/02/10 REVISED 12/6/12 PLATE SS-MH-9

SS-MH-9

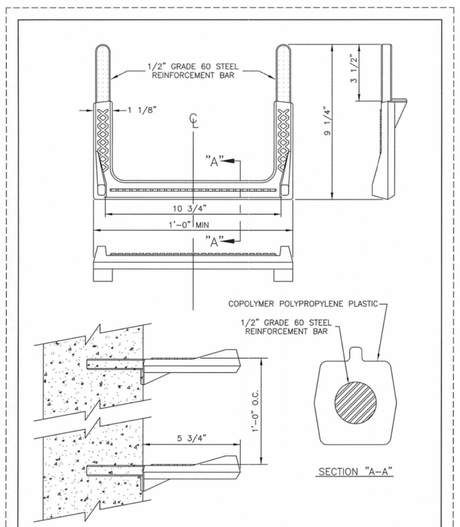

NEW CASTLE COUNTY, DELAWARE DEPARTMENT OF SPECIAL SERVICES	SANITARY SEWER DETAILS MANHOLE STEP	ISSUED 5/27/10 REVISED REVISED DETAIL SS-MH-10

SS-MH-10

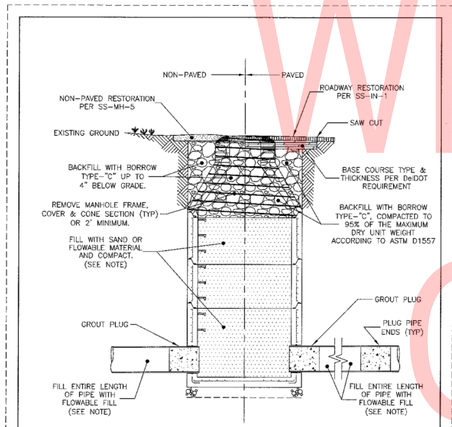

NOTE:
FLOWABLE FILL SHALL BE AS DEFINED BY THE AMERICAN CONCRETE INSTITUTE (ACI) AS A SELF COMPACTING CEMENTITIOUS MATERIAL THAT IS IN A FLOWABLE STATE AT PLACEMENT AND HAS A COMPRESSIVE STRENGTH OF 8.3 MPa (1,200 lb/in²) OR MORE AT 28 DAYS.

NEW CASTLE COUNTY, DELAWARE DEPARTMENT OF SPECIAL SERVICES	SANITARY SEWER DETAILS ABANDONED MANHOLE & PIPE	ISSUED 5/27/10 REVISED 9/26/11 REVISED 12/05/11 DETAIL SS-MH-12

SS-MH-12

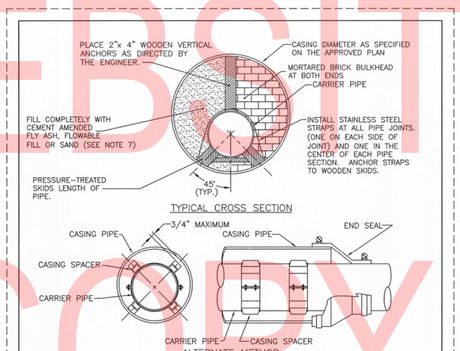

NOTES:

1. CASING SPACERS MAY BE USED IN LIEU OF SKIDS AND FILLING WITH CEMENT-AMENDED FLY ASH. SPACER MUST REACH TO WITHIN 3/4" OF TOP OF SLEEVE.
2. CASING SPACERS AND END SEALS SHALL BE AS MANUFACTURED BY ADVANCE PRODUCTS AND SYSTEMS INC. OR APPROVED EQUAL.
3. INSTALL CASING SPACERS PER MANUFACTURER'S RECOMMENDATIONS.
4. CASING PIPE SHALL CONFORM TO SECTION 20.10-3 OF NEW CASTLE COUNTY STANDARD SPECIFICATION.
5. STEEL CASING PIPE SHALL HAVE A MINIMUM COVER OF 3 FT. BELOW FINAL GRADE.
6. THE INSIDE DIAMETER OF THE CASING PIPE SHALL BE AT LEAST 12" GREATER THAN THE CARRIER PIPE, WITH A MINIMUM DIAMETER OF 24".
7. FLOWABLE FILL SHALL BE AS DEFINED BY THE AMERICAN CONCRETE INSTITUTE (ACI) AS A SELF COMPACTING CEMENTITIOUS MATERIAL THAT IS IN A FLOWABLE STATE AT PLACEMENT AND HAS A COMPRESSIVE STRENGTH OF 8.3 MPa (1,200 lb/in²) OR MORE AT 28 DAYS.

NEW CASTLE COUNTY, DELAWARE DEPARTMENT OF SPECIAL SERVICES	SANITARY SEWER DETAILS CASING PIPE	ISSUED 5/27/10 REVISED REVISED DETAIL SS-MISC-3

SS-MISC-3

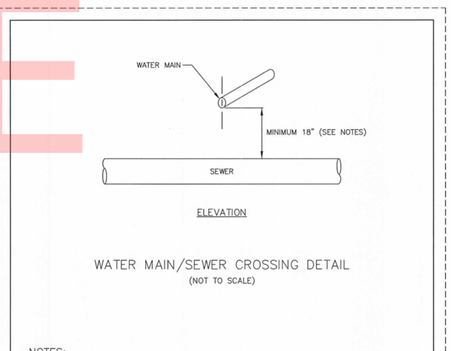

WATER MAIN/SEWER CROSSING DETAIL
(NOT TO SCALE)

NOTES:

IN THE EVENT THAT THE VERTICAL SEPARATION BETWEEN WATER MAIN AND SEWER (WITH WATER MAIN ABOVE OR BELOW SEWER) IS 18" OR LESS:

1) SEWER SHALL BE DESIGNED AND CONSTRUCTED EQUAL TO WATER PIPE AND SHALL BE PRESSURE TESTED AT 150 p.s.i. TO ASSURE WATER TIGHTNESS PRIOR TO BACKFILLING.
2) EITHER WATER MAIN OR SEWER LINE MAY BE ENCASED IN A WATERTIGHT CARRIER PIPE WHICH EXTENDS 10 FEET ON BOTH SIDES OF THE CROSSING, MEASURED PERPENDICULAR TO THE WATER MAIN. THE CARRIER PIPE SHALL BE OF MATERIALS APPROVED BY NEW CASTLE COUNTY FOR USE IN WATER MAIN CONSTRUCTION.
3) THE CROSSING SHALL BE ARRANGED SO THAT THE JOINTS IN THE SEWER PIPE WILL BE EQUIDISTANT AND AS FAR AS POSSIBLE FROM THE WATER MAIN JOINTS.
4) WHERE A WATER MAIN CROSSES UNDER A SEWER, ADEQUATE STRUCTURAL SUPPORT SHALL BE PROVIDED FOR THE SEWER TO MAINTAIN LINE AND GRADE.

NEW CASTLE COUNTY, DELAWARE DEPARTMENT OF SPECIAL SERVICES	SANITARY SEWER DETAILS WATER MAIN CROSSING	ISSUED 5/27/10 REVISED REVISED DETAIL SS-MISC-4

SS-MISC-4

UNOFFICIAL WEBSITE COPY

ADDENDA / REVISIONS	NOT TO SCALE	REHABILITATION OF I-95, 2ND STREET ON-RAMP IMPROVEMENTS	CONTRACT T201907402	BRIDGE NO.	UTILITY RELOCATION DETAILS 2 OF 2	UR-05 SECTION WRA
			COUNTY NEW CASTLE	DESIGNED BY: R. DICHRISTOFARO CHECKED BY: K. HEARN		SHEET NO. 209

N:\31987-004\Contract_Ramp_D\CADD\UR05.dgn
8/9/2019 9:44:27 AM

GENERAL EROSION CONTROL NOTES

1.

EROSION POTENTIAL FOR THIS PROJECT	CONTRACTOR ESC SUPERVISOR REQUIREMENT
( ) INSIGNIFICANT	NONE
(X) MINOR	CONTRACTOR TRAINING PROGRAM, AS DEFINED IN SECTION 6.2 OF THE DELAWARE SEDIMENT AND STORMWATER REGULATIONS.
( ) MAJOR	CERTIFIED CONSTRUCTION REVIEWER (CCR), AS DEFINED IN SECTION 6.3 OF THE DELAWARE SEDIMENT AND STORMWATER REGULATIONS.

2. THE DISTURBED AREA FOR THIS PROJECT IS 2.46 ACRES.

3. THE TOTAL IMPERVIOUS AREA ADDED DUE TO THIS PROJECT IS -0.06 ACRES.

4. THE SEDIMENT AND STORMWATER MANAGEMENT PLANS HAVE BEEN APPROVED BY DELDOT'S STORMWATER ENGINEER UNDER DELDOT'S DELEGATED AUTHORITY. THE SEDIMENT AND STORMWATER MANAGEMENT PLANS ARE VALID FOR A FIVE YEAR PERIOD, BEGINNING ON THE DATE THE STORMWATER ENGINEER SIGNED THE CONSTRUCTION TITLE SHEET. IF THE FINAL ACCEPTANCE OF THE PROJECT IS ANTICIPATED TO EXTEND BEYOND THE FIVE YEARS, THE CONTRACTOR WILL INFORM THE ENGINEER THREE MONTHS PRIOR TO THE EXPIRATION OF THE APPROVED SEDIMENT AND STORMWATER MANAGEMENT PLANS. THE STORMWATER ENGINEER WILL REVIEW THE CURRENT SEDIMENT AND STORMWATER MANAGEMENT PLAN AND ISSUE AN EXTENSION WITH ANY APPROPRIATE MODIFICATIONS.

Vincent W. Davis 09/09/2019

DELDOT STORMWATER ENGINEER — DATE

"I CERTIFY TO THE EST OF MY KNOWLEDGE AND BELIEF THAT THESE PLANS MEET THE REQUIREMENTS OF THE DELAWARE SEDIMENT AND STORMWATER REGULATIONS AND THAT ALL CLEARING, GRADING, AND CONSTRUCTION WILL BE ACCOMPLISHED PURSUANT TO THE PLAN."

EROSION & SEDIMENT CONTROL	
CFL	COMPOST FILTER LOG
CFL	COMPOST FILTER LOG / LENGTH
DWBAG	DEWATERING BAG
DWB	DEWATERING BASIN
ED	EARTH DIKE
	INLET SEDIMENT CONTROL
	PERIMETER DIKE/SWALE
PST	PORTABLE SEDIMENT TANK
SBD	SANDBAG DIKE
SB	SANDBAG DIVERSION
SCD	STONE CHECK DAM
SCE	STABILIZED CONSTRUCTION ENTRANCE
SF	SILT FENCE / LENGTH
SF	SILT FENCE
RSF	REINFORCED SILT FENCE / LENGTH
RSF	REINFORCED SILT FENCE
SSF	SUPER SILT FENCE / LENGTH
SSF	SUPER SILT FENCE
SP	SUMP PIT
ST	SEDIMENT TRAP / NUMBER
ST	SEDIMENT TRAP
ST	SEDIMENT TRAP WITH INLET AS OUTLET
ST	SEDIMENT TRAP PIPE OUTLET
SW	STILLING WELL
	TEMPORARY SWALE
TSD	TEMPORARY SLOPE DRAIN
T XXX	TURBIDITY CURTAIN / LENGTH
T	TURBIDITY CURTAIN

UNOFFICIAL WEBSITE COPY

N:\31987-004\Contract_Ramp_D\CADD\Traffic\CS0-01.dgn
9/9/2019 11:26:20 AM

ADDENDA / REVISIONS	

NOT TO SCALE

REHABILITATION OF I-95, 2ND STREET ON-RAMP IMPROVEMENTS

CONTRACT	BRIDGE NO.	
T201907402	DESIGNED BY: K. VOLZ	
COUNTY		
NEW CASTLE	CHECKED BY: J. COSLER	

EROSION CONTROL NOTES

CS-01
SECTION WRA
SHEET NO. 210

TRAFFIC CONTROL NOTES

1) LANE SHIFTS ON I-95 SHALL BE INSTALLED IN ACCORDANCE WITH THE TEMPORARY SIGNING AND STRIPING SHOWN IN TYPICAL APPLICATION TA-36.

2) THIS PROJECT IS CONSIDERED A SIGNIFICANT PROJECT AS DEFINED BY DELDOT'S WORK ZONE MOBILITY PROCEDURES AND GUIDELINES. A MODIFIED TYPE B TRANSPORTATION MANAGEMENT PLAN (TMP) HAS BEEN PREPARED AND IS AVAILABLE FOR VIEWING BY CONTACTING THE DEPARTMENT'S SAFETY PROGRAMS MANAGER AT (302) 659-4060. ALL MONITORING REQUIREMENTS OF THE TMP SHALL BE CONDUCTED BY DELDOT FORCES UNLESS OTHERWISE DIRECTED BY THE ENGINEER. THE CONTRACTOR SHALL COMPLETE MODIFICATIONS TO THE TMP IF THE CONTRACTOR DESIRES TO CHANGE THE TIME RESTRICTIONS OR THE TRAFFIC CONTROL PLAN. THE MODIFIED TMP SHALL BE PREPARED BY A LICENSED PROFESSIONAL ENGINEER, REGISTERED IN THE STATE OF DELAWARE.

3) DURING THE PERIOD BETWEEN PHASES, THE LIMITS OF THE WORK ZONE MAY BE ADJUSTED AS DIRECTED BY THE ENGINEER IN THE FIELD. A WARNING SIGN SHALL NOT BE PAID WHILE THE SIGN IS NOT IN USE, INCLUDING DURATIONS WHEN THE CONTRACTOR CHOOSES TO BAG THE SIGN.

4) ALL WORK REQUIRING LANE CLOSURES IN ADDITION TO THE PERMANENT LANE CLOSURES SHOWN ON THE CONTRUCTION PHASING, MAINTENANCE OF TRAFFIC AND EROSION CONTROL PLANS SHALL BE COMPLETED DURING HOURS SHOWN IN TABLES ON DRAWING CS-03.

5) REMOVAL OF EXISTING PAVEMENT MARKINGS AS DIRECTED BY THE ENGINEER SHALL BE PAID UNDER ITEM 817031 - REMOVAL OF PAVEMENT STRIPING. ALL MARKINGS THAT ARE NO LONGER IN USE AND CONFLICT WITH THE TEMPORARY PAVEMENT MARKINGS IN USE DURING A GIVEN PHASE ARE TO BE REMOVED BY THE CONTRACTOR AND MUST BE COMPLETELY OBLITERATED BY WATERBLASTING. PAINTING OVER THE CONFLICTING STRIPING WILL NOT BE ACCEPTED AS A METHOD OF REMOVAL. THE CONTRACTOR SHALL HAVE AT LEAST 2 WATERBLASTING TRUCKS ON SITE ANYTIME PAVEMENT MARKING REMOVAL IS BEING PERFORMED. IF WEATHER CONDITIONS (FREEZING TEMPERATURES) PREVENT WATERBLASTING, THEN ALTERNATE REMOVAL METHODS MAY BE PERMITTED WITH APPROVAL OF THE ENGINEER.

6) THE CONTRACTOR SHALL SUPPLY PORTABLE CHANGEABLE MESSAGE SIGNS UNDER ITEM 803001 - FURNISH AND MAINTAIN PORTABLE CHANGEABLE MESSAGE SIGN. THE CONTRACTOR MUST DESIGNATE A PERSON RESPONSIBLE FOR THESE MESSAGE BOARDS. RELOCATING THE MESSAGE BOARDS TO DIFFERENT LOCATIONS WILL BE INCIDENTAL TO ITEM 803001. IN ADDITION TO THE LOCATIONS DEPICTED ON THE TRAFFIC CONTROL PLANS, MESSAGE BOARDS SHALL BE POSTED ALONG I-95 NORTBOUND AND SOUTHBOUND INFORMING MOTORISTS OF CHANGES IN TRAFFIC PATTERNS ASSOCIATED WITH EACH PHASE OF CONSTRUCTION. THE PCMSs SHALL DISPLAY THE MESSAGE "NEW TRAFFIC PATTERN" (SCREEN 1) "STARTING MM/DD" (SCREEN 2) FOR SEVEN DAYS PRIOR TO TRAFFIC PATTERN CHANGES AND THE MESSAGE "NEW TRAFFIC PATTERN" (SCREEN 1) "USE CAUTION" (SCREEN 2) FOR SEVEN DAYS AFTER THE TRAFFIC PATTERN HAS BEEN CHANGED. ALL LOCATIONS AND MESSAGES FOR THE MESSAGE BOARDS SHALL BE APPROVED BY THE DISTRICT SAFETY OFFICER.

7) TEMPORARY IMPACT ATTENUATORS ON I-95 SHALL BE NON-GATING, REDIRECTIVE, TL-3. TEMPORARY IMPACT ATTENUATORS IN USE ON OTHER ROADWAYS SHALL BE DESIGNED FOR THE DESIGN SPEED OF THE ROADWAY OR 85TH PERCENTILE PREVAILING SPEED, AS APPROVED BY THE ENGINEER.

8) THE REFLECTIVE LENSES ONLY OF ANY EXISTING RAISED/RECESSED PAVEMENT MARKERS IN CONFLICT WITH PROPOSED TEMPORARY STRIPING SHALL BE REMOVED. PAYMENT FOR REMOVAL OF THE REFLECTIVE LENSES WILL BE INCIDENTAL TO ITEM 801000 - MAINTENANCE OF TRAFFIC. REFER TO SIGNING, STRIPING AND CONDUIT PLANS FOR INSTALLATION OF PERMANENT PLOWABLE RAISED PAVEMENT MARKERS.

9) W11-10 (48"x48") TRUCK WARNING SIGNS SHALL BE INSTALLED 500 FEET IN ADVANCE OF ALL ACTIVE STABILIZED CONSTRUCTION ENTRANCES (SCEs). THE CONTRACTOR SHALL COORDINATE THE PLACEMENT OF THE TRUCK WARNING SIGNS WITH OTHER SIGNING AS APPROVED BY THE ENGINEER. SCEs SHALL BE DELINEATED BY TYPE III BARRICADES AT ALL TIMES.

10) WHEN THE LEADING END OF THE BARRIER IS OPEN FOR CONSTRUCTION ACCESS AND WORK IS OCCURRING WITHIN THE BARRIER LENGTH OF NEED (730 FEET FROM THE LEADING END OF THE BARRIER FOR I-95), A TYPE 2 TRUCK MOUNTED ATTENUATOR SHALL BE PROVIDED AT THE LEADING END OF THE BARRIER TO PROTECT THE WORK AREA AND TO PREVENT ERRANT VEHICLES FROM TRAVELING BEHIND THE BARRIER.

11) THE TYPICAL APPLICATIONS FROM PART 6 OF THE DELAWARE MUTCD SHALL BE UTILIZED FOR CONSTRUCTION ACTIVITIES WHICH OCCUR OUTSIDE OF THE WORK AREAS ESTABLISHED ON THE CONSTRUCTION PHASING, MOT AND EROSION CONTROL PLANS, OR AS DIRECTED BY THE ENGINEER:

    A. TYPICAL APPLICATIONS 5A, 42, 43, AND 44 - ALL LIGHTING, SIGNING AND TEMPORARY SIGNING WORK IN THE MEDIAN AND ON OR OFF THE SHOULDER

    B. TYPICAL APPLICATIONS 33, 42, 43, AND 44 - INSTALLATION OF LIGHT POLES OVER TRAVEL LANES

    C. TYPICAL APPLICATIONS 33, 35H, 37, 42 & 44 - ALL OVERHEAD SIGNING WORK

    D. TYPICAL APPLICATIONS 35D & 35F - INSTALLATION OF ALL LANE LINE, CENTERLINE, AND EDGE LINE PAVEMENT MARKINGS

    F. TYPICAL APPLICATIONS 5A, 33, 42, 43, AND 44 - INSTALLATION OF ITMS EQUIPMENT

    G. TYPICAL APPLICATIONS 5A, 33, AND 37 - PAVING & PATCHING

12) IN ADDITION TO THE TRAVEL LANE AND ROAD CLOSURE RESTRICTIONS NOTED IN THE STANDARD SPECIFICATIONS, TRAVEL LANE, TURN LANE, RAMP CLOSURES AND/OR ROAD CLOSURES ARE NOT PERMITTED DURING THE FOLLOWING HOLIDAY PERIODS (THE WORK DAY PRECEEDING, THE HOLIDAY, AND THE WORK DAY FOLLOWING), UNLESS OTHERWISE NOTED IN THE CONTRACT DOCUMENTS:
    a. MARTIN LUTHER KING JR DAY
    b. PRESIDENTS DAY
    c. MOTHERS DAY

13) ALL DRUMS ON I-95 SHALL BE DOUBLE RINGED.

14) FLAGGERS ARE NOT PERMITTED ON INTERSTATES, HIGHWAYS, FREEWAYS AND ASSOCIATED RAMPS.

15) AMERICAN TRAFFIC SAFETY SERVICES ASSOCIATION (ATSSA) CERTIFIED TRAFFIC CONTROL SUPERVISOR REQUIREMENT FOR THIS PROJECT.

( )	THE CONTRACTOR SHALL NOT BE REQUIRED TO HAVE AN ATSSA SUPERVISOR ASSIGNED TO THIS PROJECT.
X	THE CONTRACTOR SHALL HAVE AN ATSSA SUPERVISOR ASSIGNED TO THIS PROJECT. THE CONTRACTOR'S GENERAL SUPERINTENDENT FOR THIS PROJECT OR ANOTHER ATSSA CERTIFIED MEMBER OF THE CONTRACTOR'S PROJECT STAFF MAY BE THE ATSSA SUPERVISOR. PAYMENT FOR ATSSA SUPERVISOR IS INCIDENTAL TO ITEM 801000.

TRAFFIC CONTROL NOTES (CONTINUED)

16) THE CONTRACTOR SHALL SEQUENCE THE SIDEWALK AND CURB RAMP WORK AND COORDINATE THE WORK WITH THE OTHER ONGOING CONSTRUCTION WORK, TEMPORARY VEHICULAR TRAFFIC CONTROL, AND TEMPORARY PEDESTRIAN TRAFFIC CONTROL/DETOURS SO THAT PEDESTRIAN ACCESS IS MAINTAINED AT ALL TIMES OR TEMPORARY MEASURES ARE PROVIDED, AS DIRECTED BY THE ENGINEER.

SEDIMENT AND STORMWATER MANAGEMENT NOTES

1) DUST CONTROL
DUST IS TO BE CONTROLLED EXCLUSIVELY THROUGH THE USE OF WATER. COSTS ASSOCIATED WITH THE FURNISHING AND APPLICATION OF WATER FOR DUST CONTROL SHALL BE INCIDENTAL TO ALL THE CONTRACT ITEMS.

2) SLOPE MAINTENANCE
PRIOR TO APPLYING TOPSOIL OR ANY SEEDING ITEM ON FINAL SLOPES, THE SLOPES SHALL BE TRACKED BY DRIVING A BULLDOZER UP AND DOWN THE SLOPES SUCH THAT THE CLEATS MAKE HORIZONTALLLY ORIENTED INDENTATIONS IN THE SLOPE. ALL COSTS ASSOCIATED WITH PERFORMING THIS WORK SHALL BE INCIDENTAL TO THE SEEDING ITEM BEING APPLIED TO THE FINAL SLOPE.

3) EXISTING INLETS AND PIPES
ALL EXISTING INLETS AND PIPES WITHIN THE PROJECT LIMITS TO REMAIN SHALL BE CLEANED OUT. THE COST OF CLEANING OUT THE EXISTING PIPES TO REMAIN IS INCIDENTAL TO ITEM 201000.

4) HERBICIDE APPLICATION
THE CONTRACTOR SHALL APPLY AS DIRECTED BY ENGINEER IN THE FIELD. ALL WORK SHALL BE INCIDENTAL TO THE RESPECTIVE SEEDING ITEM.

5) REVIEW AND OR APPROVAL OF THE SEDIMENT AND STORMWATER MANAGEMENT PLAN SHALL NOT RELIEVE THE CONTRACTOR FROM HIS OR HER RESPONSIBILITIES FOR COMPLIANCE WITH THE REQUIREMENTS OF THE SEDIMENT AND STORMWATER EGULATIONS, NOR SHALL IT RELIEVE THE CONTRACTOR FROM ERRORS OR OMISSIONS IN THE APPROVED PLAN.

6) SOIL DISTURBANCE
FOLLOWING SOIL DISTURBANCE OR REDISTURBANCE, PERMANENT OR TEMPORARY STABILIZATION SHALL BE COMPLETED WITHIN 14 CALENDAR DAYS.

7) THE CONTRACTOR SHALL BE RESPONSIBLE FOR MAINTENANCE AND REPAIR OF ALL EROSION AND SEDIMENT CONTROLS AND STORMWATER MANAGEMENT PRACTICES DURING THE PROJECT.

8) SLOPE DRAINS
THE CONTRACTOR SHALL INSTALL AND MAINTAIN TEMPORARY SLOPE DRAINS DURING THE CONSTRUCTION OF THE EMBANKMENT, LOCATIONS TO BE DETERMINED IN THE FIELD AS DIRECTED BY THE ENGINEER. ALL COSTS SHALL BE INCLUDED IN ITEM NO. 907012, TEMPORARY SLOPE DRAIN, 12".

9) EROSION CONTROL MEASURES SHALL BE INSTALLED AS SHOWN ON THE PLANS OR AS DIRECTED BY ENGINEER IN THE FIELD.

10) CONTRACTOR SHALL MOW GRASS AREAS AS DIRECTED BY THE ENGINEER. PAYMENT SHALL BE INCIDENTAL TO THE RESPECTIVE SEEDING ITEM.

TRAFFIC OFFICER NOTES

1) THE CONTRACTOR SHALL PROVIDE ONE TRAFFIC OFFICER FOR A FOUR-HOUR PERIOD TWICE PER MONTH TO PERFORM SPEED ENFORCEMENT ALONG ROADWAYS WITHIN THE PROJECT LIMITS. AT THE END OF THE DAY'S ENFORCEMENT ACTIVITY, THE TRAFFIC OFFICERS SHALL PROVIDE A REPORT TO THE ENGINEER IDENTIFYING THE NUMBER OF VEHICLES STOPPED, NUMBER AND TYPE OF CITATIONS GIVEN AND THE RANGE OF SPEEDS OF THOSE VEHICLES STOPPED. ENFORCEMENT LOCATIONS WILL BE DETERMINED BY THE ENGINEER.

2) THE CONTRACTOR SHALL PROVIDE TWO TRAFFIC OFFICERS FOR NIGHTTIME MOBILE PAVEMENT MARKING OPERATIONS ON I-95.

3) THE CONTRACTOR SHALL PROVIDE TWO TRAFFIC OFFICERS FOR MAJOR PHASE CHANGE TRAFFIC SWITCHES ON I-95. THE TRAFFIC OFFICERS SHALL BE ON-SITE DURING THE TRAFFIC SWITCH AND DURING THE FIRST MORNING PEAK PERIOD (6AM - 9AM) AND THE FIRST AFTERNOON PEAK PERIOD (3PM - 7PM) AFTER THE TRAFFIC SWITCH HAS BEEN IMPLEMENTED.

4) THE CONTRACTOR SHALL PROVIDE TWO TRAFFIC OFFICERS FOR ANY ROLLING ROAD BLOCK OPERATIONS IN ACCORDANCE WITH TA-35H.

5) THE CONTRACTOR SHALL PROVIDE ONE TRAFFIC OFFICER FOR ANY OPERATION WHERE AN EXISTING SIGNALIZED INTERSECTION IS PLACED IN FLASH-MODE. THE TRAFFIC OFFICER IS THE ONLY INDIVIDUAL THAT CAN PLACE A TRAFFIC SIGNAL IN FLASH-MODE AND THE TRAFFIC OFFICER MUST STAY ON LOCATION UNTIL THE SIGNAL IS PLACED BACK IN FULL COLOR OPERATION IN ACCORDANCE WITH DELDOT'S TEMPORARY TRAFFIC CONTROL WITHIN INTERSECTIONS MEMORANDUM (WWW.MUTCD.DELDOT.GOV).

6) FOR TEMPORARY NIGHTTIME CLOSURES OF ANY ROAD OR RAMP, THE CONTRACTOR SHALL PROVIDE ONE TRAFFIC OFFICER AT EACH CLOSURE POINT SHOWN IN THE APPLICABLE DETOUR PLANS. THE TRAFFIC OFFICER SHALL BE POSITIONED BEHIND THE CLOSURE BARRICADE WITH THE FRONT OF THE VEHICLE FACING APPROACHING TRAFFIC AND ALL EMERGENCY LIGHTS SHALL BE ACTIVATED. THE TRAFFIC OFFICER SHALL PROVIDE A REPORT TO THE ENGINEER AT THE END OF THE DAY'S ACTIVITY IDENTIFYING THE NUMBER OF VEHICLES THAT ATTEMPTED TO NOT FOLLOW THE DETOUR.

7) ADDITIONAL USAGE OF TRAFFIC OFFICERS OUTSIDE OF THE ABOVE REQUIREMENTS SHALL BE APPROVED BY THE ENGINEER IN CONSULTATION WITH THE TRAFFIC SAFETY SECTION.

ROADWAY NOTES

1) THE CONTRACTOR IS RESPONSIBLE FOR THE MAINTENANCE OF EXISTING PAVEMENT WITHIN THE PROJECT LIMITS FOR THE DURATION OF THE CONTRACT OR AS DIRECTED BY THE ENGINEER OR DESIGNER. ALL REPAIRS ARE AT THE CONTRACTOR'S EXPENSE AS DIRECTED BY THE ENGINEER.

UNOFFICIAL WEBSITE COPY

WORK HOUR RESTRICTION NOTES

1) THE I-95 SB LEFT LANE CLOSURE ON PHASE 1 - DETAIL 1 (CS-104 THROUGH CS-108) TO PERFORM THE BRIDGE SCUPPER WORK IS PERMITTED BETWEEN THE HOURS OF FRIDAY AT 10 PM THROUGH THE IMMEDIATELY FOLLOWING MONDAY AT 5 AM (I.E. WEEKEND CLOSURE PERIOD). THE WEEKEND CLOSURE PERIOD IS PERMITTED FOR ONE WEEKEND ONLY.

2) LONG-TERM ROADWAY CLOSURES AND DETOURS ARE PERMITTED FOR RAMP B AND RAMP C ONLY.

3) ALL WORK REQUIRING LANE CLOSURES IN ADDITION TO THE PERMANENT LANE CLOSURES SHOWN ON THE CONSTRUCTION PHASING, M.O.T. AND EROSION CONTROL PLANS SHALL BE COMPLETED DURING THE HOURS PERMITTED IN THE FOLLOWING TABLES.

SINGLE LANE CLOSURE MATRIX FOR I-95 NORTHBOUND

HOUR	SUNDAY	MONDAY	TUESDAY	WEDNESDAY	THURSDAY	FRIDAY	SATURDAY
0	X	X					X
1	X	X					X
2	X	X					X
3	X	X					X
4	X	X					X
5	X	X					X
6	X	X	X	X	X	X	X
7	X	X	X	X	X	X	X
8	X	X	X	X	X	X	X
9	X					X	X
10	X					X	X
11	X					X	X
12	X					X	X
13	X					X	X
14	X					X	X
15	X	X	X	X	X	X	X
16	X	X	X	X	X	X	X
17	X	X	X	X	X	X	X
18	X	X	X	X	X	X	X
19	X	X	X	X	X	X	X
20	X	X	X	X	X	X	X
21	X					X	X
22	X					X	X
23	X					X	X

SINGLE LANE CLOSURE MATRIX FOR I-95 SOUTHBOUND

HOUR	SUNDAY	MONDAY	TUESDAY	WEDNESDAY	THURSDAY	FRIDAY	SATURDAY
0	X	X					X
1	X	X					X
2	X	X					X
3	X	X					X
4	X	X					X
5	X	X					X
6	X	X	X	X	X	X	X
7	X	X	X	X	X	X	X
8	X	X	X	X	X	X	X
9	X	X	X	X	X	X	X
10	X	X	X	X	X	X	X
11	X	X	X	X	X	X	X
12	X	X	X	X	X	X	X
13	X	X	X	X	X	X	X
14	X	X	X	X	X	X	X
15	X	X	X	X	X	X	X
16	X	X	X	X	X	X	X
17	X	X	X	X	X	X	X
18	X	X	X	X	X	X	X
19	X	X	X	X	X	X	X
20	X	X	X	X	X	X	X
21	X					X	X
22	X					X	X
23	X					X	X

ROADWAY CLOSURE AND DETOUR FOR LANCASTER AVE/M.L.K. JR. BLVD., MARYLAND AVE, LINDEN ST

HOUR	SUNDAY	MONDAY	TUESDAY	WEDNESDAY	THURSDAY	FRIDAY	SATURDAY
0	X					X	X
1	X					X	X
2	X					X	X
3	X					X	X
4	X					X	X
5	X	X	X	X	X	X	X
6	X	X	X	X	X	X	X
7	X	X	X	X	X	X	X
8	X	X	X	X	X	X	X
9	X	X	X	X	X	X	X
10	X	X	X	X	X	X	X
11	X	X	X	X	X	X	X
12	X	X	X	X	X	X	X
13	X	X	X	X	X	X	X
14	X	X	X	X	X	X	X
15	X	X	X	X	X	X	X
16	X	X	X	X	X	X	X
17	X	X	X	X	X	X	X
18	X	X	X	X	X	X	X
19	X	X	X	X	X	X	X
20	X	X	X	X	X	X	X
21	X	X	X	X	X	X	X
22	X					X	X
23	X					X	X

SINGLE LANE CLOSURES FOR LANCASTER AVE/M.L.K. JR. BLVD, ADAMS ST, 2ND ST, JACKSON ST

HOUR	SUNDAY	MONDAY	TUESDAY	WEDNESDAY	THURSDAY	FRIDAY	SATURDAY
0							
1							
2							
3							
4							
5							
6		X	X	X	X	X	
7		X	X	X	X	X	
8		X	X	X	X	X	
9		X	X	X	X	X	
10							
11							
12							
13							
14							
15		X	X	X	X	X	
16		X	X	X	X	X	
17		X	X	X	X	X	
18		X	X	X	X	X	
19							
20							
21							
22							
23							

DOUBLE LANE CLOSURES FOR LANCASTER AVE/M.L.K. JR. BLVD, ADAMS ST, 2ND ST, JACKSON ST

HOUR	SUNDAY	MONDAY	TUESDAY	WEDNESDAY	THURSDAY	FRIDAY	SATURDAY
0							
1							
2							
3							
4							
5							
6		X	X	X	X	X	
7		X	X	X	X	X	
8		X	X	X	X	X	
9	X	X	X	X	X	X	X
10	X	X	X	X	X	X	X
11	X	X	X	X	X	X	X
12	X	X	X	X	X	X	X
13	X	X	X	X	X	X	X
14	X	X	X	X	X	X	X
15	X	X	X	X	X	X	X
16	X	X	X	X	X	X	X
17	X	X	X	X	X	X	X
18	X	X	X	X	X	X	X
19	X	X	X	X	X	X	X
20	X	X	X	X	X	X	X
21							
22							
23							

X — LANE CLOSURES NOT PERMITTED

LANE CLOSURES PERMITTED

UNOFFICIAL WEBSITE COPY

N:\31987-004\Contract_Ramp_D\CADD\Traffic\CS0-03.dgn
6/11/2019 2:19:01 PM

ADDENDA / REVISIONS		NOT TO SCALE	REHABILITATION OF I-95, 2ND STREET ON-RAMP IMPROVEMENTS	CONTRACT T201907402	BRIDGE NO.	CONSTRUCTION PHASING, M.O.T. AND EROSION CONTROL PLAN GENERAL NOTES	CS-03 SECTION WRA
				COUNTY NEW CASTLE	DESIGNED BY: WRA		SHEET NO. 212
					CHECKED BY: WRA		

WARNING SIGN LEGEND

ROAD WORK 1 MILE	RIGHT SHOULDER CLOSED 500 FEET	RIGHT SHOULDER CLOSED	ROAD WORK AHEAD	END ROAD WORK	ON INTERSTATE 95
W20-1 48" x 48" (1)	W20-1 48" x 48" (3)	W20-1 48" x 48" (4)	W20-1 48" x 48" (5)	G20-2 48" x 24" (6)	CUSTOM 6" C-SERIES 30" x 36" BLACK ON FO (7)

REGULATORY SIGN LEGEND

BEGIN HIGHER FINES ZONE	END HIGHER FINES ZONE
R2-10 36" x 48" (R1)	R2-11 36" x 48" (R2)

NOTES:

1. SEE INDIVIDUAL PHASING PLANS FOR PLACEMENT OF ADDITIONAL WARNING SIGNS. LOCATION OF ALL PERMANENT WARNING SIGNS SHALL BE COORDINATED WITH THE ENGINEER.
2. ANY EXISTING SIGNS THAT CONFLICT WITH CONSTRUCTION WARNING SIGNS SHALL BE COVERED OR RELOCATED, AS DIRECTED BY THE ENGINEER.
3. ALL PERMANENT WARNING SIGNS SHALL BE POST MOUNTED ON NCHRP REPORT 350 OR MASH APPROVED BREAKAWAY SUPPORTS UNLESS OTHERWISE NOTED ON THESE PLANS, AS DIRECTED BY THE ENGINEER, OR ONE OF THE FOLLOWING CONDITIONS APPLY:
   1) A UTILITY CONFLICT EXISTS THAT PREVENTS THE BREAKAWAY SUPPORTS FROM BEING DRIVEN INTO THE GROUND (ALL UTILITY CONFLICTS MUST BE VERIFIED BY THE INSPECTOR), OR
   2) MATERIAL OTHER THAN COMMON EARTH, SUCH AS CONCRETE, HOT MIX ASPHALT, BRICK, ETC. PREVENTS DRIVING THE POSTS AND SUPPORTS INTO THE GROUND.
4. PERMANENT WARNING SIGNS SHALL BE PLACED ON THE LEFT AND RIGHT SIDE OF THE ROADWAY OF DIVIDED HIGHWAYS WHEN APPLICABLE.

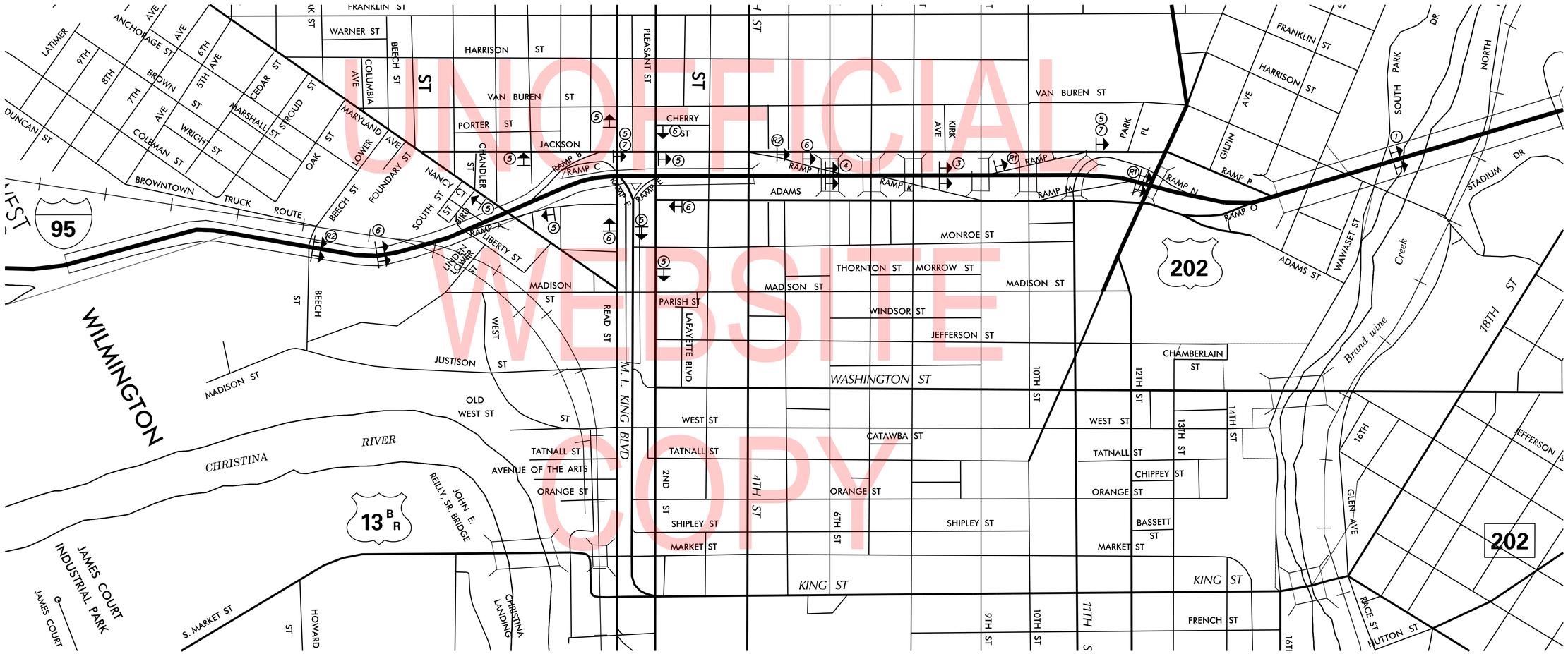

UNOFFICIAL WEBSITE COPY

N:\31987-004\Contract1_Ramp_D\CADD\Traffic\CS0-04.dgn
9/11/2019 2:19:02 PM

ADDENDA / REVISIONS	

SCALE: 0 400 800 1200 FEET

REHABILITATION OF I-95, 2ND STREET ON-RAMP IMPROVEMENTS

CONTRACT	BRIDGE NO.
T201907402	DESIGNED BY: WRA
COUNTY: NEW CASTLE	CHECKED BY: WRA

PERMANENT WARNING SIGN LOCATION PLAN

CS-04
SECTION: WRA
SHEET NO. 213

TEMPORARY PAVEMENT MARKINGS LEGEND

SYMBOL	ITEM	QUANTITY
A	5" SOLID WHITE EPOXY RESIN	158'
B	5" SOLID YELLOW EPOXY RESIN	366'
C	10" SOLID WHITE EPOXY RESIN	210'
E	5" BROKEN WHITE EPOXY RESIN 10' LINE & 30' GAP	95'

CONSTRUCTION PHASING LEGEND

- PROPOSED CONSTRUCTION THIS PHASE
- EXISTING SIGN/PROPOSED TEMPORARY SIGN
- TYPE III BARRICADE
- PLASTIC DRUM
- TRAFFIC FLOW ARROW
- TEMPORARY P.C.C. SAFETY BARRIER, UNPINNED
- TEMPORARY P.C.C. SAFETY BARRIER, PINNED
- TEMPORARY IMPACT ATTENUATOR
- ARROW PANEL
- REMOVE EXISTING STRIPING BY CONTRACTOR
- PROTECTION VEHICLE WITH TRUCK-MOUNTED ATTENUATOR

SEQUENCE OF CONSTRUCTION - PHASE I

1. INSTALL TEMPORARY TRAFFIC CONTROL DEVICES AS SHOWN ON THE PERMANENT WARNING SIGN PLAN AND PHASE I PLANS. SHIFT TRAFFIC TO DESIGNATED TRAVEL LANES.

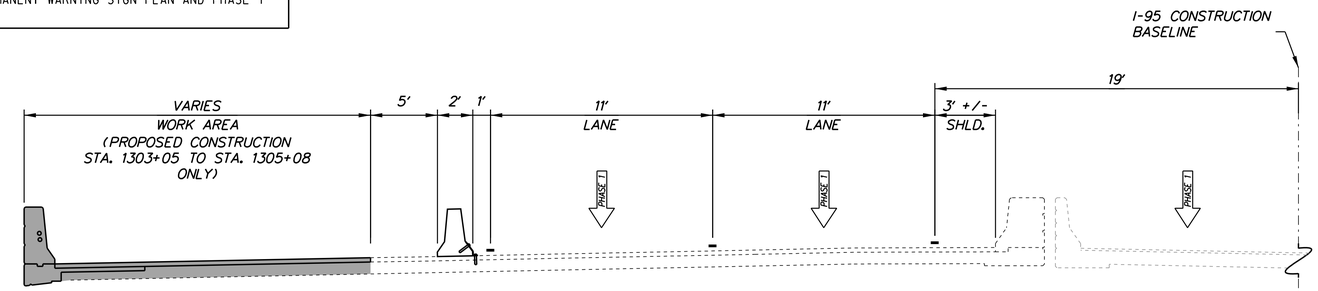

STA. 1299+95 TO STA. 1305+08

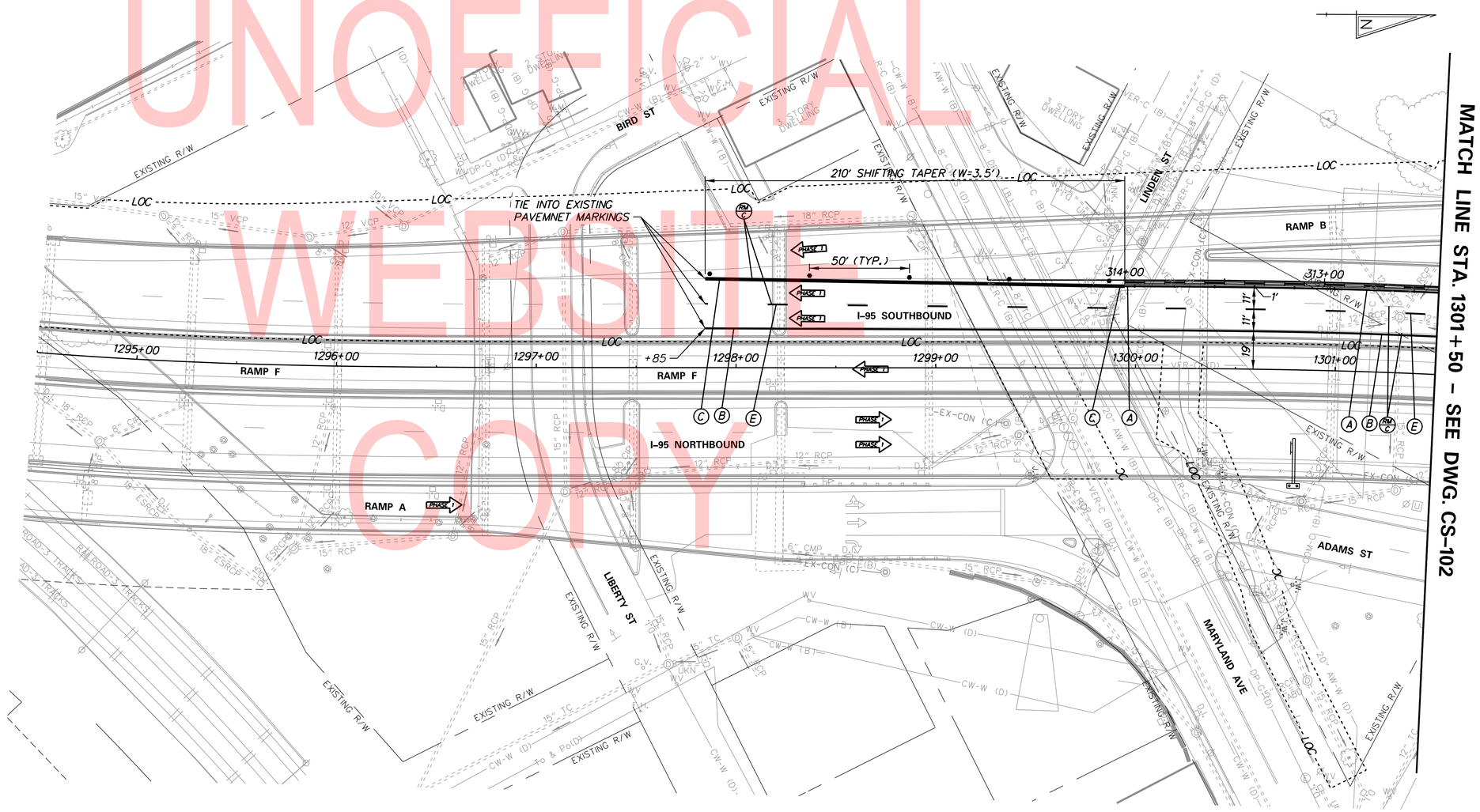

UNOFFICIAL WEBSITE COPY

N:\31987-094\Contract_Ramp_D\CADD\Traffic\CS101.dgn
9/11/2019 2:19:05 PM

ADDENDA / REVISIONS	

SCALE 0 30 60 90 FEET

REHABILITATION OF I-95, 2ND STREET ON-RAMP IMPROVEMENTS

CONTRACT	BRIDGE NO.	1-748S
T201907402	DESIGNED BY: WRA	
COUNTY	CHECKED BY: WRA	
NEW CASTLE		

CONSTRUCTION PHASING, M.O.T., AND EROSION CONTROL PLAN – PHASE 1

CS-101
SECTION
WRA
SHEET NO.
214

CONSTRUCTION PHASING LEGEND

- PROPOSED CONSTRUCTION THIS PHASE
- EXISTING SIGN/PROPOSED TEMPORARY SIGN
- TYPE III BARRICADE
- PLASTIC DRUM
- TRAFFIC FLOW ARROW
- TEMPORARY P.C.C. SAFETY BARRIER, UNPINNED
- TEMPORARY P.C.C. SAFETY BARRIER, PINNED
- TEMPORARY IMPACT ATTENUATOR
- ARROW PANEL
- REMOVE EXISTING STRIPING BY CONTRACTOR
- PROTECTION VEHICLE WITH TRUCK-MOUNTED ATTENUATOR

TEMPORARY PAVEMENT MARKINGS LEGEND

SYMBOL	ITEM	QUANTITY
A	5" SOLID WHITE EPOXY RESIN	718'
B	5" SOLID YELLOW EPOXY RESIN	1224'
C	10" SOLID WHITE EPOXY RESIN	-
E	5" BROKEN WHITE EPOXY RESIN 10' LINE & 30' GAP	180'

TEMPORARY FENCE SCHEDULE

NO.	QTY.	DESCRIPTION	NOTES
1	23'	PORTABLE CHAINLINK FENCE (ITEM 727548)	STA. 500+28, 11' LT. TO STA. 500+50, 13' LT. (+/-)
2	119'	PORTABLE CHAINLINK FENCE (ITEM 727548)	STA. 400+49, 35' LT. TO STA. 401+67, 35' LT. (+/-)
18	5	CONSTRUCTION SAFETY FENCE (ITEM 727006)	STA. 501+56, 26' RT. TO STA. 501+57, 21' RT. (+/-)
19	16	CONSTRUCTION SAFETY FENCE (ITEM 727006)	STA. 501+57, 21' RT. TO STA. 501+71, 21' RT. (+/-)
20	3	CONSTRUCTION SAFETY FENCE (ITEM 727006)	STA. 501+71, 21' RT. TO STA. 501+71, 24' RT. (+/-)
21	80	CONSTRUCTION SAFETY FENCE (ITEM 727006)	STA. 501+71, 24' RT. TO STA. 502+46, 23' RT. (+/-)
22	17	CONSTRUCTION SAFETY FENCE (ITEM 727006)	STA. 502+46, 23' RT. TO STA. 502+66, 22' RT. (+/-)
23	53	CONSTRUCTION SAFETY FENCE (ITEM 727006)	STA. 502+66, 22' RT. TO STA. 503+17, 21' RT. (+/-)
24	10	CONSTRUCTION SAFETY FENCE (ITEM 727006)	STA. 503+17, 21' RT. TO STA. 503+18, 31' RT. (+/-)
25	52	CONSTRUCTION SAFETY FENCE (ITEM 727006)	STA. 502+67, 32' RT. TO STA. 503+18, 31' RT. (+/-)
26	10	CONSTRUCTION SAFETY FENCE (ITEM 727006)	STA. 502+66, 22' RT. TO STA. 502+67, 32' RT. (+/-)

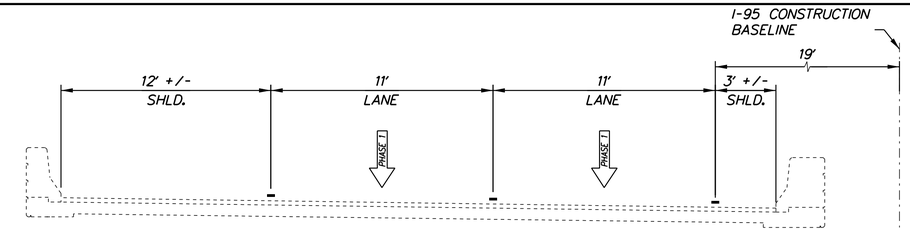

STA. 1305+08 TO STA. 1310+78

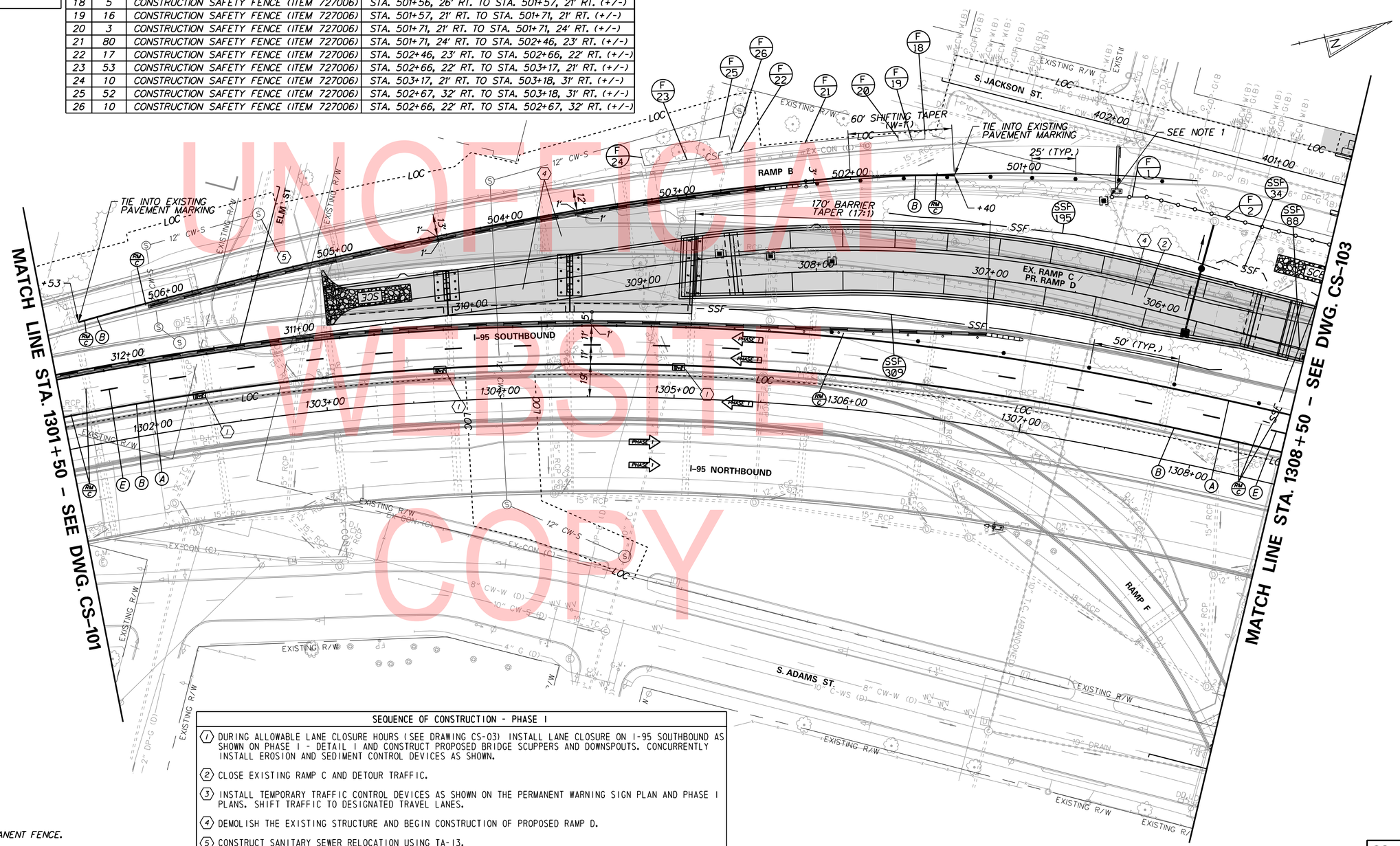

UNOFFICIAL WEBSITE COPY

SEQUENCE OF CONSTRUCTION - PHASE I

1. DURING ALLOWABLE LANE CLOSURE HOURS (SEE DRAWING CS-03) INSTALL LANE CLOSURE ON I-95 SOUTHBOUND AS SHOWN ON PHASE I - DETAIL I AND CONSTRUCT PROPOSED BRIDGE SCUPPERS AND DOWNSPOUTS. CONCURRENTLY INSTALL EROSION AND SEDIMENT CONTROL DEVICES AS SHOWN.
2. CLOSE EXISTING RAMP C AND DETOUR TRAFFIC.
3. INSTALL TEMPORARY TRAFFIC CONTROL DEVICES AS SHOWN ON THE PERMANENT WARNING SIGN PLAN AND PHASE I PLANS. SHIFT TRAFFIC TO DESIGNATED TRAVEL LANES.
4. DEMOLISH THE EXISTING STRUCTURE AND BEGIN CONSTRUCTION OF PROPOSED RAMP D.
5. CONSTRUCT SANITARY SEWER RELOCATION USING TA-13.

NOTES:
1. SECURE TEMPORARY FENCE TO EXISTING PERMANENT FENCE.

ADDENDA / REVISIONS

SCALE 0 30 60 90 FEET

REHABILITATION OF I-95, 2ND STREET ON-RAMP IMPROVEMENTS

CONTRACT	BRIDGE NO.	1-748S, 1-750
T201907402	DESIGNED BY: WRA	
COUNTY		
NEW CASTLE	CHECKED BY: WRA	

CONSTRUCTION PHASING, M.O.T., AND EROSION CONTROL PLAN – PHASE 1

CS-102

SECTION	SHEET NO.
WRA	215

N:\31987-004\Contract_Ramp_D\C4D\Traffic\CS102.dgn
9/17/2019 2:19:06 PM

TEMPORARY PAVEMENT MARKINGS LEGEND

SYMBOL	ITEM	QUANTITY
A	5" SOLID WHITE EPOXY RESIN	413'
B	5" SOLID YELLOW EPOXY RESIN	409'
C	10" SOLID WHITE EPOXY RESIN	-
E	5" BROKEN WHITE EPOXY RESIN 10' LINE & 30' GAP	100'

CONSTRUCTION PHASING LEGEND

- PROPOSED CONSTRUCTION THIS PHASE
- EXISTING SIGN/PROPOSED TEMPORARY SIGN
- TYPE III BARRICADE
- PLASTIC DRUM
- TRAFFIC FLOW ARROW
- TEMPORARY P.C.C. SAFETY BARRIER, UNPINNED
- TEMPORARY P.C.C. SAFETY BARRIER, PINNED
- TEMPORARY IMPACT ATTENUATOR
- ARROW PANEL
- REMOVE EXISTING STRIPING BY CONTRACTOR
- PROTECTION VEHICLE WITH TRUCK-MOUNTED ATTENUATOR

SEQUENCE OF CONSTRUCTION - PHASE I

1. INSTALL TEMPORARY TRAFFIC CONTROL DEVICES AS SHOWN ON THE PERMANENT WARNING SIGN PLAN AND PHASE I PLANS. SHIFT TRAFFIC TO DESIGNATED TRAVEL LANE. CONCURRENTLY INSTALL EROSION AND SEDIMENT CONTROL DEVICES AS SHOWN AND NEW STORM DRAIN SYSTEMS ARE INSTALLED.
2. CLOSE EXISTING RAMP C AND DETOUR TRAFFIC.
3. DEMOLISH THE EXISTING STRUCTURE AND BEGIN CONSTRUCTION OF PROPOSED RAMP D.
4. INSTALL PEDESTRIAN DETOUR AS SHOWN ON DWG. DP-04 OR DP-05 DEPENDING ON AREA WITH WORK (SEE NOTE 2).
5. DURING ALLOWABLE LANE CLOSURE HOURS (SEE DRAWING CS-03) INSTALL LANE CLOSURES ON CITY STREETS AS SHOWN ON PHASE I - DETAIL 2 AND CONSTRUCT ROADWAY WIDENING AND RAMP D TIE-IN.
6. DURING ALLOWABLE LANE CLOSURE HOURS (SEE DRAWING CS-03) PERFORM LANE CLOSURES ON CITY STREETS USING TYPICAL APPLICATIONS AND COMPLETE SIDEWALK AND CURB RAMP WORK.
7. COORDINATE WITH CONTRACTOR FOR CONTRACT NO. 201907002 TO ALLOW FOR CONSTRUCTION OF PROPOSED CANTILEVER SIGN STRUCTURE C-10. INSTALL PERMANENT SIGN PANEL ON CANTILEVER SIGN STRUCTURE C-10 PRIOR TO OPENING RAMP D TO TRAFFIC.

TEMPORARY FENCE SCHEDULE

NO.	QTY.	DESCRIPTION	NOTES
2	119'	PORTABLE CHAINLINK FENCE (ITEM 727548)	STA. 400+49, 35' LT. TO STA. 401+67, 35' LT. (+/-)
3	39'	PORTABLE CHAINLINK FENCE (ITEM 727548)	STA. 1800+17, 49' RT. TO STA. 1800+54, 28' RT. (+/-)
4	207'	PORTABLE CHAINLINK FENCE (ITEM 727548)	STA. 302+08, 45' RT. TO STA. 303+83, 51' RT. (+/-)
5	49'	PORTABLE CHAINLINK FENCE (ITEM 727548)	STA. 303+83, 51' RT. TO STA. 304+32, 51' RT. (+/-)
6	13'	PORTABLE CHAINLINK FENCE (ITEM 727548)	STA. 304+32, 51' RT. TO STA. 304+42, 43' RT. (+/-)
7	20'	PORTABLE CHAINLINK FENCE (ITEM 727548)	STA. 1800+37, 14' LT. TO STA. 1800+56, 14' LT. (+/-)
8	12'	PORTABLE CHAINLINK FENCE (ITEM 727548)	STA. 1800+92, 14' LT. TO STA. 1801+01, 22' LT. (+/-)
9	39'	PORTABLE CHAINLINK FENCE (ITEM 727548)	STA. 1801+01, 22' LT. TO STA. 1801+39, 22' LT. (+/-)
10	54'	PORTABLE CHAINLINK FENCE (ITEM 727548)	STA. 1801+39, 22' LT. TO STA. 1801+93, 27' LT. (+/-)
11	81'	PORTABLE CHAINLINK FENCE (ITEM 727548)	STA. 1801+93, 27' LT. TO STA. 1802+74, 27' LT. (+/-)
12	28'	PORTABLE CHAINLINK FENCE (ITEM 727548)	STA. 1802+74, 27' LT. TO STA. 1802+98, 41' LT. (+/-)
13	22'	PORTABLE CHAINLINK FENCE (ITEM 727548)	STA. 1701+28, 29' LT. TO STA. 1701+49, 29' LT. (+/-)
14	9'	PORTABLE CHAINLINK FENCE (ITEM 727548)	STA. 1802+98, 62' LT. TO STA. 1803+06, 62' LT. (+/-)
27	16'	PORTABLE CHAINLINK FENCE (ITEM 727548)	STA. 302+00, 41' RT. TO STA. 302+10, 47' RT. (+/-)

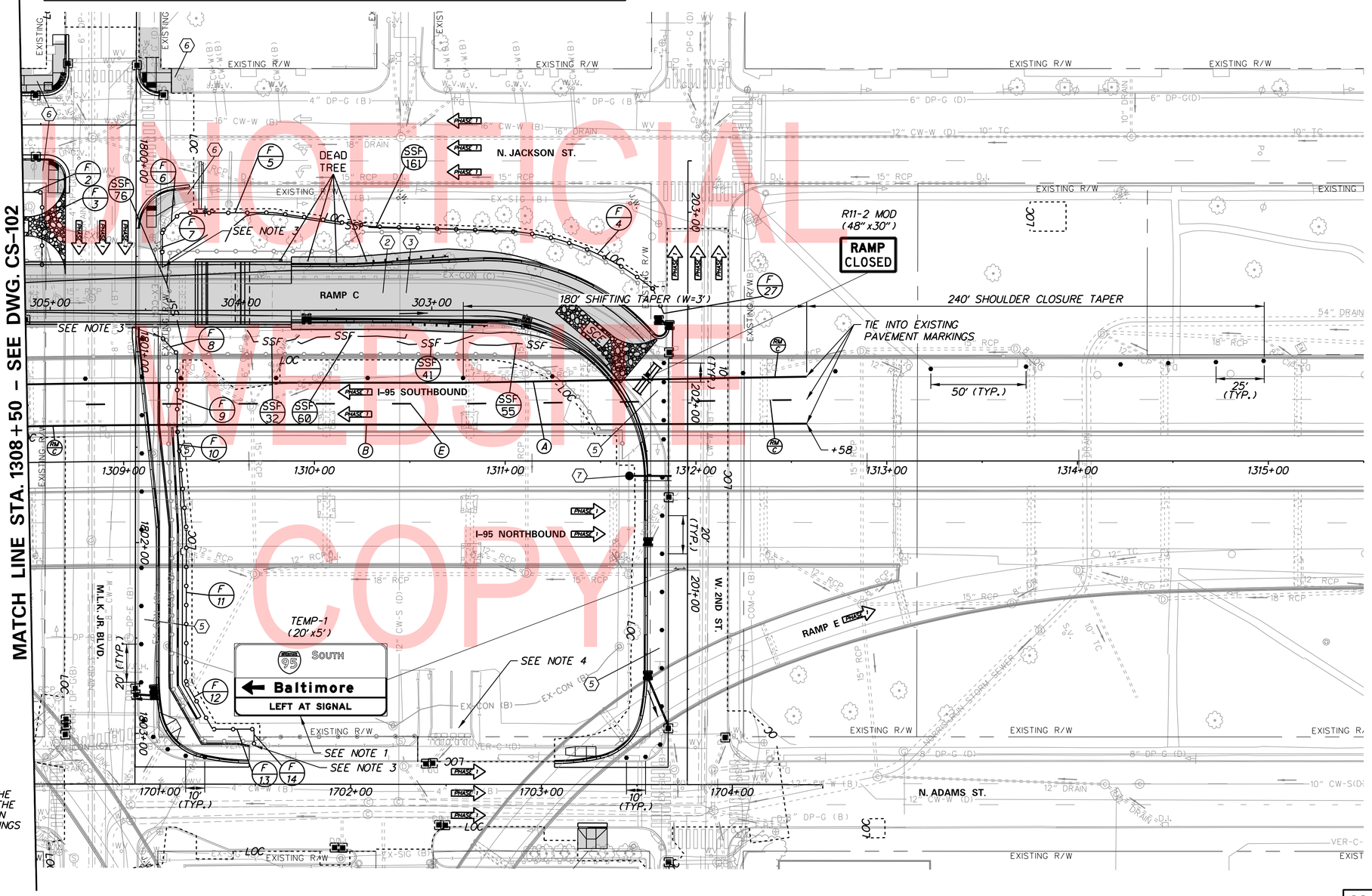

NOTES:

1. INSTALL OVERLAY ON EXISTING SIGN AS SHOWN, UPON CLOSURE OF EX. RAMP C.
2. THE CONTRACTOR SHALL NOT PERFORM WORK ALONG M.L.K. JR. BLVD. AND AT THE INTERSECTION OF M.L.K. JR. BLVD. AND ADAMS ST. OR ALONG 2ND ST. AND AT THE INTERSECTION OF 2ND ST. AND ADAMS ST. SIMULTANEOUSLY SO THAT PEDESTRIAN ACCESS CAN BE MAINTAINED USING THE PEDESTRIAN DETOURS SHOWN ON DRAWINGS DP-04 AND DP-05.
3. SECURE TEMPORARY FENCE TO EXISTING PERMANENT FENCE.
4. MAINTAIN ACCESS TO DART PARKING LOT AT ALL TIMES.

UNOFFICIAL WEBSITE COPY

N:\31987-004\Contract\Ramp_D\CADD\Traffic\CS103.dgn
9/11/2019 2:19:07 PM

ADDENDA / REVISIONS	

SCALE 0 30 60 90 FEET

REHABILITATION OF I-95, 2ND STREET ON-RAMP IMPROVEMENTS

CONTRACT	BRIDGE NO.	1-748S, 1-750
T201907402	DESIGNED BY: WRA	
COUNTY		
NEW CASTLE	CHECKED BY: WRA	

CONSTRUCTION PHASING, M.O.T., AND EROSION CONTROL PLAN – PHASE 1

CS-103

SECTION	SHEET NO.
WRA	216

PRIOR TO SCUPPER WORK
(7 DAYS PRIOR TO BEGINNING OF SCUPPER WORK)

PCMS-1

I-95 S LN CLOSURES STARTING	XX/XX-XX/XX XXP-XXA

DURING SCUPPER WORK

PCMS-1

I-95 S LN CLOSURE AT	EXIT 6 USE I-495 S

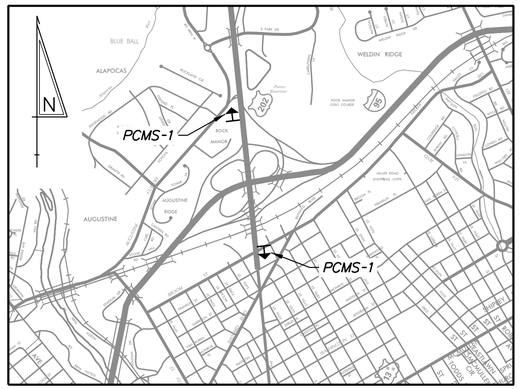

PCMS – US 202 (CONCORD PIKE) AT I-95
(NOT TO SCALE)

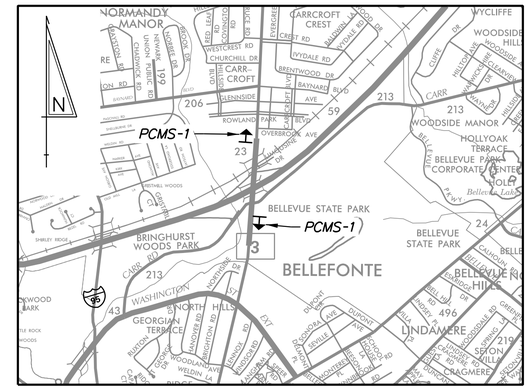

PCMS – SR 3 (MARSH ROAD) AT I-95
(NOT TO SCALE)

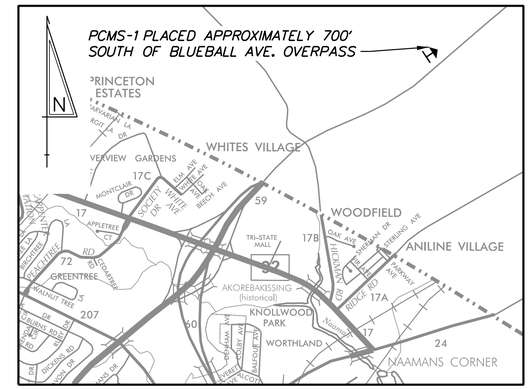

PCMS – I-95 SB APPROACHING I-495
(NOT TO SCALE)

UNOFFICIAL WEBSITE COPY

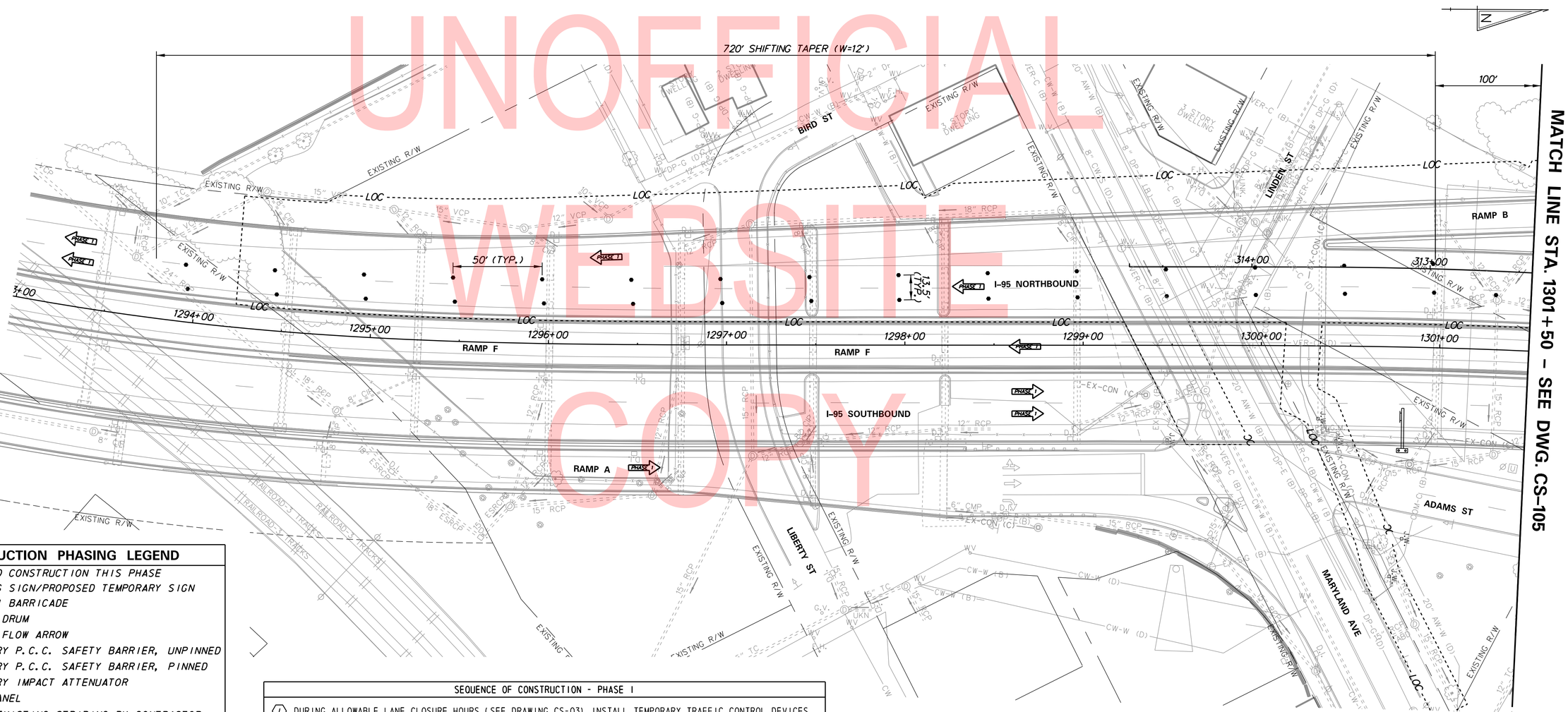

CONSTRUCTION PHASING LEGEND

- PROPOSED CONSTRUCTION THIS PHASE
- EXISTING SIGN/PROPOSED TEMPORARY SIGN
- TYPE III BARRICADE
- PLASTIC DRUM
- TRAFFIC FLOW ARROW
- TEMPORARY P.C.C. SAFETY BARRIER, UNPINNED
- TEMPORARY P.C.C. SAFETY BARRIER, PINNED
- TEMPORARY IMPACT ATTENUATOR
- ARROW PANEL
- REMOVE EXISTING STRIPING BY CONTRACTOR
- PROTECTION VEHICLE WITH TRUCK-MOUNTED ATTENUATOR

SEQUENCE OF CONSTRUCTION - PHASE I

(1) DURING ALLOWABLE LANE CLOSURE HOURS (SEE DRAWING CS-03) INSTALL TEMPORARY TRAFFIC CONTROL DEVICES AS SHOWN ON THIS PLAN. SHIFT TRAFFIC TO DESIGNATED TRAVEL LANES.

ADDENDA / REVISIONS

SCALE 0 30 60 90 FEET

REHABILITATION OF I-95, 2ND STREET ON-RAMP IMPROVEMENTS

CONTRACT T201907402	BRIDGE NO. 1-748S	CONSTRUCTION PHASING, M.O.T., AND EROSION CONTROL PLAN – PHASE 1 – DETAIL 1	CS-104
COUNTY NEW CASTLE	DESIGNED BY: WRA		SECTION WRA
	CHECKED BY: WRA		SHEET NO. 217

N:\31987-094\Contract_Ramp_D\CADD\Traffic\CS104.dgn
9/12/2019 9:37:40 AM

CONSTRUCTION PHASING LEGEND

- PROPOSED CONSTRUCTION THIS PHASE
- EXISTING SIGN/PROPOSED TEMPORARY SIGN
- TYPE III BARRICADE
- PLASTIC DRUM
- TRAFFIC FLOW ARROW
- TEMPORARY P.C.C. SAFETY BARRIER, UNPINNED
- TEMPORARY P.C.C. SAFETY BARRIER, PINNED
- TEMPORARY IMPACT ATTENUATOR
- ARROW PANEL
- REMOVE EXISTING STRIPING BY CONTRACTOR
- PROTECTION VEHICLE WITH TRUCK-MOUNTED ATTENUATOR

SEQUENCE OF CONSTRUCTION - PHASE I

1. DURING ALLOWABLE LANE CLOSURE HOURS (SEE DRAWING CS-03) INSTALL TEMPORARY TRAFFIC CONTROL DEVICES AS SHOWN ON THIS PLAN. SHIFT TRAFFIC TO DESIGNATED TRAVEL LANES.
2. CONSTRUCT PROPOSED BRIDGE SCUPPERS AND DOWNSPOUTS (SEE NOTE 1).

NOTES:

1. PROTECT EACH INDIVIDUAL SCUPPER WORK AREA WITH A TRUCK MOUNTED ATTENUATOR AS WORK PROGRESSES TO EACH SCUPPER.

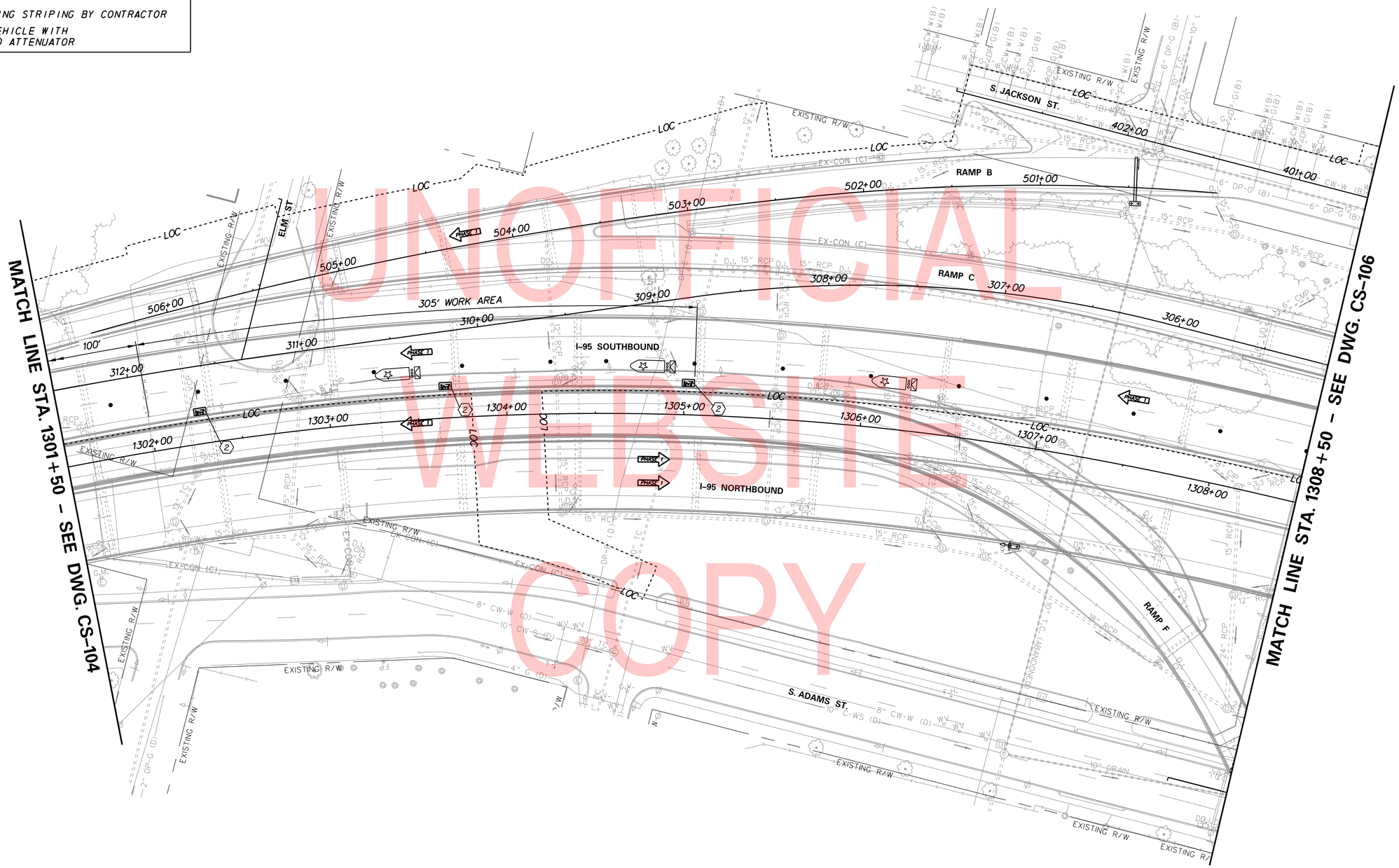

UNOFFICIAL WEBSITE COPY

ADDENDA / REVISIONS	

SCALE: 0 30 60 90 FEET

REHABILITATION OF I-95, 2ND STREET ON-RAMP IMPROVEMENTS

CONTRACT	BRIDGE NO.	1-748S, 1-750
T201907402	DESIGNED BY: WRA	
COUNTY		
NEW CASTLE	CHECKED BY: WRA	

CONSTRUCTION PHASING, M.O.T., AND EROSION CONTROL PLAN – PHASE 1 – DETAIL 1

CS-105
SECTION
WRA
SHEET NO.
218

N:\31987-004\Contract_Ramp_D\CADD\Traffic\CS105.dgn
9/12/2019 8:36:57 AM

CONSTRUCTION PHASING LEGEND

- PROPOSED CONSTRUCTION THIS PHASE
- EXISTING SIGN/PROPOSED TEMPORARY SIGN
- TYPE III BARRICADE
- PLASTIC DRUM
- TRAFFIC FLOW ARROW
- TEMPORARY P.C.C. SAFETY BARRIER, UNPINNED
- TEMPORARY P.C.C. SAFETY BARRIER, PINNED
- TEMPORARY IMPACT ATTENUATOR
- ARROW PANEL
- REMOVE EXISTING STRIPING BY CONTRACTOR
- PROTECTION VEHICLE WITH TRUCK-MOUNTED ATTENUATOR

SEQUENCE OF CONSTRUCTION - PHASE 1

(1) DURING ALLOWABLE LANE CLOSURE HOURS (SEE DRAWING CS-03) INSTALL TEMPORARY TRAFFIC CONTROL DEVICES AS SHOWN ON THIS PLAN. SHIFT TRAFFIC TO DESIGNATED TRAVEL LANES.

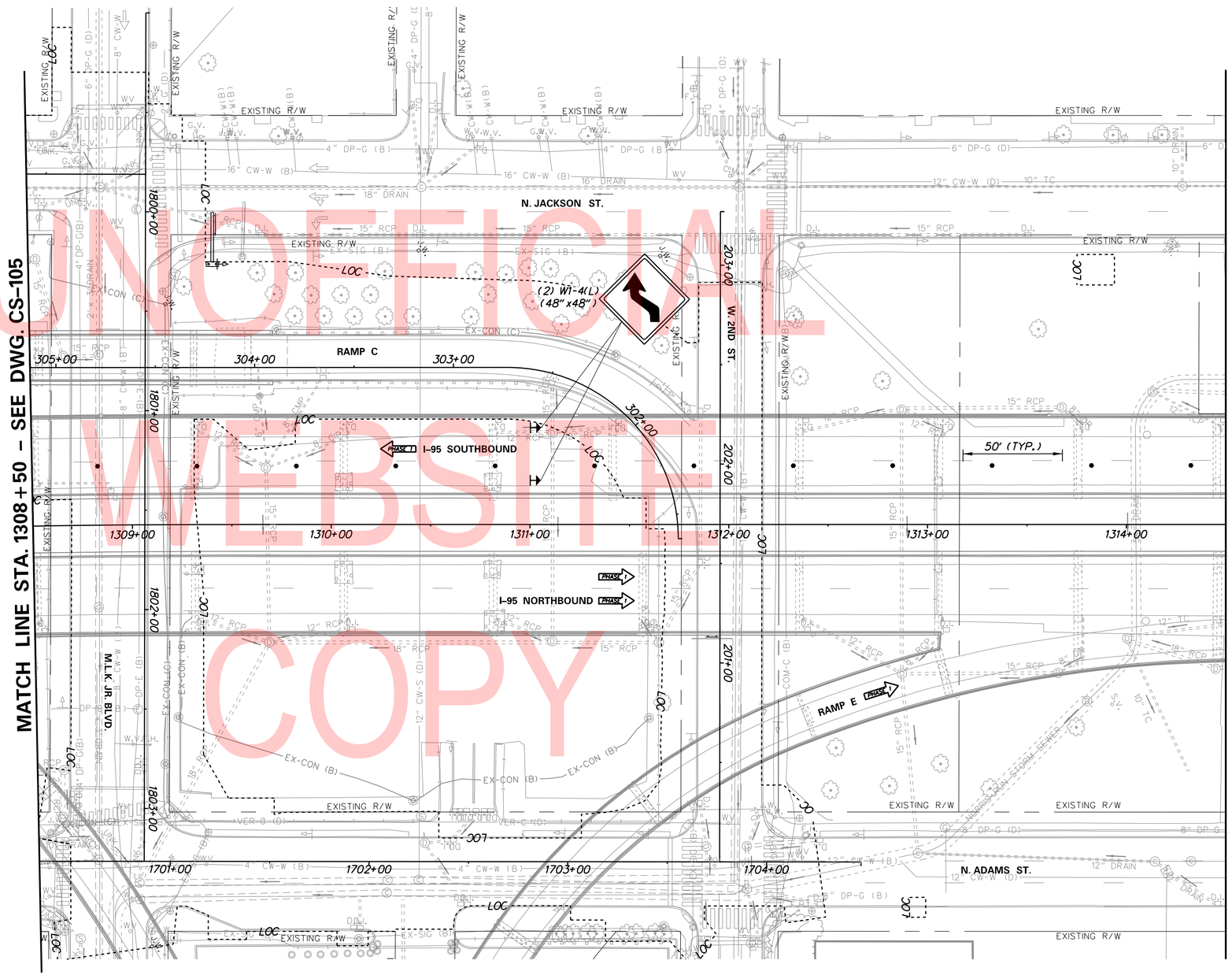

UNOFFICIAL WEBSITE COPY

ADDENDA / REVISIONS	

SCALE 0 30 60 90 FEET

REHABILITATION OF I-95, 2ND STREET ON-RAMP IMPROVEMENTS

CONTRACT	BRIDGE NO.	1-748S, 1-750
T201907402	DESIGNED BY: WRA	
COUNTY		
NEW CASTLE	CHECKED BY: WRA	

CONSTRUCTION PHASING, M.O.T., AND EROSION CONTROL PLAN – PHASE 1 – DETAIL 1

CS-106
SECTION
WRA
SHEET NO.
219

h:\31987-004\Contract_Ramp_D\CADD\Traffic\CS106.dgn
9/17/2019 2:19:11 PM

CONSTRUCTION PHASING LEGEND

- PROPOSED CONSTRUCTION THIS PHASE
- EXISTING SIGN/PROPOSED TEMPORARY SIGN
- TYPE III BARRICADE
- PLASTIC DRUM
- TRAFFIC FLOW ARROW
- TEMPORARY P.C.C. SAFETY BARRIER, UNPINNED
- TEMPORARY P.C.C. SAFETY BARRIER, PINNED
- TEMPORARY IMPACT ATTENUATOR
- ARROW PANEL
- REMOVE EXISTING STRIPING BY CONTRACTOR
- PROTECTION VEHICLE WITH TRUCK-MOUNTED ATTENUATOR

SEQUENCE OF CONSTRUCTION - PHASE I

(1) DURING ALLOWABLE LANE CLOSURE HOURS (SEE DRAWING CS-03) INSTALL TEMPORARY TRAFFIC CONTROL DEVICES AS SHOWN ON THIS PLAN. SHIFT TRAFFIC TO DESIGNATED TRAVEL LANES.

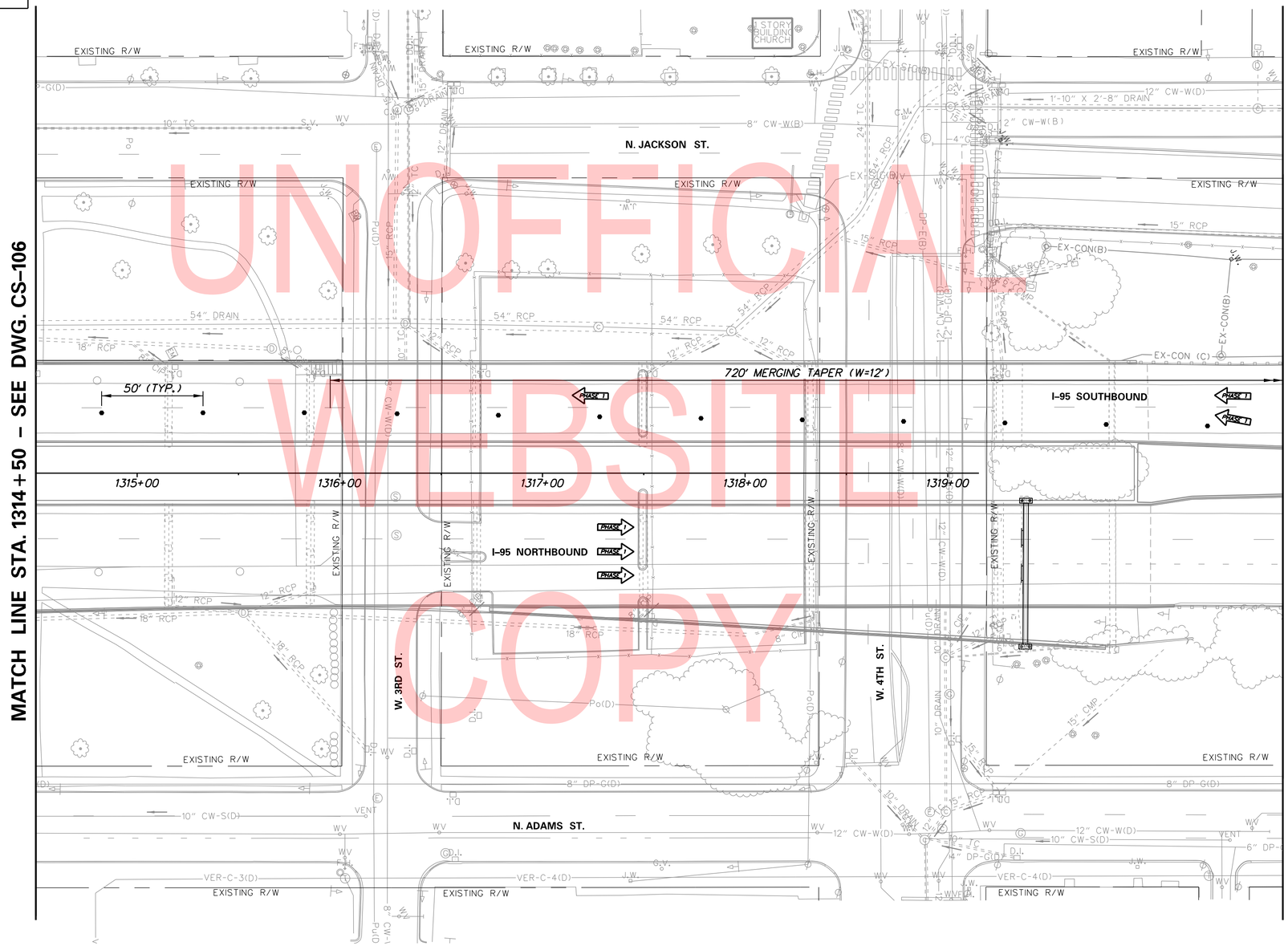

UNOFFICIAL WEBSITE COPY

N:\31987-004\Contract_Ramp_D\CADD\Traffic\CS107.dgn
9/11/2019 2:19:12 PM

ADDENDA / REVISIONS	

SCALE 0 30 60 90 FEET

REHABILITATION OF I-95, 2ND STREET ON-RAMP IMPROVEMENTS

CONTRACT	BRIDGE NO.	1-748S
T201907402	DESIGNED BY: WRA	
COUNTY		
NEW CASTLE	CHECKED BY: WRA	

CONSTRUCTION PHASING, M.O.T., AND EROSION CONTROL PLAN – PHASE 1 – DETAIL 1

CS-107
SECTION
WRA
SHEET NO.
220

CONSTRUCTION PHASING LEGEND

- PROPOSED CONSTRUCTION THIS PHASE
- EXISTING SIGN/PROPOSED TEMPORARY SIGN
- TYPE III BARRICADE
- PLASTIC DRUM
- TRAFFIC FLOW ARROW
- TEMPORARY P.C.C. SAFETY BARRIER, UNPINNED
- TEMPORARY P.C.C. SAFETY BARRIER, PINNED
- TEMPORARY IMPACT ATTENUATOR
- ARROW PANEL
- REMOVE EXISTING STRIPING BY CONTRACTOR
- PROTECTION VEHICLE WITH TRUCK-MOUNTED ATTENUATOR

SEQUENCE OF CONSTRUCTION - PHASE I

(1) DURING ALLOWABLE LANE CLOSURE HOURS (SEE DRAWING CS-03) INSTALL TEMPORARY TRAFFIC CONTROL DEVICES AS SHOWN ON THIS PLAN. SHIFT TRAFFIC TO DESIGNATED TRAVEL LANES.

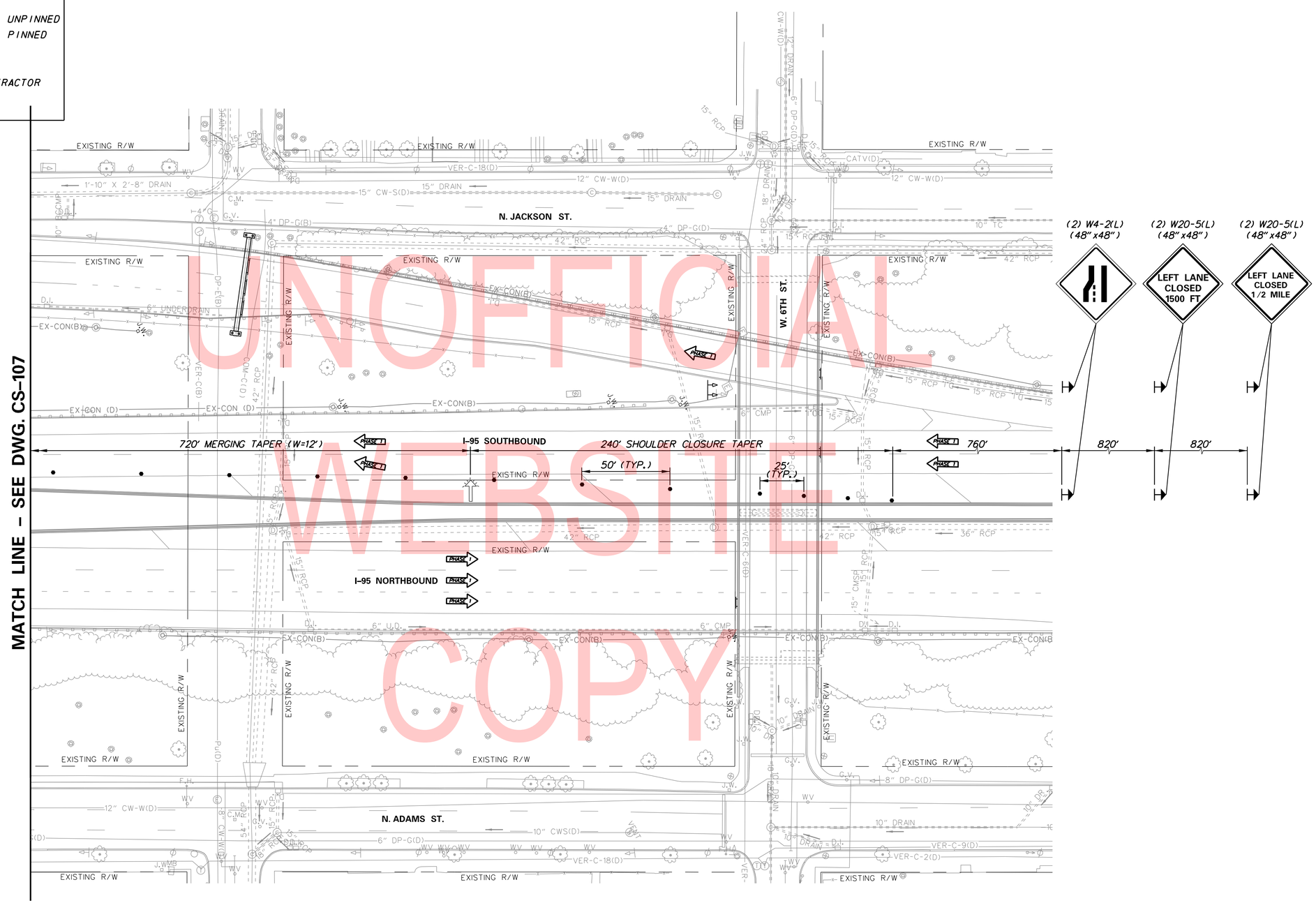

UNOFFICIAL WEBSITE COPY

N:\31987-094\Contract_Ramp_D\CADD\Traffic\CS108.dgn
9/11/2019 2:19:13 PM

ADDENDA / REVISIONS	

SCALE 0 30 60 90 FEET

REHABILITATION OF I-95, 2ND STREET ON-RAMP IMPROVEMENTS

CONTRACT	BRIDGE NO.	
T201907402	DESIGNED BY: WRA	
COUNTY	CHECKED BY: WRA	
NEW CASTLE		

CONSTRUCTION PHASING, M.O.T., AND EROSION CONTROL PLAN – PHASE 1 – DETAIL 1

CS-108
SECTION
WRA
SHEET NO.
221

CONSTRUCTION PHASING LEGEND

- PROPOSED CONSTRUCTION THIS PHASE
- EXISTING SIGN/PROPOSED TEMPORARY SIGN
- TYPE III BARRICADE
- PLASTIC DRUM
- TRAFFIC FLOW ARROW
- TEMPORARY P.C.C. SAFETY BARRIER, UNPINNED
- TEMPORARY P.C.C. SAFETY BARRIER, PINNED
- TEMPORARY IMPACT ATTENUATOR
- ARROW PANEL
- REMOVE EXISTING STRIPING BY CONTRACTOR
- PROTECTION VEHICLE WITH TRUCK-MOUNTED ATTENUATOR

SEQUENCE OF CONSTRUCTION - PHASE 1

1. DURING ALLOWABLE LANE CLOSURE HOURS (SEE DRAWING CS-03) INSTALL TEMPORARY TRAFFIC CONTROL DEVICES AS SHOWN ON THIS PLAN. SHIFT TRAFFIC TO DESIGNATED TRAVEL LANES. CONCURRENTLY MAINTAIN EROSION AND SEDIMENT CONTROL DEVICES INCLUDING ALL INLET PROTECTION.
2. CONSTRUCT ROADWAY WIDENING AND RAMP TIE-IN.

NOTES:

1. *REFER TO PHASE 1 PLANS FOR TEMPORARY TRAFFIC CONTROL DEVICES ALONG I-95 AND RAMP B.*
2. *MAINTAIN ACCESS TO DART PARKING LOT AT ALL TIMES.*

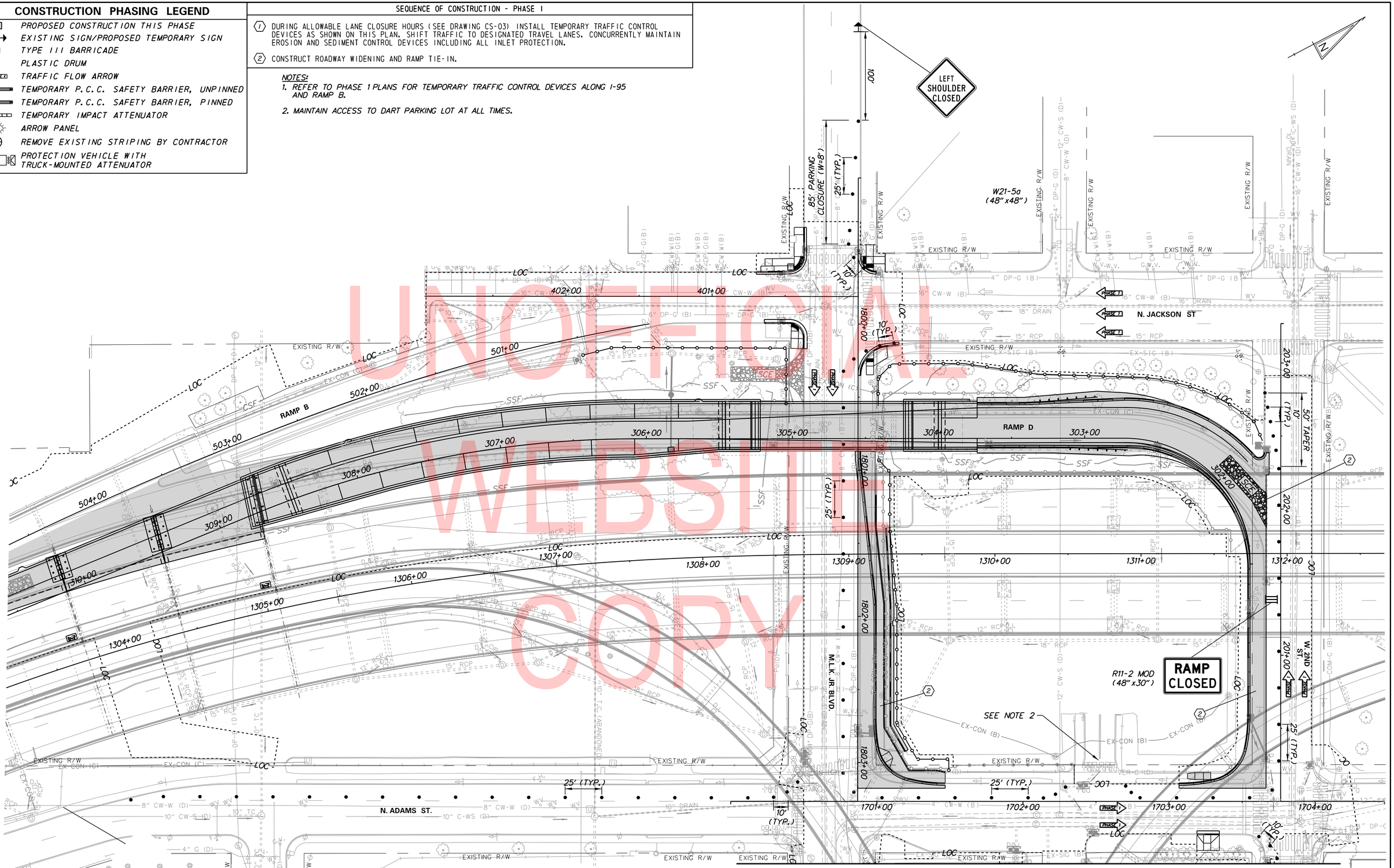

UNOFFICIAL WEBSITE COPY

MATCH LINE – SEE DWG. CS–110

ADDENDA / REVISIONS	

SCALE: 0 30 60 90 FEET

REHABILITATION OF I-95, 2ND STREET ON-RAMP IMPROVEMENTS

CONTRACT	BRIDGE NO.	1–748S, 1–750
T201907402	DESIGNED BY: WRA	
COUNTY		
NEW CASTLE	CHECKED BY: WRA	

CONSTRUCTION PHASING, M.O.T., AND EROSION CONTROL PLAN – PHASE 1 – DETAIL 2

CS–109
SECTION
WRA
SHEET NO.
222

n:\31987-004\Contract_Ramp_D\CADD\Traffic\CS109.dgn
9/17/2019 2:19:14 PM

CONSTRUCTION PHASING LEGEND

- PROPOSED CONSTRUCTION THIS PHASE
- EXISTING SIGN/PROPOSED TEMPORARY SIGN
- TYPE III BARRICADE
- PLASTIC DRUM
- TRAFFIC FLOW ARROW
- TEMPORARY P.C.C. SAFETY BARRIER, UNPINNED
- TEMPORARY P.C.C. SAFETY BARRIER, PINNED
- TEMPORARY IMPACT ATTENUATOR
- ARROW PANEL
- REMOVE EXISTING STRIPING BY CONTRACTOR
- PROTECTION VEHICLE WITH TRUCK-MOUNTED ATTENUATOR

SEQUENCE OF CONSTRUCTION - PHASE 1

(7) DURING ALLOWABLE LANE CLOSURE HOURS (SEE DRAWING CS-03) INSTALL TEMPORARY TRAFFIC CONTROL DEVICES AS SHOWN ON THIS PLAN. SHIFT TRAFFIC TO DESIGNATED TRAVEL LANES.

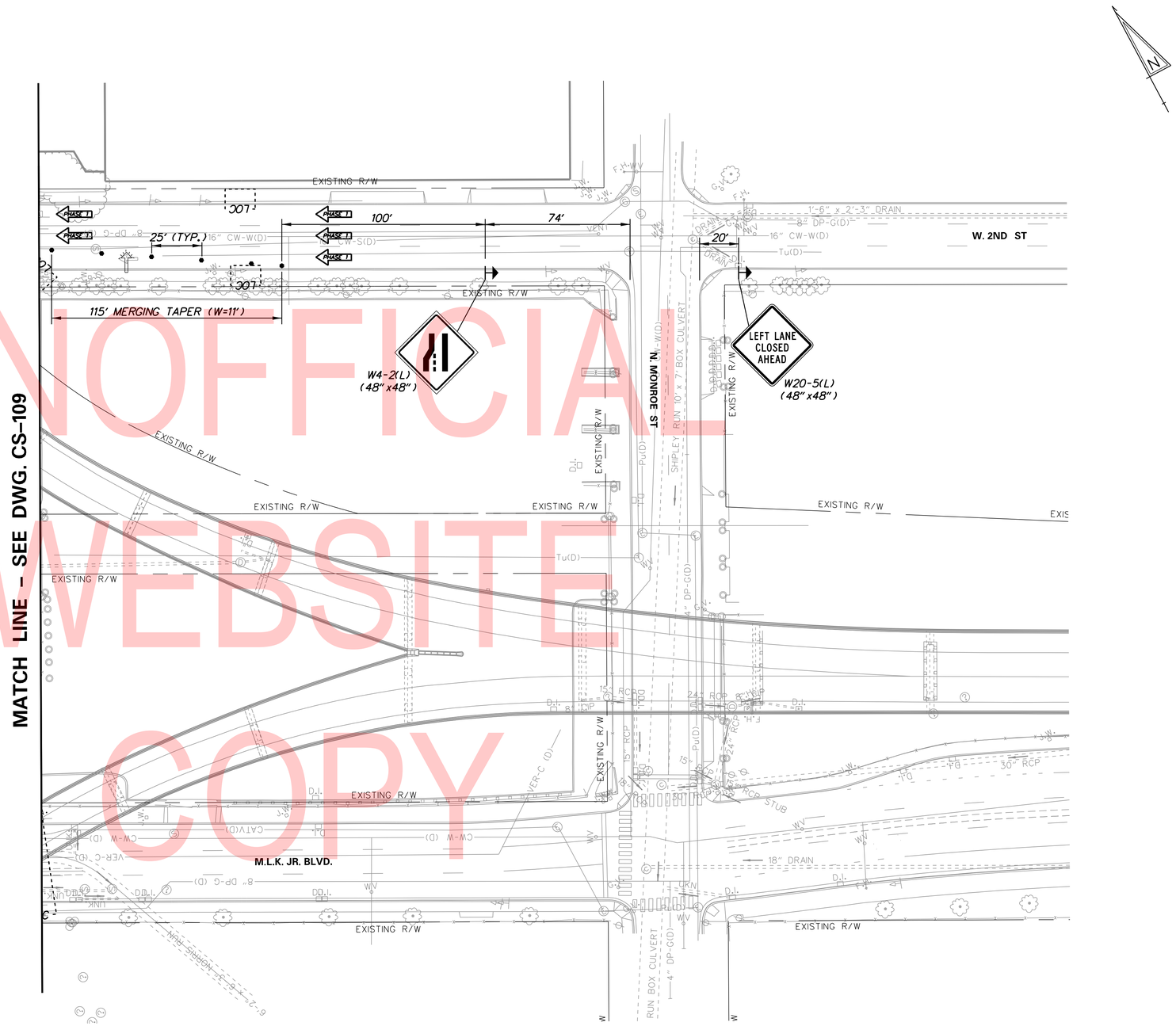

UNOFFICIAL WEBSITE COPY

ADDENDA / REVISIONS	

SCALE 0 30 60 90 FEET

REHABILITATION OF I-95, 2ND STREET ON-RAMP IMPROVEMENTS

CONTRACT	BRIDGE NO.	
T201907402	DESIGNED BY: WRA	
COUNTY		
NEW CASTLE	CHECKED BY: WRA	

CONSTRUCTION PHASING, M.O.T., AND EROSION CONTROL PLAN – PHASE 1 – DETAIL 2

CS-110
SECTION
WRA
SHEET NO.
223

h:\31987-004\Contract_Ramp_D\CADD\Traffic\CS110.dgn
9/17/2019 2:19:15 PM

CONSTRUCTION PHASING LEGEND

- PROPOSED CONSTRUCTION THIS PHASE
- EXISTING SIGN/PROPOSED TEMPORARY SIGN
- TYPE III BARRICADE
- PLASTIC DRUM
- TRAFFIC FLOW ARROW
- TEMPORARY P.C.C. SAFETY BARRIER, UNPINNED
- TEMPORARY P.C.C. SAFETY BARRIER, PINNED
- TEMPORARY IMPACT ATTENUATOR
- ARROW PANEL
- REMOVE EXISTING STRIPING BY CONTRACTOR
- PROTECTION VEHICLE WITH TRUCK-MOUNTED ATTENUATOR

TEMPORARY PAVEMENT MARKINGS LEGEND

SYMBOL	ITEM	QUANTITY
A	5" SOLID WHITE EPOXY RESIN	328'
B	5" SOLID YELLOW EPOXY RESIN	334'
C	10" SOLID WHITE EPOXY RESIN	-
E	5" BROKEN WHITE EPOXY RESIN 10' LINE & 30' GAP	80'

SEQUENCE OF CONSTRUCTION - PHASE 2

1. INSTALL TEMPORARY TRAFFIC CONTROL DEVICES AS SHOWN ON THE PERMANENT WARNING SIGN PLAN AND PHASE 2 PLANS. SHIFT TRAFFIC TO DESIGNATED TRAVEL LANES.

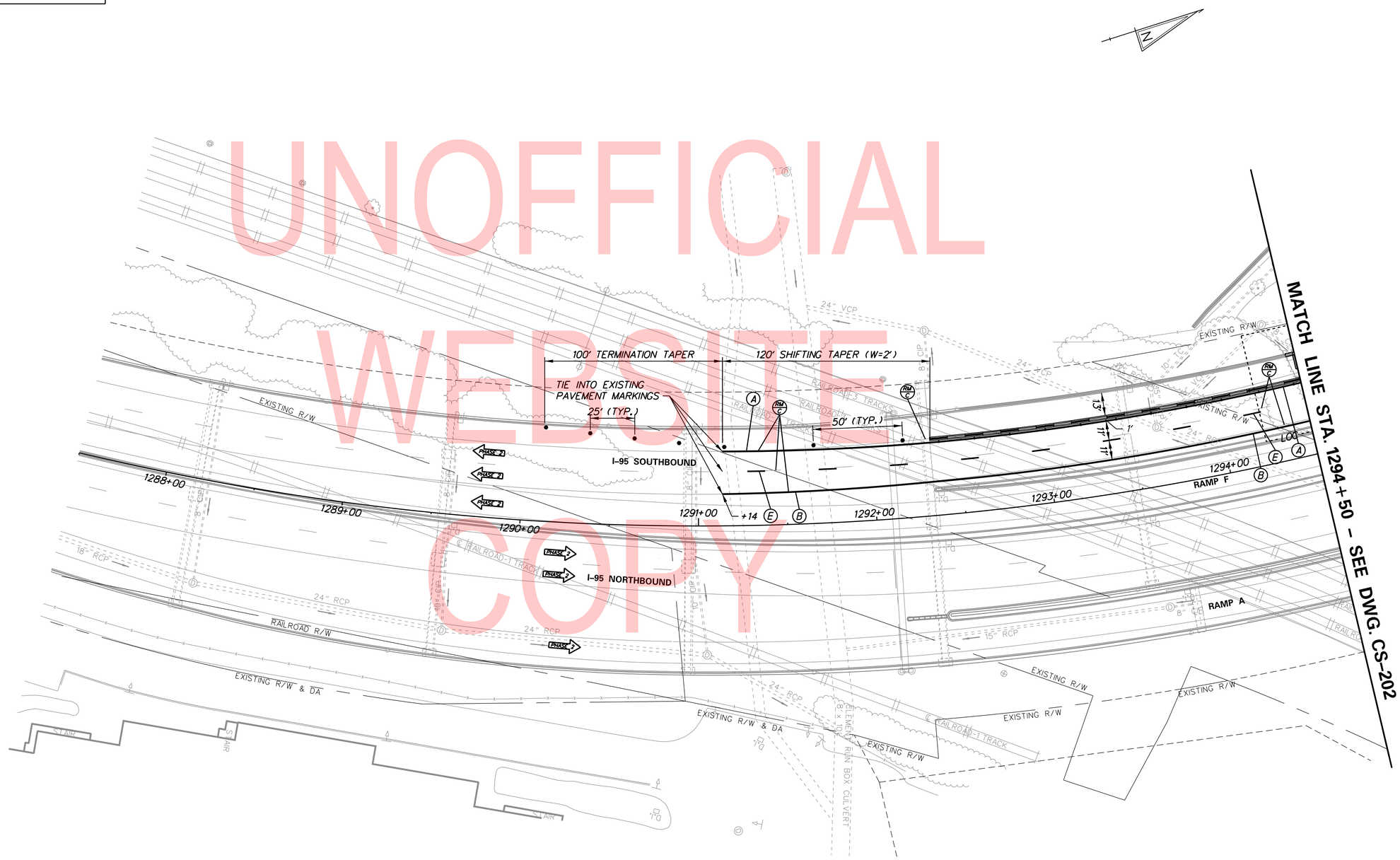

UNOFFICIAL WEBSITE COPY

N:\31987-004\Contract_Ramp_D\CADD\Traffic\CS201.dgn
9/11/2019 2:19:16 PM

ADDENDA / REVISIONS

SCALE 0 30 60 90 FEET

REHABILITATION OF I-95, 2ND STREET ON-RAMP IMPROVEMENTS

CONTRACT	BRIDGE NO.	1-748S
T201907402	DESIGNED BY: WRA	
COUNTY		
NEW CASTLE	CHECKED BY: WRA	

CONSTRUCTION PHASING, M.O.T., AND EROSION CONTROL PLAN - PHASE 2

CS-201
SECTION
WRA
SHEET NO.
224

TEMPORARY PAVEMENT MARKINGS LEGEND

SYMBOL	ITEM	QUANTITY
A	5" SOLID WHITE EPOXY RESIN	545'
B	5" SOLID YELLOW EPOXY RESIN	541'
C	10" SOLID WHITE EPOXY RESIN	-
E	5" BROKEN WHITE EPOXY RESIN 10' LINE & 30' GAP	140'

CONSTRUCTION PHASING LEGEND

- PROPOSED CONSTRUCTION THIS PHASE
- EXISTING SIGN/PROPOSED TEMPORARY SIGN
- TYPE III BARRICADE
- PLASTIC DRUM
- TRAFFIC FLOW ARROW
- TEMPORARY P.C.C. SAFETY BARRIER, UNPINNED
- TEMPORARY P.C.C. SAFETY BARRIER, PINNED
- TEMPORARY IMPACT ATTENUATOR
- ARROW PANEL
- REMOVE EXISTING STRIPING BY CONTRACTOR
- PROTECTION VEHICLE WITH TRUCK-MOUNTED ATTENUATOR

SEQUENCE OF CONSTRUCTION - PHASE 2

1. MAINTAIN TEMPORARY TRAFFIC CONTROL DEVICES FROM PHASE 1 FOR I-95 SOUTHBOUND, AS SHOWN ON PLAN.
2. CLOSE EXISTING RAMP B AND DETOUR TRAFFIC.
3. INSTALL ADDITIONAL TEMPORARY TRAFFIC CONTROL DEVICES AS SHOWN ON THE PERMANENT WARNING SIGN PLAN AND PHASE 2 PLANS. SHIFT TRAFFIC TO DESIGNATED TRAVEL LANES.
4. DEMOLISH THE EXISTING STRUCTURE AND CONTINUE CONSTRUCTION OF PROPOSED RAMP D.

NOTES:

1. SUMP PITS SHALL BE INSTALLED IN ACCORDANCE WITH DELDOT STANDARD DETAIL E-7 AS MODIFIED IN THE FIELD WITH APPROVAL OF THE ENGINEER. ALL DEWATERING SHALL BE PERFORMED IN ACCORDANCE WITH DIVISION 900 OF THE DELDOT STANDARD SPECIFICATIONS.

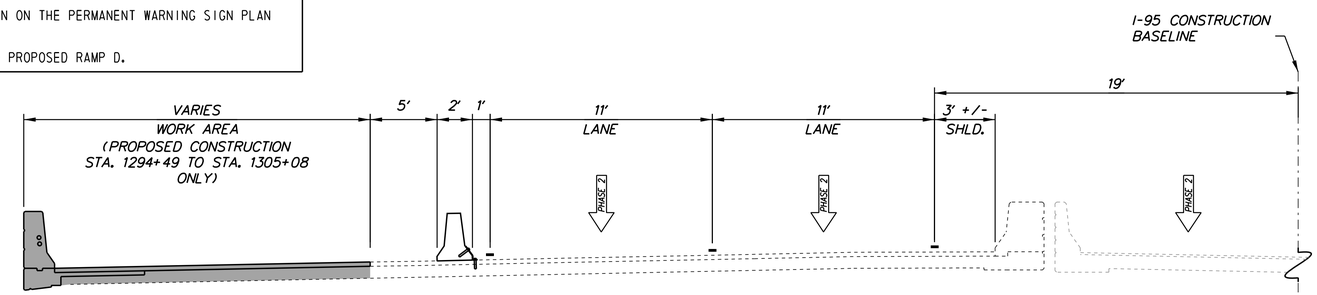

STA. 1292+33 TO STA. 1305+08

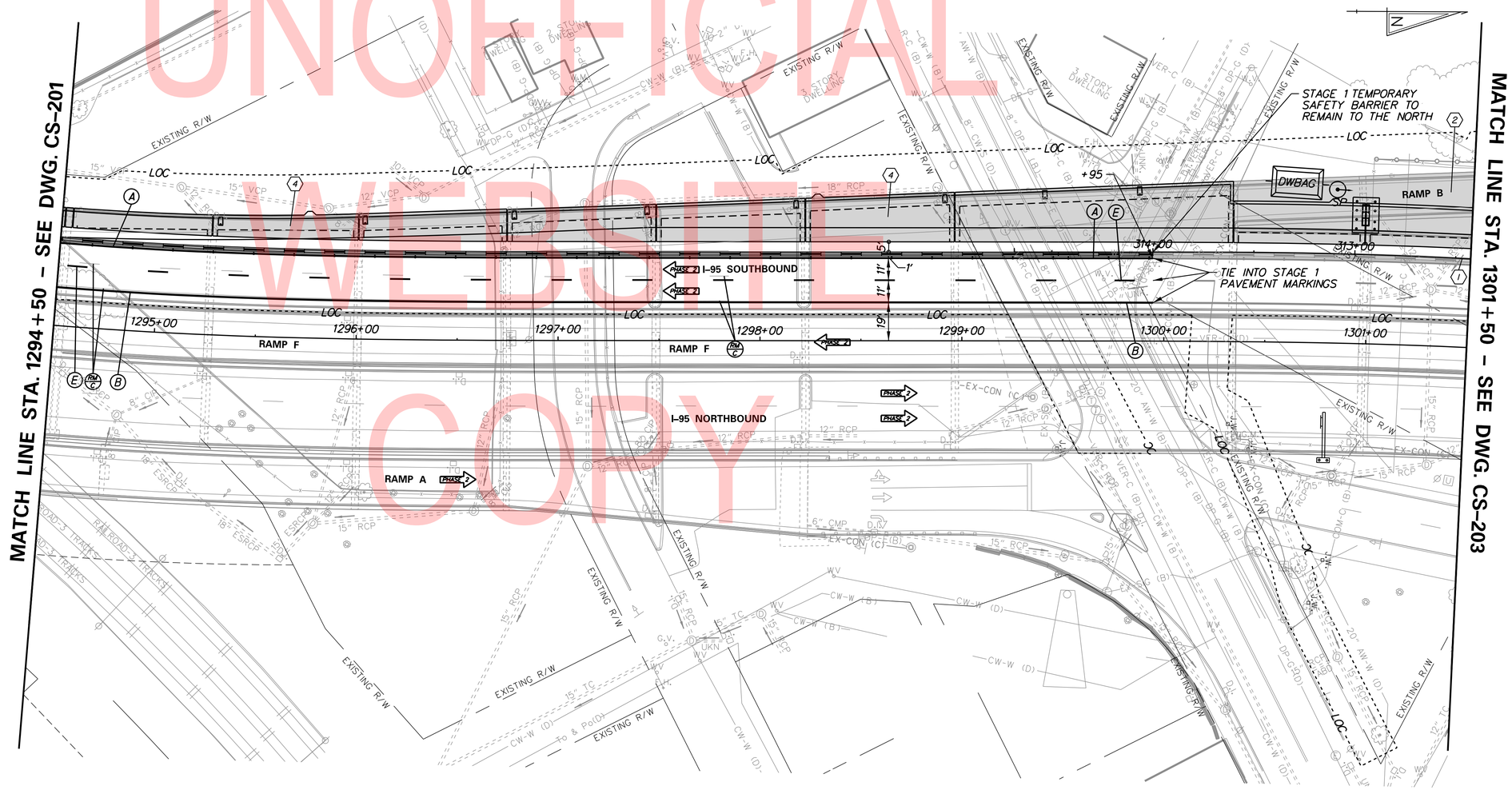

UNOFFICIAL WEBSITE COPY

N:\31987-004\Contract_Ramp_D\CADD\Traffic\CS202.dgn
9/11/2019 2:19:17 PM

ADDENDA / REVISIONS	SCALE 0 30 60 90 FEET	REHABILITATION OF I-95, 2ND STREET ON-RAMP IMPROVEMENTS	CONTRACT T201907402	BRIDGE NO. 1-748S	CONSTRUCTION PHASING, M.O.T., AND EROSION CONTROL PLAN - PHASE 2	CS-202
			COUNTY NEW CASTLE	DESIGNED BY: WRA		SECTION WRA
				CHECKED BY: WRA		SHEET NO. 225

CONSTRUCTION PHASING LEGEND

- PROPOSED CONSTRUCTION THIS PHASE
- EXISTING SIGN/PROPOSED TEMPORARY SIGN
- TYPE III BARRICADE
- PLASTIC DRUM
- TRAFFIC FLOW ARROW
- TEMPORARY P.C.C. SAFETY BARRIER, UNPINNED
- TEMPORARY P.C.C. SAFETY BARRIER, PINNED
- TEMPORARY IMPACT ATTENUATOR
- ARROW PANEL
- REMOVE EXISTING STRIPING BY CONTRACTOR
- PROTECTION VEHICLE WITH TRUCK-MOUNTED ATTENUATOR

NOTES:

1. SECURE TEMPORARY FENCE TO EXISTING PERMANENT FENCE.
2. SUMP PITS SHALL BE INSTALLED IN ACCORDANCE WITH DELDOT STANDARD DETAIL E-7 AS MODIFIED IN THE FIELD WITH APPROVAL OF THE ENGINEER. ALL DEWATERING SHALL BE PERFORMED IN ACCORDANCE WITH DIVISION 900 OF THE DELDOT STANDARD SPECIFICATIONS.

SEQUENCE OF CONSTRUCTION - PHASE 2

1. MAINTAIN TEMPORARY TRAFFIC CONTROL DEVICES FROM PHASE 1 FOR I-95 SOUTHBOUND, AS SHOWN ON PLAN.
2. CLOSE EXISTING RAMP B AND DETOUR TRAFFIC.
3. MAINTAIN CLOSURE OF EXISTING RAMP C AND DETOUR TRAFFIC. CONTINUE DEMOLITION OF THE EXISTING STRUCTURE AND CONSTRUCTION OF PROPOSED RAMP D.
4. INSTALL ADDITIONAL TEMPORARY TRAFFIC CONTROL DEVICES AS SHOWN ON THE PERMANENT WARNING SIGN PLAN AND PHASE 2 PLANS. SHIFT TRAFFIC TO DESIGNATED TRAVEL LANES.
5. PRIOR TO INSTALLING TEMPORARY FENCING FOR PHASE 2 AND CLOSING OF CUL-DE-SAC, INSTALL TEMPORARY SIGNING, TRAFFIC CONTROL DEVICES, AND TEMPORARY TURNAROUND.
6. DEMOLISH THE EXISTING STRUCTURE AND ROADWAY AND CONTINUE CONSTRUCTION OF PROPOSED RAMP D.
7. DURING ALLOWABLE LANE CLOSURE HOURS (SEE DRAWING CS-03) INSTALL LANE CLOSURES ON CITY STREETS AS SHOWN ON PHASE 2 - DETAIL 1 AND REMOVE CURB BUMPOUT AND CONSTRUCT ROADWAY WIDENING.

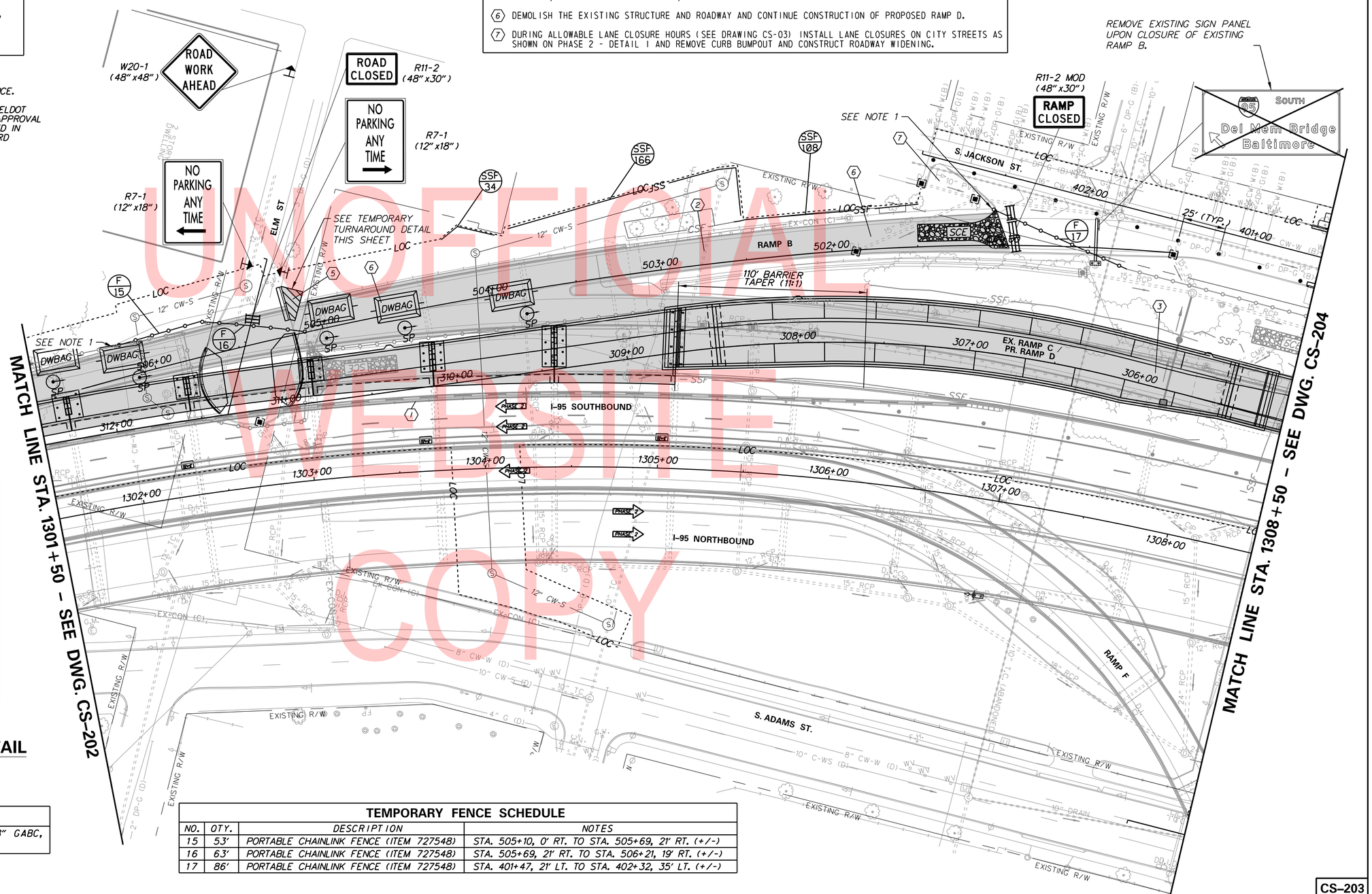

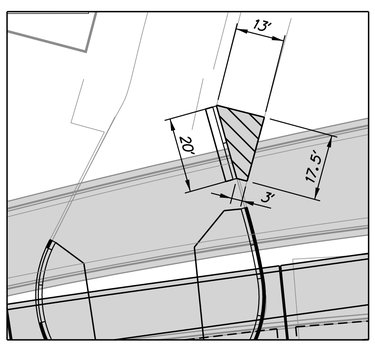

TEMPORARY TURNAROUND DETAIL

TEMPORARY PAVING LEGEND

- 4" SUPERPAVE TYPE B, PG 76-22 ON 8" GABC, TYPE B

TEMPORARY FENCE SCHEDULE

NO.	QTY.	DESCRIPTION	NOTES
15	53'	PORTABLE CHAINLINK FENCE (ITEM 727548)	STA. 505+10, 0' RT. TO STA. 505+69, 21' RT. (+/-)
16	63'	PORTABLE CHAINLINK FENCE (ITEM 727548)	STA. 505+69, 21' RT. TO STA. 506+21, 19' RT. (+/-)
17	86'	PORTABLE CHAINLINK FENCE (ITEM 727548)	STA. 401+47, 21' LT. TO STA. 402+32, 35' LT. (+/-)

UNOFFICIAL WEBSITE COPY

ADDENDA / REVISIONS

SCALE 0 30 60 90 FEET

REHABILITATION OF I-95, 2ND STREET ON-RAMP IMPROVEMENTS

CONTRACT	BRIDGE NO.	1-748S, 1-750
T201907402	DESIGNED BY: WRA	
COUNTY	CHECKED BY: WRA	
NEW CASTLE		

CONSTRUCTION PHASING, M.O.T., AND EROSION CONTROL PLAN - PHASE 2

CS-203
SECTION
WRA
SHEET NO.
226

N:\31987-004\Contract_Ramp_D\CADD\Traffic\CS203.dgn
9/11/2019 2:19:18 PM

CONSTRUCTION PHASING LEGEND

- PROPOSED CONSTRUCTION THIS PHASE
- EXISTING SIGN/PROPOSED TEMPORARY SIGN
- TYPE III BARRICADE
- PLASTIC DRUM
- TRAFFIC FLOW ARROW
- TEMPORARY P.C.C. SAFETY BARRIER, UNPINNED
- TEMPORARY P.C.C. SAFETY BARRIER, PINNED
- TEMPORARY IMPACT ATTENUATOR
- ARROW PANEL
- REMOVE EXISTING STRIPING BY CONTRACTOR
- PROTECTION VEHICLE WITH TRUCK-MOUNTED ATTENUATOR

SEQUENCE OF CONSTRUCTION - PHASE 2

1. MAINTAIN TEMPORARY TRAFFIC CONTROL DEVICES FROM PHASE I FOR I-95 SOUTHBOUND AND SIDE STREETS, AS SHOWN ON PLAN.
2. MAINTAIN CLOSURE OF EXISTING RAMP C AND DETOUR TRAFFIC. CONTINUE DEMOLITION OF THE EXISTING STRUCTURE AND CONSTRUCTION OF PROPOSED RAMP D.
3. INSTALL PEDESTRIAN DETOUR AS SHOWN ON DWG. DP-04 OR DP-05 DEPENDING ON AREA WITH WORK (SEE NOTE 1).
4. DURING ALLOWABLE LANE CLOSURE HOURS (SEE DRAWING CS-03) INSTALL LANE CLOSURES ON CITY STREETS AS SHOWN ON PHASE I - DETAIL 2 AND CONSTRUCT ROADWAY WIDENING AND RAMP D TIE-IN.
5. COORDINATE WITH CONTRACTOR FOR CONTRACT NO. T201907002 TO ALLOW FOR CONSTRUCTION OF PROPOSED CANTILEVER SIGN STRUCTURE C-10. INSTALL PERMANENT SIGN PANEL ON CANTILEVER SIGN STRUCTURE C-10 PRIOR TO OPENING RAMP D TO TRAFFIC.

NOTES:

1. THE CONTRACTOR SHALL NOT PERFORM WORK ALONG M.L.K. JR. BLVD. AND AT THE INTERSECTION OF M.L.K. JR. BLVD. AND ADAMS ST. OR ALONG 2ND ST. AND AT THE INTERSECTION OF 2ND ST. AND ADAMS ST. SIMULTANEOUSLY SO THAT PEDESTRIAN ACCESS CAN BE MAINTAINED USING THE PEDESTRIAN DETOURS SHOWN ON DRAWINGS DP-04 AND DP-05.

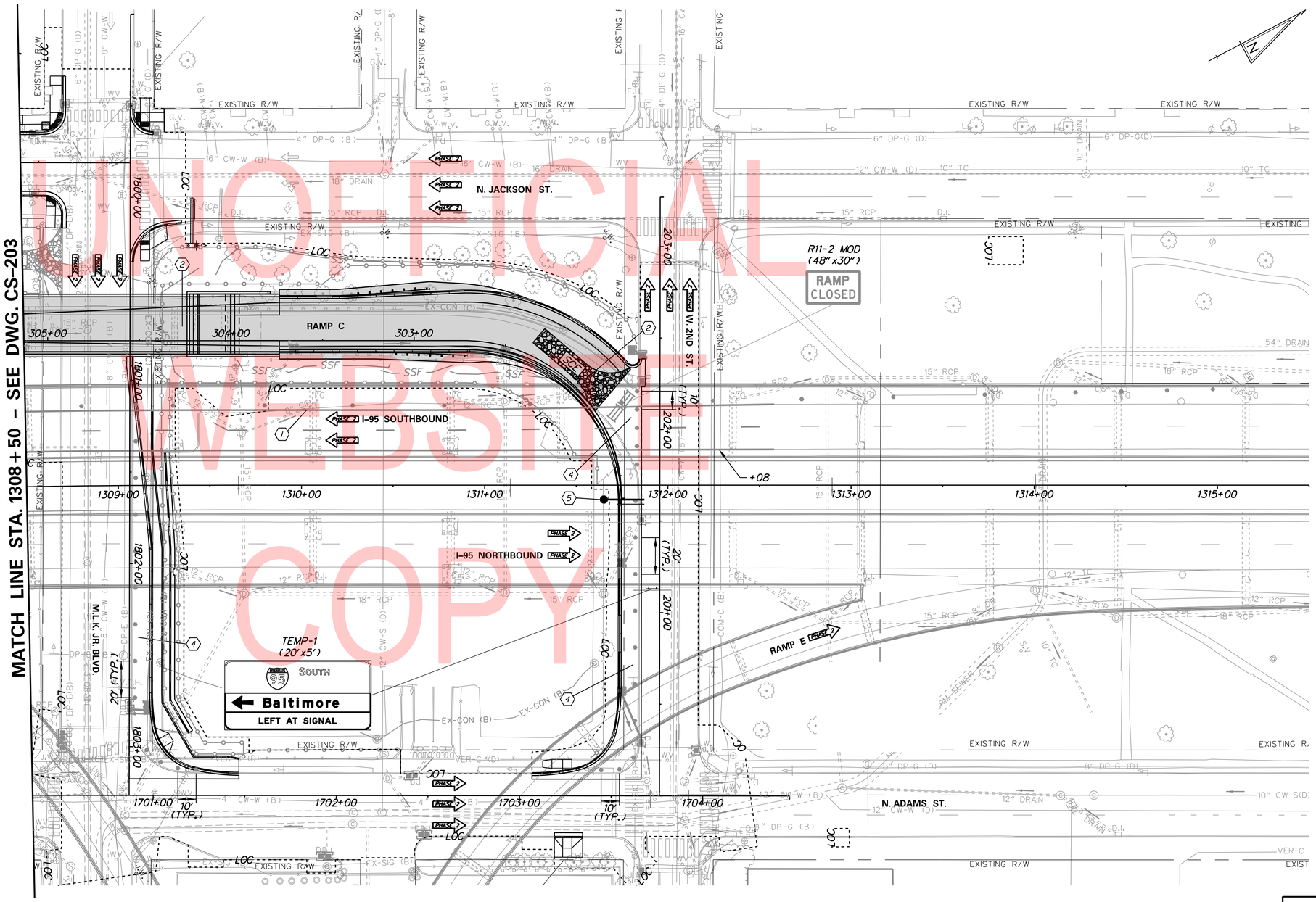

UNOFFICIAL WEBSITE COPY

N:\31987-004\Contract_Ramp_D\CADD\Traffic\CS204.dgn
9/11/2019 2:19:19 PM

ADDENDA / REVISIONS	

SCALE 0 30 60 90 FEET

REHABILITATION OF I-95, 2ND STREET ON-RAMP IMPROVEMENTS

CONTRACT	BRIDGE NO.	1-748S, 1-750
T201907402	DESIGNED BY: WRA	
COUNTY	CHECKED BY: WRA	
NEW CASTLE		

CONSTRUCTION PHASING, M.O.T., AND EROSION CONTROL PLAN – PHASE 2

CS-204
SECTION
WRA
SHEET NO.
227

CONSTRUCTION PHASING LEGEND

- PROPOSED CONSTRUCTION THIS PHASE
- EXISTING SIGN/PROPOSED TEMPORARY SIGN
- TYPE III BARRICADE
- PLASTIC DRUM
- TRAFFIC FLOW ARROW
- TEMPORARY P.C.C. SAFETY BARRIER, UNPINNED
- TEMPORARY P.C.C. SAFETY BARRIER, PINNED
- TEMPORARY IMPACT ATTENUATOR
- ARROW PANEL
- REMOVE EXISTING STRIPING BY CONTRACTOR
- PROTECTION VEHICLE WITH TRUCK-MOUNTED ATTENUATOR

SEQUENCE OF CONSTRUCTION - PHASE 2

1. DURING ALLOWABLE LANE CLOSURE HOURS (SEE DRAWING CS-03) INSTALL TEMPORARY TRAFFIC CONTROL DEVICES AS SHOWN ON THIS PLAN. SHIFT TRAFFIC TO DESIGNATED TRAVEL LANES. CONCURRENTLY INSTALL EROSION AND SEDIMENT CONTROL DEVICES AS SHOWN AND NEW STORM DRAIN SYSTEMS ARE INSTALLED.
2. REMOVE CURB BUMPOUT AND CONSTRUCT ROADWAY WIDENING.

NOTES:

1. COORDINATE WITH CITY OF WILMINGTON TO IMPLEMENT PARKING RESTRICTION ON THE WEST SIDE OF THE JACKSON STREET DURING IMPLEMENTATION OF THIS TRAFFIC CONTROL DETAIL.
2. TEMPORARY TRAFFIC CONTROL DEVICES ALONG I-95 NOT SHOWN.
3. REFER TO PHASE 2 PLANS FOR TEMPORARY TRAFFIC CONTROL DEVICES ALONG I-95, LANCASTER AVE, M.L.K. JR. BLVD, ADAMS ST, AND 2ND ST.

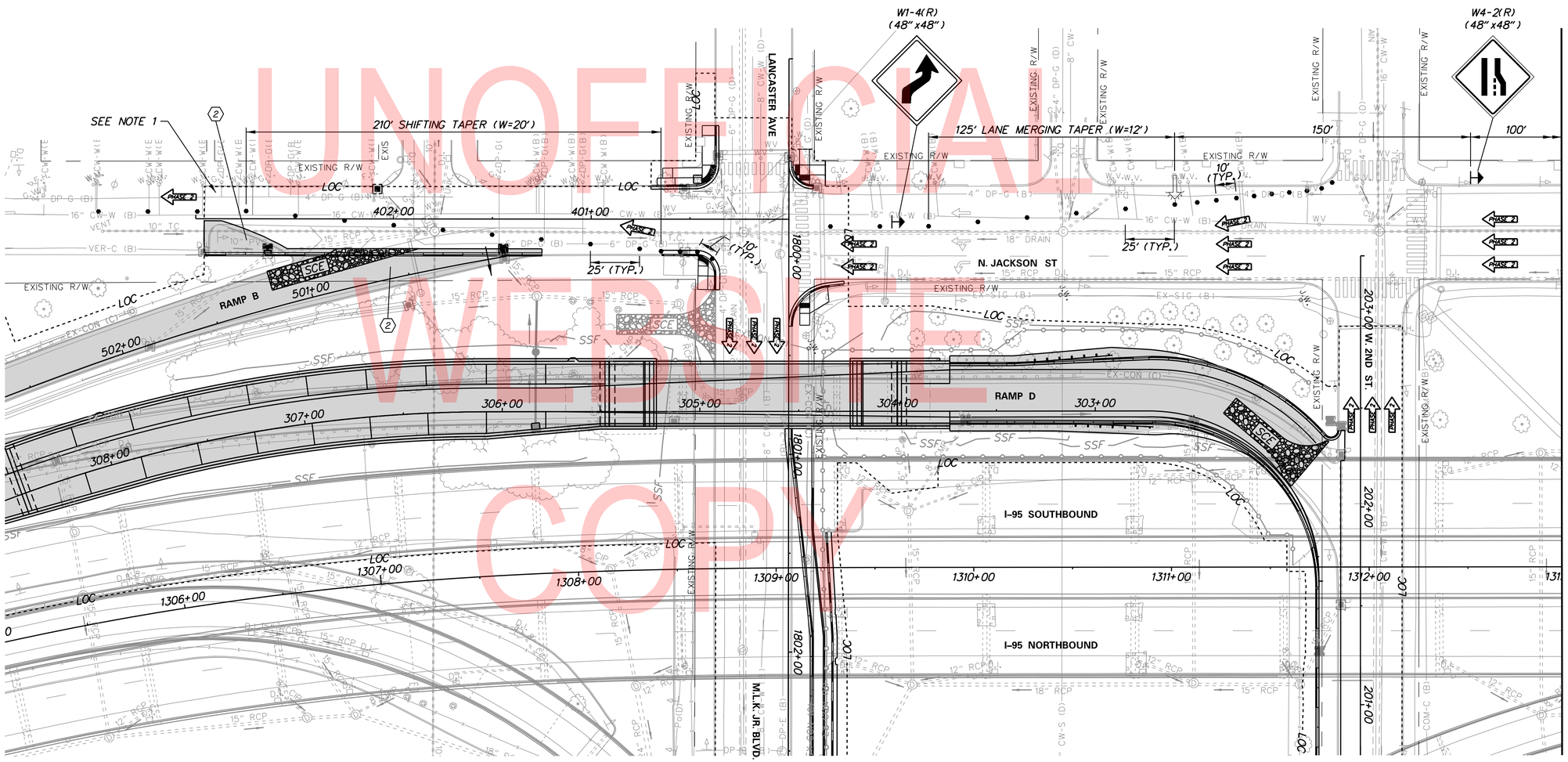

UNOFFICIAL WEBSITE COPY

N:\31987-004\Contract_Ramp_D\CADD\Traffic\CS205.dgn
9/12/2019 8:36:58 AM

ADDENDA / REVISIONS

SCALE 0 30 60 90 FEET

REHABILITATION OF I-95, 2ND STREET ON-RAMP IMPROVEMENTS

CONTRACT	BRIDGE NO.	1-748S, 1-750
T201907402	DESIGNED BY: WRA	
COUNTY		
NEW CASTLE	CHECKED BY: WRA	

CONSTRUCTION PHASING, M.O.T., AND EROSION CONTROL PLAN - PHASE 2 - DETAIL 1

CS-205
SECTION
WRA
SHEET NO.
228

CONSTRUCTION PHASING LEGEND

- PROPOSED CONSTRUCTION THIS PHASE
- EXISTING SIGN/PROPOSED TEMPORARY SIGN
- TYPE III BARRICADE
- PLASTIC DRUM
- TRAFFIC FLOW ARROW
- TEMPORARY P.C.C. SAFETY BARRIER, UNPINNED
- TEMPORARY P.C.C. SAFETY BARRIER, PINNED
- TEMPORARY IMPACT ATTENUATOR
- ARROW PANEL
- REMOVE EXISTING STRIPING BY CONTRACTOR
- PROTECTION VEHICLE WITH TRUCK-MOUNTED ATTENUATOR

SEQUENCE OF CONSTRUCTION - PHASE 2

(7) DURING ALLOWABLE LANE CLOSURE HOURS (SEE DRAWING CS-03) INSTALL TEMPORARY TRAFFIC CONTROL DEVICES AS SHOWN ON THIS PLAN. SHIFT TRAFFIC TO DESIGNATED TRAVEL LANES.

NOTES:

1. REFER TO PHASE 2 PLANS FOR TEMPORARY TRAFFIC CONTROL DEVICES ALONG I-95.

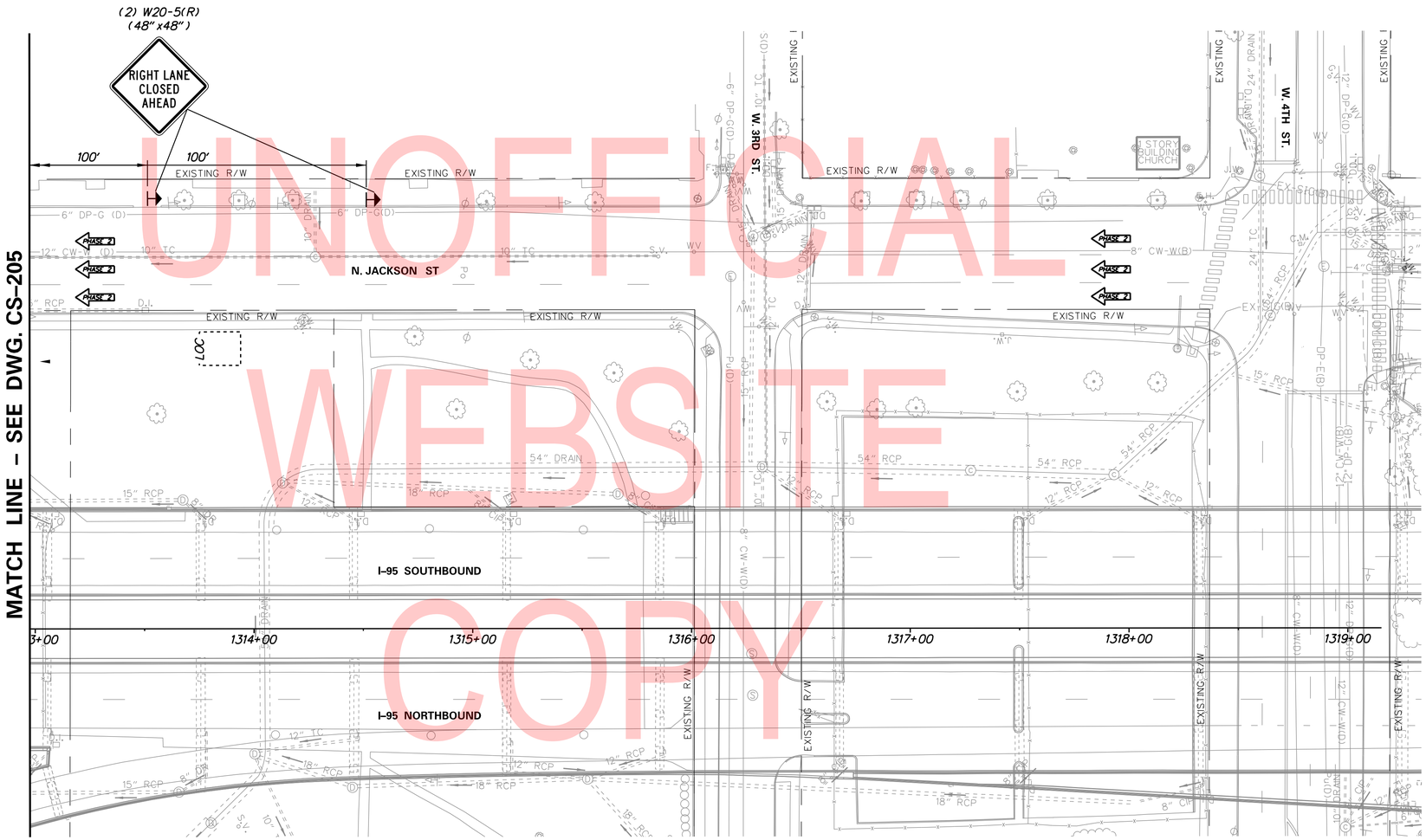

UNOFFICIAL WEBSITE COPY

N:\31987-004\Contrct_Ramp_D\CADD\Traffic\CS206.dgn
6/17/2019 2:19:22 PM

ADDENDA / REVISIONS	

SCALE 0 30 60 90 FEET

REHABILITATION OF I-95, 2ND STREET ON-RAMP IMPROVEMENTS

CONTRACT	BRIDGE NO.	1-748S
T201907402	DESIGNED BY: WRA	
COUNTY		
NEW CASTLE	CHECKED BY: WRA	

CONSTRUCTION PHASING, M.O.T., AND EROSION CONTROL PLAN – PHASE 2 – DETAIL 1

CS-206
SECTION
WRA
SHEET NO.
229

PANEL DESIGNATION	DWG. NO.	QUANTITY	LEGEND	SIZE			COLOR		BORDER		ARROW	SHEILD	REMARKS
				AREA (SF)	WIDTH	HEIGHT	LEGEND	BCKGRND	THICKNESS	RADIUS			
TEMP -1	CS-103	1		100.00	240"	60"	BLK	FO	2"	12"	STD. UP ARROW @ 270°	---	SHEET ALUMINUM

COLORS: BLK=BLACK, BLU=BLUE, BRO=BROWN, G=GREEN, R=RED, W=WHITE, Y=YELLOW, FY=FLUORESCENT YELLOW, FYG=FLUORESCENT YELLOW GREEN, PUR=PURPLE, O=ORANGE, FO=FLUORESCENT ORANGE.

UNOFFICIAL WEBSITE COPY

N:\31987-004\Contract_Ramp_D\CADD\Traffic\CS301.dgn
9/11/2019 2:19:22 PM

ADDENDA / REVISIONS		NOT TO SCALE	REHABILITATION OF I-95, 2ND STREET ON-RAMP IMPROVEMENTS	CONTRACT T201907402	BRIDGE NO.	GUIDE SIGN DIMENSIONS & DETAILS	CS-301
				COUNTY NEW CASTLE	DESIGNED BY: WRA		SECTION WRA
					CHECKED BY: WRA		SHEET NO. 230

DETOUR PLAN SHEET INDEX

UNOFFICIAL WEBSITE COPY

DETOUR PLAN SCHEDULE				
NO.	RAMP	CONSTRUCTION PHASE 1	CONSTRUCTION PHASE 2	DRAWING NO.
1	SB I-95 ON-RAMP FROM 2ND STREET	X		DP-01
2	SB I-95 ON-RAMP FROM JACKSON STREET AND 2ND STREET		X	DP-02
3	MLK JR BOULEVARD (SEE NOTE 1)	X	X	DP-03
4	MLK JR BOULEVARD PEDESTRIAN DETOUR	X	X	DP-04
5	2ND STREET PEDESTRIAN DETOUR	X	X	DP-05
6	MARYLAND AVENUE (SEE NOTE 1)	X	X	DP-06

NOTE:
1. ROAD CLOSURE PERMITTED DURING ALLOWABLE ROADWAY CLOSURE HOURS (SEE DRAWING CS-03) ONLY AS REQUIRED FOR BRIDGE DEMOLITION AND CONSTRUCTION, WITH APPROVAL OF THE ENGINEER.

ADDENDA / REVISIONS

NOT TO SCALE

REHABILITATION OF I-95, 2ND STREET ON-RAMP IMPROVEMENTS

CONTRACT: T201907402
COUNTY: NEW CASTLE
BRIDGE NO.
DESIGNED BY: WRA
CHECKED BY: WRA

DP-00 – DETOUR PLAN SHEET INDEX

DP-00
SECTION: WRA
SHEET NO. 231

N:\31987-004\Contract_Ramp_DVCADD\Traffic\DP00_Index Sheet.dgn
9/11/2019 2:08:17 PM

PORTABLE CHANGEABLE MESSAGE SIGNS

LEGEND

= CLOSURE AREA

= RECOMMENDED DETOUR ROUTE

SPECIAL SIGNS

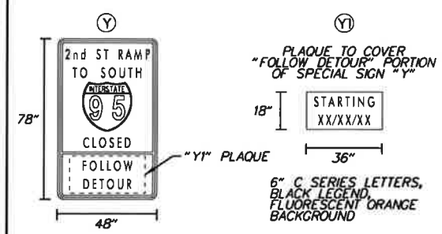

6" C SERIES LETTERS, 24" INTERSTATE SHIELD, BLACK LEGEND, FLUORESCENT ORANGE BACKGROUND

DISPLAY SIGN "Y" WITH "Y1" PLAQUE AT CLOSURE POINT LOCATION FOR 10 DAYS PRIOR TO IMPLEMENTATION OF DETOUR

RELOCATE SIGN TO LOCATION NOTED ON PLAN UPON IMPLEMENTATION OF DETOUR AND REMOVE "Y1" PLAQUE

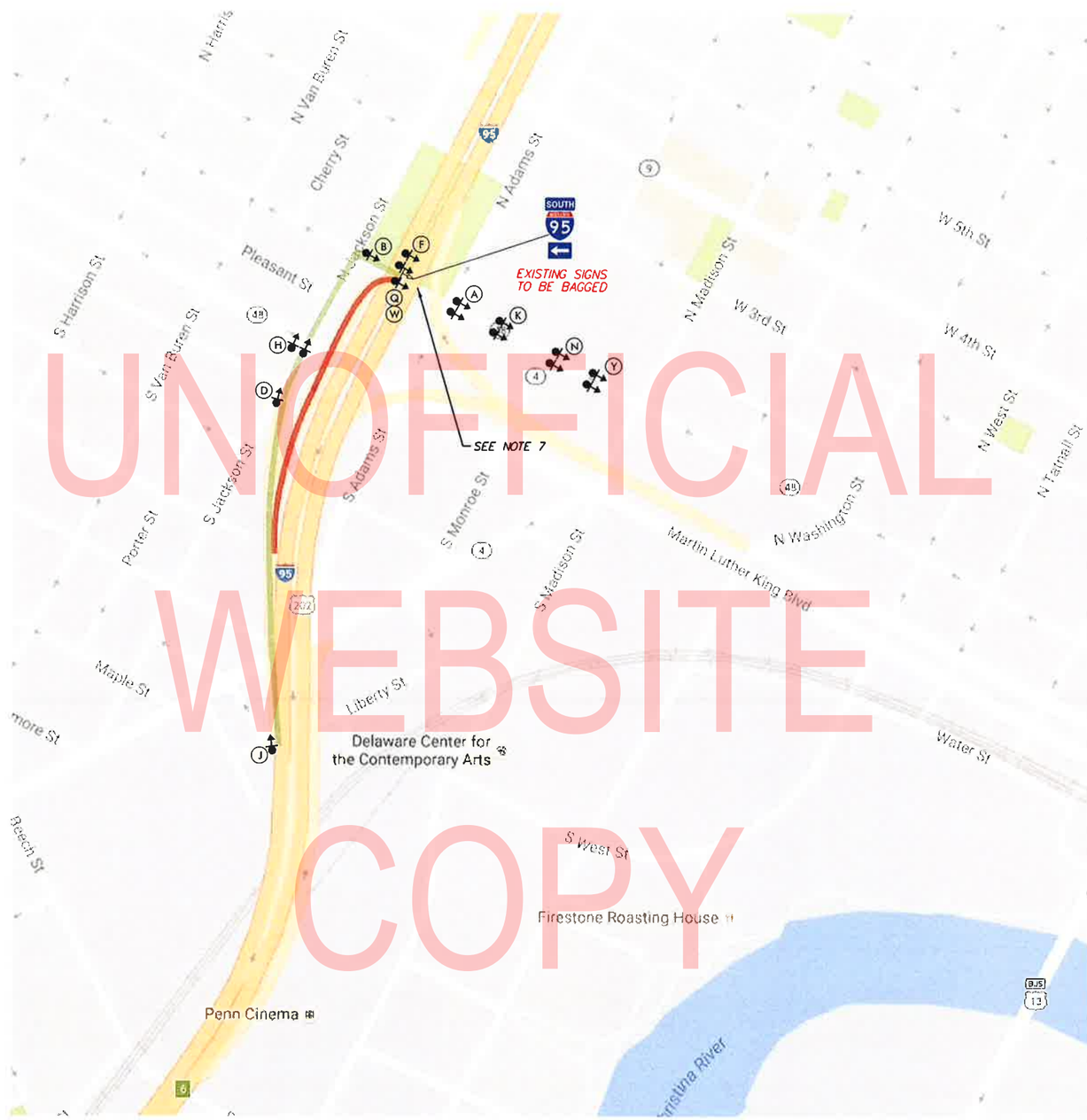

UNOFFICIAL WEBSITE COPY

LEGEND

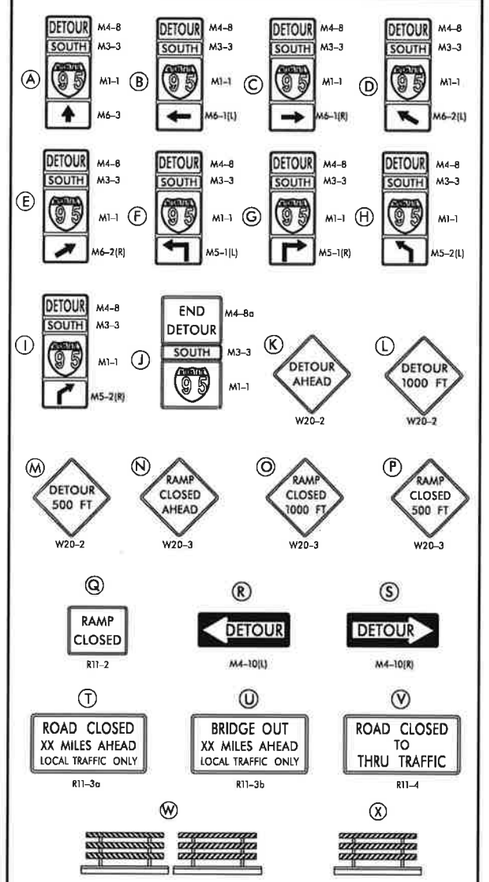

GENERAL NOTES

1. ALL TEMPORARY TRAFFIC CONTROL DEVICES ARE TO BE SUPPLIED AND MAINTAINED BY THE GENERAL CONTRACTOR AND SHALL BE IN COMPLIANCE WITH THIS PLAN AND THE DELAWARE MANUAL ON UNIFORM TRAFFIC CONTROL DEVICES (DE MUTCD) LATEST EDITION.
2. SIGNS "N" THROUGH "Q" AND "T" AND "V", THE WORD "ROAD" SHALL BE CHANGED TO "RAMP", "RR XING" OR "BRIDGE" WHERE APPLICABLE.
3. "W" TYPE 3 BARRICADES AT A ROAD CLOSURE SHALL BE PLACED COMPLETELY ACROSS THE ROADWAY, FROM CURB TO CURB, OR FROM EDGE OF ROAD TO EDGE OF ROAD, WITH THE STRIPES POSITIONED DOWNWARD TOWARD THE CENTER OF THE ROADWAY.
4. BARRICADES SHALL BE A MINIMUM OF 6 FEET WIDE UNLESS DIRECTED BY THE ENGINEER.

NOTES:

5. THE CONTRACTOR IS RESPONSIBLE FOR COORDINATING WITH THE CITY OF WILMINGTON AS REQUIRED FOR INSTALLATION OF ALL PCMS.
6. SEE CONSTRUCTION PHASING, M.O.T. AND EROSION CONTROL PLANS FOR PLACEMENT OF SIGNS AND TYPE III BARRICADES AT RAMP CLOSURE POINTS.
7. REFER TO DWG. CS-103 FOR TEMPORARY GUIDE SIGN MODIFICATIONS DURING DETOUR.

PREPARED BY

WRA Whitman, Requardt and Associates, LLP
Engineers · Architects · Environmental Planners Est. 1915

9/11/19
DATE

THIS SEAL APPLIES TO ALL SHEETS BEARING THE "WRA" SECTION DESIGNATION.

MATTHEW J.A. BUCKLE LICENSED No. 18224 PROFESSIONAL ENGINEER

SEAL

CONCURRENCE FOR IMPLEMENTATION

TRAFFIC SAFETY — DATE 9/12/19

DP-01

ADDENDA / REVISIONS

NOT TO SCALE

REHABILITATION OF I-95, 2ND STREET ON-RAMP IMPROVEMENTS

CONTRACT	T201907402
COUNTY	NEW CASTLE
PERMIT NO.	N/A
DESIGNED BY:	WRA
CHECKED BY:	WRA

DP-01 – SB I-95 ON-RAMP FROM 2ND STREET

SECTION	WRA
SHEET NO.	232

N:\39987-004\Contract_Ramp_D\CADD\Traffic\DP01_SB on-ramp from 2nd.dgn
9/11/2019 2:08:18 PM

PORTABLE CHANGEABLE MESSAGE SIGNS

PRIOR TO DETOUR
(10 DAYS PRIOR TO BEGINNING OF DETOUR)

PCMS-1

RAMPS TO I-95 SB TO CLOSE	STARTING XX/XX/XX

DURING DETOUR
(DISPLAY FOR 5 DAYS AFTER IMPLEMENTATION OF DETOUR)

PCMS-1

RAMPS TO I-95 SB CLOSED	FOLLOW DETOUR

LEGEND

= CLOSURE AREA

= RECOMMENDED DETOUR ROUTE

SPECIAL SIGNS

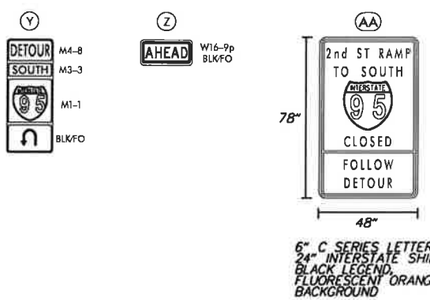

6" C SERIES LETTERS, 24" INTERSTATE SHIELD, BLACK LEGEND, FLUORESCENT ORANGE BACKGROUND

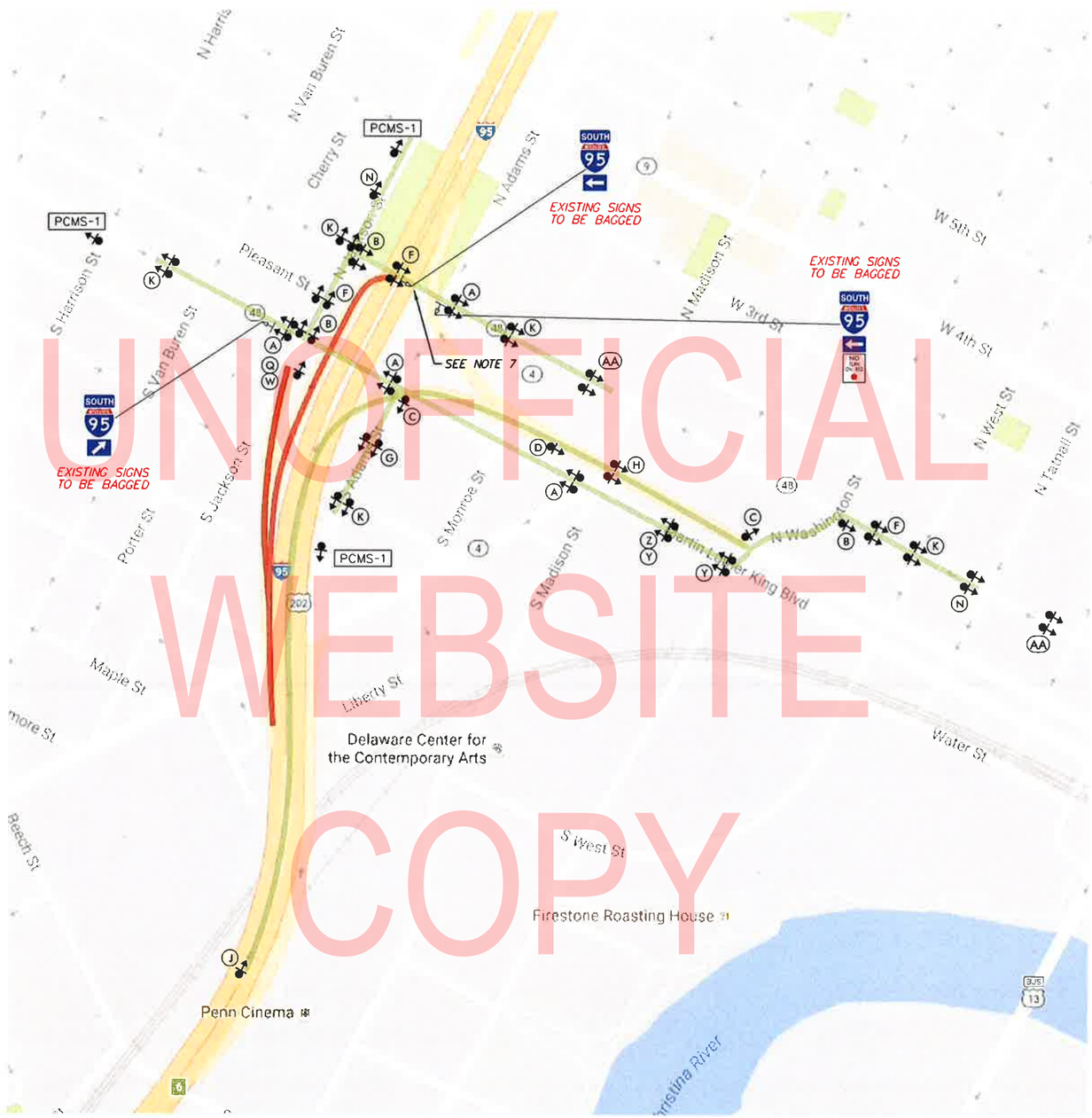

UNOFFICIAL WEBSITE COPY

LEGEND

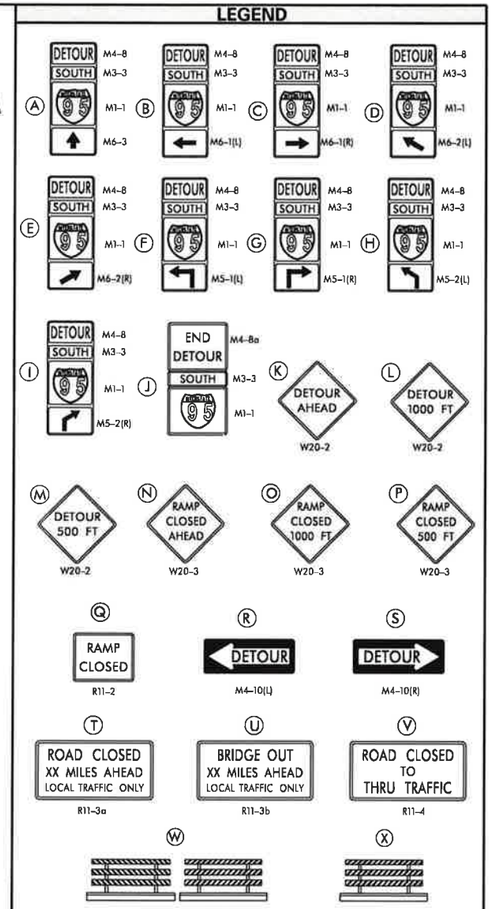

GENERAL NOTES

1. ALL TEMPORARY TRAFFIC CONTROL DEVICES ARE TO BE SUPPLIED AND MAINTAINED BY THE GENERAL CONTRACTOR AND SHALL BE IN COMPLIANCE WITH THIS PLAN AND THE DELAWARE MANUAL ON UNIFORM TRAFFIC CONTROL DEVICES (DE MUTCD) LATEST EDITION.
2. SIGNS "N" THROUGH "Q" AND "T" AND "V", THE WORD "ROAD" SHALL BE CHANGED TO "RAMP", "RR XING" OR "BRIDGE" WHERE APPLICABLE.
3. "W" TYPE 3 BARRICADES AT A ROAD CLOSURE SHALL BE PLACED COMPLETELY ACROSS THE ROADWAY, FROM CURB TO CURB, OR FROM EDGE OF ROAD TO EDGE OF ROAD, WITH THE STRIPES POSITIONED DOWNWARD TOWARD THE CENTER OF THE ROADWAY.
4. BARRICADES SHALL BE A MINIMUM OF 6 FEET WIDE UNLESS DIRECTED BY THE ENGINEER.

NOTES:

5. THE CONTRACTOR IS RESPONSIBLE FOR COORDINATING WITH THE CITY OF WILMINGTON AS REQUIRED FOR INSTALLATION OF ALL PCMS.
6. SEE CONSTRUCTION PHASING, M.O.T. AND EROSION CONTROL PLANS FOR PLACEMENT OF SIGNS AND TYPE III BARRICADES AT RAMP CLOSURE POINTS.
7. REFER TO DWG. CS-103 FOR TEMPORARY GUIDE SIGN MODIFICATIONS DURING DETOUR.

PREPARED BY

WRA Whitman, Requardt and Associates, LLP
Engineers · Architects · Environmental Planners Est. 1915

9/11/19
DATE

THIS SEAL APPLIES TO ALL SHEETS BEARING THE "WRA" SECTION DESIGNATION.

MATTHEW J.A. BUCKLEY LICENSE No. 18224 PROFESSIONAL ENGINEER

SEAL

CONCURRENCE FOR IMPLEMENTATION

TRAFFIC SAFETY — DATE 9/12/19

DP-02

ADDENDA / REVISIONS

NOT TO SCALE

REHABILITATION OF I-95, 2ND STREET ON-RAMP IMPROVEMENTS

CONTRACT	PERMIT NO.	N/A
T201907402	DESIGNED BY: WRA	
COUNTY		
NEW CASTLE	CHECKED BY: WRA	

DP-02 – SB I-95 ON-RAMP FROM JACKSON STREET AND 2ND STREET

SECTION
WRA
SHEET NO.
233

N:\13987-004\Contract_Ramp_D\CADD\Traffic\DP02_SB on-ramp from Jackson and 2nd.dgn
9/12/2019 9:38:04 AM

PORTABLE CHANGEABLE MESSAGE SIGNS

PRIOR TO DETOUR
(10 DAYS PRIOR TO BEGINNING OF DETOUR)

PCMS-1

MLK BLVD TO CLOSE	XX/XX-XX/XX XXP-XXA

DURING DETOUR
(DISPLAY DURING IMPLEMENTATION OF DETOUR)

PCMS-2

MLK BLVD CLOSED	FOLLOW DETOUR

LEGEND

= CLOSURE AREA

= RECOMMENDED DETOUR ROUTE

SPECIAL SIGNS

(Y) MLK JR BLVD — W16-8P BLKFO

(Z) MLK Blvd CLOSED EAST OF Jackson St / FOLLOW DETOUR — 60" x 48"

6" C SERIES LETTERS, BLACK LEGEND, FLUORESCENT ORANGE BACKGROUND

UNOFFICIAL WEBSITE COPY

NOTES:

5. THE CONTRACTOR IS RESPONSIBLE FOR COORDINATING WITH THE CITY OF WILMINGTON AS REQUIRED FOR INSTALLATION OF ALL PCMS.
6. TYPICAL APPLICATION 33 FROM PART 6 OF THE DELAWARE MUTCD SHALL BE UTILIZED TO SHIFT SOUTHBOUND TRAFFIC ON M.L.K. JR. BLVD INTO THE RIGHT LANE PRIOR TO THE M.L.K. JR. BLVD AND JACKSON ST INTERSECTION.

LEGEND

(A) DETOUR — M4-9-DE
(B) DETOUR — M4-9
(C) DETOUR — M4-9
(D) DETOUR — M4-9
(E) DETOUR — M4-9
(F) DETOUR — M4-9
(G) DETOUR — M4-9
(H) DETOUR — M4-9
(I) DETOUR — M4-9
(J) END DETOUR — M4-8a
(K) DETOUR AHEAD — W20-2
(L) DETOUR 1000 FT — W20-2
(M) DETOUR 500 FT — W20-2
(N) ROAD CLOSED AHEAD — W20-3
(O) ROAD CLOSED 1000 FT — W20-3
(P) ROAD CLOSED 500 FT — W20-3
(Q) ROAD CLOSED — R11-2
(R) DETOUR — M4-10(L)
(S) DETOUR — M4-10(R)
(T) ROAD CLOSED XX MILES AHEAD LOCAL TRAFFIC ONLY — R11-3a
(U) BRIDGE OUT XX MILES AHEAD LOCAL TRAFFIC ONLY — R11-3b
(V) ROAD CLOSED TO THRU TRAFFIC — R11-4
(W)
(X)

GENERAL NOTES

1. ALL TEMPORARY TRAFFIC CONTROL DEVICES ARE TO BE SUPPLIED AND MAINTAINED BY THE GENERAL CONTRACTOR AND SHALL BE IN COMPLIANCE WITH THIS PLAN AND THE DELAWARE MANUAL ON UNIFORM TRAFFIC CONTROL DEVICES (DE MUTCD) LATEST EDITION.
2. SIGNS "N" THROUGH "Q" AND "T" AND "V", THE WORD "ROAD" SHALL BE CHANGED TO "RAMP", "RR XING" OR "BRIDGE" WHERE APPLICABLE.
3. "W" TYPE 3 BARRICADES AT A ROAD CLOSURE SHALL BE PLACED COMPLETELY ACROSS THE ROADWAY, FROM CURB TO CURB, OR FROM EDGE OF ROAD TO EDGE OF ROAD, WITH THE STRIPES POSITIONED DOWNWARD TOWARD THE CENTER OF THE ROADWAY.
4. BARRICADES SHALL BE A MINIMUM OF 6 FEET WIDE UNLESS DIRECTED BY THE ENGINEER.

CONCURRENCE FOR IMPLEMENTATION

TRAFFIC SAFETY — DATE 9/12/19

DP-03

PREPARED BY

WRA Whitman, Requardt and Associates, LLP
Engineers · Architects · Environmental Planners Est. 1915

THIS SEAL APPLIES TO ALL SHEETS BEARING THE "WRA" SECTION DESIGNATION. — DATE 9/11/19

MATTHEW J.A. BUCKLEY — LICENSE No. 18224 — PROFESSIONAL ENGINEER — STATE OF DELAWARE

SEAL

ADDENDA / REVISIONS

NOT TO SCALE

REHABILITATION OF I-95, 2ND STREET ON-RAMP IMPROVEMENTS

CONTRACT	PERMIT NO.	N/A
T201907402	DESIGNED BY: WRA	
COUNTY		
NEW CASTLE	CHECKED BY: WRA	

DP-03 – MLK JR BOULEVARD

SECTION: WRA

SHEET NO. 234

N:\3987-004\Contract_Ramp_D\CADD\Traffic\DP03_MLK SB (ramp D closure).dgn
9/10/2019 2:08:20 PM

SPECIAL SIGNS

SPECIAL NOTES

5. PEDESTRIAN TRAFFIC SIGNAL DISPLAYS CONTROLLING CLOSED CROSSWALKS SHALL BE COVERED OR DEACTIVATED AND TURNED AWAY FROM THE CROSSWALK.

6. SEE DP-05 FOR PEDESTRIAN DETOUR ON 2ND STREET. THE CONTRACTOR SHALL SCHEDULE AND EXECUTE WORK SO THAT THE PEDESTRIAN DETOURS SHOWN ON DP-04 AND DP-05 ARE NOT IMPLEMENTED CONCURRENTLY.

WORK AREA

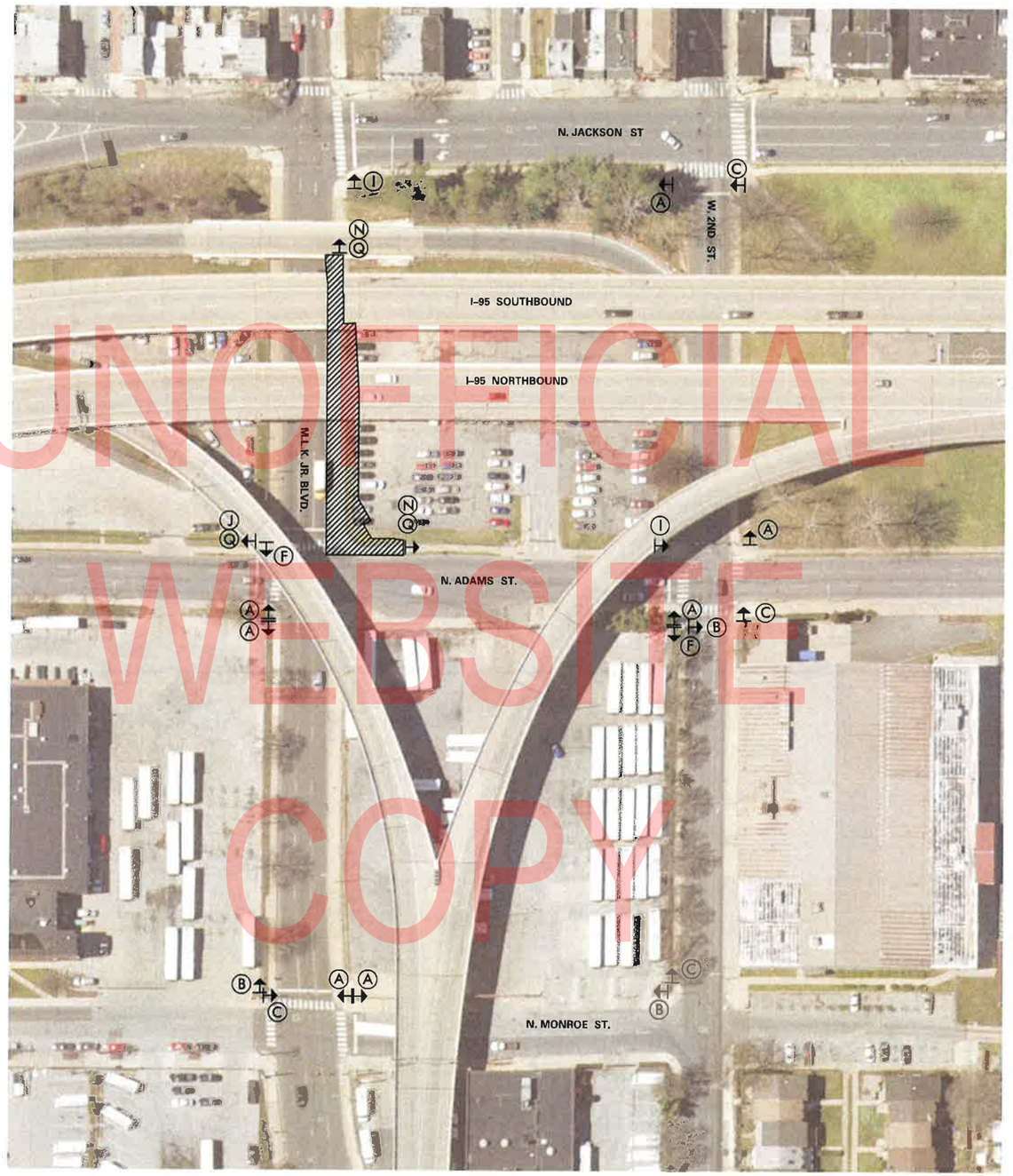

UNOFFICIAL WEBSITE COPY

LEGEND

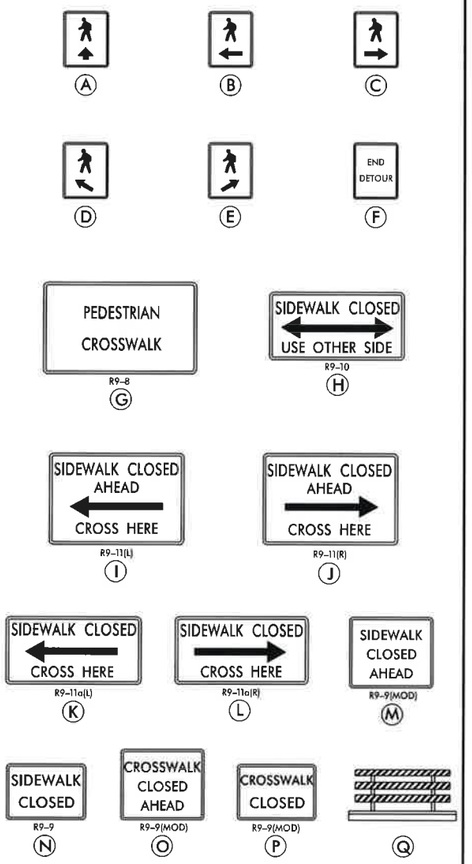

GENERAL NOTES

1. ALL TEMPORARY TRAFFIC CONTROL DEVICES ARE TO BE SUPPLIED AND MAINTAINED BY THE GENERAL CONTRACTOR AND SHALL BE IN COMPLIANCE WITH THIS PLAN AND THE DELAWARE MANUAL ON UNIFORM TRAFFIC CONTROL DEVICES (DE MUTCD) LATEST EDITION.
2. SIGNS "N" THROUGH "Q" AND "T" AND "V", THE WORD "ROAD" SHALL BE CHANGED TO "RAMP", "RR XING" OR "BRIDGE" WHERE APPLICABLE.
3. "W" TYPE 3 BARRICADES AT A ROAD CLOSURE SHALL BE PLACED COMPLETELY ACROSS THE ROADWAY, FROM CURB TO CURB, OR FROM EDGE OF ROAD TO EDGE OF ROAD, WITH THE STRIPES POSITIONED DOWNWARD TOWARD THE CENTER OF THE ROADWAY.
4. BARRICADES SHALL BE A MINIMUM OF 6 FEET WIDE UNLESS DIRECTED BY THE ENGINEER.

CONCURRENCE FOR IMPLEMENTATION

TRAFFIC SAFETY — DATE 9/12/19

DP-04

PREPARED BY

WRA Whitman, Requardt and Associates, LLP
Engineers • Architects • Environmental Planners Est. 1915

9/11/19
THIS SEAL APPLIES TO ALL SHEETS BEARING THE "WRA" SECTION DESIGNATION. — DATE

MATTHEW J.A. BUCKLEY LICENSE No. 18224 PROFESSIONAL ENGINEER — SEAL

ADDENDA / REVISIONS

SCALE 0 50 100 150 FEET

REHABILITATION OF I-95, 2ND STREET ON-RAMP IMPROVEMENTS

CONTRACT	PERMIT NO.
T201907402	DESIGNED BY: WRA
COUNTY	
NEW CASTLE	CHECKED BY: WRA

DP-04 – PEDESTRIAN DETOUR PLAN MLK JR BOULEVARD AT ADAMS STREET

SECTION: WRA
SHEET NO.: 235

M:\3987-004\Contract_Ramp_D\CADD\Traffic\DP04_Pedestrian MLK and 2nd @ Adams.dgn
9/11/2019 2:19:23 PM

SPECIAL SIGNS

SPECIAL NOTES

5. PEDESTRIAN TRAFFIC SIGNAL DISPLAYS CONTROLLING CLOSED CROSSWALKS SHALL BE COVERED OR DEACTIVATED AND TURNED AWAY FROM THE CROSSWALK.

6. SEE DP-04 FOR PEDESTRIAN DETOUR ON 2ND STREET. THE CONTRACTOR SHALL SCHEDULE AND EXECUTE WORK SO THAT THE PEDESTRIAN DETOURS SHOWN ON DP-04 AND DP-05 ARE NOT IMPLEMENTED CONCURRENTLY.

WORK AREA

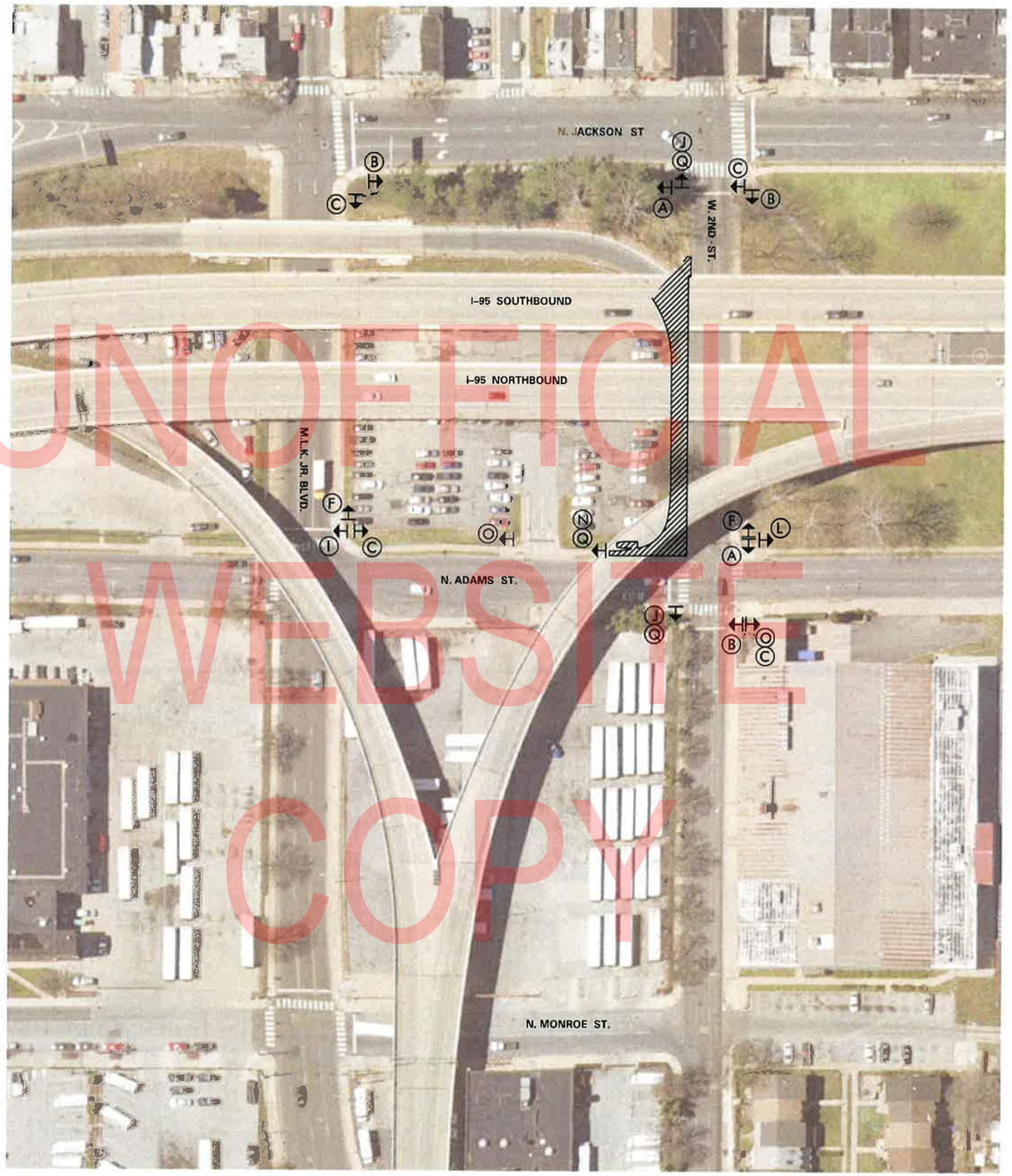

UNOFFICIAL WEBSITE COPY

LEGEND

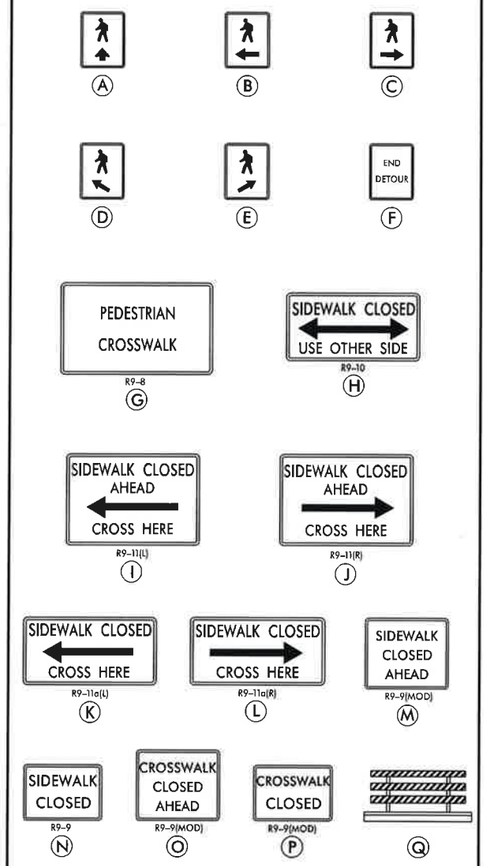

GENERAL NOTES

1. ALL TEMPORARY TRAFFIC CONTROL DEVICES ARE TO BE SUPPLIED AND MAINTAINED BY THE GENERAL CONTRACTOR AND SHALL BE IN COMPLIANCE WITH THIS PLAN AND THE DELAWARE MANUAL ON UNIFORM TRAFFIC CONTROL DEVICES (DE MUTCD) LATEST EDITION.
2. SIGNS "N" THROUGH "Q" AND "T" AND "V", THE WORD "ROAD" SHALL BE CHANGED TO "RAMP", "RR XING" OR "BRIDGE" WHERE APPLICABLE.
3. "W" TYPE 3 BARRICADES AT A ROAD CLOSURE SHALL BE PLACED COMPLETELY ACROSS THE ROADWAY, FROM CURB TO CURB, OR FROM EDGE OF ROAD TO EDGE OF ROAD, WITH THE STRIPES POSITIONED DOWNWARD TOWARD THE CENTER OF THE ROADWAY.
4. BARRICADES SHALL BE A MINIMUM OF 6 FEET WIDE UNLESS DIRECTED BY THE ENGINEER.

CONCURRENCE FOR IMPLEMENTATION

TRAFFIC SAFETY — DATE 9/12/19

PREPARED BY

WRA Whitman, Requardt and Associates, LLP
Engineers · Architects · Environmental Planners EST. 1915

THIS SEAL APPLIES TO ALL SHEETS BEARING THE "WRA" SECTION DESIGNATION. — DATE 9/11/19

MATTHEW J.A. BUCKLEY — LICENSE No. 18224 — PROFESSIONAL ENGINEER — SEAL

ADDENDA / REVISIONS

SCALE: 0 50 100 150 FEET

REHABILITATION OF I-95, 2ND STREET ON-RAMP IMPROVEMENTS

CONTRACT	T201907402
COUNTY	NEW CASTLE
PERMIT NO.	
DESIGNED BY:	WRA
CHECKED BY:	WRA

DP-05 – PEDESTRIAN DETOUR PLAN 2ND STREET AT ADAMS STREET

SECTION	WRA
SHEET NO.	236

DP-05

N:\13987-004\Contract_Ramp_D\CADD\Traffic\DP05_Pedestrian MLK and 2nd @ Adams.dgn 9/11/2019 2:19:44 PM

PORTABLE CHANGEABLE MESSAGE SIGNS

PRIOR TO DETOUR
(10 DAYS PRIOR TO BEGINNING OF DETOUR)

PCMS-1

MARYLAND AVENUE TO CLOSE	XX/XX–XX/XX XXP–XXA

DURING DETOUR
(DISPLAY DURING IMPLEMENTATION OF DETOUR)

PCMS-2

MARYLAND AVENUE CLOSED	AT I-95 FOLLOW DETOUR

LEGEND

= CLOSURE AREA

= RECOMMENDED DETOUR ROUTE

SPECIAL SIGNS

Y — MARYLAND AVE — W16-8P BLK/FO

T1 — ROAD CLOSED 0.2 MILES AHEAD LOCAL TRAFFIC ONLY — R11-3a

T2 — ROAD CLOSED 0.1 MILES AHEAD LOCAL TRAFFIC ONLY — R11-3a

UNOFFICIAL WEBSITE COPY

NOTES:

5. THE CONTRACTOR IS RESPONSIBLE FOR COORDINATING WITH THE CITY OF WILMINGTON AS REQUIRED FOR INSTALLATION OF ALL PCMS.
6. TYPICAL APPLICATION 33 FROM PART 6 OF THE DELAWARE MUTCD SHALL BE UTILIZED TO SHIFT SOUTHBOUND TRAFFIC ON M.L.K. JR. BLVD INTO THE RIGHT LANE PRIOR TO THE M.L.K. JR. BLVD AND JACKSON ST INTERSECTION.

LEGEND

A — DETOUR — M4-9-DE
B — DETOUR — M4-9
C — DETOUR — M4-9
D — DETOUR — M4-9
E — DETOUR — M4-9
F — DETOUR — M4-9
G — DETOUR — M4-9
H — DETOUR — M4-9
I — DETOUR — M4-9
J — END DETOUR — M4-8a
K — DETOUR AHEAD — W20-2
L — DETOUR 1000 FT — W20-2
M — DETOUR 500 FT — W20-2
N — ROAD CLOSED AHEAD — W20-3
O — ROAD CLOSED 1000 FT — W20-3
P — ROAD CLOSED 500 FT — W20-3
Q — ROAD CLOSED — R11-2
R — DETOUR — M4-10(L)
S — DETOUR — M4-10(R)
T — ROAD CLOSED 0.3 MILES AHEAD LOCAL TRAFFIC ONLY — R11-3a
U — BRIDGE OUT XX MILES AHEAD LOCAL TRAFFIC ONLY — R11-3b
V — ROAD CLOSED TO THRU TRAFFIC — R11-4
W
X

GENERAL NOTES

1. ALL TEMPORARY TRAFFIC CONTROL DEVICES ARE TO BE SUPPLIED AND MAINTAINED BY THE GENERAL CONTRACTOR AND SHALL BE IN COMPLIANCE WITH THIS PLAN AND THE DELAWARE MANUAL ON UNIFORM TRAFFIC CONTROL DEVICES (DE MUTCD) LATEST EDITION.
2. SIGNS "N" THROUGH "O" AND "T" AND "V", THE WORD "ROAD" SHALL BE CHANGED TO "RAMP", "RR XING" OR "BRIDGE" WHERE APPLICABLE.
3. "W" TYPE 3 BARRICADES AT A ROAD CLOSURE SHALL BE PLACED COMPLETELY ACROSS THE ROADWAY, FROM CURB TO CURB, OR FROM EDGE OF ROAD TO EDGE OF ROAD, WITH THE STRIPES POSITIONED DOWNWARD TOWARD THE CENTER OF THE ROADWAY.
4. BARRICADES SHALL BE A MINIMUM OF 6 FEET WIDE UNLESS DIRECTED BY THE ENGINEER.

CONCURRENCE FOR IMPLEMENTATION

TRAFFIC SAFETY — DATE 9/12/19

PREPARED BY

WRA Whitman, Requardt and Associates, LLP
Engineers • Architects • Environmental Planners Est. 1915

9/11/19
DATE

THIS SEAL APPLIES TO ALL SHEETS BEARING THE "WRA" SECTION DESIGNATION.

MATTHEW J.A. BUTLER — No. 18224 — PROFESSIONAL ENGINEER

SEAL

ADDENDA / REVISIONS

NOT TO SCALE

REHABILITATION OF I-95, 2ND STREET ON-RAMP IMPROVEMENTS

CONTRACT	PERMIT NO.	N/A
T201907402	DESIGNED BY: WRA	
COUNTY	CHECKED BY: WRA	
NEW CASTLE		

DP-06 – MARYLAND AVENUE

SECTION: WRA
SHEET NO.: 237

DP-06

N:\13987-004\Contract_Ramp_D\CADD\Traffic\DP06_Maryland Ave.dgn
9/11/2019 2:08:21 PM

LIGHTING SYMBOL LEGEND

SYMBOL	DESCRIPTION
	– PROPOSED LIGHTING STANDARD AND FOUNDATION
	– EXISTING LIGHTING STANDARD AND FOUNDATION
	– EXISTING UTILITY POLE MOUNTED LEASED LIGHTING STANDARD
	– PROPOSED STRUCTURE MOUNTED LIGHTING STANDARD
	– EXISTING STRUCTURE MOUNTED LIGHTING STANDARD
	– EXISTING STRUCTURE MOUNTED LIGHTING STANDARD UPGRADED WITH PROPOSED LED LUMINAIRE
	– EXISTING DECORATIVE LIGHTING STANDARD AND LUMINAIRE
	– UNDERPASS LUMINAIRE (EXISTING AND PROPOSED)
CA X	– PROPOSED LIGHTING CONTROL AND DISTRIBUTION ENCLOSURE AND IDENTIFIER
CA X	– EXISTING LIGHTING CONTROL AND DISTRIBUTION ENCLOSURE AND IDENTIFIER
	– PROPOSED JUNCTION WELL
J.W.	– EXISTING JUNCTION WELL
J	– STRUCTURE MOUNTED JUNCTION BOX (EXISTING AND PROPOSED)
P P	– ELECTRIC UTILITY SERVICE EQUIPMENT (EXISTING AND PROPOSED)
—LI-CON—	– PROPOSED LIGHTING SERVICE RUN (CONDUIT)
	– PROPOSED LIGHTING SERVICE RUN (STRUCTURE MOUNTED CONDUIT)
—EX-CON—	– EXISTING SERVICE RUN (CONDUIT)
====:	– EXISTING SERVICE RUN (STRUCTURE MOUNTED CONDUIT)
LS X LS	– LIGHTING STANDARD IDENTIFIER (EXISTING AND PROPOSED)
UL X UL	– UNDERPASS LUMINAIRE IDENTIFIER (EXISTING AND PROPOSED)
SR X SR	– SERVICE RUN IDENTIFIER (EXISTING AND PROPOSED)
JW X JW	– JUNCTION WELL IDENTIFIER (TYPE) (EXISTING AND PROPOSED)
JB X JB	– STRUCTURE MOUNTED JUNCTION BOX IDENTIFIER (EXISTING AND PROPOSED)
RM C RM O	– REMOVE BY CONTRACTOR / REMOVE BY OTHERS
AB	– ABANDON BY CONTRACTOR

PROJECT LIGHTING NOTES:

1. SERVICE RUNS ARE SHOWN IN APPROXIMATE LOCATIONS. THE CONTRACTOR SHALL LOCATE THE SERVICE RUNS IN A MANNER THAT AVOIDS CONFLICTS WITH ALL EXISTING AND PROPOSED FEATURES AS FIELD CONDITIONS DICTATE AND AS APPROVED BY THE ENGINEER.
2. THE CONTRACTOR SHALL VERIFY ALL DIMENSIONS AND CONDITIONS PRIOR TO WORK.
3. THE LIGHTING CONTRACTOR SHALL COORDINATE HIS WORK WITH ALL THE CONTRACTORS INVOLVED ON THIS CONTRACT AND ADJACENT CONTRACTS. THE LIGHTING CONTRACTOR SHALL COORDINATE WITH THE ENGINEER AND THE GENERAL SUPERINTENDENT ON THE LOCATION OF ALL CONDUIT, JUNCTION WELLS AND POLE BASES TO ELIMINATE CONSTRUCTION CONFLICTS.
4. EXISTING UTILITY LOCATIONS SHOWN ON THE PLANS ARE APPROXIMATE. IT SHALL BE THE RESPONSIBILITY OF THE CONTRACTOR TO VERIFY THE EXACT LOCATIONS PRIOR TO COMMENCING WORK. THE CONTRACTOR SHALL PERFORM TEST HOLES PER THE STANDARD SPECIFICATIONS FOR ROAD AND BRIDGE CONSTRUCTION.
5. THE CONTRACTOR SHALL CONTACT DELMARVA POWER TO COORDINATE SERVICE DROP LOCATIONS AND TO ENSURE ALL PROPOSED SERVICE FEEDS ARE APPROVED PRIOR TO INSTALLATION OF CABINETS AND ELECTRIC UTLITY SERVICE EQUIPMENT. THE CONTRACTOR SHALL ARRANGE A MEETING WITH DELMARVA POWER, THE ENGINEER AND THE DELDOT TRAFFIC SECTION TO ENSURE THAT POWER IS AVAILABLE WHEN REQUIRED.
6. COLOR CODING SHALL BE PROVIDED THROUGHOUT THE ENTIRE NETWORK FOR SERVICE, FEEDER, BRANCH AND CONTROL CONDUCTORS. EACH PHASE SHALL BE AN INDEPENDENT COLOR: PHASE A SHALL BE BROWN, PHASE B SHALL BE ORANGE, PHASE C SHALL BE YELLOW, NEUTRAL SHALL BE WHITE AND GROUND SHALL BE GREEN. CONDUCTORS SHALL HAVE FACTORY IMPREGNATED COLOR THROUGHOUT THEIR ENTIRE LENGTH.
7. ALL FUSED CONNECTIONS SHALL BE MADE IN THE POLE BASE OR NEAREST ABOVE GRADE JUNCTION BOX FOR UNDERPASS INSTALLATIONS. SPLICES IN INGROUND JUNCTION BOXES OR PULL BOXES SHALL NOT BE FUSED.
8. ALL CONDUITS SHALL BE BONDED IN A CONTINOUS RUN FROM THE SOURCE BY A COPPER GROUNDING CONDUCTOR WITH SIZE AS NOTED ON PLANS.
9. ALL STATION, OFFSET AND DIMENSION INFORMATION SHOWN FOR PROPOSED LIGHTING STANDARDS IS TO THE CENTER OF THE PROPOSED POLE BASE.
10. ALL PROPOSED ROADWAY LIGHTING CONDUITS (SERVICE RUNS) SHALL BE RIGID POLYVINYL CHLORIDE SCHEDULE 80 WHEN INSTALLED BY TRENCHING OR OPEN CUT AND SDR-13.5 HDPE WHEN INSTALLED BY BORING, UNLESS OTHERWISE NOTED ON PLANS. ALL CONDUITS EMBEDDED WITHIN STRUCTURES SHALL BE RIGID POLYVINYL CHLORIDE, SCHEDULE 80, UNLESS OTHERWISE NOTED. CONDUITS MOUNTED TO STRUCTURES SHALL BE 1" DIAMETER RIGID GALVANIZED STEEL CONDUIT, UNLESS OTHERWISE NOTED.
11. ALL PROPOSED LIGHTING STANDARDS ON FOUNDATIONS IN EARTH SHALL BE INSTALLED WITH BREAKAWAY TRANSFORMER BASES WHETHER PROTECTED BY TRAFFIC BARRIER OR UNPROTECTED. PROPOSED LIGHTING STANDARDS MOUNTED TO STRUCTURES SHALL NOT HAVE BREAKAWAY TRANSFORMER BASES.
12. (1) 3/4" DIAMETER BY 10' LONG GROUND ROD SHALL BE INSTALLED AT EACH LIGHTING STANDARD POLE BASE, JUNCTION WELL, ELECTRICAL SERVICE PEDESTAL AND WITHIN THE LIGHTING CONTROL CENTER. GROUND RODS SHALL BE SEPARATED BY A MINUMUM OF 6 FEET.
13. ALL EXISTING CONDUITS SERVING LIGHT POLES DESIGNATED TO BE REMOVED SHALL BE ABANDONED.
14. THE EXISTING ELECTRICAL CABLES IN ALL CONDUITS DESIGNATED TO BE ABANDONED SHALL BE REMOVED AND PROPERLY DISCARDED
15. ALL FOUNDATIONS FOR EXISTING LIGHT POLES DESIGNATED TO BE REMOVED SHALL BE REMOVED TO A DEPTH OF 1'-0" BELOW FINISHED GRADE.
16. IF ANY UTILITY IS DAMAGED THE CONTRACTOR SHALL NOTIFY THE ENGINEER AND THE OWNER OF THE UTILITY IMMEDIATELY. ANY DAMAGE TO THE UTILITIES SHALL BE REPAIRED BY THE CONTRACTOR AT HIS EXPENSE UNDER THE DIRECTION OF THE UTLITY OWNER. UNDER NO CIRCUMSTANCE SHALL THE CONTRACTOR BACKFILL AN EXCAVATION OF AN IMPACTED UTILITY WITHOUT PERMISSION FROM THE UTILITY OWNER.
17. DELDOT SHALL HAVE THE FIRST RIGHT OF REFUSAL FOR ALL EXISTING LIGHTING STANDARDS AND OTHER LIGHTING EQUIPMENT TO BE PERMANENTLY REMOVED. THE CONTRACTOR SHALL REMOVE AND DELIVER THE LIGHTING STANDARDS AND OTHER LIGHTING EQUIPMENT THAT DELDOT WISHES TO SALVAGE TO THE CHAPMAN MAINTENANCE YARD LOCATED AT 39 REGAL BLVD., NEWARK, DE 19713. SALVAGING, TRANSPORTING, AND DELIVERING SALVAGED MATERIALS WILL NOT BE MEASURED AND PAID FOR, BUT WILL BE CONSIDERED INCIDENTAL TO THE PERTINENT CONTRACT LIGHTING ITEMS.
18. ALL EXISTING CONDUIT EMBEDDED WITHIN STRUCTURES DESIGNATED TO BE REMOVED SHALL BE REMOVED WITH THE DEMOLITION OF THE STRUCTURE.
19. ALL PROPOSED LIGHTING STANDARDS INSTALLED IN GROUND SHALL BE INSTALLED ON TYPE 6 POLE BASES WITH A POLE BASE EXTENSION PROVIDING AN ADDITIONAL 2 FEET IN DEPTH BELOW GRADE FOR THE FOUNDATION (8 FOOT DEPTH TOTAL BELOW GRADE).
20. PROPOSED ROADWAY LUMINAIRES SHALL PRODUCE A MINIMUM OF 22,704 INITIAL LUMENS AND OPERATE AT A WATTAGE LESS THAN OR EQUAL TO 210 WATTS. PROPOSED ROADWAY LUMINAIRES WILL BE PAID FOR UNDER ITEM 850522.
21. PROPOSED UNDERPASS LUMINAIRES SHALL BE WALL MOUNT STYLE FIXTURES. THE LUMINAIRE SHALL PRODUCE A MINIMUM OF 8,600 INITIAL LUMENS AND SHALL OPERATE AT A WATTAGE OF LESS THAN OR EQUAL TO 90 WATTS. PROPOSED UNDERPASS LUMINAIRES WILL BE PAID FOR UNDER ITEM 850527.
22. EXISTING UTILITIES ARE SHOWN IN AREAS WHERE LIGHTING EQUIPMENT IS BEING INSTALLED IN AT-GRADE AREAS. EXISTING UTILITIES ARE NOT SHOWN IN AREAS WHERE LIGHTING EQUIPMENT IS INSTALLED IN AND ON ELEVATED STRUCTURES FOR PLAN CLARITY.
23. REFER TO THE STRUCTURAL PLANS FOR THE DETAILS OF THE STRUCTURE MOUNTED LIGHTING STANDARD SUPPORTS AND PARAPET EMBEDDED CONDUITS AND JUNCTION BOXES. REFER TO THE ROADWAY PLANS FOR DETAILS OF CONCRETE BARRIER EMBEDDED CONDUITS AND JUNCTION BOXES

WEBSITE COPY

N:\31983-004\Contract_Ramp_D\CADD\Traffic\LI000.dgn
8/5/2019 8:32:46 AM

ADDENDA / REVISIONS	

REHABILITATION OF I-95, 2ND STREET ON-RAMP IMPROVEMENTS

CONTRACT	BRIDGE NO.	
T201907402	DESIGNED BY: WRA	
COUNTY		
NEW CASTLE	CHECKED BY: WRA	

LIGHTING LEGEND & NOTES

LI-000
SECTION
WRA
SHEET NO.
238

NOTES:

1. EXISTING STRUCTURE MOUNTED POLE, ARM AND WIRING TO REMAIN. DISCONNECT AND REMOVE EXISTING HIGH PRESSURE SODIUM LUMINAIRE AND REPLACE WITH PROPOSED LED LUMINAIRE.
2. INSTALL CONDUIT ALONG THE BACK SIDE OF THE PROPOSED AND EXISTING PARAPET FROM THE PROPOSED PARAPET EMBEDDED JUNCTION BOX AT STA. 1294+60 TO THE EXISTING PARAPET EMBEDDED JUNCTION BOX STA. 1292+55. ATTACH CONDUIT TO THE PARAPETS FOLLOWING THE CONDUIT INSTALLATION REQUIREMENTS SHOWN ON LI-103.
3. CORE A HOLE THROUGH THE BACK SIDE OF THE PARAPET INTO THE EXISTING PARAPET EMBEDDED JUNCTION BOX FOR SR-307 TO ENTER THE JUNCTION BOX. SPLICE THE PROPOSED CABLES TO THE EXISTING CABLES WITHIN THE JUNCTION BOX WHICH CONTINUE THROUGH THE PARAPET TO THE EXISTING LIGHTING STANDARDS TO THE SOUTH.

LIGHTING STANDARD SCHEDULE

NO.	CIRCUIT NO.	STATION	OFFSET	HEIGHT	ARM	LIGHT STANDARD
LS-A	11	1285+96.4	54.6' LT.	EX.	EX.	210 WATT LED, TYPE 3
LS-B	9	1298+31.7	54.7' LT.	EX.	EX.	210 WATT LED, TYPE 3
LS-C	11	1290+47.6	54.6' LT.	EX.	EX.	210 WATT LED, TYPE 3
LS-D	9	1292+50.9	58.2' LT.	EX.	EX.	210 WATT LED, TYPE 3

LIGHTING SERVICE SCHEDULE

SERVICE RUN	# OF CONDUITS	SIZE	DISTANCE (L.F.)	DESCRIPTION	INSTALLATION
307	1	1.0"	203*	(3)#6, (1)#6 GROUND	MOUNTED ON STRUCTURE

* DISTANCE CONTINUES ON ADJACENT PLAN SHEET

UNOFFICIAL WEBSITE COPY

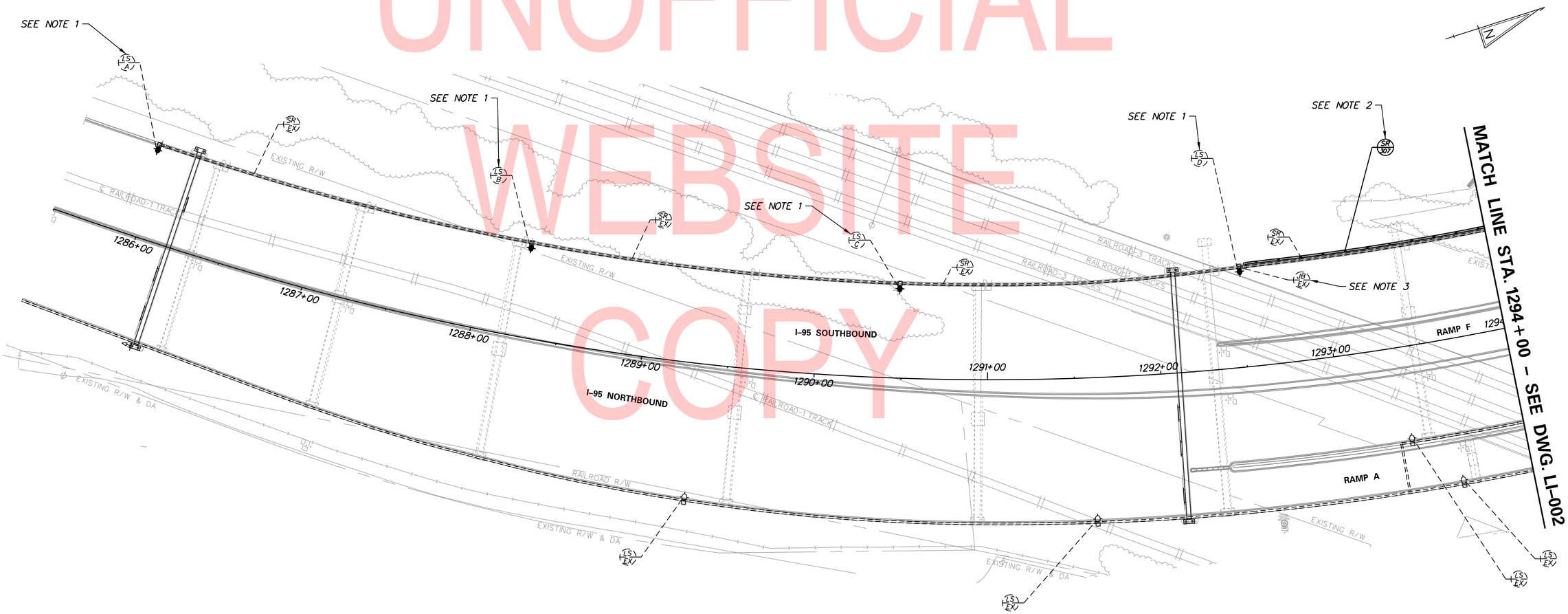

ADDENDA / REVISIONS	

SCALE: 0 30 60 90 FEET

REHABILITATION OF I-95, 2ND STREET ON-RAMP IMPROVEMENTS

CONTRACT	BRIDGE NO.	1-748S
T201907402	DESIGNED BY: WRA	
COUNTY		
NEW CASTLE	CHECKED BY: WRA	

LIGHTING PLAN

LI-001
SECTION
WRA
SHEET NO.
239

N:\31987-004\Contract_Ramp_D\CADD\Traffic\LI001.dgn
8/5/2019 8:52:51 AM

LIGHTING STANDARD SCHEDULE

NO.	CIRCUIT NO.	STATION	OFFSET	HEIGHT	ARM	LIGHT STANDARD
LS-116	8	313+10.2	26.3' RT.	40'	15'	210 WATT LED, TYPE 3
LS-117	11	1298+28.5	71.7' LT.	40'	15'	210 WATT LED, TYPE 3
LS-118	7	1295+76.0	61.8' LT.	40'	10'	210 WATT LED, TYPE 3
UL-5	7	SEE NOTE 2	-	-	-	90 WATT LED UNDERPASS LUMINAIRE, TYPE 4

JUNCTION BOX SCHEDULE

NO.	SERVICE	STATION	OFFSET	INSTALLATION	SIZE
JB-407	LIGHTING	1297+44.3	LEFT	MOUNTED ON STRUCTURE	8"Wx8"Hx4"D
JB-408	LIGHTING	1295+75.6	LEFT	EMBEDDED IN STRUCTURE	20"Wx8"Hx8"D
JB-409	LIGHTING	1297+53.7	LEFT	EMBEDDED IN STRUCTURE	20"Wx8"Hx8"D
JB-410	LIGHTING	1298+28.5	LEFT	EMBEDDED IN STRUCTURE	20"Wx8"Hx8"D
JB-411	LIGHTING	313+64.6	RIGHT	EMBEDDED IN STRUCTURE	20"Wx8"Hx8"D
JB-412	LIGHTING	313+10.2	RIGHT	EMBEDDED IN STRUCTURE	20"Wx8"Hx8"D
JB-417	LIGHTING	1294+63.5	LEFT	EMBEDDED IN STRUCTURE	20"Wx8"Hx8"D
JB-418	ITMS POWER	1295+65.6	LEFT	EMBEDDED IN STRUCTURE	20"Wx8"Hx8"D
JB-419	ITMS POWER	1298+38.5	LEFT	EMBEDDED IN STRUCTURE	20"Wx8"Hx8"D
JB-420	ITMS POWER	313+74.6	RIGHT	EMBEDDED IN STRUCTURE	20"Wx8"Hx8"D
JB-421	ITMS POWER	313+20.1	RIGHT	EMBEDDED IN STRUCTURE	20"Wx8"Hx8"D

NOTES:

1. SEE LI-002A FOR DETAILS OF LIGHTING EQUIPMENT INSTALLATION ADJACENT TO MARYLAND AVENUE AND BELOW THE BRIDGE DECK WITHIN THE AREA SHOWN.
2. INSTALL UNDERPASS LUMINAIRE OVER THE EASTERNMOST PIER COLUMN AS SHOWN. INSTALL UNDERPASS LUMINAIRE AND CONDUIT FOLLOWING DETAIL A - UNDERPASS LUMINAIRE AND CONDUIT DETAIL ON LI-103.
3. INSTALL CONDUIT ALONG THE BACK SIDE OF THE PROPOSED AND EXISTING PARAPET FROM THE PROPOSED PARAPET EMBEDDED JUNCTION BOX AT STA. 1294+60 TO THE EXISTING EMBEDDED JUNCTION BOX AT STA. 1292+55. ATTACH CONDUIT TO THE PARAPET FOLLOWING THE CONDUIT INSTALLATION REQUIREMENT SHOWN ON LI-103.
4. INSTALL UNDERPASS LUMINAIRE AND CONDUIT BETWEEN BRIDGE PARAPET AND IN-GROUND JUNCTION WELL FOLLOWING DETAIL B - UNDERPASS LUMINAIRE AND IN-GROUND CONDUIT TRANSITION DETAIL ON LI-103. SEE LI-002A FOR CONTINUATION.
5. UTILIZE THE CONDUIT EXITING THE BOTTOM OF THE PROPOSED PARAPET FOR SR-307 TO CONNECT TO THE PROPOSED PARAPET EMBEDDED JUNCTION BOX. SPLICE THE PROPOSED CABLES TO THE PROPOSED CABLES WITHIN THE JUNCTION BOX WHICH CONTINUE THROUGH THE PROPOSED PARAPET TO THE PROPOSED LIGHTING STANDARDS TO THE NORTH.

LIGHTING SERVICE SCHEDULE

SERVICE RUN	# OF CONDUITS	SIZE	DISTANCE (L.F.)	DESCRIPTION	INSTALLATION
306	2	2.0"	110	(3)#6, (1)#6 GROUND	EMBEDDED IN STRUCTURE
307	1	1.0"	203*	(3)#6, (1)#6 GROUND	MOUNTED ON STRUCTURE
413	2	2.0"	177	(4)#6, (1)#6 GROUND	EMBEDDED IN STRUCTURE
414	1	2.0"	15	(2)#10, (1)#10 GROUND	MOUNTED ON STRUCTURE
415	2	2.0"	75	(4)#6, (1)#6 GROUND	EMBEDDED IN STRUCTURE
416	2	2.0"	199	(4)#6, (1)#6 GROUND	EMBEDDED IN STRUCTURE
417	2	2.0"	68	(4)#6, (1)#6 GROUND	EMBEDDED IN STRUCTURE
418	2	2.0"	157*	(4)#6, (1)#6 GROUND	EMBEDDED IN STRUCTURE
419	1	1.0"	35	(2)#10, (1)#10 GROUND	MOUNTED ON STRUCTURE

* DISTANCE CONTINUES ON ADJACENT PLAN SHEET

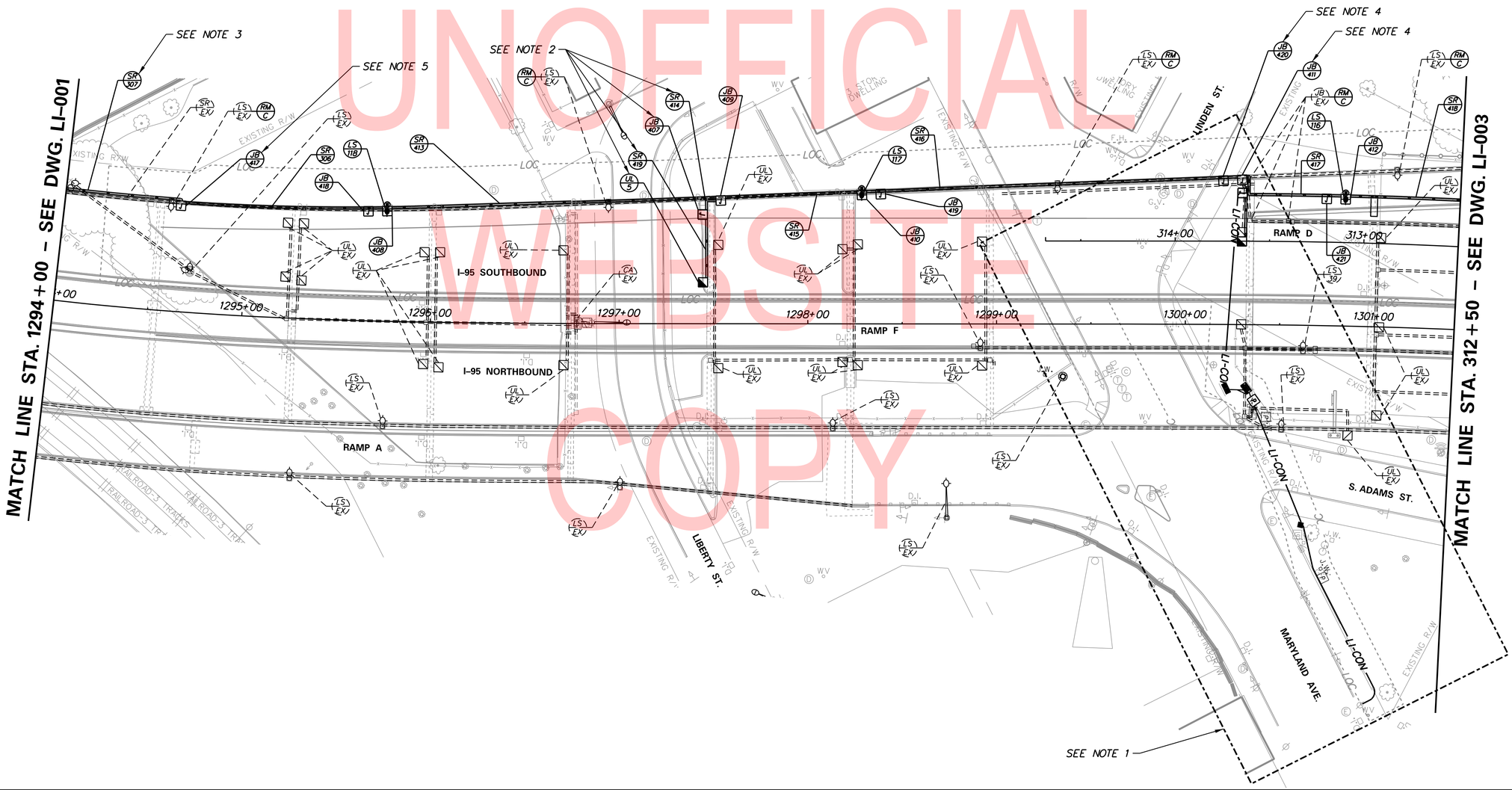

UNOFFICIAL WEBSITE COPY

ADDENDA / REVISIONS	

SCALE 0 30 60 90 FEET

REHABILITATION OF I-95, 2ND STREET ON-RAMP IMPROVEMENTS

CONTRACT	BRIDGE NO.	1-748S, 1-750
T201907402	DESIGNED BY: WRA	
COUNTY	CHECKED BY: WRA	
NEW CASTLE		

LIGHTING PLAN

LI-002

SECTION	SHEET NO.
WRA	240

N:\31987-004\Contract1_Ramp_D\CADD\Traffic\LI002.dgn
8/5/2019 8:52:52 AM

LIGHTING STANDARD SCHEDULE

NO.	CIRCUIT NO.	STATION	OFFSET	HEIGHT	ARM	LIGHT STANDARD
UL-24	EX.	-	-	-	-	EXISTING
UL-25	9	SEE NOTE 10	-	-	-	90 WATT UNDERPASS LUMINAIRE, TYPE 4

LIGHTING SERVICE SCHEDULE

SERVICE RUN	# OF CONDUITS	SIZE	DISTANCE (L.F.)	DESCRIPTION	INSTALLATION
421	1	3.0"	110*	(4)#3/0, (1)#2 GROUND	TRENCH
422	1	4.0"	71*	(4)#3/0, (1)#2 GROUND	OPEN CUT
423	1	3.0"	8*	(4)#3/0, (1)#2 GROUND	TRENCH
424	4	4.0"	11	(8)#6, (1)#6 GROUND IN 1 CONDUIT (12)#6, (1)#6 GROUND IN 1 CONDUIT 2 CONDUITS ARE SPARES	TRENCH
427	2	2.0"	130*	(8)#6, (1)#6 GROUND	TRENCH/MOUNTED ON STRUCTURE
428	2	2.0"	20*	(8)#6, (1)#6 GROUND	MOUNTED ON STRUCTURE
429	1	1.0"	29*	(2)#10, (1)#10 GROUND	MOUNTED ON STRUCTURE

*GALVANIZED RIGID CONDUIT

JUNCTION BOX SCHEDULE

NO.	SERVICE	STATION	OFFSET	INSTALLATION	SIZE
JB-416	LIGHTING	SEE NOTE 9	-	MOUNTED ON STRUCTURE	18"Wx18"Hx8"D

NOTES:

1. INSTALL ELECTRICAL SERVICE ON PEDESTAL WITH 200 AMP 277/480V 3 PHASE 4 WIRE ELECTRIC SERVICE PER DETAIL ON LI-102.
2. INSTALL CABINET BASE AS PER STD. NO. T-4 WITH 3 INCH AND 4 INCH CONDUIT SWEEPS, UNUSUSED CONDUIT SWEEPS SHALL BE CAPPED. INSTALL LIGHTING CONTROL AND DISTRIBUTION ENCLOSURE (SOUTH CABINET). SEE LIGHTING CONTROL AND DISTRIBUTION ENCLOSURE DETAILS ON DWG. NO. LI-102.
3. SEE DWG. NO. LI-102 FOR LIGHTING CONTROL AND DISTRIBUTION ENCLOSURE WIRING DIAGRAM. SEE DWG. NO. LI-102 FOR PANEL SCHEDULE.
4. INSTALL UNDERPASS LUMINAIRE AND CONDUIT BETWEEN BRIDGE PARAPET AND IN-GROUND JUNCTION WELL FOLLOWING DETAIL B - UNDERPASS LUMINAIRE AND IN-GROUND CONDUIT TRANSITION DETAIL ON LI-103. SEE LI-002 FOR CONTINUATION.
5. THE CONTRACTOR SHALL TURN UP THE CONDUIT AT THE BASE OF THE EXISTING UTLITY POLE AND PROVIDE 30 FEET OF SLACK FOR EACH CONDUCTOR COILED FOR DELMARVA POWER TO MAKE FINAL CONNECTIONS.
6. INSTALL PROPOSED JUNCTION BOX JB-416 VERTICALLY CENTERED ON PIER CAP SPACED 4' FROM THE NORTH END OF THE PIER CAP AS DIMENSIONED ON THE PLAN.

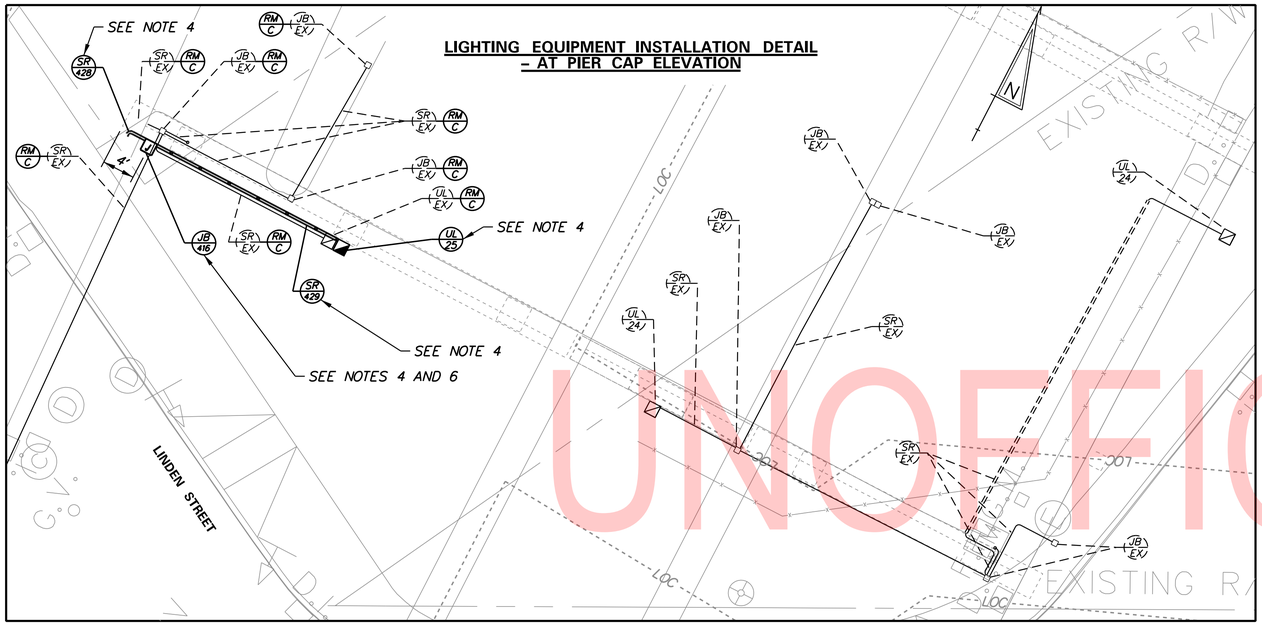

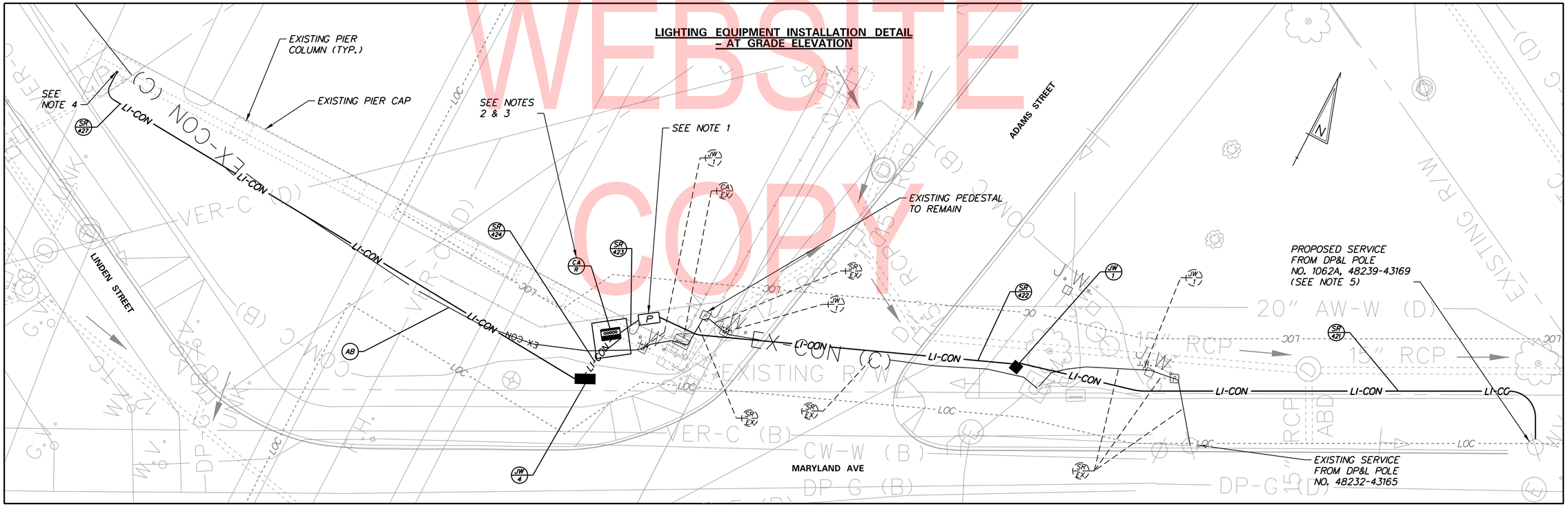

UNOFFICIAL WEBSITE COPY

ADDENDA / REVISIONS	

SCALE 0 10 20 30 FEET

REHABILITATION OF I-95, 2ND STREET ON-RAMP IMPROVEMENTS

CONTRACT	BRIDGE NO.	1-748S, 1-750
T201907402	DESIGNED BY: WRA	
COUNTY		
NEW CASTLE	CHECKED BY: WRA	

LIGHTING PLAN

LI-002A

SECTION	SHEET NO.
WRA	241

N:\31987-00A\Contract_Ramp_D\CADD\Traffic\LI002A.dgn
8/5/2019 8:52:53 AM

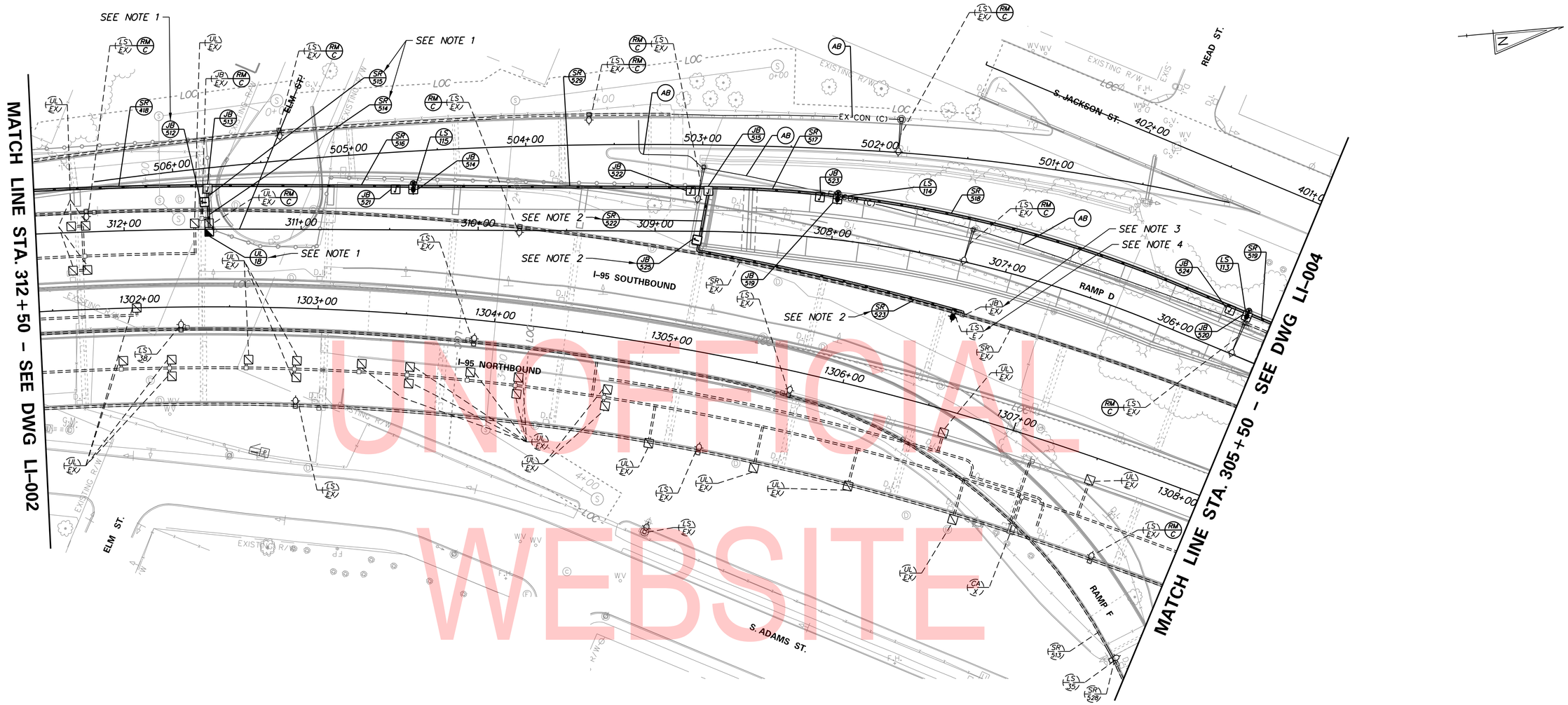

UNOFFICIAL WEBSITE COPY

NOTES:

1. INSTALL UNDERPASS LUMINAIRE OVER THE WESTERNMOST PIER COLUMN AS SHOWN. INSTALL UNDERPASS LUMINAIRE AND CONDUIT FOLLOWING DETAIL A - UNDERPASS LUMINAIRE AND CONDUIT DETAIL ON LI-103.
2. INSTALL JB-525 ON THE FACE OF THE PROPOSED ABUTMENT AS SHOWN. INSTALL CONDUIT FROM THE PROPOSED PARAPET EMBEDDED JUNCTION BOX JB-515 TO JB-525. INSTALL CONDUIT FROM JB-525 TO THE EXISTING PARAPET EMBEDDED JUNCTION BOX AT STA. 1306+55. ATTACH CONDUIT TO THE PARAPETS FOLLOWING THE CONDUIT INSTALLATION REQUIREMENTS SHOWN ON LI-103.
3. CORE A HOLE THROUGH THE BACK SIDE OF THE PARAPET INTO EXISTING PARAPET EMBEDDED JUNCTION BOX AT STA. 1306+55 FOR SR-523 TO ENTER THE JUNCTION BOX. SPLICE THE PROPOSED CABLES TO THE EXISTING CABLES WITHIN THE JUNCTION BOX WHICH CONTINUE THROUGH THE EXISTING PARAPET TO THE EXISTING LIGHTING STANDARDS TO THE NORTH.
4. EXISTING STRUCTURE MOUNTED POLE, ARM AND WIRING TO REMAIN. DISCONNECT AND REMOVE EXISTING HIGH PRESSURE SODIUM LUMINAIRE AND REPLACE WITH A 210 WATT LED LUMINAIRE WITH A TYPE 3 DISTRIBUTION.

LIGHTING STANDARD SCHEDULE

NO.	CIRCUIT NO.	STATION	OFFSET	HEIGHT	ARM	LIGHT STANDARD
LS-113	12	305+64.2	26.3' RT.	40'	15'	210 WATT LED, TYPE 3
LS-114	8	307+99.4	26.3' RT.	40'	15'	210 WATT LED, TYPE 3
LS-115	10	310+36.7	26.3' RT.	40'	15'	210 WATT LED, TYPE 3
LS-E	8	1306+49.5	54.7' LT.	EX.	EX.	210 WATT LED, TYPE 3
UL-18	10	SEE NOTE 1	-	-	-	90 WATT LED UNDERPASS LUMINAIRE, TYPE 4

LIGHTING SERVICE SCHEDULE

SERVICE RUN	# OF CONDUITS	SIZE	DISTANCE (L.F.)	DESCRIPTION	INSTALLATION
418	2	2.0"	157*	(4)#6, (1)#6 GROUND	EMBEDDED IN STRUCTURE
514	1	1.0"	20	(2)#10, (1)#10 GROUND	MOUNTED ON STRUCTURE
515	1	2.0"	10	(2)#10, (1)#10 GROUND	MOUNTED ON STRUCTURE
516	2	2.0"	115	(4)#6, (1)#6 GROUND	EMBEDDED IN STRUCTURE
517	2	2.0"	69	(4)#6, (1)#6 GROUND	EMBEDDED IN STRUCTURE
518	2	2.0"	238	(4)#6, (1)#6 GROUND	EMBEDDED IN STRUCTURE
519	2	2.0"	41*	(3)#6, (1)#6 GROUND	EMBEDDED IN STRUCTURE
522	1	2.0"	35	(3)#6, (1)#6 GROUND	MOUNTED ON STRUCTURE
523	1	1.0"	180	(3)#6, (1)#6 GROUND	MOUNTED ON STRUCTURE
529	2	2.0"	165	(4)#6, (1)#6 GROUND	EMBEDDED IN STRUCTURE

* DISTANCE CONTINUES ON ADJACENT PLAN SHEET

JUNCTION BOX SCHEDULE

NO.	SERVICE	STATION	OFFSET	INSTALLATION	SIZE
JB-512	LIGHTING	311+54.3	RIGHT	MOUNTED ON STRUCTURE	8"Wx8"Hx4"D
JB-513	LIGHTING	311+52.7	RIGHT	EMBEDDED IN STRUCTURE	20"Wx8"Hx8"D
JB-514	LIGHTING	310+36.7	RIGHT	EMBEDDED IN STRUCTURE	20"Wx8"Hx8"D
JB-515	LIGHTING	308+70.2	RIGHT	EMBEDDED IN STRUCTURE	20"Wx8"Hx8"D
JB-519	LIGHTING	307+99.4	RIGHT	EMBEDDED IN STRUCTURE	20"Wx8"Hx8"D
JB-520	LIGHTING	305+64.2	RIGHT	EMBEDDED IN STRUCTURE	20"Wx8"Hx8"D
JB-521	ITMS POWER	310+46.7	RIGHT	EMBEDDED IN STRUCTURE	20"Wx8"Hx8"D
JB-522	ITMS POWER	308+80.0	RIGHT	EMBEDDED IN STRUCTURE	20"Wx8"Hx8"D
JB-523	ITMS POWER	308+9.0	RIGHT	EMBEDDED IN STRUCTURE	20"Wx8"Hx8"D
JB-524	ITMS POWER	305+74.2	RIGHT	EMBEDDED IN STRUCTURE	20"Wx8"Hx8"D
JB-525	LIGHTING	308+75.8	RIGHT	MOUNTED ON STRUCTURE	18"Wx18"Hx8"D

ADDENDA / REVISIONS

SCALE 0 30 60 90 FEET

REHABILITATION OF I-95, 2ND STREET ON-RAMP IMPROVEMENTS

CONTRACT	BRIDGE NO.	1-748S, 1-750
T201907402	DESIGNED BY: WRA	
COUNTY		
NEW CASTLE	CHECKED BY: WRA	

LIGHTING PLAN

LI-003
SECTION WRA
SHEET NO. 242

N:\31987-004\Contract_Ramp_D\CADD\Traffic\LI003.dgn
8/5/2019 8:52:54 AM

NOTES:

1. TRANSITION CONDUIT INTO PROPOSED CONCRETE BARRIER CONDUIT SYSTEM. SEE DETAIL ON RD-07.
2. INSTALL UNDERPASS LUMINAIRED ON THE FACE OF THE PROPOSED ABUTMENT AS SHOWN. INSTALL UNDERPASS LUMINAIRE AND CONDUIT FOLLOWING DETAIL A - UNDERPASS LUMINAIRE AND CONDUIT DETAIL ON LI-103.
3. EXISTING STRUCTURE MOUNTED POLE, ARM AND WIRING TO REMAIN. DISCONNECT AND REMOVE EXISTING HIGH PRESSURE SODIUM LUMINAIRE AND REPLACE WITH A PROPOSED LED LUMINAIRE.
4. SEE LI-004A FOR DETAILS OF LIGHTING EQUIPMENT INSTALLATION ADJACENT TO LANCASTER AVENUE AND WITHIN THE DART PARKING LOT.
5. INSTALL PROPOSED LUMINAIRE UL-9 IN PLACE OF EXISTING LUMINAIRE TO BE REMOVED. COUPLE LUMINAIRE WITH EXISITING CONDUIT AND CONNECT WITH EXISITING WIRING. REFER TO UNDERPASS LUMINAIRE DETAILS ON LI-103.

LIGHTING STANDARD SCHEDULE

NO.	CIRCUIT NO.	STATION	OFFSET	HEIGHT	ARM	LIGHT STANDARD
LS-112	10	303+26.2	30.6' RT.	40'	10'	210 WATT LED, TYPE 3
LS-F	12	1308+83.9	54.5' LT.	EX.	EX.	210 WATT LED, TYPE 3
LS-G	8	1311+22.4	54.6' LT.	EX.	EX.	210 WATT LED, TYPE 3
LS-H	12	1313+60.6	54.7' LT.	EX.	EX.	210 WATT LED, TYPE 3
UL-7	8	SEE NOTE 5	-	-	-	90 WATT LED UNDERPASS LUMINAIRE, TYPE 4
UL-9	8	SEE NOTE 6	-	-	-	90 WATT LED UNDERPASS LUMINAIRE, TYPE 4

JUNCTION BOX SCHEDULE

NO.	SERVICE	STATION	OFFSET	INSTALLATION	SIZE
JB-609	LIGHTING	305+23.1	RIGHT	MOUNTED ON STRUCTURE	8"Wx8"Hx4"D
JB-610	LIGHTING	303+92.0	RIGHT	EMBEDDED IN STRUCTURE	20"Wx8"Hx8"D
JB-611	LIGHTING	305+19.0	RIGHT	EMBEDDED IN STRUCTURE	20"Wx8"Hx8"D
JB-612	ITMS POWER	303+88.1	RIGHT	EMBEDDED IN STRUCTURE	20"Wx8"Hx8"D

LIGHTING SERVICE SCHEDULE

SERVICE RUN	# OF CONDUITS	SIZE	DISTANCE (L.F.)	DESCRIPTION	INSTALLATION
519	2	2.0"	41*	(3)#6,(1)#6 GROUND	EMBEDDED IN STRUCTURE
520	1	2.0"	11	(2)#10,(1)#10 GROUND	MOUNTED ON STRUCTURE
521	2	2.0"	128	(2)#6,(1)#6 GROUND	EMBEDDED IN STRUCTURE
612	1	1.0"	11	(2)#10,(1)#10 GROUND	MOUNTED ON STRUCTURE
613	2	2.0"	47	(2)#6,(1)#6 GROUND	TRENCH
614	1	3.0"	16	(2)#6,(1)#6 GROUND	TRENCH

* DISTANCE CONTINUES ON ADJACENT PLAN SHEET

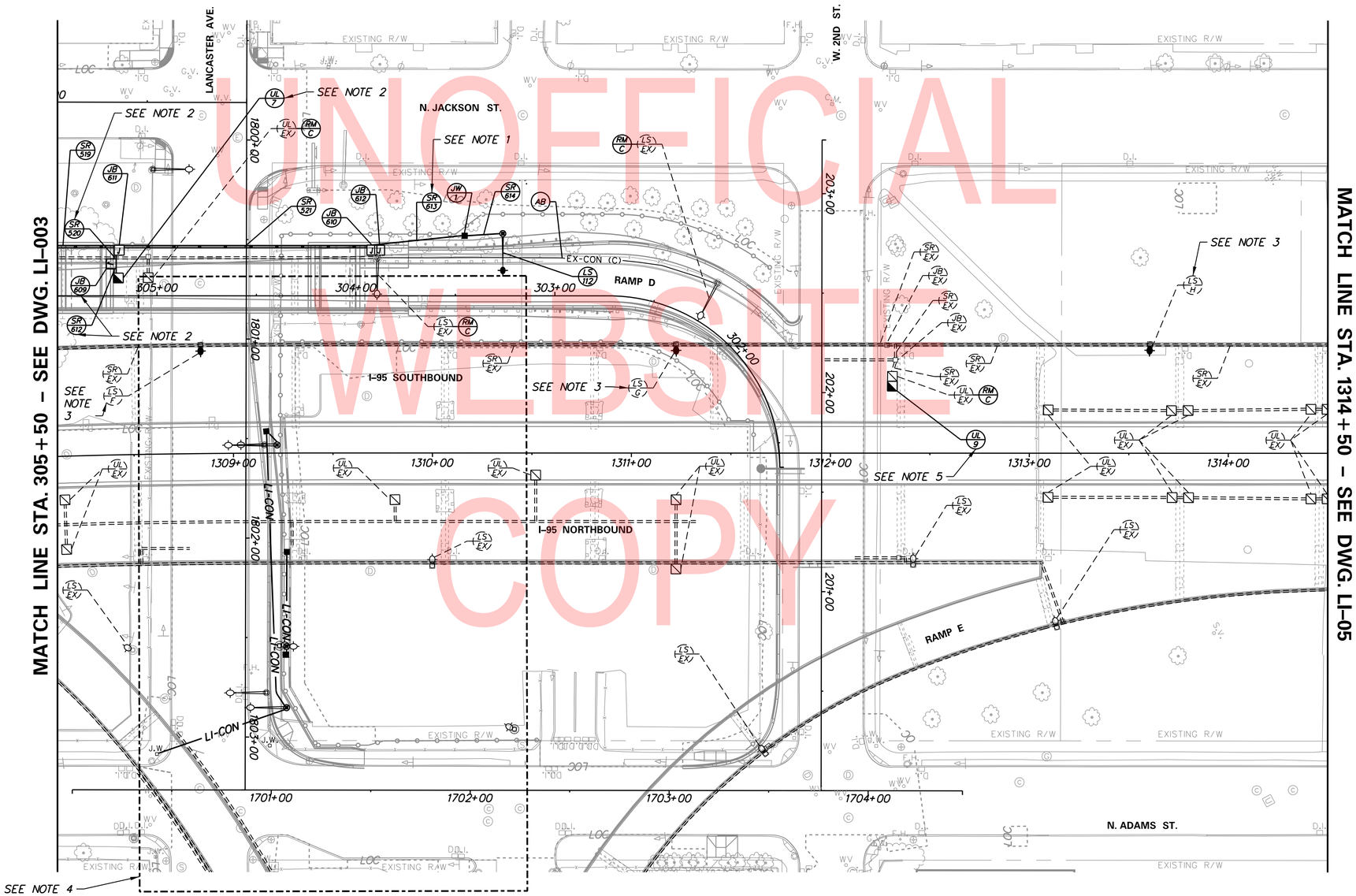

UNOFFICIAL WEBSITE COPY

ADDENDA / REVISIONS

SCALE 0 30 60 90 FEET

REHABILITATION OF I-95, 2ND STREET ON-RAMP IMPROVEMENTS

CONTRACT	BRIDGE NO.	1-748S, 1-750
T201907402	DESIGNED BY: WRA	
COUNTY		
NEW CASTLE	CHECKED BY: WRA	

LIGHTING PLAN

LI-004
SECTION
WRA
SHEET NO.
243

N:\31987-004\Contract_Ramp_D\CADD\Traffic\LI004.dgn
8/5/2019 8:52:56 AM

NOTES:

1. RELOCATE EXISTING LIGHTING STANDARD, BREAKAWAY TRANSFORMER BASE, AND LUMINAIRE TO PROPOSED FOUNDATION. REMOVE EXISTING FOUNDATION. THE CONTRACTOR SHALL VERIFY THE ANCHOR BOLT CIRCLE AND BOLT SIZE OF THE EXISTING BREAKAWAY TRANSFORMER BASE FOR INSTALLATION IN THE PROPOSED FOUNDATION.
2. RELOCATE EXISTING LIGHTING STANDARD AND LUMINAIRE TO PROPOSED EXTENDED POLE BASE. REMOVE EXISTING FOUNDATION. REFER TO LI-101 FOR EXTENDED POLE BASE DETAIL. THE CONTRACTOR SHALL VERIFY THE ANCHOR BOLT CIRCLE AND BOLT SIZE OF THE EXISTING LIGHT POLE FOR INSTALLATION IN THE PROPOSED FOUNDATION.
3. LOCATE AND INTERCEPT THE EXISTING CONDUIT WITH A PROPOSED TYPE 1 JUNCTION WELL. CUT AND/OR PULL BACK THE EXISTING CABLES IN THE CONDUIT TO THE PROPOSED JUNCTION WELL SO THAT ELECTRICAL SERVICE IS MAINTAINED TO THE WEST AND SUFFICIENT CABLE LENGTH IS AVAILABLE FOR SPLICING TO THE PROPOSED CABLES IN PROPOSED SERVICE RUNS 615 AND 616.
4. LOCATE AND INTERCEPT THE EXISTING CONDUIT WITH A PROPOSED TYPE 1 JUNCTION WELL. CUT AND/OR PULL BACK THE EXISTING CABLES IN THE CONDUIT TO THE PROPOSED JUNCTION WELL SO THAT ELECTRICAL SERVICE IS MAINTAINED UP THE PIER AND SUFFICIENT CABLE LENGTH IS AVAILABLE FOR SPLICING TO THE PROPOSED CABLES IN PROPOSED SERVICE RUN 618.
5. LOCATE AND INTERCEPT THE EXISTING CONDUIT WITH A PROPOSED TYPE 1 JUNCTION WELL. CUT AND/OR PULL BACK THE EXISTING CABLES IN THE CONDUIT TO THE PROPOSED JUNCTION WELL SO THAT ELECTRICAL SERVICE IS MAINTAINED TO THE NORTH AND SUFFICIENT CABLE LENGTH IS AVAILABLE FOR SPLICING TO THE PROPOSED CABLES IN PROPOSED SERVICE RUN 619.
6. SPLICE THE PROPOSED CABLES TO THE EXISTING CABLES IN THE EXISTING JUNCTION WELL.
7. THE ELECTRICAL CABLES SHALL BE RECONNECTED TO THE SAME CIRCUIT AND PHASE SO THAT THE RELOCATED LIGHT POLE OPERATES OFF OF THE SAME CIRCUIT AND PHASE AS IS EXISTING.

LIGHTING STANDARD SCHEDULE

NO.	CIRCUIT NO.	STATION	OFFSET	HEIGHT	ARM	LIGHT STANDARD
LS-L	SEE NOTE 7	1801+53.2	15.7' LT.	EX.	EX.	EXISTING
LS-M	SEE NOTE 7	1802+85.2	20.7' LT.	EX.	EX.	EXISTING
LS-N	SEE NOTE 7	1802+54.4	20.7' LT.	EX.	EX.	EXISTING (DART PARKING FACILITY)

LIGHTING SERVICE SCHEDULE

SERVICE RUN	# OF CONDUITS	SIZE	DISTANCE (L.F.)	DESCRIPTION	INSTALLATION
615	1	3.0"	9	(2)#2, (1)#6 GROUND	TRENCH
616	1	3.0"	141	(3)#2, (1)#6 GROUND	TRENCH
617	1	3.0"	70	(3)#2, (1)#6 GROUND	OPEN CUT
618	1	3.0"	48	(3)#6, (1)#6 GROUND	TRENCH
619	1	3.0"	5	(3)#6, (1)#6 GROUND	TRENCH

* DISTANCE CONTINUES ON ADJACENT PLAN SHEET

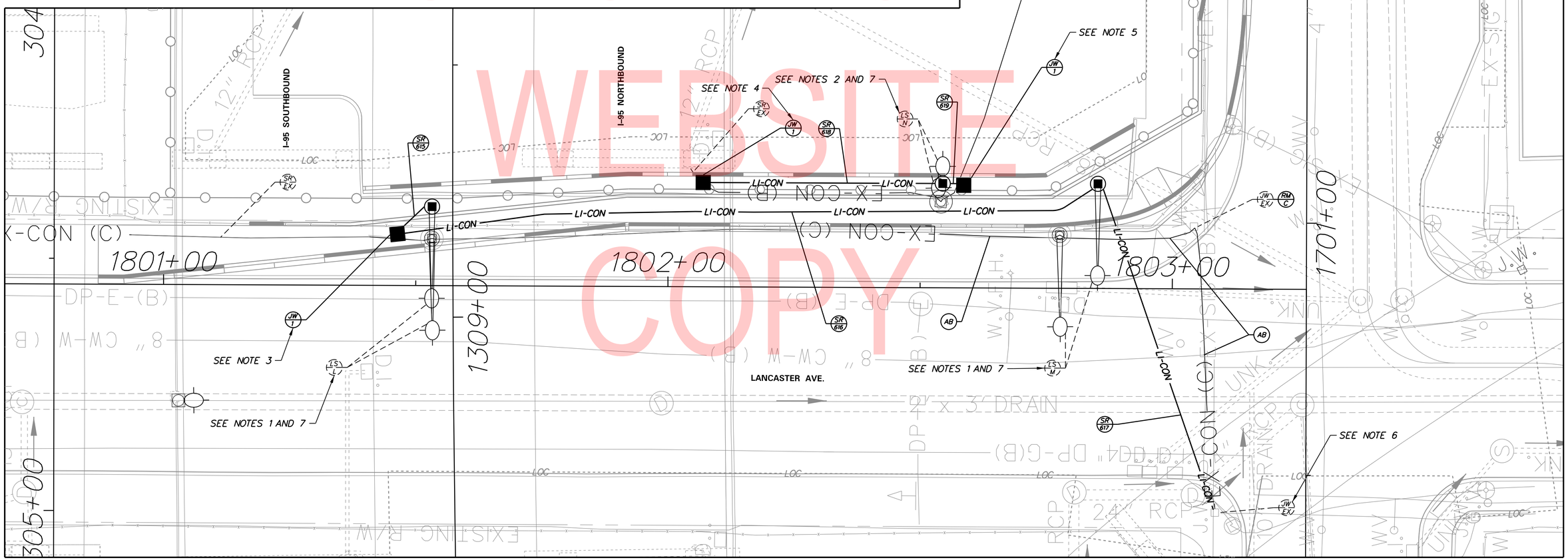

LIGHTING EQUIPMENT INSTALLATION DETAIL – AT GRADE ELEVATION

UNOFFICIAL WEBSITE COPY

ADDENDA / REVISIONS	

SCALE 0 10 20 30 FEET

REHABILITATION OF I-95, 2ND STREET ON-RAMP IMPROVEMENTS

CONTRACT	BRIDGE NO.
T201907402	DESIGNED BY: WRA
COUNTY	CHECKED BY: WRA
NEW CASTLE	

LIGHTING PLAN

LI-004A

SECTION	SHEET NO.
WRA	244

N:\31987-004\Contract_Ramp_D\CADD\Traffic\LI004A.dgn
8/5/2019 8:52:57 AM

NOTES:

1. EXISTING STRUCTURE MOUNTED POLE, ARM AND WIRING TO REMAIN. DISCONNECT AND REMOVE EXISTING HIGH PRESSURE SODIUM LUMINAIRE AND REPLACE WITH A PROPOSED LED LUMINAIRE.
2. INSTALL PROPOSED LUMINAIRES UL-11, 15, 20 AND 23 IN PLACE OF EXISTING LUMINAIRES TO BE REMOVED. COUPLE LUMINAIRE WITH EXISITING CONDUIT AND CONNECT WITH EXISITING WIRING. REFER TO UNDERPASS LUMINAIRE DETAILS ON LI-103.

LIGHTING STANDARD SCHEDULE

NO.	CIRCUIT NO.	STATION	OFFSET	HEIGHT	ARM	LIGHT STANDARD
LS-J	8	1315+98.8	55.0' LT.	EX.	EX.	210 WATT LED, TYPE 3
LS-K	12	1318+37.0	55.1' LT.	EX.	EX.	210 WATT LED, TYPE 3
UL-11	12	SEE NOTE 2	-	-	-	90 WATT LED UNDERPASS LUMINAIRE, TYPE 4
UL-15	12	SEE NOTE 2	-	-	-	90 WATT LED UNDERPASS LUMINAIRE, TYPE 4
UL-20	8	SEE NOTE 2	-	-	-	90 WATT LED UNDERPASS LUMINAIRE, TYPE 4
UL-23	12	SEE NOTE 2	-	-	-	90 WATT LED UNDERPASS LUMINAIRE, TYPE 4

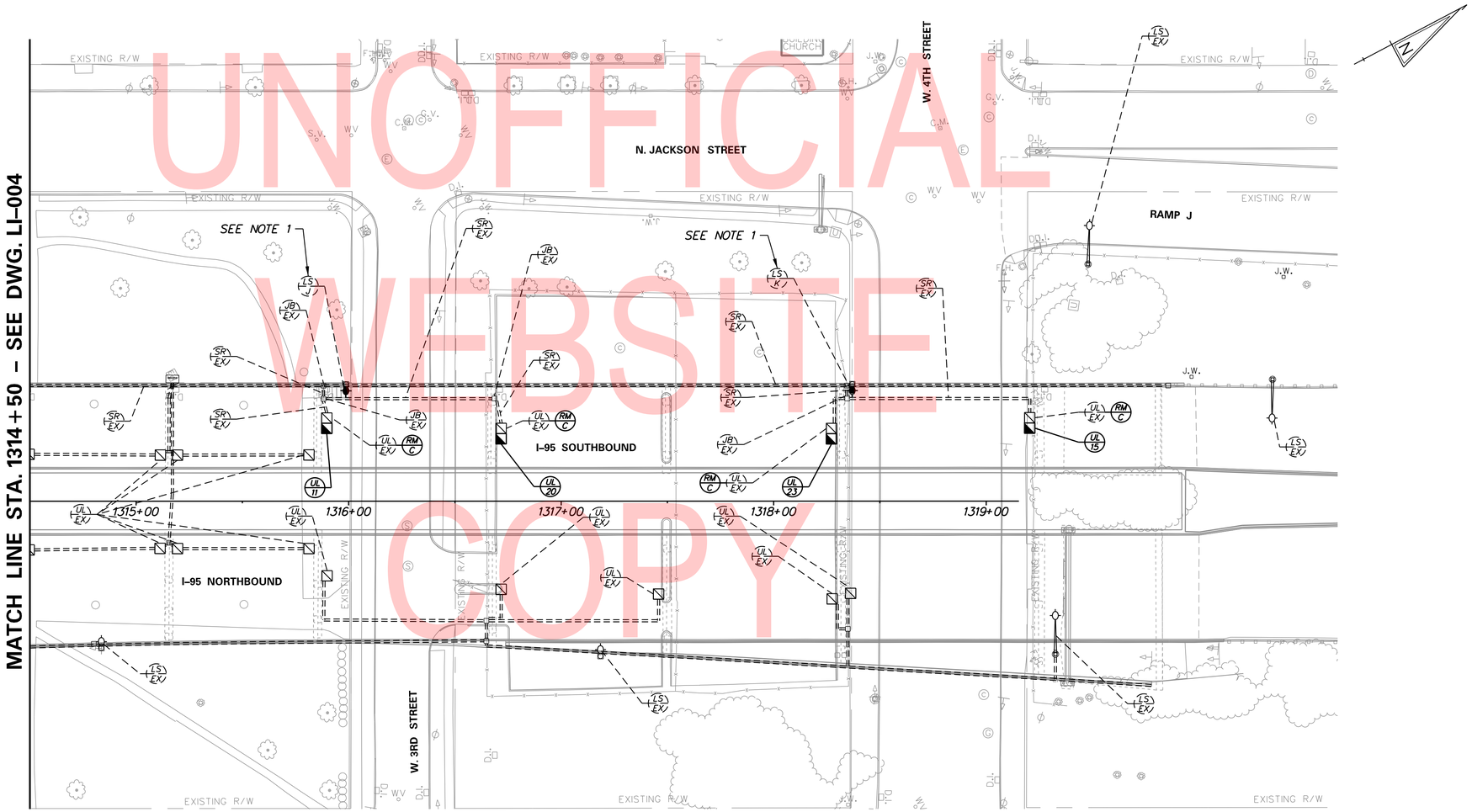

UNOFFICIAL WEBSITE COPY

N:\31987-004\Contract_Ramp_D\CADD\Traffic\LI005.dgn
8/5/2019 8:52:58 AM

ADDENDA / REVISIONS	

SCALE 0 30 60 90 FEET

REHABILITATION OF I-95, 2ND STREET ON-RAMP IMPROVEMENTS

CONTRACT	BRIDGE NO.	1-748S
T201907402	DESIGNED BY: WRA	
COUNTY		
NEW CASTLE	CHECKED BY: WRA	

LIGHTING PLAN

LI-005
SECTION
WRA
SHEET NO.
245

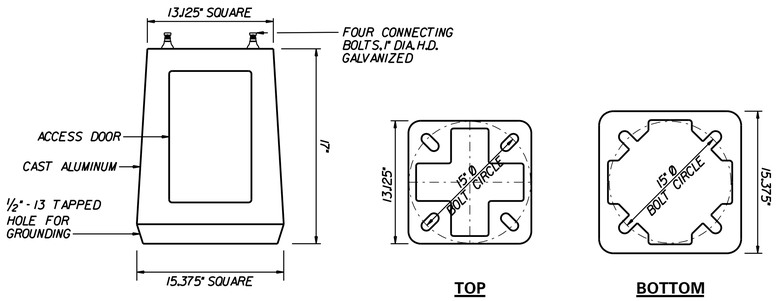

BREAKAWAY TRANSFORMER BASE DETAIL

SCALE: NONE

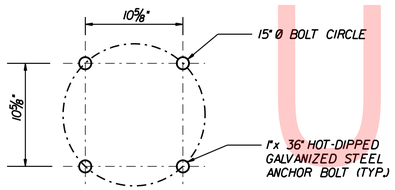

FOUNDATION ANCHOR BOLT CIRCLE DETAIL

SCALE: NONE

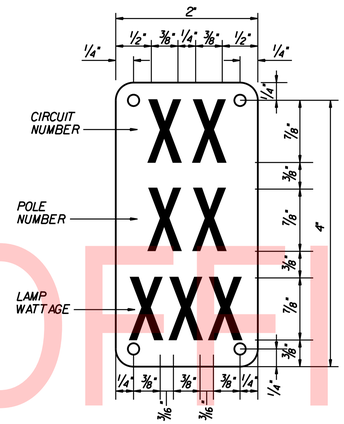

TYPICAL POLE IDENTIFICATION TAG

SCALE: NONE

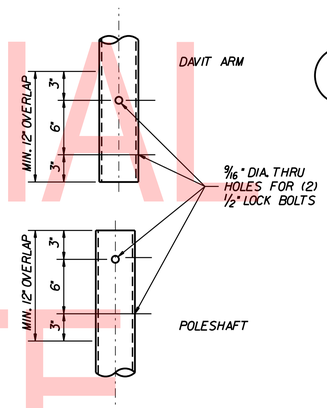

DETAIL 'A'

SCALE: NONE

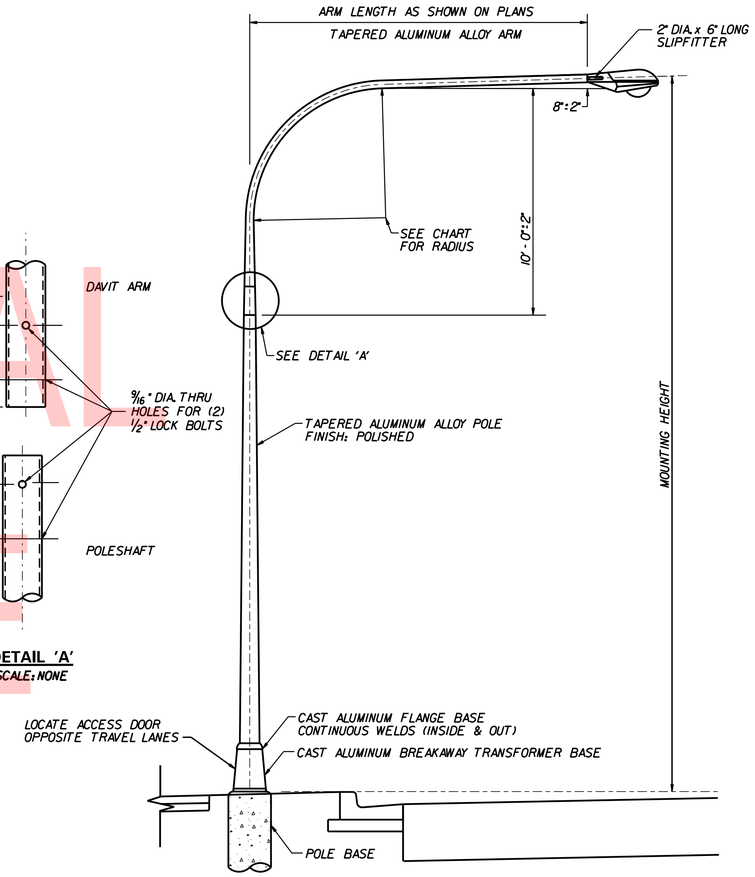

MOUNTING HEIGHT	ARM LENGTH	BEND RADIUS
UP TO 40'	5'	3'-9"
UP TO 40'	10'	5'-6"
UP TO 40'	15'	5'-6"
UP TO 40'	20'	7'-0"
UP TO 40'	25'	7'-0"

ALUMINUM LIGHTING STANDARD WITH SINGLE DAVIT ARM

SCALE: NONE

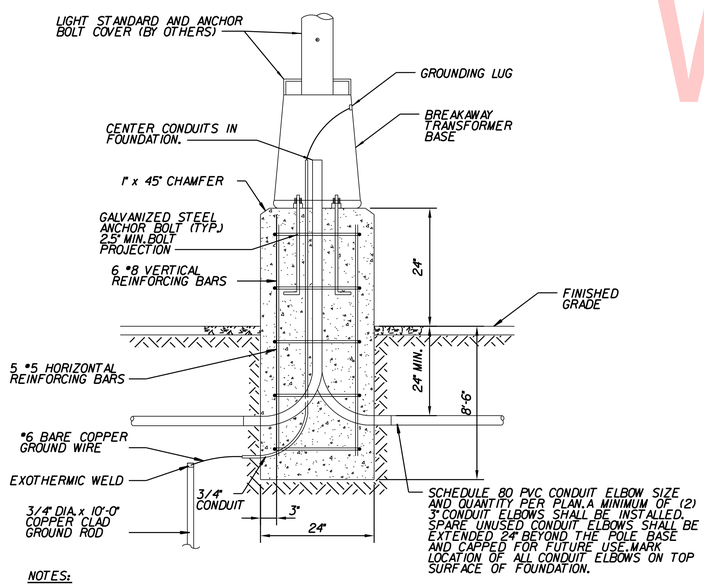

NOTES:

1. EACH EXTENDED POLE BASE WILL BE MEASURED AND PAID FOR UNDER ITEM NO.834006 - POLE BASE, TYPE 6 (1 EA) AND ITEM NO.834007 - POLE BASE EXTENSION (8 CF).

EXTENDED POLE BASE DETAIL

SCALE: NONE

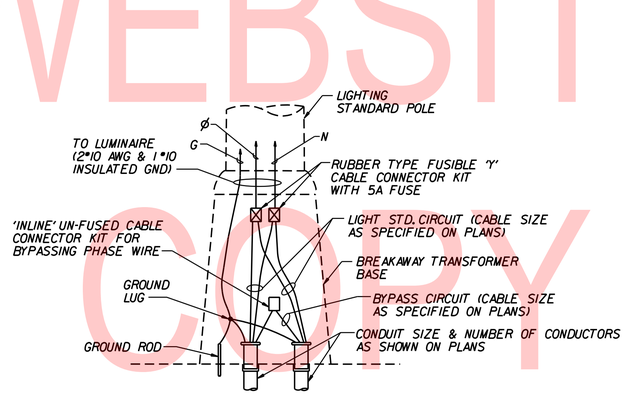

WIRING IN TRANSFORMER BASE

SCALE: NONE

UNOFFICIAL WEBSITE COPY

N:\31987-004\Contract_Ramp_DV\CADD\Traffic\LI101.dgn
8/5/2019 8:52:59 AM

ADDENDA / REVISIONS	

NOT TO SCALE

REHABILITATION OF I-95, 2ND STREET ON-RAMP IMPROVEMENTS

CONTRACT	BRIDGE NO.	
T201907402	DESIGNED BY: WRA	
COUNTY	CHECKED BY: WRA	
NEW CASTLE		

LIGHTING CONSTRUCTION DETAILS

LI-101
SECTION
WRA
SHEET NO.
246

LIGHTING CONTROL AND DISTRIBUTION ENCLOSURE WIRING DIAGRAM

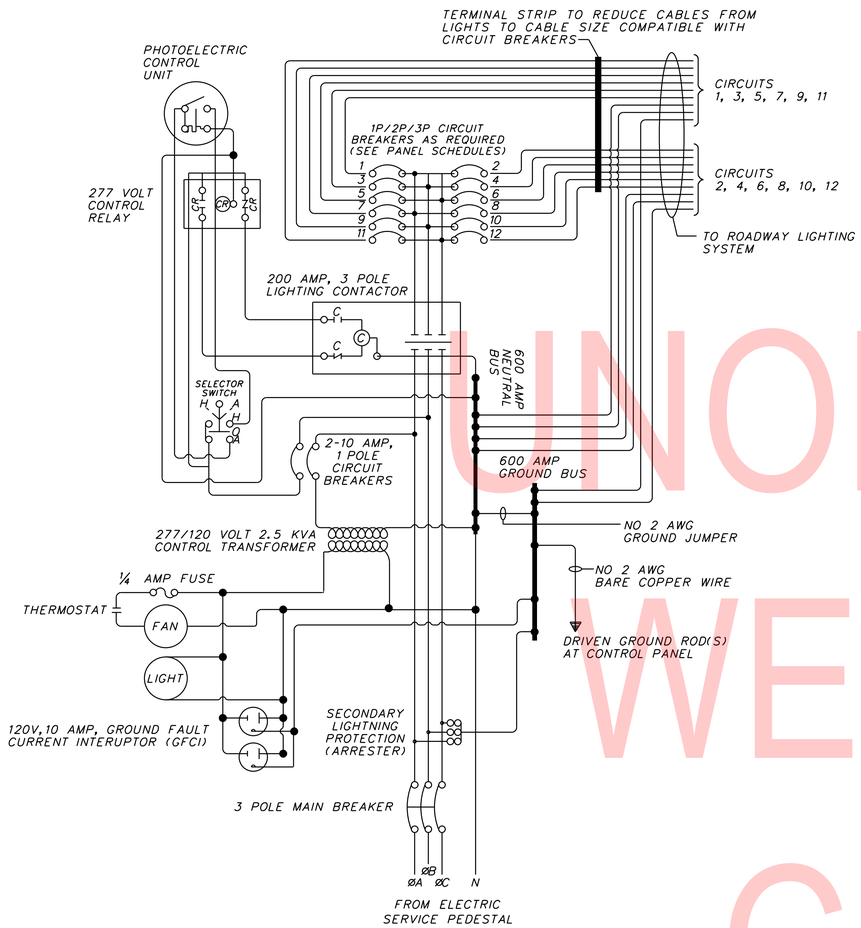

PANEL SCHEDULE - SOUTH CABINET

AIC RATING - MINIMUM 22KA
SOLID NEUTRAL
ENCLOSURE: BASE MOUNTED CABINET

600 AMP BUS
480/277 VOLTS
SURFACE MOUNTED

200 AMP MAIN
3 PHASE, 4 WIRE + GROUND
PANEL LOCATION: SEE PLANS

LOAD SERVED	CIRCUIT BREAKER			CKT. NO.	CKT. NO.	CIRCUIT BREAKER			LOAD SERVED
	FRAME	TRIP	POLE			FRAME	TRIP	POLE	
FUTURE	100			1	2	100			FUTURE
FUTURE	100	20	3	3	4	100	20	3	FUTURE
FUTURE	100			5	6	100			FUTURE
1-210W LED, 1-90W LED	100			7	8	100			5-210W LED, 3-90W LED
2-210W LED, 1-90W LED	100	20	3	9	10	100	20	3	2-210W LED, 1-90W LED
3-210W LED	100			11	12	100			4-210W LED, 3-90W LED
FUTURE	100			13	14	100			
FUTURE	100	20	3	15	16	100	20	3	SPARE
FUTURE	100			17	18	100			
PHOTOELECTRIC CONTROL	100	10	1	19	20	100			
FAN, GFCI	100	10	1	21	22	100	20	3	SPARE
SPACE	100	-	1	23	24	100			

NOTES:

1. ALL WIRING FROM SERVICE FEEDS SHALL BE INSTALLED IN FLEXIBLE CONDUIT WITHIN THE LIGHTING CONTROL AND DISTRIBUTION ENCLOSURE.
2. NO CONDUCTORS MAY ENTER OR EXIT THROUGH THE REAR OF ANY PANEL.
3. THE LIGHTING CONTACTOR, SELECTOR SWITCH, AND CONTROL RELAY SHALL BE IN A PROPERLY SIZED ENCLOSURE.
4. A CONTINUOUS GROUNDING CONDUCTOR SHALL BE INSTALLED FROM THE METER PEDESTAL DISCONNECT SWITCH THROUGH ALL PANELS, THEN TO THE GROUNDING ELECTRODE.
5. ALL CONDUCTORS NOT IN CONDUIT SHALL BE BUNDLED OR WRAPPED AND SECURED IN WIREWAYS THROUGHOUT THE CABINET AND AWAY FROM SHARP EDGES.
6. ALL CABLES SHALL MEET AMPACITY REQUIREMENTS OF THE NATIONAL ELECTRIC CODE. THE MINIMUM CABLE SIZE SHALL BE NO. 12 AWG.
7. ACTUAL NUMBER OF BREAKERS AND BREAKER RATING SHALL BE AS INDICATED ON PLANS AND RESPECTIVE PANEL SCHEDULES.
8. ALL MAIN BREAKERS AND BRANCH CIRCUIT BREAKERS SHALL BE INSTALLED IN A PANEL BOARD PER THE STANDARD SPECIFICATIONS. NO LUGS OR BUS BARS SHALL BE EXPOSED.
9. PROVIDE INTERIOR LED CABINET LIGHTING MOUNTED OVERHEAD IN CABINET OR ON FLEXIBLE ARM. INTERIOR LED CABINET LIGHTING SHALL BE INCIDENTAL TO THE LIGHTING CONTROL CABINET ITEM.

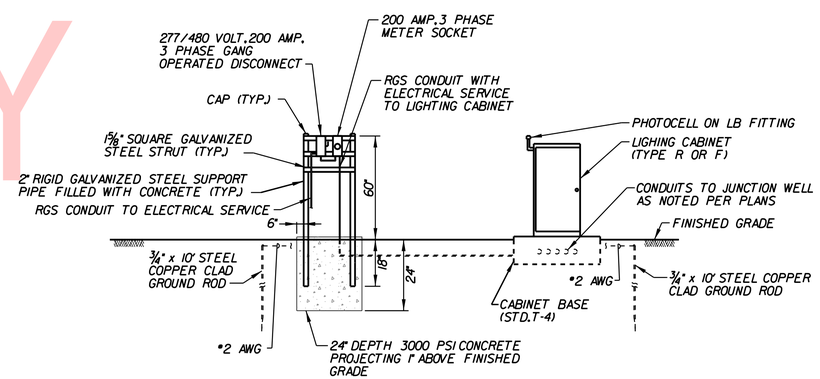

ELECTRICAL SERVICE ON PEDESTAL AND LIGHTING CONTROL AND DISTRIBUTION ENCLOSURE

SCALE: NONE

UNOFFICIAL WEBSITE COPY

N:\31987-004\Contract_Ramp_D\CADD\Traffic\LI102.dgn
8/5/2019 8:53:00 AM

ADDENDA / REVISIONS	

NOT TO SCALE

REHABILITATION OF I-95, 2ND STREET ON-RAMP IMPROVEMENTS

CONTRACT	BRIDGE NO.
T201907402	DESIGNED BY: WRA
COUNTY	
NEW CASTLE	CHECKED BY: WRA

LIGHTING CONSTRUCTION DETAILS

LI-102
SECTION
WRA
SHEET NO.
247

NOTES:

1. THE STRUCTURAL ELEMENTS DEPICTED ON THIS PLAN ARE FOR GRAPHICAL PRESENTATION ONLY TO DEPICT THE GENERAL PLACEMENT AND ARRANGEMENT OF LIGHTING EQUIPMENT AND ASSOCIATED CONDUITS AND JUNCTION BOXES. THE STRUCTURAL PLANS SHALL BE REFERENCED FOR TRUE STRUCTURAL DIMENSIONS AND DETAILS.
2. THE CONDUITS DEPICTED ON THESE DETAILS DEPICT TYPICAL CONFIGURATIONS AND METHODS FOR ROUTING CONDUIT BETWEEN IN GROUND AND STRUCTURALLY MOUNTED OR EMBEDDED LIGHTING EQUIPMENT. THE CONTRACTOR SHALL INSTALL CONDUITS USING THE METHODS SHOWN, AS THE CONDITIONS AT EACH STRUCTURE LOCATION DICTATE AND TO MEET THE REQUIREMENTS SHOWN ON THESE DETAILS AND THE NEC.
3. ALL UNDERPASS LUMINAIRES, CONDUIT, STRAPS AND JUNCTION BOXES SHALL BE ATTACHED TO CONCRETE STRUCTURES USING 1/4" STAINLESS STEEL WEDGE ANCHORS WITH A MINIMUM EMBEDMENT OF 2" AND A MINIMUM TENSILE PULLOUT STRENGTH OF 500 LBS. THE COST OF THE WEDGE ANCHOR BOLTS WILL NOT BE MEASURED AND PAID FOR BUT WILL BE INCIDENTAL TO THE PERTINENT LIGHTING ITEMS IN THE CONTRACT.
4. CONDUITS MOUNTED TO BRIDGE STRUCTURE SHALL BE 1" DIAMETER GALVANIZED RIGID STEEL CONDUIT, UNLESS OTHERWISE NOTED.
5. ALL CONDUITS MOUNTED TO STRUCTURES SHALL BE SUPPORTED BY 2 HOLE STAINLESS STEEL CONDUIT STRAPS OR CLAMPS SPACED AT A MAXIMUM DISTANCE OF 36 INCHES BETWEEN SUPPORTS AND WITHIN 12 INCHES OF EACH JUNCTION BOX, CONDULET, LUMINAIRE OR OTHER TERMINATION. ALL CONDUIT STRAPS, CLAMPS, WEDGE ANCHORS AND CONDULETS WILL NOT BE MEASURED AND PAID FOR BUT WILL BE INCIDENTAL TO THE PERTINENT LIGHTING ITEMS IN THE CONTRACT.

NOTES (CONTINUED):

6. THE CONTRACTOR SHALL SUBMIT SHOP DRAWINGS OF ALL PROPOSED UNDERPASS LIGHTING SYSTEM COMPONENTS INCLUDING CONDUIT, CONDUIT STRAPS AND CLAMPS, JUNCTION BOXES, BENDS, CONDULETS, EXPANSION COUPLINGS AND UNDERPASS LUMINAIRES TO THE ENGINEER FOR APPROVAL. SHOP DRAWING PREPARATION SHALL BE INCIDENTAL TO THE PERTINENT ITEMS IN THE CONTRACT.
7. UNDERPASS LUMINAIRES SHALL BE INSTALLED HORIZONTALLY AND VERTICALLY CENTERED ON EXISTING PIER CAPS, UNLESS OTHERWISE NOTED.
8. IN LOCATIONS WHERE THE UNDERPASS LUMINAIRE EQUIPMENT (LUMINAIRES, CONDUIT AND JUNCTION BOXES) IS TO BE INSTALLED ON EXISTING PIERS WHICH REQUIRE REPAIR, THE PIER REPAIR SHALL TAKE PLACE PRIOR TO THE UNDERPASS EQUIPMENT INSTALLATION. REFER TO THE STRUCTURAL PLANS FOR PIER REPAIR DETAILS.

DETAIL A – UNDERPASS LUMINAIRE AND CONDUIT DETAIL

SCALE: NONE

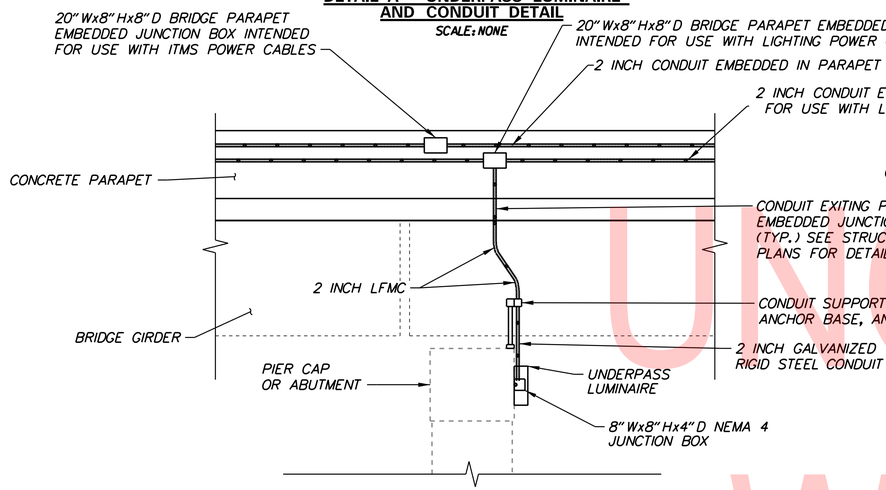

END VIEW

SCALE: NONE

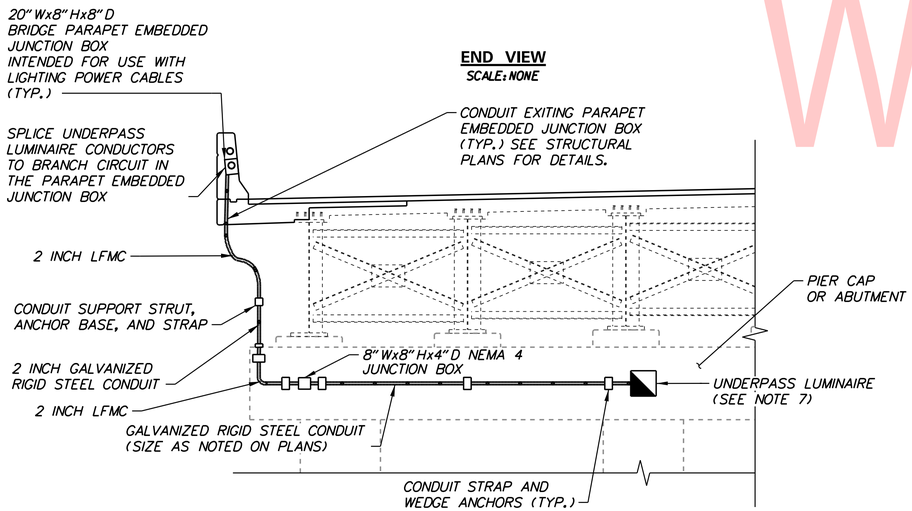

ELEVATION VIEW

SCALE: NONE

UNDERPASS LIGHTING NOTES:

1. JUNCTION BOXES ARE PROVIDED TO TRANSITION THE CONDUIT SIZE WHERE 2 INCH CONDUIT LEAVES THE PARAPET EMBEDDED SYSTEM TO FEED UNDERPASS LUMINAIRES.

DETAIL B – UNDERPASS LUMINAIRE AND IN-GROUND CONDUIT TRANSITION DETAILS

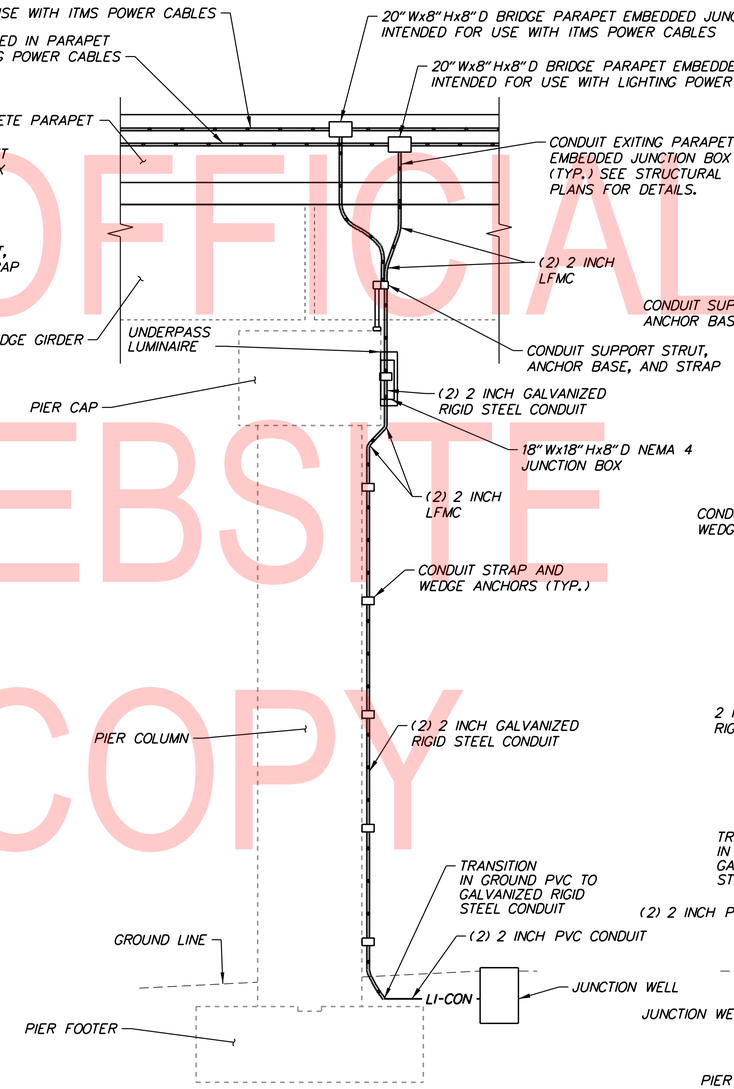

END VIEW

SCALE: NONE

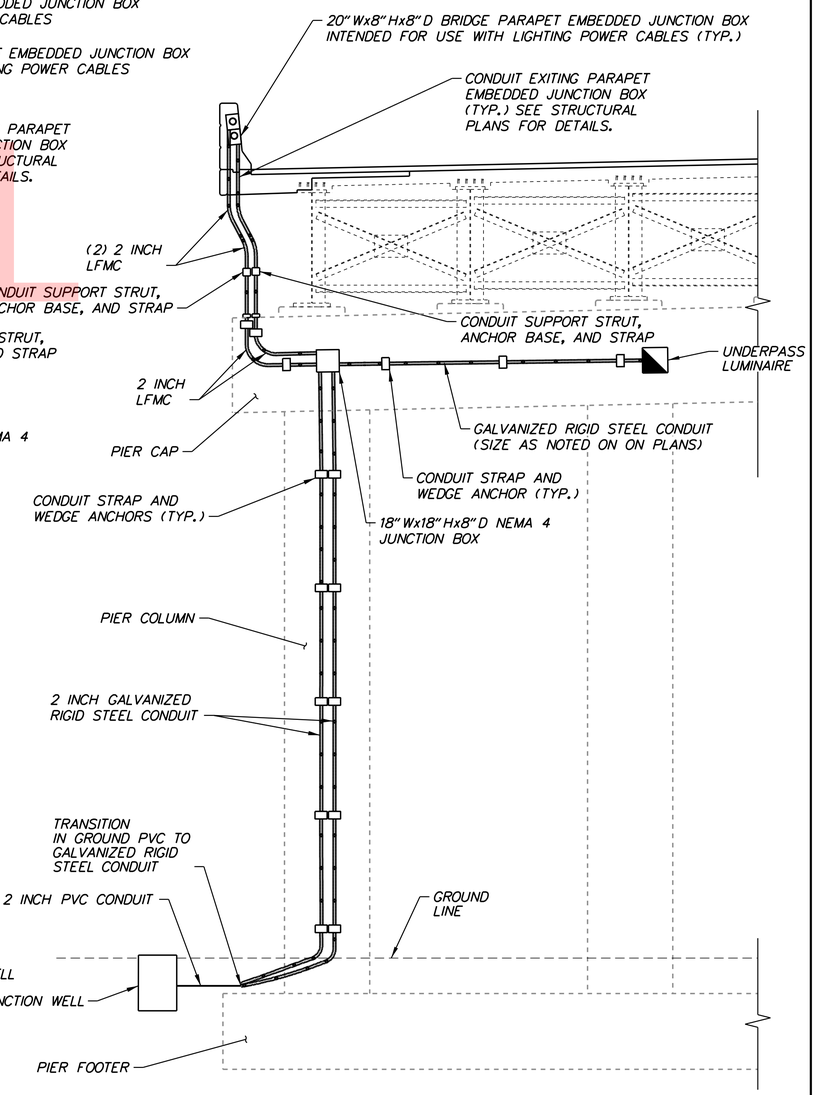

ELEVATION VIEW

SCALE: NONE

UNOFFICIAL WEBSITE COPY

N:\31987-094\Contract_Ramp_D\CADD\Traffic\LI103.dgn
8/5/2019 8:35:01 AM

ADDENDA / REVISIONS		NOT TO SCALE	REHABILITATION OF I-95, 2ND STREET ON-RAMP IMPROVEMENTS	CONTRACT T201907402	BRIDGE NO.	LIGHTING CONSTRUCTION DETAILS	LI-103
				COUNTY NEW CASTLE	DESIGNED BY: WRA		SECTION WRA
					CHECKED BY: WRA		SHEET NO. 248

NOTES:

1. THE CONTRACTOR SHALL INSTALL THE TEMPORARY LIGHTING WORK SHOWN ON THIS PLAN PRIOR TO REMOVING THE EXISTING PARAPET OR OTHERWISE IMPACTING THE EXISTING LIGHTING CIRCUITS IN THE PARAPET AS PROPOSED DURING PHASE 1.
2. THIS TEMPORARY LIGHTING WORK ENSURES THAT LIGHTING ALONG I-95 SOUTHBOUND IS MAINTAINED DURING PHASE 1. ROADWAY LIGHTING ALONG I-95 SOUTHBOUND WILL BE DISRUPTED AND NOT AVAILABLE DURING PHASE 2 DUE TO SIGNIFICANT IMPACTS TO THE LIGHTING SYSTEM CAUSED BY THE BRIDGE CONSTRUCTION. ROADWAY LIGHTING ALONG I-95 NORTHBOUND SHALL REMAIN AT ALL TIMES.
3. ALL TEMPORARY LIGHTING SHOWN ON THIS PLAN WILL BE MEASURED AND PAID FOR USING ITEM 831001 - FURNISH & INSTALL UP TO 3" FLEXIBLE METALLIC-LIQUID TIGHT CONDUIT, ITEM 831009 - FURNISH & INSTALL UP TO 4" GALVANIZED STEEL CONDUIT (ON STRUCTURE), ITEM 832007 - FURNISH & INSTALL 1-CONDUCTOR #4 AWG STRANDED COPPER TYPE USE-2, AND ITEM 832019 - FURNISH & INSTALL STRANDED INSULATED COPPER GROUND WIRE, 1/#6 AWG. ANY OTHER REQUIRED TEMPORARY WORK IDENTIFIED ON THIS PLAN SHALL BE CONSIDERED INCIDENTAL TO THESE ITEMS.
4. INSTALL CONDUIT THROUGH A TRAFFIC BEARING CONDUIT PROTECTOR RAMP BETWEEN THE EXISTING PARAPET AND PROPOSED TEMPORARY P.C.C. SAFETY BARRIER SO THAT WORK VEHICLES CAN CROSS CONDUIT AS NECESSARY. CONNECT CONDUIT WITH THE EXISTING PARAPET EMBEDDED JUNCTION BOX.TEMPORARILY SPLICE CONDUCTORS IN PROPOSED TEMPORARY CONDUIT WITH CONDUCTORS IN THE EXISTING JUNCTION BOX. ENSURE THAT EXISTING CONDUCTORS AND JUNCTION BOX ARE NOT DAMAGED FOR FUTURE USE.
5. INSTALL GALVANIZED RIGID CONDUIT ON THE BACK SIDE OF THE PROPOSED TEMPORARY P.C.C. SAFETY BARRIER. THE CONTRACTOR SHALL DETERMINE TEMPORARY CONDUIT INSTALLATION METHOD. NO PART OF CONDUIT OR THE CONDUIT SUPPORTS SHOULD BE INSTALLED ON THE TRAFFIC SIDE OF THE BARRIER.
6. INSTALL LIQUID TIGHT FLEXIBLE METALLIC CONDUIT FROM THE TEMPORARY BARRIER TO THE EXISTING PARAPET EMBEDDED JUNCTION BOX.
7. TEMPORARILY SPLICE CONDUCTORS IN PROPOSED TEMPORARY CONDUIT WITH CONDUCTORS IN THE EXISTING JUNCTION BOX. ENSURE THAT EXISTING CONDUCTORS AND JUNCTION BOX ARE NOT DAMAGED FOR FUTURE USE.
8. CONDUITS MOUNTED TO STRUCTURES SHALL BE SUPPORTED FOLLOWING THE CONDUIT INSTALLATION REQUIREMENTS SHOWN ON LI-103.
9. EXISITNG LIGHTING STANDARD TO BE REMOVED DURING PHASE 1.

LIGHTING SERVICE SCHEDULE

SERVICE RUN	# OF CONDUITS	SIZE	DISTANCE (L.F.)	DESCRIPTION	INSTALLATION
525	1	1.5"	10*	(3)#4, (1)#6 GROUND	WITHIN PROTECTOR
526	1	1.5"	500*	(3)#4, (1)#6 GROUND	MOUNTED ON TEMPORARY P.C.C. SAFETY BARRIER
527	1	1.5"	8*	(3)#4, (1)#6 GROUND	MOUNTED ON STRUCTURE

*GALVANIZED RIGID STEEL CONDUIT OR LFMC

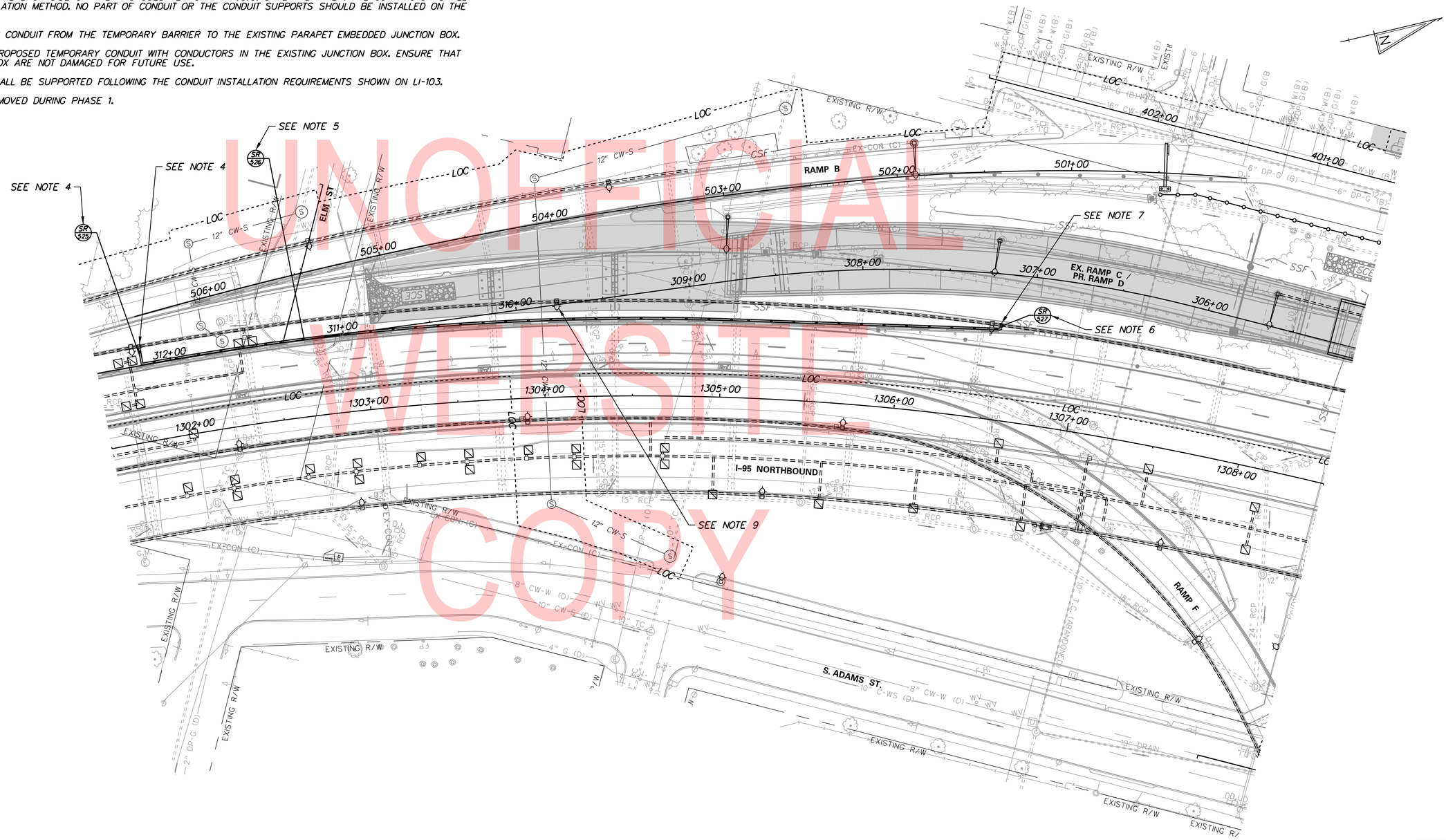

UNOFFICIAL WEBSITE COPY

ADDENDA / REVISIONS	

SCALE 0 30 60 90 FEET

REHABILITATION OF I-95, 2ND STREET ON-RAMP IMPROVEMENTS

CONTRACT	BRIDGE NO.	1-748S, 1-750
T201907402	DESIGNED BY: WRA	
COUNTY		
NEW CASTLE	CHECKED BY: WRA	

TEMPORARY LIGHTING PLAN

LI-104
SECTION
WRA
SHEET NO.
249

N:\31987-004\Contract_Ramp_D\CADD\Traffic\LI104.dgn
8/5/2019 8:53:03 AM

SIGNING STRIPING & CONDUIT PLANS – INDEX OF SHEETS

DWG №	PLAN DESCRIPTION
SS-00	SIGNING LEGEND, ITMS LEGEND, GENERAL NOTES, INDEX OF SHEETS
SS-01 - SS-05	SIGNING, STRIPING, AND CONDUIT PLANS
SS-101	GUIDE SIGN DIMENSIONS AND DETAILS
SS-201 - SS-202	SIGNING CONSTRUCTION DETAILS
SS-301 - SS-302	BARRIER MOUNTED SIGN SUPPORT DETAILS
SS-401	SIGNING SCHEDULE

SIGNING, STRIPING AND CONDUIT PLAN GENERAL NOTES:

1. *THE CONTRACTOR SHALL BE GOVERNED BY THE STANDARDS AND REQUIREMENTS OF THE FOLLOWING PUBLICATIONS, EXCEPT AS MODIFIED BY THE SPECIAL PROVISIONS OF THIS CONTRACT OR THROUGH WRITTEN APPROVAL BY THE ENGINEER.*

   DELAWARE - "MANUAL ON UNIFORM TRAFFIC CONTROL DEVICES" 2011 EDITION AND SUBSEQUENT REVISIONS (DEMUTCD)

   F.H.W.A. - "STANDARD HIGHWAY SIGNS". 2004 EDITION AND ALL SUPPLEMENTS

2. *THE CONTRACTOR SHALL INSTALL RAISED/RECESSED PAVEMENT MARKERS (RPMS) PER PART 3 OF THE DELAWARE MUTCD (SEE FIGURES 3B-15A, 3B-15B, 3B-15C, 3B-15E AND 3B-15F).*
3. *THE CONTRACTOR SHALL INSTALL POST MOUNTED, GUARDRAIL, OR BARRIER MOUNTED DELINEATORS ALONG THE LIMITS OF THE PROPOSED CONSTRUCTION AS PER PART 3 OF THE DELAWARE MUTCD, THE STANDARD SPECIFICATIONS, AND THE STANDARD CONSTRUCTION DETAILS.*
4. *ALL EXISTING SIGNS NOT SHOWN ON THE PLAN SHALL REMAIN.*
5. *ALL FOUNDATIONS FOR EXISTING SIGN STRUCTURE FOUNDATIONS DESIGNATED TO BE REMOVED SHALL BE REMOVED TO A DEPTH OF 1'-0" BELOW FINISHED GRADE.*
6. *SIGNS THAT DO NOT HAVE AN ASSOCIATED IDENTIFIER ARE SHOWN FOR REFERENCE PURPOSES ONLY AND SHALL REMAIN.*

SIGNING LEGEND

- *EXISTING CANTILEVER SIGN STRUCTURE*
- *EXISTING OVERHEAD SIGN STRUCTURE*
- *PROPOSED CANTILEVER SIGN STRUCTURE*
- *PROPOSED OVERHEAD SIGN STRUCTURE*
- *EXISTING GROUND MOUNTED SIGN*
- *PROPOSED GROUND MOUNTED SIGN*
- *SIGNALIZED INTERSECTION*

PROPOSED SIGN – *PROPOSED SIGN/PROPOSED SIGN MODIFICATION*

EXISTING SIGN – *EXISTING SIGN*

EXISTING SIGN – *EXISTING SIGN TO BE REMOVED*

ITMS LEGEND

–ITMS-CON–	– MULTIDUCT ITMS CONDUIT
	– MULTIDUCT ITMS CONDUIT (EMBEDDED)
–EX-ITMS–	– EXISTING ITMS CONDUIT
J.W.	– EXISTING & PROPOSED ITMS CONDUIT JUNCTION WELL
JW X	– EXISTING & PROPOSED JUNCTION WELL IDENTIFIER (TYPE OF JUNCTION WELL)
CO X	– EXISTING & PROPOSED CONDUIT RUN IDENTIFIER (# OF CONDUIT RUN)
	– EXISTING & PROPOSED CABINET
CA X	– EXISTING & PROPOSED CABINET IDENTIFIER (TYPE OF CABINET BASE)
	– EXISTING & PROPOSED POLE BASE
PB X	– EXISTING & PROPOSED POLE BASE IDENTIFIER (TYPE OF POLE BASE)
	– EXISTING & PROPOSED WAVETRONIX DETECTOR
P P	– EXISTING & PROPOSED METERED SERVICE PEDESTAL
D D	– EXISTING & PROPOSED DISCONNECT SWITCH
	– PROPOSED CCTV CAMERA

UNOFFICIAL WEBSITE COPY

N:\31987-004\Contract_Ramp_D\CADD\Traffic\SS000.dgn
8/5/2019 8:53:04 AM

ADDENDA / REVISIONS	

REHABILITATION OF I-95, 2ND STREET ON-RAMP IMPROVEMENTS

CONTRACT	BRIDGE NO.	
T201907402	DESIGNED BY: WRA	
COUNTY		
NEW CASTLE	CHECKED BY: WRA	

SIGNING, STRIPING & CONDUIT PLAN

SS-00
SECTION
WRA
SHEET NO.
250

NOTES:
1. PROPOSED PAVEMENT MARKINGS ARE SHOWN TO REPLACE EXISTING MARKINGS IMPACTED BY THE MAINTENANCE OF TRAFFIC. SEE CS SHEETS FOR DETAILS.

PAVEMENT MARKINGS LEGEND

SYMBOL	ITEM		QUANTITY
A	5" SOLID WHITE EPOXY RESIN PAINT (ITEM 817013)		0 LF
B	5" SOLID YELLOW EPOXY RESIN PAINT (ITEM 817013)		215 LF
C	10" SOLID WHITE EPOXY RESIN PAINT (ITEM 817014)		120 LF
D	5" BROKEN WHITE PERMANENT PAVEMENT STRIPING, EPOXY RESIN PAINT, 10' LINE, 30' GAP (ITEM 817013)		0 LF
E	5" DOTTED WHITE RETROREFLECTIVE PREFORMED PATTERNED MARKINGS (TAPE) 3' LINE, 9' GAP (ITEM 817020)		0 LF
F	8" BROKEN WHITE RETROREFLECTIVE PREFORMED PATTERNED CONTRAST PAVEMENT MARKINGS, 10' LINE & 30' GAP (ITEM 817022)		80 LF
G	8" SOLID WHITE CONTRAST EPOXY RESIN PAINT, 5" WHITE, 3" BLACK	ITEM 817013	335 LF
		ITEM 817018	335 LF

PAVEMENT MARKINGS LEGEND

SYMBOL	ITEM	QUANTITY
H	13" DOTTED WHITE RETROREFLECTIVE PREFORMED PATTERNED CONTRAST PAVEMENT MARKINGS, 3' LINE & 9' GAP (TAPE) (ITEM 817023)	0 LF
J	16" SOLID WHITE PERMANENT PAVEMENT STRIPING, ALKYD-THERMOPLASTIC (ITEM 817002)	0 SF
K	5" DOTTED WHITE PERMANENT PAVEMENT STRIPING, ALKYD-THERMOPLASTIC, 2' LINE, 6' GAP (ITEM 817005)	0 LF
L	SOLID WHITE ALKYD-THERMOPLASTIC PERMANENT PAVEMENT SYMBOL (ITEM 817002)	0 SF
M	5" DOTTED WHITE PERMANENT PAVEMENT STRIPING, EPOXY RESIN PAINT, 2' LINE, 6' GAP (ITEM 817013)	0 LF
N	PERMANENT PAVEMENT STRIPING, SYMBOL, ALYKD-THERMOPLASTIC, WHITE, 10'x2', (ITEM 817002)	0 SF
P	10" DOTTED WHITE PERMANENT PAVEMENT STRIPING, EPOXY RESIN PAINT, 2' LINE, 6' GAP (ITEM 817014)	0 LF

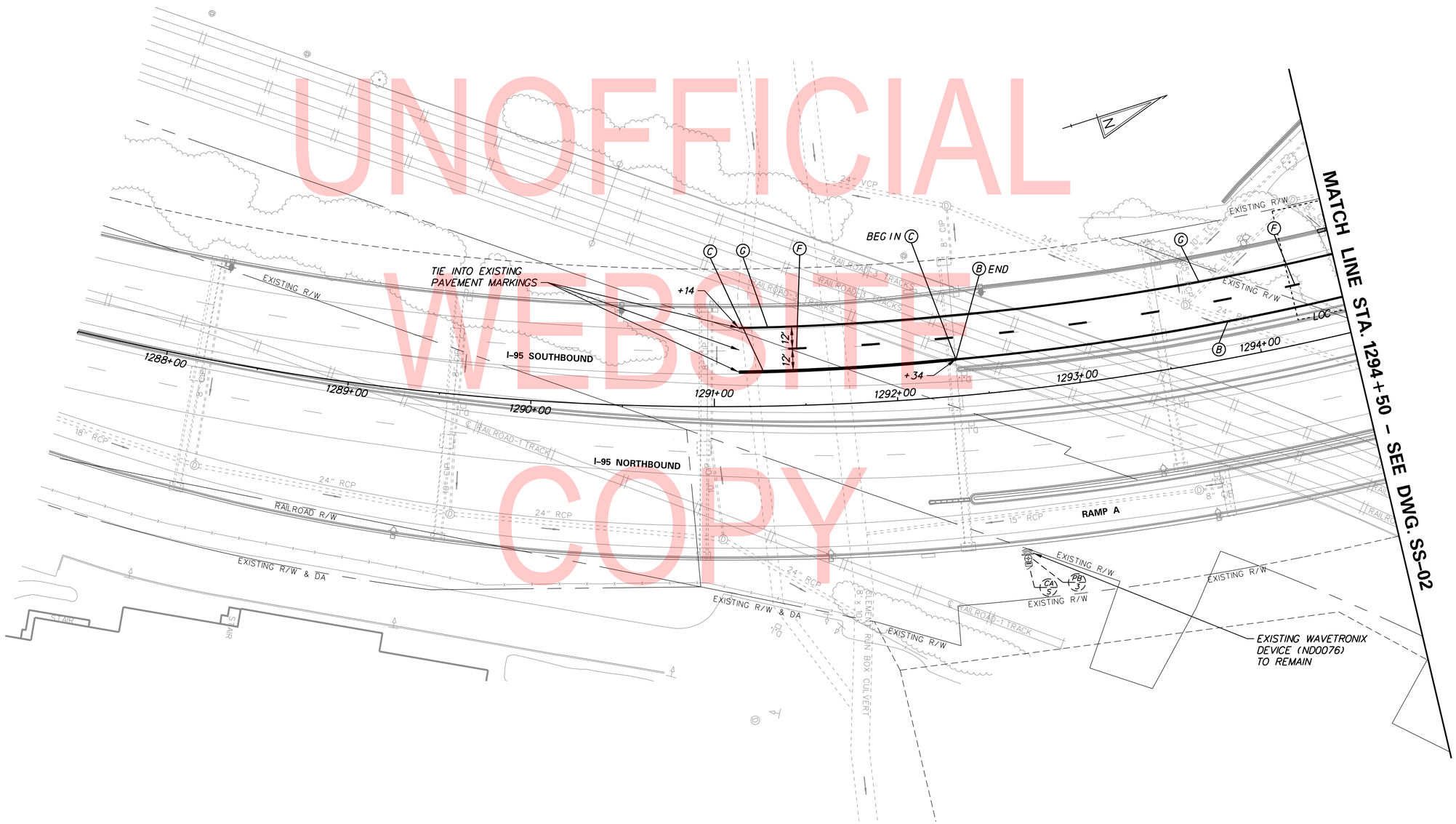

UNOFFICIAL WEBSITE COPY

ADDENDA / REVISIONS	

SCALE 0 30 60 90 FEET

REHABILITATION OF I-95, 2ND STREET ON-RAMP IMPROVEMENTS

CONTRACT	BRIDGE NO.	1-748S
T201907402	DESIGNED BY: WRA	
COUNTY		
NEW CASTLE	CHECKED BY: WRA	

SIGNING, STRIPING & CONDUIT PLAN

SS-01
SECTION
WRA
SHEET NO.
251

h:\31987-004\Contract_Ramp_D\CADD\Traffic\SS001.dgn
8/5/2019 8:53:07 AM

PAVEMENT MARKINGS LEGEND

SYMBOL	ITEM		QUANTITY
A	5" SOLID WHITE EPOXY RESIN PAINT (ITEM 817013)		0 LF
B	5" SOLID YELLOW EPOXY RESIN PAINT (ITEM 817013)		700 LF
C	10" SOLID WHITE EPOXY RESIN PAINT (ITEM 817014)		0 LF
D	5" BROKEN WHITE PERMANENT PAVEMENT STRIPING, EPOXY RESIN PAINT, 10' LINE, 30' GAP (ITEM 817013)		0 LF
E	5" DOTTED WHITE RETROREFLECTIVE PREFORMED PATTERNED MARKINGS (TAPE) 3' LINE, 9' GAP (ITEM 817020)		0 LF
F	8" BROKEN WHITE RETROREFLECTIVE PREFORMED PATTERNED CONTRAST PAVEMENT MARKINGS, 10' LINE & 30' GAP (ITEM 817022)		180 LF
G	8" SOLID WHITE CONTRAST EPOXY RESIN PAINT, 5" WHITE, 3" BLACK	ITEM 817013	700 LF
		ITEM 817018	700 LF

PAVEMENT MARKINGS LEGEND

SYMBOL	ITEM	QUANTITY
H	13" DOTTED WHITE RETROREFLECTIVE PREFORMED PATTERNED CONTRAST PAVEMENT MARKINGS, 3' LINE & 9' GAP (TAPE) (ITEM 817023)	100 LF
J	16" SOLID WHITE PERMANENT PAVEMENT STRIPING, ALKYD-THERMOPLASTIC (ITEM 817002)	0 SF
K	5" DOTTED WHITE PERMANENT PAVEMENT STRIPING, ALKYD-THERMOPLASTIC, 2' LINE, 6' GAP (ITEM 817005)	0 LF
L	SOLID WHITE ALKYD-THERMOPLASTIC PERMANENT PAVEMENT SYMBOL (ITEM 817002)	0 SF
M	5" DOTTED WHITE PERMANENT PAVEMENT STRIPING, EPOXY RESIN PAINT, 2' LINE, 6' GAP (ITEM 817013)	0 LF
N	PERMANENT PAVEMENT STRIPING, SYMBOL, ALYKD-THERMOPLASTIC, WHITE, 10'x2', (ITEM 817002)	0 SF
P	10" DOTTED WHITE PERMANENT PAVEMENT STRIPING, EPOXY RESIN PAINT, 2' LINE, 6' GAP (ITEM 817014)	0 LF

NOTES:

1. EXISTING PIER MOUNTED CCTV CAMERA AND ASSOCIATED EQUIPMENT TO REMAIN.
2. EXISTING PIER MOUNTED WIRELESS TRANSCEIVER AND ASSOCIATED EQUIPMENT TO REMAIN.
3. SIGN STRUCTURE AND SIGN PROPOSED BY OTHERS UNDER CONTRACT NO. T201907002.

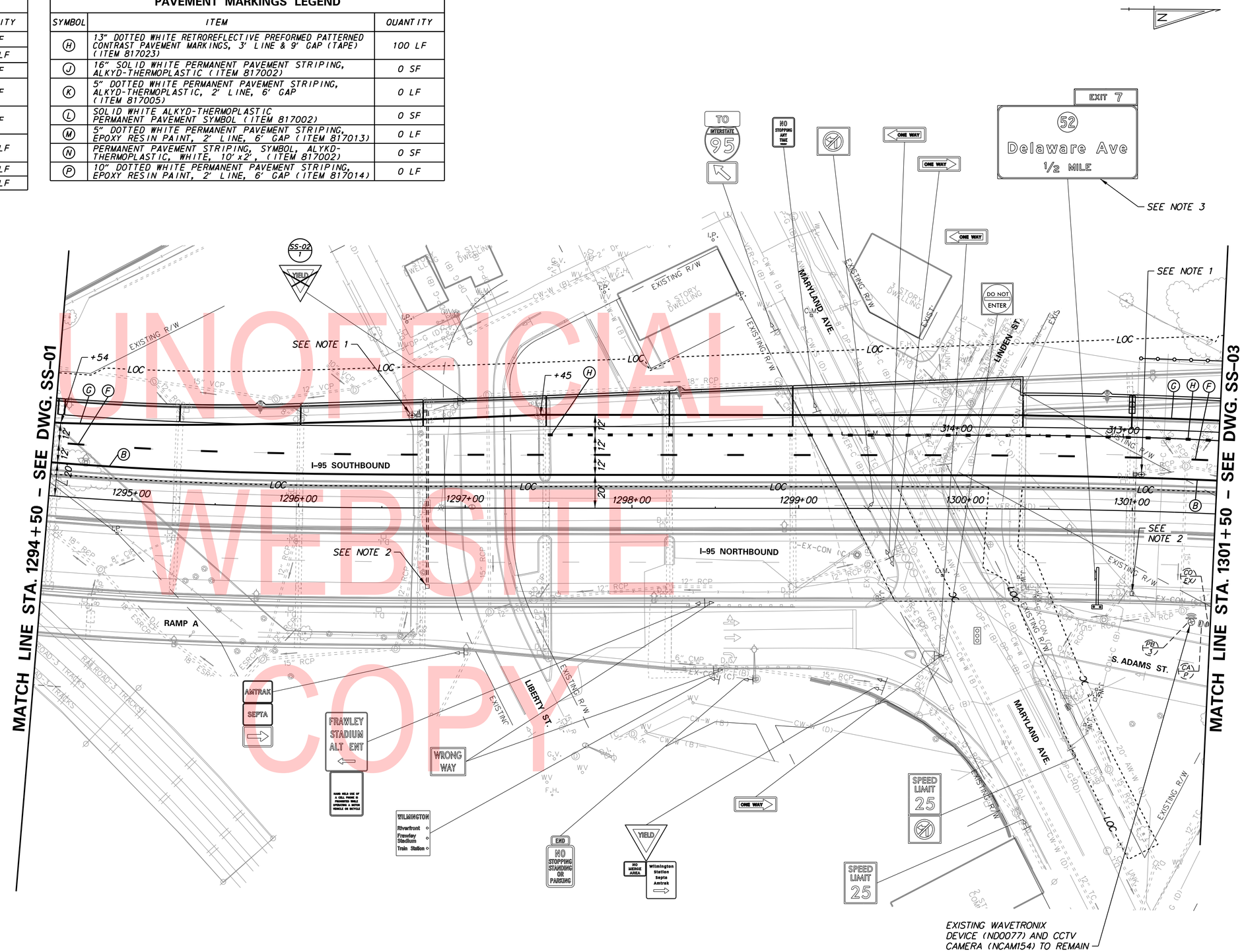

UNOFFICIAL WEBSITE COPY

N:\31987-004\Contract_Ramp_D\CADD\Traffic\SS002.dgn
8/5/2019 8:53:08 AM

ADDENDA / REVISIONS	

SCALE
0 30 60 90
FEET

REHABILITATION OF I-95, 2ND STREET ON-RAMP IMPROVEMENTS

CONTRACT	BRIDGE NO.	1-748S, 1-750
T201907402	DESIGNED BY: WRA	
COUNTY	CHECKED BY: WRA	
NEW CASTLE		

SIGNING, STRIPING & CONDUIT PLAN

SS-02
SECTION
WRA
SHEET NO.
252

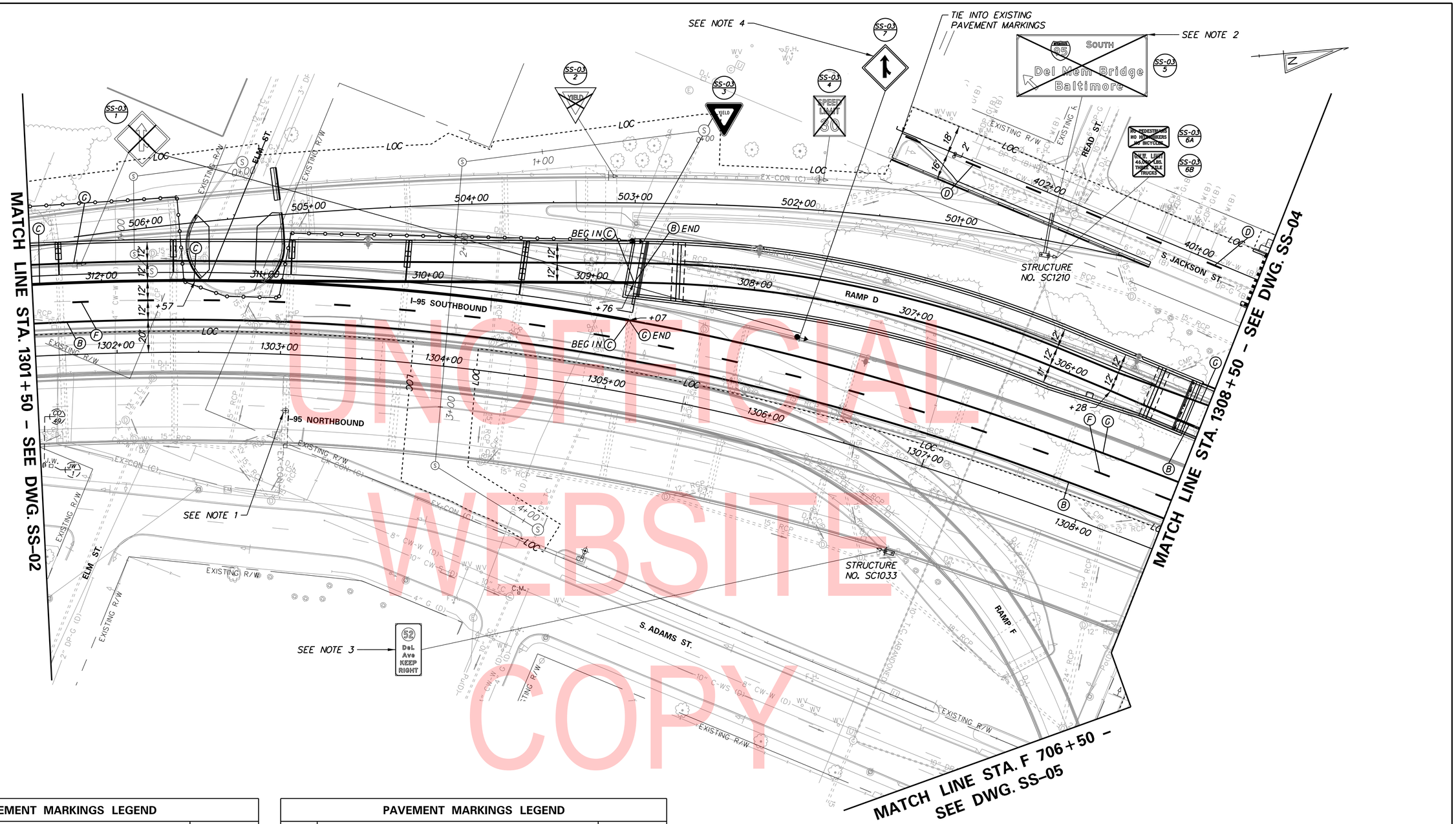

UNOFFICIAL WEBSITE COPY

PAVEMENT MARKINGS LEGEND

SYMBOL	ITEM		QUANTITY
A	5" SOLID WHITE EPOXY RESIN PAINT (ITEM 817013)		0 LF
B	5" SOLID YELLOW EPOXY RESIN PAINT (ITEM 817013)		1063 LF
C	10" SOLID WHITE EPOXY RESIN PAINT (ITEM 817014)		635 LF
D	5" BROKEN WHITE PERMANENT PAVEMENT STRIPING, EPOXY RESIN PAINT, 10' LINE, 30' GAP (ITEM 817013)		60 LF
E	5" DOTTED WHITE RETROREFLECTIVE PREFORMED PATTERNED MARKINGS (TAPE) 3' LINE, 9' GAP (ITEM 817020)		0 LF
F	8" BROKEN WHITE RETROREFLECTIVE PREFORMED PATTERNED CONTRAST PAVEMENT MARKINGS, 10' LINE & 30' GAP (ITEM 817022)		180 LF
G	8" SOLID WHITE CONTRAST EPOXY RESIN PAINT, 5" WHITE, 3" BLACK	ITEM 817013	980 LF
		ITEM 817018	980 LF

PAVEMENT MARKINGS LEGEND

SYMBOL	ITEM	QUANTITY
H	13" DOTTED WHITE RETROREFLECTIVE PREFORMED PATTERNED CONTRAST PAVEMENT MARKINGS, 3' LINE & 9' GAP (TAPE) (ITEM 817023)	0 LF
J	16" SOLID WHITE PERMANENT PAVEMENT STRIPING, ALKYD-THERMOPLASTIC (ITEM 817002)	0 SF
K	5" DOTTED WHITE PERMANENT PAVEMENT STRIPING, ALKYD-THERMOPLASTIC, 2' LINE, 6' GAP (ITEM 817005)	0 LF
L	SOLID WHITE ALKYD-THERMOPLASTIC PERMANENT PAVEMENT SYMBOL (ITEM 817002)	0 SF
M	5" DOTTED WHITE PERMANENT PAVEMENT STRIPING, EPOXY RESIN PAINT, 2' LINE, 6' GAP (ITEM 817013)	0 LF
N	PERMANENT PAVEMENT STRIPING, SYMBOL, ALKYD-THERMOPLASTIC, WHITE, 10'x2', (ITEM 817002)	0 SF
P	10" DOTTED WHITE PERMANENT PAVEMENT STRIPING, EPOXY RESIN PAINT, 2' LINE, 6' GAP (ITEM 817014)	0 LF

NOTES:

1. EXISTING PIER MOUNTED CCTV CAMERA AND ASSOCIATED EQUIPMENT TO REMAIN.
2. REMOVE EXISTING SIGN PANEL, SIGN SUPPORTS, CANTILEVER SIGN STRUCTURE AND FOUNDATION.
3. SIGN STRUCTURE AND SIGN TO BE REMOVED BY OTHERS UNDER CONTRACT NO. 201907002.
4. PROPOSED ANCHOR BOLTS FOR THE RELOCATED BARRIER MOUNTED SIGN SUPPORT SHALL MATCH OR EXCEED THE EXISTING ANCHOR BOLTS. THE COST OF THE ANCHOR BOLTS AND HARDWARE REQUIRED TO INSTALL THE RELOCATED BARRIER MOUNTED SIGN SUPPORT WILL NOT BE MEASURED AND PAID FOR BUT WILL BE INCIDENTAL TO ITEM 821003 - INSTALLATION OF BARRIER MOUNTED SIGN SUPPORT.

ADDENDA / REVISIONS

SCALE 0 30 60 90 FEET

REHABILITATION OF I-95, 2ND STREET ON-RAMP IMPROVEMENTS

CONTRACT	BRIDGE NO.	1-748S, 1-750
T201907402	DESIGNED BY: WRA	
COUNTY		
NEW CASTLE	CHECKED BY: WRA	

SIGNING, STRIPING & CONDUIT PLAN

SECTION: SS-03

SHEET NO. 253

N:\31987-00A\Contract_Ramp_D\CADD\Traffic\SS003.dgn
8/5/2019 8:53:09 AM

PAVEMENT MARKINGS LEGEND

SYMBOL	ITEM		QUANTITY
A	5" SOLID WHITE EPOXY RESIN PAINT (ITEM 817013)		430 LF
B	5" SOLID YELLOW EPOXY RESIN PAINT (ITEM 817013)		410 LF
C	10" SOLID WHITE EPOXY RESIN PAINT (ITEM 817014)		240 LF
D	5" BROKEN WHITE PERMANENT PAVEMENT STRIPING, EPOXY RESIN PAINT, 10' LINE, 30' GAP (ITEM 817013)		200 LF
E	5" DOTTED WHITE RETROREFLECTIVE PREFORMED PATTERNED MARKINGS (TAPE) 3' LINE, 9' GAP (ITEM 817020)		27 LF
F	8" BROKEN WHITE RETROREFLECTIVE PREFORMED PATTERNED CONTRAST PAVEMENT MARKINGS, 10' LINE & 30' GAP (ITEM 817022)		100 LF
G	8" SOLID WHITE CONTRAST EPOXY RESIN PAINT, 5" WHITE, 3" BLACK	ITEM 817013	550 LF
		ITEM 817018	550 LF
H	13" DOTTED WHITE RETROREFLECTIVE PREFORMED PATTERNED CONTRAST PAVEMENT MARKINGS, 3' LINE & 9' GAP (TAPE) (ITEM 817023)		0 LF
J	16" SOLID WHITE PERMANENT PAVEMENT STRIPING, ALKYD-THERMOPLASTIC (ITEM 817002)		135 SF
K	5" DOTTED WHITE PERMANENT PAVEMENT STRIPING, ALKYD-THERMOPLASTIC, 2' LINE, 6' GAP (ITEM 817005)		16 LF
L	SOLID WHITE ALKYD-THERMOPLASTIC PERMANENT PAVEMENT SYMBOL (ITEM 817002)		245 SF
M	5" DOTTED WHITE PERMANENT PAVEMENT STRIPING, EPOXY RESIN PAINT, 2' LINE, 6' GAP (ITEM 817013)		32 LF
N	PERMANENT PAVEMENT STRIPING, SYMBOL, ALYKD-THERMOPLASTIC, WHITE, 10'x2', (ITEM 817002)		660 SF
P	10" DOTTED WHITE PERMANENT PAVEMENT STRIPING, EPOXY RESIN PAINT, 2' LINE, 6' GAP (ITEM 817014)		20 LF

NOTES:

1. SIGN STRUCTURE, SIGN SUPPORTS AND SIGN PANELS PROPOSED BY OTHERS UNDER CONTRACT NO. T201907002.
2. REMOVE EXISTING SIGN PANEL AND OVERHEAD I-BEAMS ONLY. EXISTING SIGN SUPPORTS TO BE REMOVED BY OTHERS.
3. INSTALL PROPOSED SIGN PANEL C-10 ON THE SIGN STRUCTURE AND SIGN SUPPORTS PROPOSED BY OTHERS UNDER CONTRACT NO. T201907002.

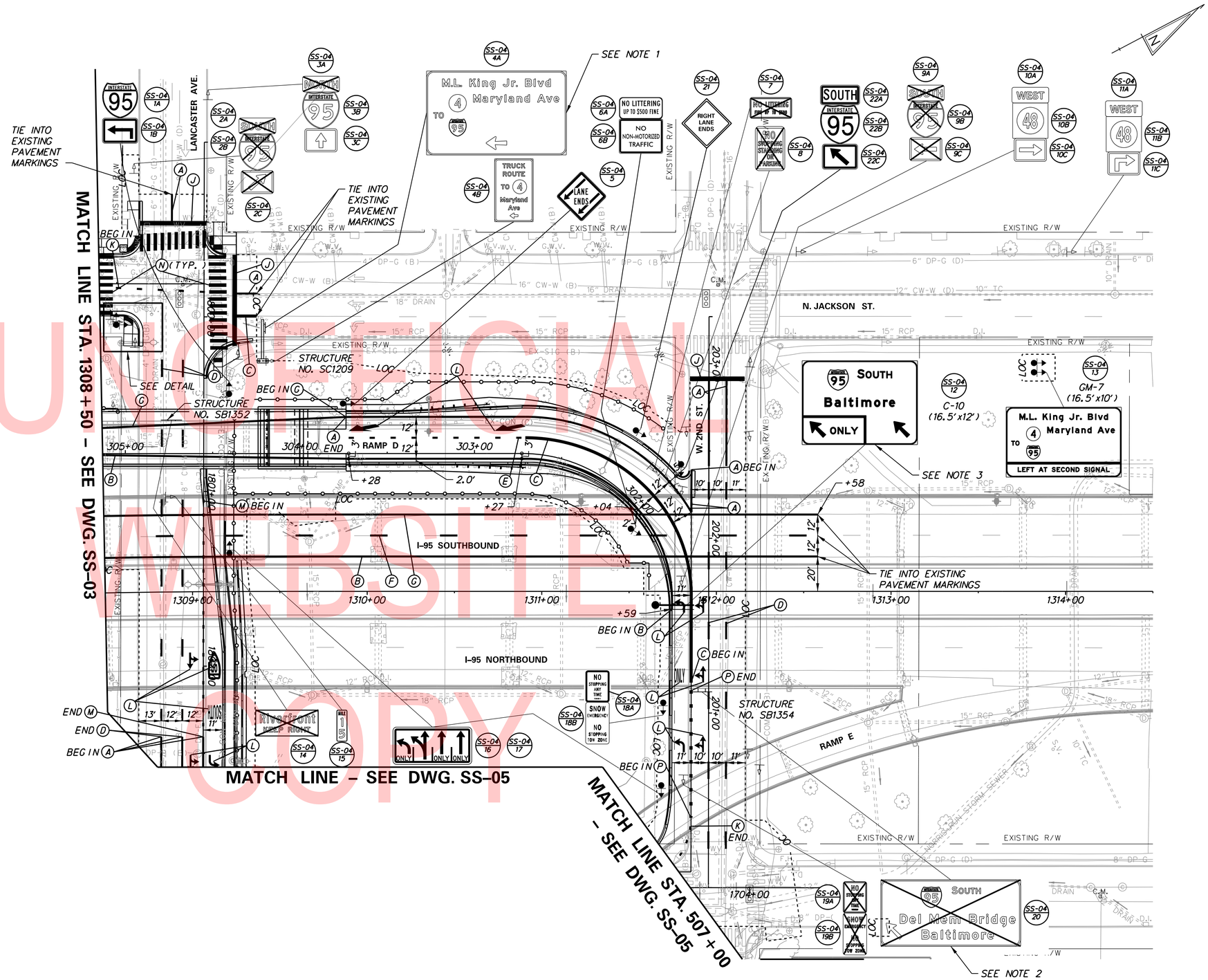

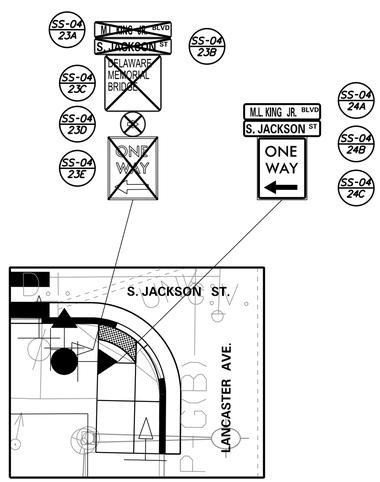

SIGN PLACEMENT DETAIL
SCALE: 1" =10'

UNOFFICIAL WEBSITE COPY

ADDENDA / REVISIONS	SCALE 0 30 60 90 FEET	REHABILITATION OF I-95, 2ND STREET ON-RAMP IMPROVEMENTS	CONTRACT T201907402	BRIDGE NO. 1-748S, 1-750	SIGNING, STRIPING & CONDUIT PLAN	SS-04 SECTION WRA
			COUNTY NEW CASTLE	DESIGNED BY: WRA		SHEET NO. 254
				CHECKED BY: WRA		

H:\31987-004\Contract_Ramp_D\CADD\Traffic\SS004.dgn
8/5/2019 8:53:11 AM

PAVEMENT MARKINGS LEGEND

SYMBOL	ITEM		QUANTITY
A	5" SOLID WHITE EPOXY RESIN PAINT (ITEM 817013)		195 LF
B	5" SOLID YELLOW EPOXY RESIN PAINT (ITEM 817013)		0 LF
C	10" SOLID WHITE EPOXY RESIN PAINT (ITEM 817014)		120 LF
D	5" BROKEN WHITE PERMANENT PAVEMENT STRIPING, EPOXY RESIN PAINT, 10' LINE, 30' GAP (ITEM 817013)		30 LF
E	5" DOTTED WHITE RETROREFLECTIVE PREFORMED PATTERNED MARKINGS (TAPE) 3' LINE, 9' GAP (ITEM 817020)		0 LF
F	8" BROKEN WHITE RETROREFLECTIVE PREFORMED PATTERNED CONTRAST PAVEMENT MARKINGS, 10' LINE & 30' GAP (ITEM 817022)		0 LF
G	8" SOLID WHITE CONTRAST EPOXY RESIN PAINT, 5" WHITE, 3" BLACK	ITEM 817013	0 LF
		ITEM 817018	0 LF

PAVEMENT MARKINGS LEGEND

SYMBOL	ITEM	QUANTITY
H	13" DOTTED WHITE RETROREFLECTIVE PREFORMED PATTERNED CONTRAST PAVEMENT MARKINGS, 3' LINE & 9' GAP (TAPE) (ITEM 817023)	0 LF
J	16" SOLID WHITE PERMANENT PAVEMENT STRIPING, ALKYD-THERMOPLASTIC (ITEM 817002)	110 SF
K	5" DOTTED WHITE PERMANENT PAVEMENT STRIPING, ALKYD-THERMOPLASTIC, 2' LINE, 6' GAP (ITEM 817005)	20 LF
L	SOLID WHITE ALKYD-THERMOPLASTIC PERMANENT PAVEMENT SYMBOL (ITEM 817002)	207 SF
M	5" DOTTED WHITE PERMANENT PAVEMENT STRIPING, EPOXY RESIN PAINT, 2' LINE, 6' GAP (ITEM 817013)	0 LF
N	PERMANENT PAVEMENT STRIPING, SYMBOL, ALYKD-THERMOPLASTIC, WHITE, 10'x2', (ITEM 817002)	440 SF
P	10" DOTTED WHITE PERMANENT PAVEMENT STRIPING, EPOXY RESIN PAINT, 2' LINE, 6' GAP (ITEM 817014)	20 LF

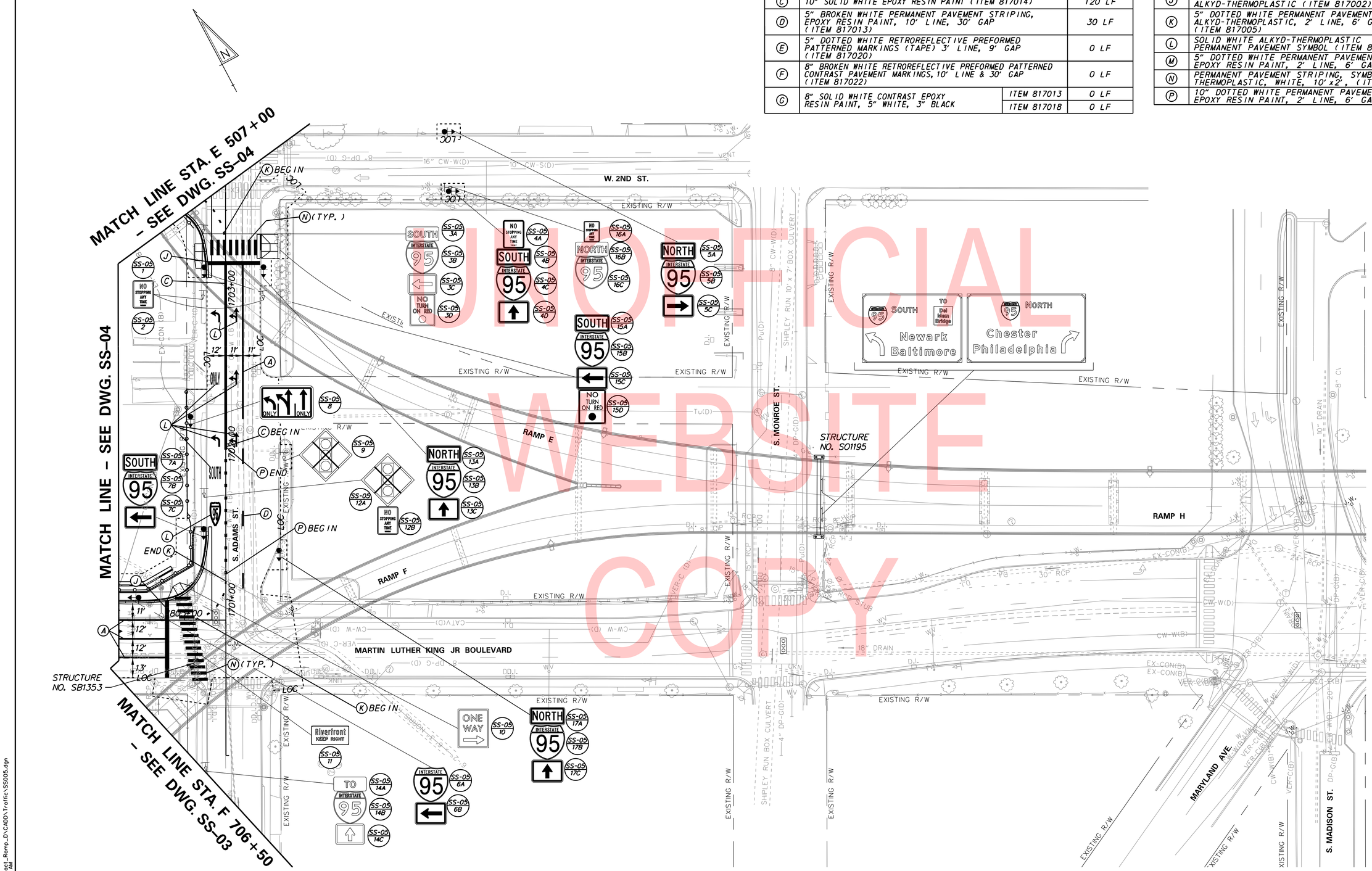

UNOFFICIAL WEBSITE COPY

N:\31987-004\Contract_Ramp_D\CADD\Traffic\SS005.dgn
8/5/2019 8:53:13 AM

ADDENDA / REVISIONS

SCALE 0 30 60 90 FEET

REHABILITATION OF I-95, 2ND STREET ON-RAMP IMPROVEMENTS

CONTRACT	BRIDGE NO. 1-748S
T201907402	DESIGNED BY: WRA
COUNTY	
NEW CASTLE	CHECKED BY: WRA

SIGNING, STRIPING & CONDUIT PLAN

SS-05
SECTION
WRA
SHEET NO.
255

PANEL DESIGNATION	DWG. NO.	QUANTITY	LEGEND	SIZE AREA (SF)	SIZE WIDTH	SIZE HEIGHT	COLOR LEGEND	COLOR BCKGRND	BORDER THICKNESS	BORDER RADIUS	ARROW	SHEILD	REMARKS
C-10	SS-04	1	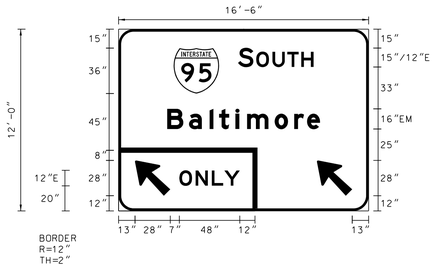	198	16'-6"	12'-0"	W	G	2"	12"	STD. UP ARROW @ 45°	MI-1 (36"x36")	EXTRUDED ALUMINUM
				-	9'-0"	4'-0"	BLK	FY	2"	12"	STD. UP ARROW @ 45°	-	EXTRUDED ALUMINUM
GM-7	SS-04	1	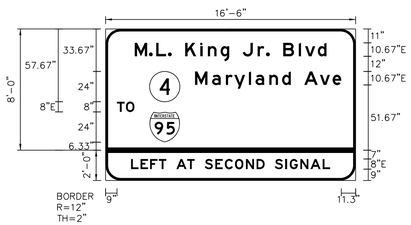	132	16'-6"	8'-0"	W	G	2"	12"	---	MI-5 (24"x24"), MI-1 (24"x24")	EXTRUDED ALUMINUM
				33	16'-6"	2'-0"	BLK	FY	2"	12"	---	-	EXTRUDED ALUMINUM

COLORS: BLK=BLACK, BLU=BLUE, BRO=BROWN, G=GREEN, R=RED, W=WHITE, Y=YELLOW, FY=FLUORESCENT YELLOW, FYG=FLUORESCENT YELLOW GREEN, PUR=PURPLE.

UNOFFICIAL WEBSITE COPY

N:\39827-004\Contract_Ramp_D\CADD\Traffic\SS101.dgn
8/5/2019 8:53:15 AM

ADDENDA / REVISIONS	

NOT TO SCALE

REHABILITATION OF I-95, 2ND STREET ON-RAMP IMPROVEMENTS

CONTRACT	BRIDGE NO.
T201907402	DESIGNED BY: WRA
COUNTY	
NEW CASTLE	CHECKED BY: WRA

GUIDE SIGN DIMENSIONS & DETAILS

SS-101

SECTION	SHEET NO.
WRA	256

BREAKAWAY I-BEAM SIGN POSTS CHART

SIGN NO.	SIGN SIZE (WXH)	SHEET NO.	POST SIZE	SUPPORT L-1	SUPPORT L-2	SUPPORT L-3	LATERAL CLEARANCE		SUPPPORT SPACING FROM LEFT EDGE OF SIGN
							OFFSET	OBJECT***	
GM-7	16.5' x 10'	SS-04	W8x21	19.0'	21.0'	-	10.0	FOC	3.3'-9.9'-3.3'

NOTES:

1. WHEN SPACING BETWEEN STEEL BEAM SUPPORTS IS GREATER THAN 8'-0" INSTALL DOUBLE ALUMINUM ANGLES (2½"x3½"x¼") FROM TOP TO BOTTOM OF SIGN WITH POST CLIPS INSTALLED AT EACH EXTRUDED ALUMINUM PANEL. COST TO FURNISH AND INSTALL ALUMINUM ANGLES SHALL BE INCIDENTAL TO THE INSTALL SIGN PANEL ON BREAKAWAY I-BEAM SIGN SUPPORT ITEM.
2. A MINIMUM 7'-0" FROM INSIDE OF FLANGE TO INSIDE OF FLANGE SHALL BE MAINTAINED BETWEEN ALL STEEL BEAM SIGN SUPPORTS LARGER THAN W6X9.
3. ALL STEEL BEAM SIGN SUPPORTS SHALL BE MOUNTED ON BREAKAWAY BASES REGARDLESS OF WHETHER PROTECTED BY TRAFFIC BARRIER OR UNPROTECTED. BREAKAWAY BASE SUPPORT SYSTEMS SHALL BE TRANSPO INDUSTRIES OR APPROVED EQUAL.
4. STEEL SUPPORTS DESIGNED FOR 90 MPH WIND SPEED AND 25 YEAR DESIGN LIFE USING ASTM A709, GRADE 36 STEEL BEAM SUPPORTS IN ACCORDANCE WITH AASHTO LTS-6 (2013) PER TRANSPO INDUSTRIES BREAK-SAFE SIGN POST SELECTION PROGRAM.

FOUNDATION SELECTION MATRIX

POST SIZE	FOUNDATION DIAMETER	ROADWAY CUT / FILL SLOPE										
		≥2:1	3:1	4:1	5:1	6:1	7:1	8:1	9:1	10:1	12:1	<13:1
W6x9	30"	*	C	C	C	C	B	B	B	A	A	A
W6x12 or TS 5"X5"X¼"	30"	*	C	C	C	C	B	B	B	A	A	A
W6x15, W6x16 or TS 6"X6"X 1/4 "	30"	*	C	C	C	C	B	B	B	A	A	A
W8x18	30"	*	C	C	C	C	B	B	B	A	A	A
W8x21 or TS 7"X7"X¼"	30"	*	C	C	C	C	B	B	B	A	A	A
W10x22 or TS 8"X8"X⅜"	36"	*	*	C	C	C	C	B	B	B	A	A
W10x26	36"	*	*	C	C	C	C	B	B	B	A	A
W12x26	36"	*	*	C	C	C	C	B	B	B	A	A
W14x30	36"	*	*	C	C	C	C	B	B	B	A	A
W16x31	36"	*	*	C	C	C	C	B	B	B	A	A
W18x35 or W18x40	36"	*	*	C	C	C	C	B	B	B	A	A
W21x44	42"	*	*	C	C	C	C	C	B	B	B	A

*IF A FOUNDATION EXCEEDS THE 4" AASHTO CRITERIA, THE CONTRACTOR SHALL CONTACT THE ENGINEER FOR APPROPRIATE GUIDANCE.

SIGN STAKEOUT DIMENSIONS

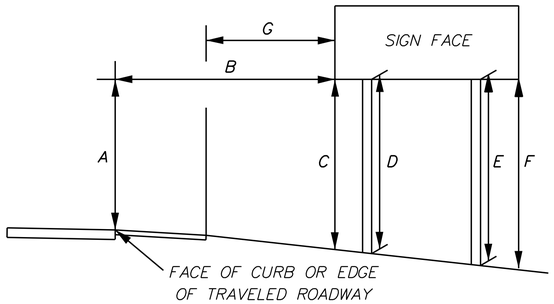

NOTE: CONTRACTOR SHALL COMPLETE SIGN STAKEOUT AND DETERMINE EXACT STEEL SIGN SUPPORT LENGTHS. STAKEOUT DIMENSIONS AND STEEL SIGN SUPPORT LENGTHS SHALL BE SUBMITTED TO ENGINEER FOR APPROVAL PRIOR TO FABRICATION OF STEEL SIGN SUPPORTS.

SIGN CLEARANCE

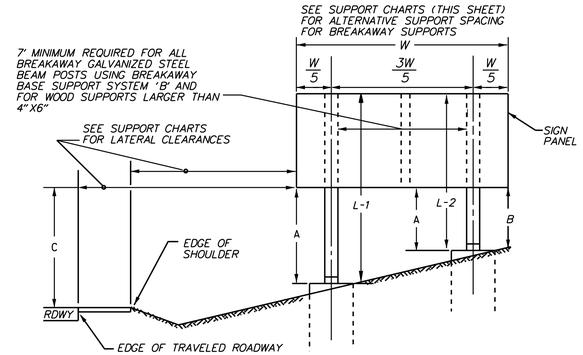

VERTICAL CLEARANCE OF SIGNS

A. 7'-6" MINIMUM FOR BREAKAWAY SUPPORTS OR 7'-0" FOR NON-BREAKAWAY SUPPORTS.
B. 2'-6" MINIMUM
C. 7'-6" MINIMUM & PREFERABLE. THIS DIMENSION IS TO BE INCREASED ONLY WHEN REQUIRED TO MEET A = 7'-6" FOR BREAKAWAY OR A (MIN.) = 7'-0" FOR NON-BREAKAWAY AND B (MIN) 2'-0"

ALL DIMENSIONS ARE TO BOTTOM OF SIGN

**TOTAL WEIGHT BELOW THE HINGES SHOULD BE LESS THAN 600 POUNDS

LATERAL CLEARANCE

SEE SUPPORT CHARTS

***OBJECT CODES

W = FACE OF W-BEAM TRAFFIC BARRIER
FOC = FACE OF CURB
ES = EDGE OF SHOULDER
ETR = EDGE OF TRAVELED ROADWAY
CM = CENTERED IN MEDIAN (LEFT OBJECT/ RIGHT OBJECT)
CG = CENTERED IN GORE (LEFT OBJECT/ RIGHT OBJECT)
B = FACE OF CONCRETE TRAFFIC BARRIER

STANDARD SIGN VERTICAL AND LATERAL CLEARANCE DETAIL

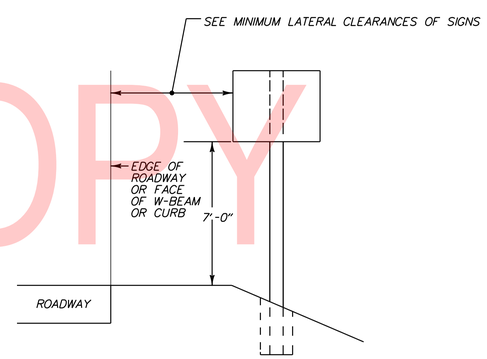

MINIMUM LATERAL CLEARANCE OF SIGNS:

1 = EDGE OF SIGN 6' FROM FACE OF W-BEAM TRAFFIC BARRIER
2 = EDGE OF SIGN 6' FROM EDGE OF SHOULDER
3 = EDGE OF SIGN 6' PREFERABLE MIN. (2' ABSOLUTE MIN.) FROM EACH EDGE OF SHOULDER IN MEDIAN OR CURB

NOTE: ALL SUPPORTS WITHIN THE CLEAR ZONE SHALL BE BREAKAWAY UNLESS PROTECTED BY TRAFFIC BARRIER, EXCEPT AS NOTED ABOVE FOR STEEL SUPPORTS.

REINFORCED CONCRETE MASONRY SIGN FOUNDATION DETAIL - TYPE A

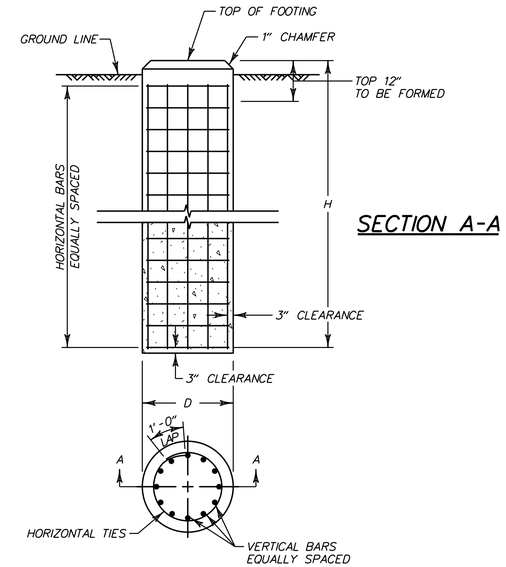

PLAN VIEW

FOUNDATION DATA TABLE

POST SIZE	D	H	VERTICAL REINFORCEMENT	HORIZONTAL REINFORCEMENT	CONCRETE REQUIRED (CY)
W6x9	30"	6'-0"	EIGHT (8)-NO. 7	SEVEN (7)-NO. 4	1.1
W6x12	30"	6'-0"	EIGHT (8)-NO. 7	SEVEN (7)-NO. 4	1.1
W6x15 OR W6x16	30"	6'-6"	EIGHT (8)-NO. 7	SEVEN (7)-NO. 4	1.2
W8x18	30"	7'-6"	EIGHT (8)-NO. 9	EIGHT (8)-NO. 4	1.4
W8x21	30"	8'-0"	EIGHT (8)-NO. 9	NINE (9)-NO. 4	1.5
W10x22	36"	8'-6"	EIGHT (8)-NO. 10	NINE (9)-NO. 4	2.3
W10x26	36"	9'-0"	EIGHT (8)-NO. 10	TEN (10)-NO. 4	2.4
W12x26	36"	10'-0"	EIGHT (8)-NO. 10	ELEVEN (11)-NO. 4	2.7
W14x30	36"	11'-0"	EIGHT (8)-NO. 10	TWELVE (12)-NO. 4	2.9
W16x31	36"	12'-0"	EIGHT (8)-NO. 10	THIRTEEN (13)-NO. 4	3.2
W18x35 OR W18x40	36"	13'-0"	EIGHT (8)-NO. 10	FOURTEEN (14)-NO. 4	3.5
W21x44	42"	12'-0"	TWELVE (12)-NO. 10	THIRTEEN (13)-NO. 4	4.3

STEEL POST BREAKAWAY SYSTEM SELECTION CHART

SYSTEM TYPE	ASSOCIATED POST SIZE
A16	W6X9
B525	W6X12, W6X15, W6x16, W8X18, W8X21
B650	ALL I-BEAMS LARGER THAN W8X21

UNOFFICIAL WEBSITE COPY

REINFORCED CONCRETE MASONRY SIGN FOUNDATION DETAIL - TYPE B

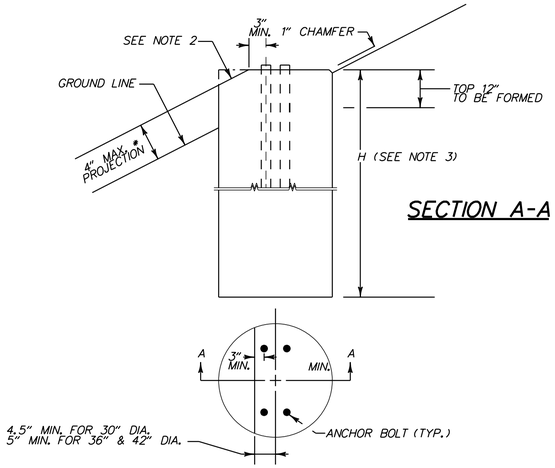

NOTES:

1. THIS FOUNDATION SHALL BE USED ONLY IN LOCATIONS MEETING SLOPE CRITERIA IN ACCORDANCE WITH THE STEEL BREAKAWAY SUPPORT FOUNDATION SELECTION MATRIX ON SIGNING CONSTRUCTION DETAILS SHEET.
2. SLOPED PORTIONS OF THE FOUNDATION SHALL MATCH THE FINISHED GROUND SLOPE.
3. REFER TO GALVANIZED STEEL BEAM TYPE A SIGN POST FOUNDATION DETAIL FOR FOUNDATION DIMENSIONS AND REINFORCING STEEL DETAILS.

REINFORCED CONCRETE MASONRY SIGN FOUNDATION DETAIL - TYPE C

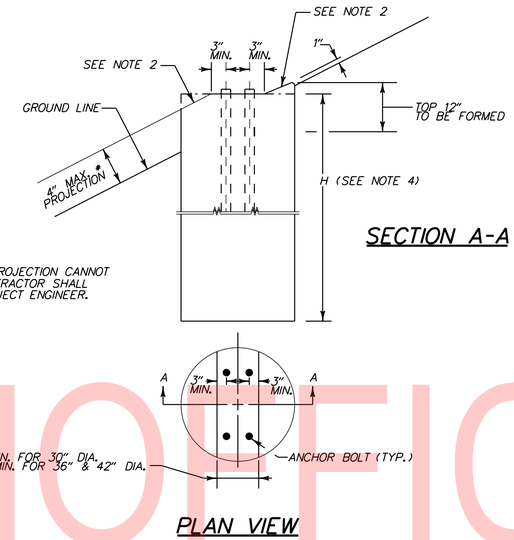

*IF 4" MAX. PROJECTION CANNOT BE MET, CONTRACTOR SHALL CONTACT PROJECT ENGINEER.

NOTES:

1. THIS FOUNDATION SHALL BE USED ONLY IN LOCATIONS MEETING SLOPE CRITERIA IN ACCORDANCE WITH THE STEEL BREAKAWAY SUPPORT FOUNDATION SELECTION MATRIX ON THE SIGNING CONSTRUCTION DETAILS SHEET.
2. SLOPED PORTIONS OF THE FOUNDATION SHALL MATCH THE FINISHED GROUND SLOPE.
3. ON FILL SLOPES GREATER THAN 6:1 BUT NO STEEPER THAN 3:1, FOUNDATIONS DESIRABLY SHOULD BE INSTALLED A MINIMUM OF 14 FT BEYOND THE HINGE POINT. THE HINGE POINT IS THE POINT OF SLOPE TRANSITION FROM THE SHOULDER SLOPE, OR A RELATIVELY FLAT RECOVERY AREA ADJACENT TO THE ROADWAY, TO A STEEPER FORESLOPE, (ALSO KNOWN AS THE FORESLOPE BREAK).
4. REFER TO GALVANIZED STEEL BEAM TYPE A SIGN POST FOUNDATION DETAIL FOR FOUNDATION DIMENSIONS AND REINFORCING STEEL DETAILS.

BREAKAWAY POLES ADJUSTMENT FOR GROUND SLOPES DETAIL

TO AVOID UNDERCARRIAGE SNAGGING ON CONVEX GROUND PROFILES, THE TOP OF THE FOOTING SHALL NOT PROJECT MORE THAN 4" ABOVE ANY 60" CHORD ALIGNED PERPENDICULARLY TO THE EDGE OF THE ROADWAY BETWEEN A POINT ON THE GROUND SURFACE ON ONE SIDE OF THE SUPPORT TO A POINT ON THE GROUND SURFACE ON THE OTHER SIDE OF THE SUPPORT.

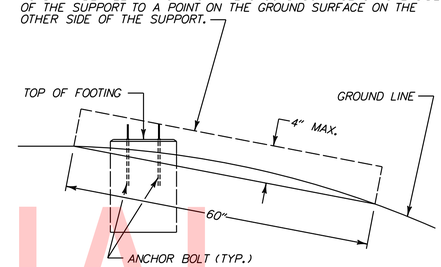

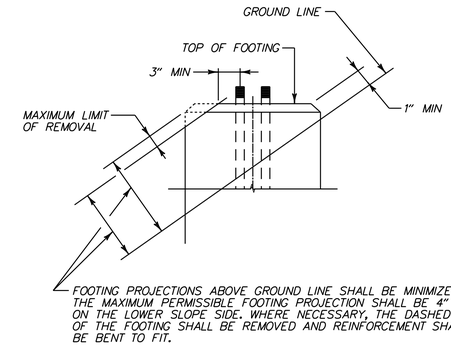

INSTALLATION OF EXIT PANEL TO EXTRUDED SIGN

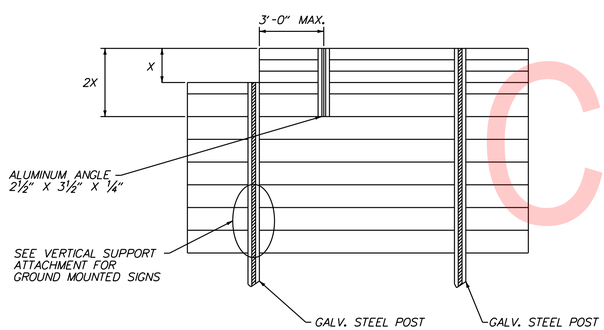

NOTES:

1. VERTICAL SUPPORTS ARE TO BE CONTINUOUS FOR ENTIRE HEIGHT OF SIGN, INCLUDING EXIT PANEL WHERE APPLICABLE.
2. ALL SUPPORTS (INCLUDING ANGLES) SHALL BE POST CLIPPED AT 12" INTERVALS.

VERTICAL SUPPORT ATTACHMENT FOR GROUND MOUNTED SIGNS

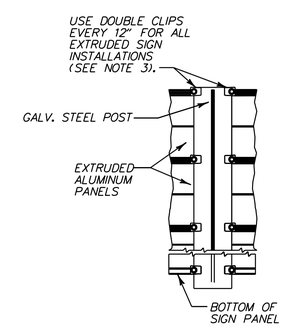

NOTES:

1. ALL STEEL SHALL BE HOT DIPPED GALVANIZED.
2. ALL STEEL SUPPORTS SHALL CONFORM TO A 709, GRADE 36.
3. POST CLIPS SHALL BE INSTALLED ON EACH SIDE OF SIGN SUPPORT SPACED EVERY 12" FOR ENTIRE HEIGHT OF SIGN, AS SHOWN. POST CLIPS SHALL MEET AASHTO STANDARD SPECIFICATIONS FOR STRUCTURAL SUPPORTS FOR HIGHWAY SIGNS, LUMINAIRES AND TRAFFIC SIGNALS.

UNOFFICIAL WEBSITE COPY

N:\31987-004\Contract_Ramp_D\CADD\Traffic\SS202.dgn
8/5/2019 8:53:17 AM

ADDENDA / REVISIONS	NOT TO SCALE	REHABILITATION OF I-95, 2ND STREET ON-RAMP IMPROVEMENTS	CONTRACT T201907402	BRIDGE NO.	SIGNING CONSTRUCTION DETAILS	SS-202
			COUNTY NEW CASTLE	DESIGNED BY: WRA		SECTION WRA
				CHECKED BY: WRA		SHEET NO. 258

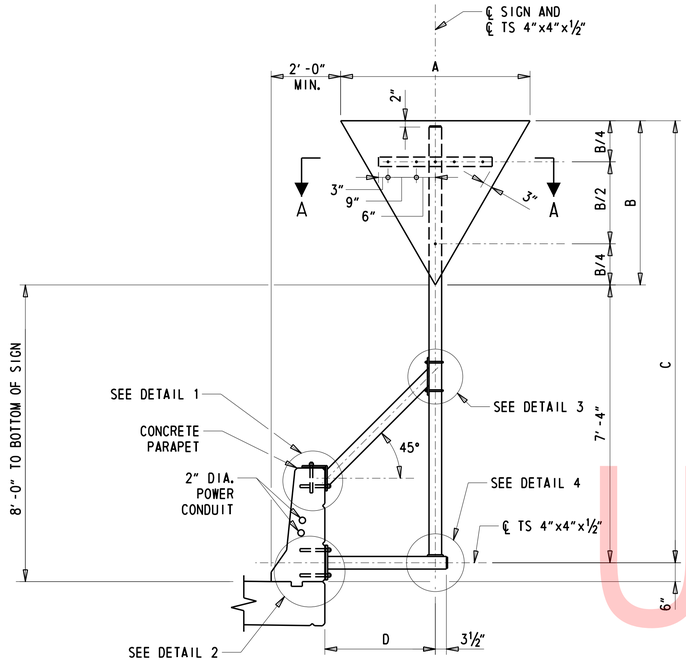

ELEVATION - SIGN SUPPORT TYPE I

½" = 1'-0"

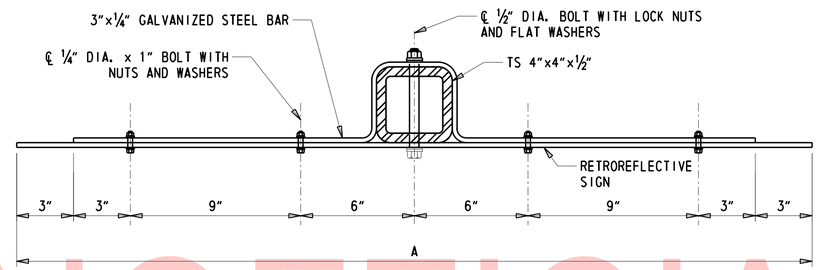

SECTION A-A TYPE I

3" = 1'-0"

BARRIER MOUNTED SIGN STRUCTURE GENERAL NOTES:

DESIGN SPECIFICATIONS

1. AASHTO "LRFD SPECIFICATIONS FOR STRUCTURAL SUPPORTS FOR HIGHWAY SIGNS, LUMINAIRES, AND TRAFFIC SIGNALS", 2015, 1ST EDITION, WITH 2017 INTERIM REVISIONS.
2. AASHTO "LRFD BRIDGE DESIGN SPECIFICATIONS", 2014, 7TH EDITION, WITH 2016 INTERIM REVISIONS.
3. DELAWARE DEPARTMENT OF TRANSPORTATION STANDARD SPECIFICATIONS FOR ROAD AND BRIDGE CONSTRUCTION, AUGUST 2016, INCLUDING ALL SUPPLEMENTALS AND THE CONTRACT SPECIAL PROVISIONS.
4. AWS D1.1 STRUCTURAL WELDING CODE.

DESIGN LOADS

1. THE DESIGN WIND SPEED IS 120 MPH (J-SECOND GUST WIND SPEED), BASED ON A 1700-YEAR MEAN RECURREENCE INTERVAL.
2. THE DESIGN SIGN PANEL WEIGHT IS 3 PSF.

MATERIALS

1. ALL STRUCTURAL TUBE SHALL CONFORM TO ASTM A1085.
2. ALL STEEL PLATES AND SHAPES SHALL CONFORM TO AASHTO M270, GRADE 36 OR BETTER.
3. ALL STEEL MEMBERS GREATER THAN OR EQUAL TO 1/2" THICK, SHALL MEET THE CHARPY V-NOTCH REQUIREMENTS FOR ZONE 2, NON-FRACTURE CRITICAL.
4. THE STRUCTURE SHALL BE GALVANIZED IN ACCORDANCE WITH AASHTO M111.
6. U-BOLTS, BOLTS, NUTS, AND WASHERS SHALL BE S.S. TYPE 316 AND SHALL CONFORM TO ASTM F593 AND F594.
7. WELDING MATERIAL SHALL CONFORM TO AWS D1.1. ELECTRODE MATERIAL SHALL BE E70XX.

GENERAL

1. LOCK NUTS WITH FLAT WASHERS SHALL ONLY BE USED FOR "U" BOLT CONNECTIONS AND SIGN PANEL TO VERTICAL POST CONNECTIONS.
2. FIELD VERIFY EXISTING DIMENSIONS BEFORE ORDERING ANY MATERIALS.
3. NO DRILLING SHALL BE PERFORMED BEFORE PARAPET CONCRETE REACHES ITS DESIGN STRENGTH. CARE SHALL BE TAKEN DURING DRILLING TO AVOID PARAPET REINFORCEMENT AND CONDUITS.

ANCHORS

1. ANCHORS SHALL BE ADHESIVE ANCHORING SYSTEM WITH STAINLESS STEEL TYPE 316 ANCHOR BOLTS, NUTS AND WASHERS. DIAMETER SHALL BE AS SHOWN IN DETAIL DRAWINGS ON SS-301 AND SS-302 AND MINIMUM EMBEDMENT SHALL BE PER THE MANUFACTURER TO MEET THE REQUIRED LOADS BELOW. ADHESIVE ANCHORS SHALL BE INSTALLED IN ACCORDANCE WITH THE MANUFACTURER'S RECOMMENDATIONS. THE CONTRACTOR SHALL HAVE A MANUFACTURER'S REPRESENTATIVE ON SITE DURING THE ADHESIVE ANCHOR INSTALLATION TO ENSURE PROPER PROCEDURES ARE FOLLOWED.
2. MINIMUM DESIGN STRENGTHS (LRFD DESIGN METHOD):
   ADHESIVE ANCHORING SYSTEM: TENSION = 7.00 KIP, SHEAR = 15.00 KIP
   ANCHOR BOLT: TENSION = 33.00 KIP, SHEAR = 18.50 KIP
   CONCRETE: fc' = 4,500 PSI

TYPE I SIGN SIZE AND SUPPORT DIMENSIONS TABLE

DRAWING	DESIGNATION	SHAPE	A	B	C	D
SS-03	3	TRIANGLE	60"	52"	140"	37"

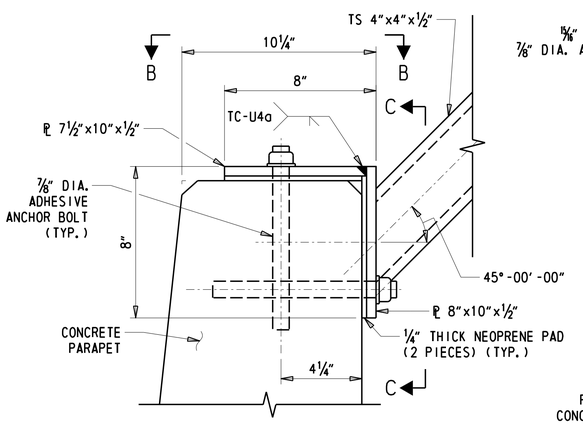

DETAIL 1 TYPE I

3" = 1'-0"

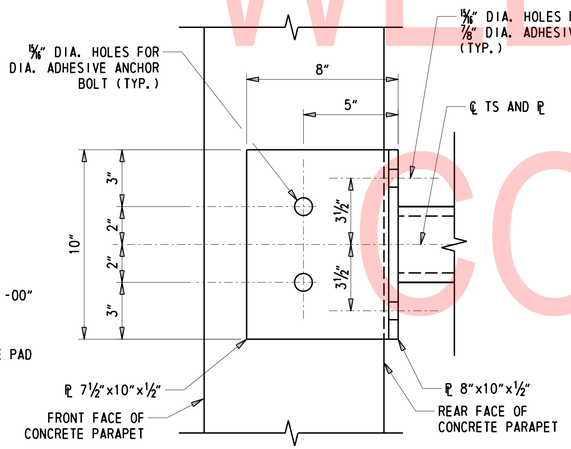

VIEW B-B TYPE I

3" = 1'-0"

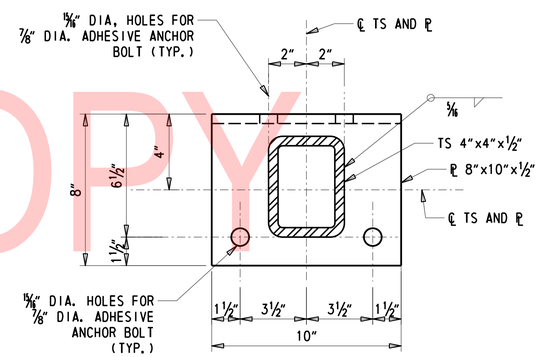

SECTION C-C TYPE I

3" = 1'-0"

NOTES:

1. FOR DETAILS 2, 3 AND 4 SEE DWG. SS-302.
2. FOR PARAPET DETAILS SEE DWG. PA-01.

UNOFFICIAL WEBSITE COPY

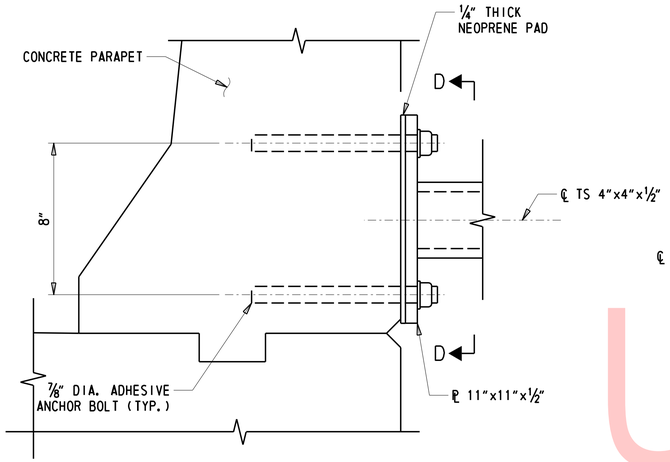

DETAIL 2 TYPE I

3" = 1'-0"

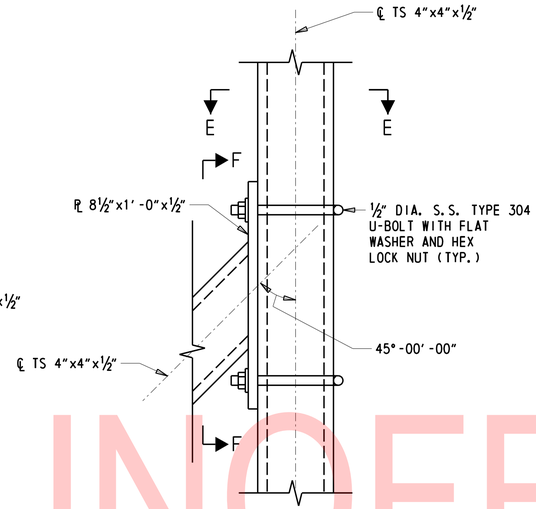

DETAIL 3 TYPE I

3" = 1'-0"

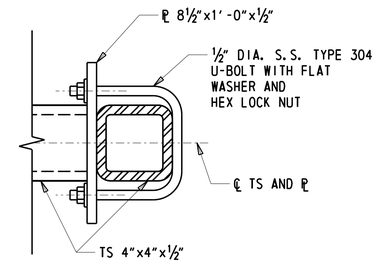

SECTION E-E TYPE I

3" = 1'-0"

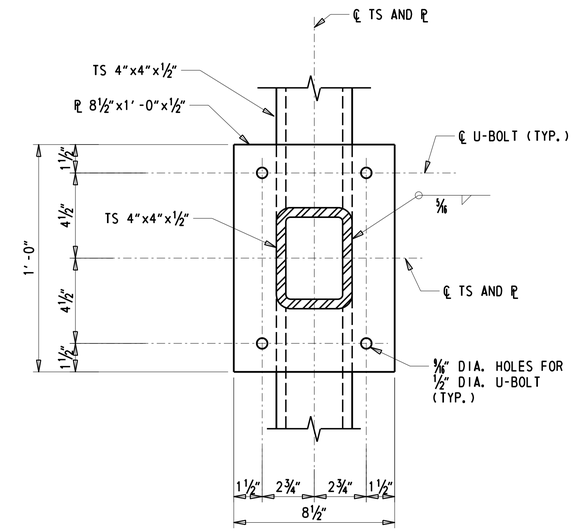

SECTION F-F TYPE I

3" = 1'-0"

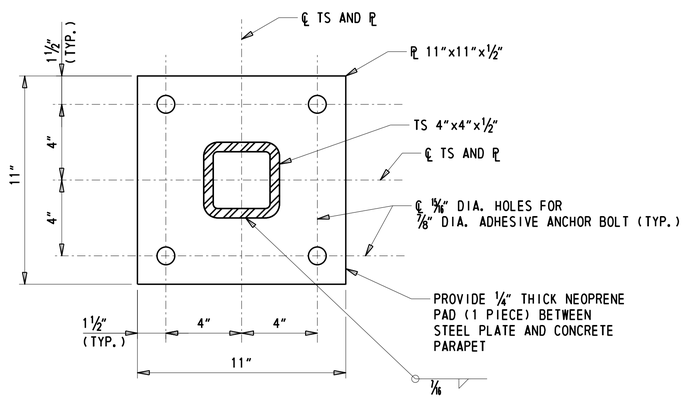

SECTION D-D TYPE I

3" = 1'-0"

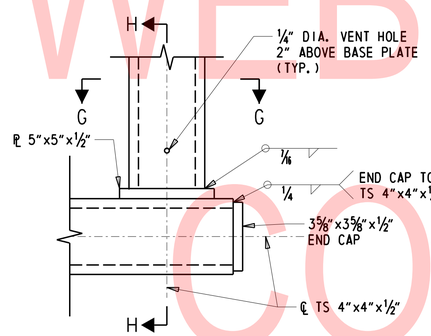

DETAIL 4 TYPE I

3" = 1'-0"

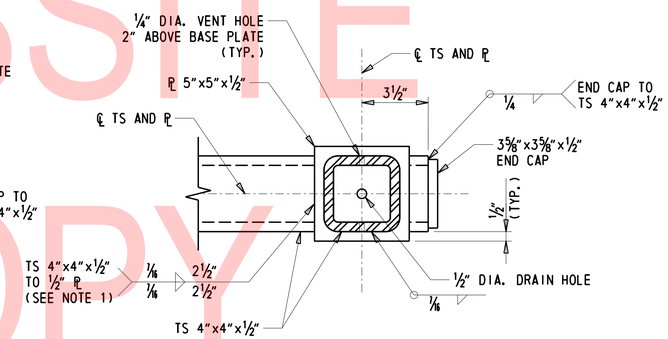

SECTION G-G TYPE I

3" = 1'-0"

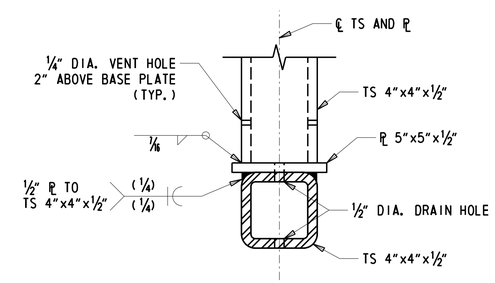

SECTION H-H TYPE I

3" = 1'-0"

NOTES:

1. 2½" LONG WELD TO BE CENTERED ON TS 4"x4"x½". AREAS OF 5"x5"x½" CONNECTION PLATE THAT OVERHANG THE ROUNDED EDGE OF THE TUBULAR SECTION NOT COVERED BY WELD MATERIAL SHALL BE SEALED WITH CAULK.

2. FOR BARRIER MOUNTED SIGN STRUCTURE GENERAL NOTES SEE DWG. SS-301.

UNOFFICIAL WEBSITE COPY

PERMANENT SIGN SCHEDULE

SHEET NO.	PLAN IDENTIFIER	SIGN DESIGNATION	QTY.	DESCRIPTION	SIGN WIDTH (IN)	SIGN HEIGHT (IN)	SIGN AREA (SF)	ITEM 819018 SINGLE POST (EACH)			ITEM 819019 INSTALLATION OR REMOVAL OF TRAFFIC SIGN(S) ON MULTIPLE SIGN POSTS (SF)			POST INSTALLATION TYPE	Code X11 12' Post (W/ Basepost) (EACH)	ITEM 819016 4" HOLE, 0-6" (EACH)	ITEM 819017 4" HOLE, >6" (EACH)	REMARKS
								SIGN DISPOSITION	REMOVE	INSTALL	SIGN DISPOSITION	REMOVE	INSTALL					
SS-02	1	R1-2(60)	1	YIELD	60	60		REMOVE										PARAPET MOUNTED
SS-03	1	W4-1_R(48)	1	MERGE (Right) - 48x48	48	48		REMOVE	1									REMOVE SIGN AND REPOSITION BARRIER MOUNTED SIGN SUPPORT
SS-03	2	R1-2(36)	1	YIELD	36	36		REMOVE	1									PARAPET MOUNTED
SS-03	3	R1-2(60)	1	YIELD	60	60	10.8	NEW										INSTALL ON TYPE 1 BARRIER MOUNTED SIGN SUPPORT
SS-03	4	R2-1-30(24)	1	SPEED LIMIT (30 MPH - 24x30)	24	30		REMOVE	1									
SS-03	5		1	I-95 SOUTH - Del Mem Bridge/Baltimore	240	114		REMOVE										SEE PLAN NOTES, ON OH STRUCTURE
SS-03	6A		1	"NO PEDESTRIANS/NO HITCHHIKERS/NO BICYCLES"	38	20		REMOVE										SEE PLAN NOTES, ON OH STRUCTURE
SS-03	6B		1	"G.V.W. LIMIT - 46,000 LBS/THREE AXLE TRUCKS"	30	24		REMOVE										SEE PLAN NOTES, ON OH STRUCTURE
SS-03	7	W4-1_R(48)	1	MERGE (Right) - 48x48	48	48	16.0											INSTALL SIGN ON REPOSITIONED BARRIER MOUNTED SIGN SUPPORT
SS-04	1A	M1-1(24)	1	INTERSTATE ROUTE (2 - Digit Sign) - 24x24	24	24	4.0	NEW		1				SOIL	1			I-95
SS-04	1B	M5-1_L	1	ADVANCE TURN ARROW (Left - 90)	21	15	2.2	NEW		1								
SS-04	2A	M3-3(24)	1	CARDINAL DIRECTION - SOUTH - 24x12	24	12		REMOVE	1									
SS-04	2B	M1-1(24)	1	INTERSTATE ROUTE (2 - Digit Sign) - 24x24	24	24		REMOVE	1									I-95
SS-04	2C	M6-7_R(21)	1	DIRECTIONAL ARROW AUXILIARY (Up - 45 Right) - 21x15	21	15		REMOVE	1									
SS-04	3A	M3-1(36)	1	CARDINAL DIRECTION - NORTH - 36x18	36	18		REMOVE	1									ON UT POLE
SS-04	3B	M1-1(36)	1	INTERSTATE ROUTE (2 - Digit Sign) - 36x36	36	36		REMAIN										I-95, ON UT POLE
SS-04	3C	M6-3(30)	1	DIRECTIONAL ARROW (Up) - 30x21	30	21		REMAIN										ON UT POLE
SS-04	4A		1	SR 4 - M.L. King Jr. Blvd (Left)	240	144		REMAIN										BY OTHERS
SS-04	4B		1	TRUCK ROUTE TO MARYLAND AVE	66	108		REMAIN										BY OTHERS
SS-04	5	W9-2-DE_L(48)	1	LANE ENDS (Left Arrows) - 48x48	48	48	16.0				NEW		16.0	SOIL	2			
SS-04	6A	SR 1-12-DE	1	NO LITTERING UP TO $500 FINE	24	12	2.0	NEW		1				SOIL	1			
SS-04	6B	R5-7(30)	1	NO NON-MOTORIZED TRAFFIC - 30x24	30	24	5.0	NEW		1								
SS-04	7	SR 1-12-DE	1	NO LITTERING UP TO $500 FINE	24	12		REMOVE	1									
SS-04	8	R7-4-DE(12)	1	NO STOPPING, STANDING, OR PARKING - 12x18	12	18		REMOVE	1									
SS-04	9A	M3-3(36)	1	CARDINAL DIRECTION - SOUTH - 36x18	36	18		REMOVE	1									
SS-04	9B	M1-1(36)	1	INTERSTATE ROUTE (2 - Digit Sign) - 36x36	36	36		REMOVE	1									I-95
SS-04	9C	M6-1_L(30)	1	DIRECTIONAL ARROW (Left) - 30x21	30	21		REMOVE	1									
SS-04	10A	M3-4(36)	1	CARDINAL DIRECTION - WEST - 36x18	36	18		REMAIN										
SS-04	10B	M1-5(36)	1	STATE ROUTE (2 - Digit Sign) - 36x36	36	36		REMAIN										SR 48
SS-04	10C	M6-1_R(30)	1	DIRECTIONAL ARROW (Right) - 30x21	30	21		REMAIN										
SS-04	11A	M3-4(36)	1	CARDINAL DIRECTION - WEST - 36x18	36	18		REMAIN										
SS-04	11B	M1-5(36)	1	STATE ROUTE (2 - Digit Sign) - 36x36	36	36		REMAIN										SR 48
SS-04	11C	M5-1_R	1	ADVANCE TURN ARROW (Right - 90)	21	15		REMAIN										
SS-04	12		1	I-95 SOUTH - Baltimore (Left)														C-10 (16.5'x12')
SS-04	13		1	SR 4 - M.L. King Jr. Blvd - LEFT AT SECOND SIGNAL														GM-7 (16.5'x10')
SS-04	14		1	Riverfront - NEXT RIGHT	144	60		REMOVE										ON OH STRUCTURE
SS-04	15	D10-2(12)	1	REFERENCE LOCATION (2- Digit) - 12x36	12	36		REMAIN										
SS-04	16		1	ADVANCE INTERSECTION LANE CONTROL (Left, Left - Ahead) - 64"x30"	64	30	13.3				NEW		13.3	SOIL	2			
SS-04	17		1	ADVANCE INTERSECTION LANE CONTROL (Left, Left - Ahead) - 64"x30"	64	30	13.3				NEW		13.3	SOIL	2			
SS-04	18A	R7-4-DE(18)	1	NO STOPPING, STANDING, OR PARKING - 18x24	18	24	3.0	NEW		1				SOIL	1			
SS-04	18B		1	"SNOW EMERGENCY - NO STOPPING - TOW ZONE"	12	24	2.0	NEW		1								
SS-04	19A	R7-4-DE(18)	1	NO STOPPING, STANDING, OR PARKING - 18x24	18	24		REMOVE	1									
SS-04	19B		1	"SNOW EMERGENCY - NO STOPPING - TOW ZONE"	12	24		REMOVE	1									
SS-04	20		1	I-95 SOUTH - Del Mem Bridge/Baltimore (Left)	240	114												SEE PLAN NOTES
SS-04	21	W9-1_R(48)	1	RIGHT LANE ENDS - 48x48	48	48	16.0				NEW		16.0	SOIL	2			
SS-04	22A	M3-3(24)	1	CARDINAL DIRECTION - SOUTH - 24x12	24	12	2.0	NEW		1								
SS-04	22B	M1-1(24)	1	INTERSTATE ROUTE (2 - Digit Sign) - 24x24	24	24	4.0	NEW		1				SOIL	1			I-95
SS-04	22C	M6-2_L(21)	1	DIRECTIONAL ARROW (Left - upward 45) - 21x15	21	15	2.2	NEW		1								
SS-04	23A	D3-1(8)	1	STREET NAME (1 Line)	48	8		REMOVE	1									ON UT POLE
SS-04	23B	D3-1(8)	1	STREET NAME (1 Line)	36	8		REMOVE	1									ON UT POLE
SS-04	23C		1	"DELAWARE MEMORIAL BRIDGE"	28.5	28.5		REMOVE	1									ON UT POLE
SS-04	23D		1	CIRCULAR WITH RIGHT ARROW	12	12		REMOVE	1									ON UT POLE
SS-04	23E	R6-2_L(18)	1	ONE WAY (LEFT ARROW) - 18x24	18	24		REMOVE	1									ON UT POLE
SS-04	24A	D3-1(8)	1	STREET NAME (1 Line)	48	8	2.7	NEW		1								
SS-04	24B	D3-1(8)	1	STREET NAME (1 Line)	36	8	2.0	NEW		1				EX. CONCRETE	1	1		
SS-04	24C	R6-2_L(18)	1	ONE WAY (LEFT ARROW) - 18x24	18	24	3.0	NEW		1								
SS-05	1	R7-4-DE(18)	1	NO STOPPING, STANDING, OR PARKING - 18x24	18	24		REMAIN										
SS-05	2	R7-4-DE(18)	1	NO STOPPING, STANDING, OR PARKING - 18x24	18	24		REMAIN										
SS-05	3A	M3-3(24)	1	CARDINAL DIRECTION - SOUTH - 24x12	24	12		REMOVE	1									
SS-05	3B	M1-1(24)	1	INTERSTATE ROUTE (2 - Digit Sign) - 24x24	24	24		REMOVE	1									I-95
SS-05	3C	M6-1_L(21)	1	DIRECTIONAL ARROW (Left) - 21x15	21	15		REMOVE	1									
SS-05	3D	R10-11(24)	1	NO TURN ON RED (Ball) - 24x30	24	30		REMOVE	1									
SS-05	4A	R7-4-DE(18)	1	NO STOPPING, STANDING, OR PARKING - 18x24	18	24	3.0	NEW		1								
SS-05	4B	M3-3(24)	1	CARDINAL DIRECTION - SOUTH - 24x12	24	12	2.0	NEW		1				EX. CONCRETE	1	1		
SS-05	4C	M1-1(24)	1	INTERSTATE ROUTE (2 - Digit Sign) - 24x24	24	24	4.0	NEW		1								I-95
SS-05	4D	M6-3(21)	1	DIRECTIONAL ARROW (Up) - 21x15	21	15	2.2	NEW		1								
SS-05	5A	M3-1(24)	1	CARDINAL DIRECTION - NORTH - 24x12	24	12	2.0	NEW		1								
SS-05	5B	M1-1(24)	1	INTERSTATE ROUTE (2 - Digit Sign) - 24x24	24	24	4.0	NEW		1				EX. CONCRETE	1	1		I-95
SS-05	5C	M6-1_L(21)	1	DIRECTIONAL ARROW (Left) - 21x15	21	15	2.2	NEW		1								
SS-05	6A	M1-1(24)	1	INTERSTATE ROUTE (2 - Digit Sign) - 24x24	24	24	4.0	NEW		1				NEW CONCRETE	1			I-95
SS-05	6B	M6-1_L(21)	1	DIRECTIONAL ARROW (Left) - 21x15	21	15	2.2	NEW		1								
SS-05	7A	M3-3(24)	1	CARDINAL DIRECTION - SOUTH - 24x12	24	12	2.0	NEW		1								
SS-05	7B	M1-1(24)	1	INTERSTATE ROUTE (2 - Digit Sign) - 24x24	24	24	4.0	NEW		1				NEW CONCRETE	1			I-95
SS-05	7C	M6-1_L(21)	1	DIRECTIONAL ARROW (Left) - 21x15	21	15	2.2	NEW		1								
SS-05	8	R3-8a (48)	1	ADVANCE INTERSECTION LANE CONTROL (Left, Left - Ahead, Right) - 48"x30"	48	30	10.0				NEW		10.0	SOIL	2			
SS-05	9	W3-3(48)	1	SIGNAL AHEAD (Symbol) - 48x48	48	48		REMOVE	1									ON EXISTING LUMINAIRE
SS-05	10	R6-2_R(18)	1	ONE WAY (RIGHT ARROW) - 18x24	18	24		REMAIN										
SS-05	11		1	Riverfron - KEEP RIGHT	72	36		REMAIN										ON OH STRUCTURE
SS-05	12A	W3-3(48)	1	SIGNAL AHEAD (Symbol) - 48x48	48	48		REMOVE	1									
SS-05	12B	R7-4-DE(18)	1	NO STOPPING, STANDING, OR PARKING - 18x24	18	24		REMAIN										
SS-05	13A	M3-1(24)	1	CARDINAL DIRECTION - NORTH - 24x12	24	12	2.0	NEW		1								
SS-05	13B	M1-1(24)	1	INTERSTATE ROUTE (2 - Digit Sign) - 24x24	24	24	4.0	NEW		1				EX. CONCRETE	1	1		I-95
SS-05	13C	M6-3(21)	1	DIRECTIONAL ARROW (Up) - 21x15	21	15	2.2	NEW		1								
SS-05	14A	M4-5(24)	1	TO - 24x12	24	12		REMAIN										
SS-05	14B	M1-1(24)	1	INTERSTATE ROUTE (2 - Digit Sign) - 24x24	24	24		REMAIN										I-95
SS-05	14C	M6-3(21)	1	DIRECTIONAL ARROW (Up) - 21x15	21	15		REMAIN										
SS-05	15A	M3-3(24)	1	CARDINAL DIRECTION - SOUTH - 24x12	24	12	2.0	NEW		1								
SS-05	15B	M1-1(24)	1	INTERSTATE ROUTE (2 - Digit Sign) - 24x24	24	24	4.0	NEW		1				SOIL	1			I-95
SS-05	15C	M6-1_L(21)	1	DIRECTIONAL ARROW (Left) - 21x15	21	15	2.2	NEW		1								
SS-05	15D	R10-11	1	NO TURN ON RED (Ball) - 24x30	24	30	5.0	NEW		1								
SS-05	16A	R7-4-DE(18)	1	NO STOPPING, STANDING, OR PARKING - 18x24	18	24		REMOVE	1									
SS-05	16B	M3-1(24)	1	CARDINAL DIRECTION - NORTH - 24x12	24	12		REMOVE	1									
SS-05	16C	M1-1(24)	1	INTERSTATE ROUTE (2 - Digit Sign) - 24x24	24	24		REMOVE	1									I-95
SS-05	17A	M3-1(24)	1	CARDINAL DIRECTION - NORTH - 24x12	24	12	2.0	NEW		1								
SS-05	17B	M1-1(24)	1	INTERSTATE ROUTE (2 - Digit Sign) - 24x24	24	24	4.0	NEW		1				EX. CONCRETE	1	1		I-95
SS-05	17C	M6-3(21)	1	DIRECTIONAL ARROW (Up) - 21x15	21	15	2.2	NEW		1								
SG-02	S-1	R3-2(36)	1	LEFT TURN PROHIBITION (Symbol) - 36x36	36	36	9.0	NEW										INSTALLATION BY TRAFFIC CONTRACTOR
SG-02	S-2	D3-1(18)	1	STREET NAME (1 Line)	72	18	9.0	NEW										N. Adams St, 8"/6" D-Series, INSTALLATION BY TRAFFIC CONTRACTOR
SG-02	S-3	R10-11(36)	1	NO TURN ON RED (Ball) - 36x48	36	48	12.0	NEW										INSTALLATION BY TRAFFIC CONTRACTOR
SG-02	S-4	R3-5_L	1	MANDATORY MOVEMENT LANE CONTROL (Left)	30	36	7.5	NEW										INSTALLATION BY TRAFFIC CONTRACTOR
SG-02	S-5	R3-6_L	1	OPTIONAL MOVEMENT LANE CONTROL (Ahead, Left)	30	36	7.5	NEW										INSTALLATION BY TRAFFIC CONTRACTOR
SG-02	S-6	D3-1(18)	1	STREET NAME (1 Line)	60	18	7.5	NEW										W. 2nd St, 8"/6" D-Series, INSTALLATION BY TRAFFIC CONTRACTOR
SG-02	S-7	R3-1(36)	1	RIGHT TURN PROHIBITION (Symbol) - 36x36	36	36	9.0	NEW										INSTALLATION BY TRAFFIC CONTRACTOR
				PAGE TOTALS			254		28	34		0	69		22	5	0	
				JOB TOTALS			254		28	34		0	69		22	5	0	

NOT OFFICIAL WEBSITE COPY

ADDENDA / REVISIONS

NOT TO SCALE

REHABILITATION OF I-95, 2ND STREET ON-RAMP IMPROVEMENTS

CONTRACT	BRIDGE NO.
T201907402	DESIGNED BY: WRA
COUNTY	
NEW CASTLE	CHECKED BY: WRA

SIGN SCHEDULE

SS-401

SECTION
WRA
SHEET NO.
261

N:\31987-004\Contract_Ramp_D\CADD\Traffic\SS401.dgn
8/5/2019 8:53:18 AM

CONDUIT RUN SCHEDULE

CO*	# OF CONDUITS	SIZE	LENGTH	B/T/O	AMOUNT AND TYPE OF CABLE/ WIRE
1*	1	2.5 IN	XX FT	-	EX. (1) 2/#8 U.F. W/GROUND, EX. (1) COMM. CABLE
2*	1	2.5 IN	8 FT	-	EX. (1) 2/#8 U.F. W/GROUND, EX. (1) COMM. CABLE
3*	3	2.5 IN	2 FT	-	EX. (1) 2/#8 U.F. W/GROUND, EX. (1) COMM. CABLE, EX. (2) 9/#14, <REMOVE EX. (1) 16/#14>, [NEW (5) 4/#14, (4) 5/#14, (3) #6 GROUND]
4*	1	2.0 IN	60 FT	-	EX. (2) 9/#14, [NEW (1) 4/#14]
5*	1	2.0 IN	120 FT	-	EX. (1) 9/#14
6*	1	2.0 IN	125 FT	-	EX. (1) 9/#14, [NEW (1) 4/#14]
7*	1	2.5 IN	6 FT	-	<REMOVE EX. (1) 16/#14>, [NEW (1) 4/#14, (1) #6 GROUND]
8*	1	2.5 IN	14 FT	-	<REMOVE EX. (1) 16/#14>
9*	1	2.5 IN	44 FT	-	<REMOVE EX. (1) 16/#14>
10*	1	2.5 IN	80 FT	-	<REMOVE EX. (1) 16/#14>
11*	1	2.5 IN	51 FT	-	<REMOVE EX. (1) 16/#14>
12	1	4.0 IN	70 FT	T/O	[NEW (1) 4/#14, (3) 5/#14, (1) #6 GROUND]
13	1	2.5 IN	17 FT	T/O	[NEW (1) 4/#14, (1) 5/#14, (1) #6 GROUND]
14	1	4.0 IN	53 FT	T/O	[NEW (2) 5/#14, (1) #6 GROUND]
15	1	2.5 IN	28 FT	O	[NEW (2) 5/#14, (1) #6 GROUND]
16	1	2.5 IN	13 FT	O	[NEW (1) 4/#14, (1) #6 GROUND]
17	1	4.0 IN	49 FT	O	[NEW (1) 4/#14, (1) 5/#14, (1) #6 GROUND]
18	1	2.5 IN	5 FT	O	[NEW (1) 4/#14, (1) 5/#14, (1) #6 GROUND]

* DENOTES EXISTING CONDUIT B = BORE, T = TRENCH, O = OPEN CUT

NOTES:

1. CO #1 IS NOT DRAWN TO SCALE, NOR IS THE DIRECTION NECESSARILY CORRECT.
2. ALL SIGNAL EQUIPMENT REMOVED FROM A PROJECT IS TO BE RETURNED TO THE CITY OF WILMINGTON. DELDOT'S TRAFFIC CONTRACTOR SHALL CONTACT MARK POWELL OF THE CITY OF WILMINGTON AT 302-576-3086 TO COORDINATE THE TRANSPORTATION AND STORAGE OF ALL SIGNAL EQUIPMENT REMOVED FROM THE PROJECT.
3. POLE BASES AND CONDUIT JUNCTION WELLS TO BE REMOVED IN ACCORDANCE WITH SECTION 211 OF THE STANDARD SPECIFICATIONS OR AS DIRECTED BY ENGINEER. EXISTING CONDUIT IS TO BE ABANDONED.
4. ALL UNDERGROUND AND OVERHEAD UTILITIES SHOWN ON THESE PLANS ARE SCHEMATIC ONLY AND MAY NOT BE COMPLETE. THE CONTRACTOR SHALL BE RESPONSIBLE FOR NOTIFYING MISS UTILITY, AND/OR THE APPROPRIATE UTILITY PRIOR TO THE BEGINNING OF CONSTRUCTION FOR THE UTILITY MARKOUTS. IF THE CONTRACTOR PERCEIVES THAT A CONFLICT BETWEEN UTILITIES AND THE TRAFFIC SIGNAL WILL OCCUR, THE CONTRACTOR SHALL NOTIFY DELDOT TRAFFIC IMMEDIATELY BEFORE CONSTRUCTION.
5. ALL CONDUITS SHALL BE SCHEDULE 80 PVC WHEN INSTALLED BY TRENCHING OR OPEN CUT AND HDPE SDR-13.5 WHEN INSTALLED BY BORING, UNLESS OTHERWISE NOTED.
6. DELDOT'S TRAFFIC CONTRACTOR SHALL INSTALL PROPOSED SIGNAL HEADS 6, 10, AND 11 USING A TOP OF POLE MOUNT.
7. DELDOT'S TRAFFIC CONTRACTOR SHALL INSTALL PROPOSED SIGNAL HEAD 1 WITH A RIGID STRUCTURE MOUNT ASSEMBLY. DELDOT'S TRAFFIC CONTRACTOR SHALL INSTALL A CONDULET ON THE EXISTING CONDUIT AND WIRE THE PROPOSED SIGNAL HEAD USING THE PROPOSED 4/#14 HEAD CABLE.
8. DELDOT'S TRAFFIC CONTRACTOR SHALL REMOVE EXISTING SIGNAL HEAD 2A AND INSTALL PROPOSED SIGNAL HEAD 2 IN ITS PLACE USING A RIGID STRUCTURE MOUNT ASSEMBLY.
9. JUNCTION WELLS WITHOUT CONDUIT SHOWN ARE NOT TO BE USED FOR THE INSTALLATION OF PROPOSED SIGNAL CABLES.
10. THE CONTRACTOR SHALL BE RESPONSIBLE FOR THE INSTALLATION AND REMOVAL OF ALL UNDERGROUND SIGNAL EQUIPMENT - E.G., JUNCTION WELLS, POLE BASES, AND CONDUIT. DELDOT'S TRAFFIC CONTRACTOR SHALL BE RESPONSIBLE FOR THE INSTALLATION AND REMOVAL OF ALL ELECTRICAL CABLES AND ABOVE GROUND SIGNAL EQUIPMENT - E.G., HEADS AND POLES.

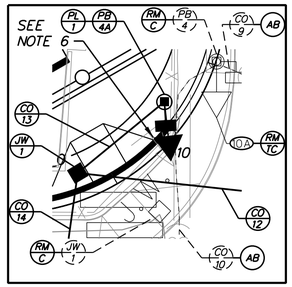

NW CORNER DETAIL
SCALE: 1" = 10'

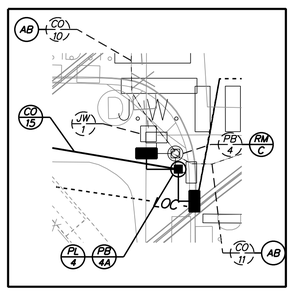

SW CORNER DETAIL
SCALE: 1" = 10'

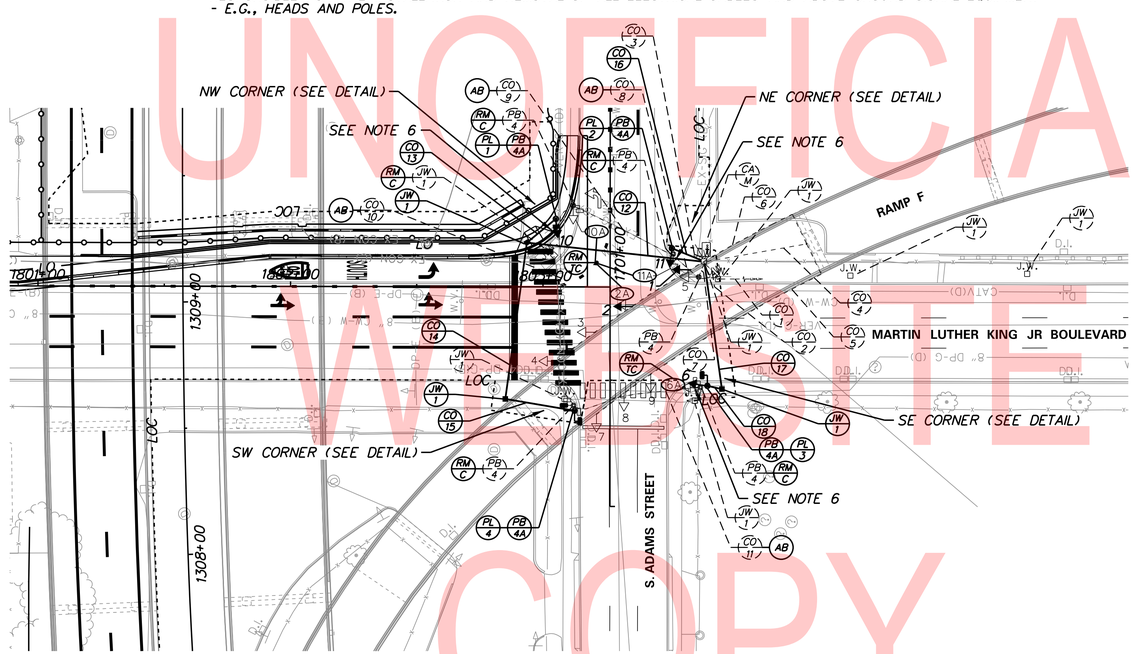

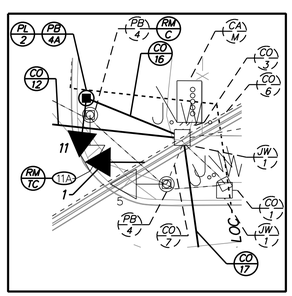

NE CORNER DETAIL
SCALE: 1" = 10'

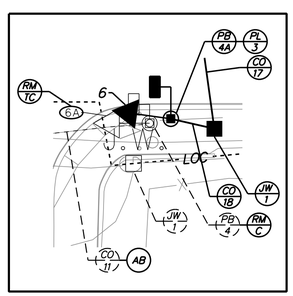

SE CORNER DETAIL
SCALE: 1" = 10'

PROPOSED POLE SCHEDULE

NO.	TYPE	STATION	OFFSET
1	PEDESTRIAN POLE W/ TYPE 4A BASE	1701+13.8	21.5' LT.
2	PEDESTRIAN POLE W/ TYPE 4A BASE	1701+2.2	24.5' RT.
3	PEDESTRIAN POLE W/ TYPE 4A BASE	1700+47.8	38.6' RT.
4	PEDESTRIAN POLE W/ TYPE 4A BASE	1700+37.9	14.1' LT.

SIGNAL PHASING

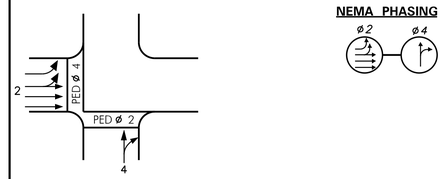

PHASING NOTES

1. PHASES ASSOCIATED BY A SOLID LINE WILL NOT OPERATE CONCURRENTLY.
2. PHASES ASSOCIATED BY A DASHED LINE WILL OPERATE CONCURRENTLY.

SIGNAL HEAD DIAGRAM

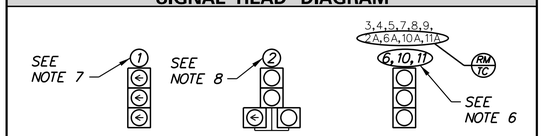

LEGEND

AB	ABANDON	OH	EXISTING OVERHEAD RUN IDENTIFIER (* OF OVERHEAD RUN)
CA X	EXISTING CABINET IDENTIFIER (TYPE OF CABINET)	OH *	PROPOSED OVERHEAD RUN IDENTIFIER (* OF OVERHEAD RUN)
CA X	PROPOSED CABINET IDENTIFIER (TYPE OF CABINET)	PB X	EXISTING POLE BASE IDENTIFIER (TYPE OF POLE BASE)
CO *	EXISTING CONDUIT RUN IDENTIFIER (* OF CONDUIT RUN)	PB X	PROPOSED POLE BASE IDENTIFIER (TYPE OF POLE BASE)
CO *	PROPOSED CONDUIT RUN IDENTIFIER (* OF CONDUIT RUN)	PL X	EXISTING POLE IDENTIFIER (* OF POLE)
JW X	EXISTING JUNCTION WELL IDENTIFIER (TYPE OF JUNCTION WELL)	PL X	PROPOSED POLE IDENTIFIER (* OF POLE)
JW X	PROPOSED JUNCTION WELL IDENTIFIER (TYPE OF JUNCTION WELL)	RM C	REMOVE BY CONTRACTOR
MA XX	EXISTING MAST ARM IDENTIFIER (LENGTH OF ARM)	RM O	REMOVE BY OTHERS
MA XX	PROPOSED MAST ARM IDENTIFIER (LENGTH OF ARM)	RM TC	REMOVE BY TRAFFIC CONTRACTOR

	EXISTING SYMBOL	PROPOSED SYMBOL
JUNCTION WELL	J.W.	■
LOOP DETECTOR, TYPE 1		▭
LOOP DETECTOR, TYPE 2		▭
LUMINAIRE		
MAST ARM		
MICROWAVE DETECTION		
OPTICOM RECEIVER		
OVERHEAD SIGNING		
PEDESTRIAN POLE/BASE		
PEDESTRIAN PUSHBUTTON		
PEDESTRIAN SIGNAL HEAD		
RIGHT-OF-WAY		R/W
SERVICE PEDESTAL	P	P
SIGNAL CABINET		
SIGNAL HEAD		
SIGNAL POLE/BASE		
CCTV CAMERA		
SPAN WIRE	XX	
UTILITY POLE		
VIDEO DETECTION		

PREPARED BY

WRA Whitman, Requardt and Associates, LLP
Engineers • Architects • Environmental Planners Est. 1915

THIS SEAL APPLIES TO ALL SHEETS BEARING THE "WRA" SECTION DESIGNATION. DATE SEAL

CONCURRENCE FOR INSTALLATION

CHIEF TRAFFIC ENGINEER DATE

SG-01

ADDENDA / REVISIONS

SCALE 0 30 60 90 FEET

REHABILITATION OF I-95, 2ND STREET ON-RAMP IMPROVEMENTS

CONTRACT T201907402	PERMIT NO.	WILM
COUNTY NEW CASTLE	DESIGNED BY: D.W.C.	
	CHECKED BY: M.J.B.	

SIGNAL PLAN MARTIN LUTHER KING BOULEVARD @ ADAMS STREET

SECTION WRA
SHEET NO. 262

N:\31987-00A\Contract_Ramp_D\CADD\Traffic\SG01_MLK @ Adams.dgn
8/5/2019 8:53:23 AM

UNOFFICIAL WEBSITE COPY

CONDUIT RUN SCHEDULE

CO*	# OF CONDUITS	SIZE	LENGTH	B/T/O	AMOUNT AND TYPE OF CABLE/ WIRE
1*	1	2.5 IN	XX FT	-	EX. (1) 2/*8 U.F. W/GROUND
2*	1	2.5 IN	12 FT	-	EX. (1) 2/*8 U.F. W/GROUND, EX. (1) COMM. CABLE <REMOVE EX. (2) ERLSP CABLES, EX. (1) 9/*14>
3*	1	2.5 IN	3 FT	-	<REMOVE EX. (2) ERLSP CABLES, EX. (1) 9/*14>
4*	1	2.5 IN	36 FT	-	<REMOVE EX. (2) ERLSP CABLES, EX. (1) 9/*14>
5*	1	2.5 IN	58 FT	-	<REMOVE EX. (2) ERLSP CABLES, EX. (1) 9/*14>
6*	1	2.5 IN	13 FT	-	<REMOVE EX. (2) ERLSP CABLES>
7*	1	2.5 IN	20 FT	-	EX. (2) ERLSP CABLES
8*	1	2.5 IN	4 FT	-	EX. (1) ERLSP CABLE
9*	1	2.5 IN	61 FT	-	EX. (1) ERLSP CABLE
10*	1	2.5 IN	4 FT	-	EX. (1) ERLSP CABLE
11	1	3.0 IN	7 FT	T	[NEW (2) 9/*14, (1) 5/*14, (1) *6 GROUND]
12	1	4.0 IN	13 FT	T	[NEW (5) 5/*14, (1) *6 GROUND, ERLSP CABLES]
13	1	4.0 IN	61 FT	O	[NEW (2) 5/*14, (1) *6 GROUND]
14	1	2.5 IN	9 FT	O	[NEW (2) 5/*14, (1) *6 GROUND]
15	1	4.0 IN	57 FT	T/O	[NEW (3) 5/*14, (1) *6 GROUND, ERLSP CABLES]
16	1	2.5 IN	25 FT	T	[NEW (1) 5/*14, (1) *6 GROUND]
17	1	4.0 IN	70 FT	T/O	[NEW (2) 5/*14, (1) *6 GROUND, ERLSP CABLES]
18	1	2.5 IN	7 FT	O	[NEW (1) 5/*14, (1) *6 GROUND]
19	1	2.5 IN	35 FT	T	[NEW (1) 5/*14, (1) *6 GROUND]
20	1	4.0 IN	9 FT	O	[NEW (1) *6 GROUND, ERLSP CABLES]
21*	1	2.0 IN	47 FT	-	EX. (1) COMM. CABLE
22*	1	2.0 IN	XX FT	-	EX. (1) COMM. CABLE

* DENOTES EXISTING CONDUIT B = BORE, T = TRENCH, O = OPEN CUT

NOTES:

1. EXISTING LOOP DETECTORS - TO REMAIN:
   RED LIGHT CAMERA DETECTION LOOPS - WESTBOUND 2ND STREET.
2. THE PROPOSED SIGNAL POLE WILL BE A DELDOT MAST ARM POLE.
3. CO #1 IS NOT DRAWN TO SCALE, NOR IS THE DIRECTION NECESSARILY CORRECT.
4. ALL SIGNAL EQUIPMENT REMOVED FROM A PROJECT IS TO BE RETURNED TO THE CITY OF WILMINGTON. DELDOT'S TRAFFIC CONTRACTOR SHALL CONTACT MARK POWELL OF THE CITY OF WILMINGTON AT 302-576-3086 TO COORDINATE THE TRANSPORTATION AND STORAGE OF ALL SIGNAL EQUIPMENT REMOVED FROM THE PROJECT.
5. POLE BASES AND CONDUIT JUNCTION WELLS TO BE REMOVED IN ACCORDANCE WITH SECTION 211 OF THE STANDARD SPECIFICATIONS OR AS DIRECTED BY ENGINEER. EXISTING CONDUIT IS TO BE ABANDONED.
6. ALL GALVANIZED CONDUIT (GRC) SHALL BE REAMED AND THREADED. ALL GRC SHALL BE THREADED TOGETHER WITH APPROVED COUPLINGS. SET SCREW, BOLTED, AND COMPRESSION FITTING ARE NOT ACCEPTABLE.
7. ALL UNDERGROUND AND OVERHEAD UTILITIES SHOWN ON THESE PLANS ARE SCHEMATIC ONLY AND MAY NOT BE COMPLETE. THE CONTRACTOR SHALL BE RESPONSIBLE FOR NOTIFYING MISS UTILITY, AND/OR THE APPROPRIATE UTILITY PRIOR TO THE BEGINNING OF CONSTRUCTION FOR THE UTILITY MARKOUTS. IF THE CONTRACTOR PERCEIVES THAT A CONFLICT BETWEEN UTILITIES AND THE TRAFFIC SIGNAL WILL OCCUR, THE CONTRACTOR SHALL NOTIFY DELDOT TRAFFIC IMMEDIATELY BEFORE CONSTRUCTION.
8. ALL CONDUITS SHALL BE SCHEDULE 80 PVC WHEN INSTALLED BY TRENCHING OR OPEN CUT AND HDPE SDR-13.5 WHEN INSTALLED BY BORING, UNLESS OTHERWISE NOTED.
9. THE CONTRACTOR SHALL BE RESPONSIBLE FOR THE INSTALLATION AND REMOVAL OF ALL UNDERGROUND SIGNAL EQUIPMENT - E.G., JUNCTION WELLS, CABINET AND POLE BASES, AND CONDUIT. DELDOT'S TRAFFIC CONTRACTOR SHALL BE RESPONSIBLE FOR THE INSTALLATION AND REMOVAL OF ALL ELECTRICAL CABLES AND ABOVE GROUND SIGNAL EQUIPMENT - E.G., HEADS, POLES, MAST ARMS, SPAN WIRES, AND CABINETS.
10. DELDOT'S TRAFFIC CONTRACTOR SHALL REMOVE THE EXISTING SIGNAL POLE AND CONVERT THE POLE MOUNTED CABINET TO A GROUND MOUNTED CABINET. CONCRETE AND ADDITONAL CONDUIT SWEEPS SHALL BE ADDED TO THE EXISTING POLE BASE, TYPE 3 TO CREATE A CABINET BASE. THE EXISTING POWER FEED AND ERLSP CAMERA FEED IS TO REMAIN.
11. THE CONTRACTOR SHALL COORDINATE THE RELOCATION OF THE RED LIGHT CAMERA CABLES PRIOR TO REMOVAL OF THE EXISTING JUNCTION WELL, TYPE 1.
12. DELDOT'S TRAFFIC CONTRACTOR SHALL INSTALL BACKPLATES ON PROPOSED SIGNAL HEADS 1-3.
13. ALL PEDESTRIAN SIGNALS SHALL CONTAIN PEDESTRIAN COUNTDOWN DISPLAYS.

MAST ARM SCHEDULE

MA*	HEIGHT OF POLE	LENGTH OF ARM	# OF HEADS	SF OF PR. SIGNING	ARM MOUNT HEIGHT
1	21'-6"	50 FT	3	30.0 SF	20'-0"
2	21'-6"	50 FT	3	31.5 SF	18'-0"

* FIELD ADJUST AS NECESSARY

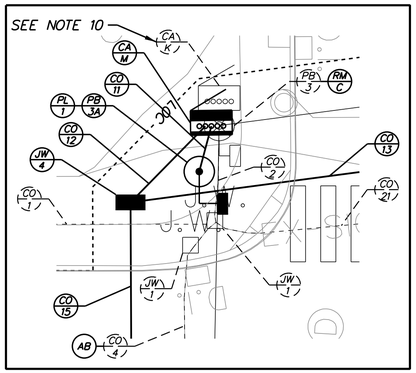

NW CORNER DETAIL
SCALE: 1" = 10'

NOTE: THIS SIGNAL WORK REQUIRES DIRECT COORDINATION WITH WILMINGTON'S RLCSP VENDOR.

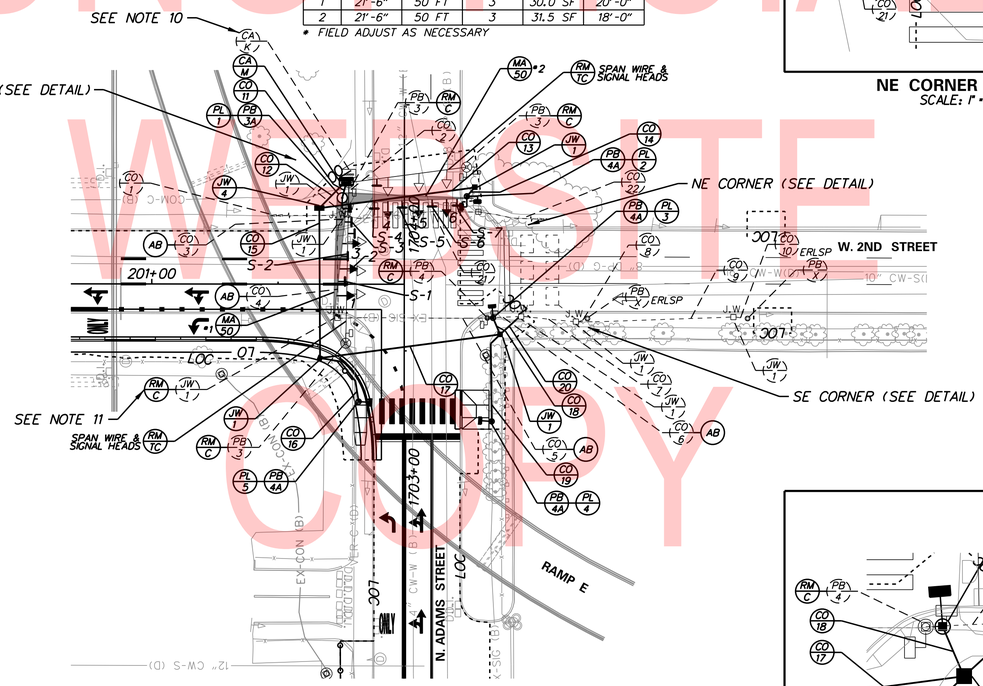

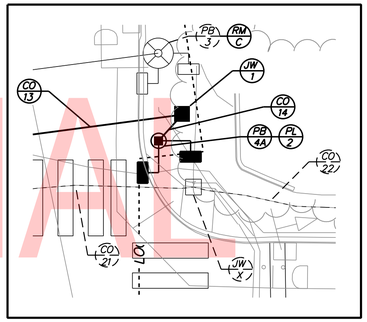

NE CORNER DETAIL
SCALE: 1" = 10'

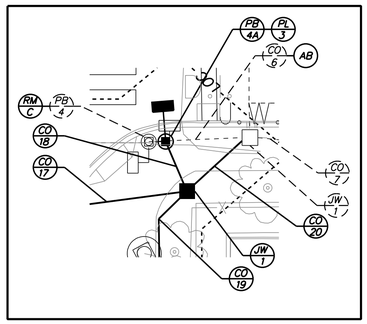

SE CORNER DETAIL
SCALE: 1" = 10'

PROPOSED OVERHEAD SIGNING

S-1
R3-2 (36"x36")

S-2**
D3-1 (72"x18")
8"/6" D-SERIES
(BACK-TO-BACK)
N. Adams St
N. Adams St

S-3
R10-11 (36"x48")
NO TURN ON RED

S-4
R3-5L (30"x36")
ONLY

S-5
R3-6L (30"x36")

S-6**
D3-1 (60"x18")
8"/6" D-SERIES
(BACK-TO-BACK)
W. 2nd St
W. 2nd St

S-7
R3-1 (36"x36")

**FREE-SWINGING MOUNTS

PROPOSED POLE SCHEDULE

NO.	TYPE	STATION	OFFSET
1	50' & 50' TWIN MAST ARMS W/ TYPE 3A BASE	1704+10.5	24.6' LT.
2	PEDESTRIAN POLE W/ TYPE 4A BASE	1704+11.2	24.7' RT.
3	PEDESTRIAN POLE W/ TYPE 4A BASE	1703+63.1	35.1' RT.
4	PEDESTRIAN POLE W/ TYPE 4A BASE	1703+22.1	34.7' RT.
5	PEDESTRIAN POLE W/ TYPE 4A BASE	1703+29.9	18.0' LT.

SIGNAL PHASING

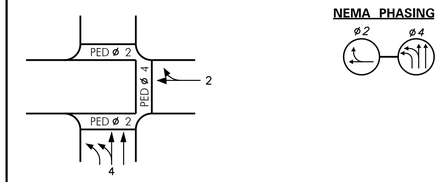

PHASING NOTES
1. PHASES ASSOCIATED BY A SOLID LINE WILL NOT OPERATE CONCURRENTLY.
2. PHASES ASSOCIATED BY A DASHED LINE WILL OPERATE CONCURRENTLY.

SIGNAL HEAD DIAGRAM

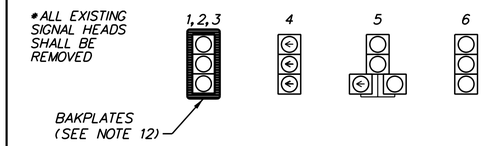

LEGEND

AB	ABANDON	OH (*)	EXISTING OVERHEAD RUN IDENTIFIER (* OF OVERHEAD RUN)
CA (X)	EXISTING CABINET IDENTIFIER (TYPE OF CABINET)	OH (*)	PROPOSED OVERHEAD RUN IDENTIFIER (* OF OVERHEAD RUN)
CA X	PROPOSED CABINET IDENTIFIER (TYPE OF CABINET)	PB (X)	EXISTING POLE BASE IDENTIFIER (TYPE OF POLE BASE)
CO (*)	EXISTING CONDUIT RUN IDENTIFIER (* OF CONDUIT RUN)	PB X	PROPOSED POLE BASE IDENTIFIER (TYPE OF POLE BASE)
CO *	PROPOSED CONDUIT RUN IDENTIFIER (* OF CONDUIT RUN)	PL (X)	EXISTING POLE IDENTIFIER (* OF POLE)
JW (X)	EXISTING JUNCTION WELL IDENTIFIER (TYPE OF JUNCTION WELL)	PL X	PROPOSED POLE IDENTIFIER (* OF POLE)
JW X	PROPOSED JUNCTION WELL IDENTIFIER (TYPE OF JUNCTION WELL)	RM C	REMOVE BY CONTRACTOR
MA (XX)	EXISTING MAST ARM IDENTIFIER (LENGTH OF ARM)	RM O	REMOVE BY OTHERS
MA XX	PROPOSED MAST ARM IDENTIFIER (LENGTH OF ARM)	RM TC	REMOVE BY TRAFFIC CONTRACTOR

	EXISTING SYMBOL	PROPOSED SYMBOL
JUNCTION WELL	J.W.	
LOOP DETECTOR, TYPE 1		
LOOP DETECTOR, TYPE 2		
LUMINAIRE		
MAST ARM		
MICROWAVE DETECTION		
OPTICOM RECEIVER		
OVERHEAD SIGNING		
PEDESTRIAN POLE/BASE		
PEDESTRIAN PUSHBUTTON		
PEDESTRIAN SIGNAL HEAD		
RIGHT-OF-WAY		R/W
SERVICE PEDESTAL	P	P
SIGNAL CABINET		
SIGNAL HEAD		
SIGNAL POLE/BASE		
CCTV CAMERA		
SPAN WIRE	XX	
UTILITY POLE		
VIDEO DETECTION		

PREPARED BY

WRA Whitman, Requardt and Associates, LLP
Engineers • Architects • Environmental Planners Est. 1915

THIS SEAL APPLIES TO ALL SHEETS BEARING THE "WRA" SECTION DESIGNATION. DATE SEAL

CONCURRENCE FOR INSTALLATION

CHIEF TRAFFIC ENGINEER DATE

SG-02

ADDENDA / REVISIONS

SCALE 0 30 60 90 FEET

REHABILITATION OF I-95, 2ND STREET ON-RAMP IMPROVEMENTS

CONTRACT T201907402	PERMIT NO. WILM	SIGNAL PLAN W. 2ND STREET @ N. ADAMS STREET
COUNTY NEW CASTLE	DESIGNED BY: D.W.C.	SECTION WRA
	CHECKED BY: M.J.B.	SHEET NO. 263

N:\31987-004\Contract_Ramp_D\CADD\Traffic\SG02_Adams @ 2nd.dgn
8/5/2019 8:53:24 AM

UNOFFICIAL WEBSITE COPY