GENERAL NOTES

1. THIS PROJECT IS TO BE CONSTRUCTED IN ACCORDANCE WITH THE DELAWARE DEPARTMENT OF TRANSPORTATION "STANDARD SPECIFICATIONS", DATED AUGUST 2001 AND THE DELAWARE DEPARTMENT OF TRANSPORTATION "STANDARD CONSTRUCTION DETAILS", DATED 2001, INCLUDING ALL REVISIONS UP TO THE DATE OF ADVERTISEMENT.

2. THE CONTRACTOR SHALL GIVE TWO (2) WEEKS NOTICE TO THE PROPERTY OWNER WHEN ANY FIXTURE, SHRUB OR OTHER OBJECT MUST BE REMOVED FROM THE RIGHT OF WAY OR EASEMENT AREA. IF THE OWNER HAS NOT ATTEMPTED TO SALVAGE THIS PROPERTY, THE CONTRACTOR SHALL REMOVE IT WITHOUT OBLIGATION. COMPENSATION SHALL BE INCIDENTAL TO THE CONTRACT.

3. THE ENDS OF ALL CURBS SHALL BE DEPRESSED FLUSH WITH THE PAVEMENT AT A RATIO OF TWELVE TO ONE (12:1) UNLESS OTHERWISE DIRECTED BY THE ENGINEER.

4. THE CONTRACTOR SHALL PROVIDE AND INSTALL PVC SLEEVES (4" INSIDE MINIMUM DIAMETER, 6" INSIDE MAXIMUM DIAMETER) IN PROPOSED CONCRETE SIDEWALKS, ISLANDS, AND MEDIANS FOR FUTURE TRAFFIC SIGN POSTS AS DIRECTED BY THE ENGINEER. THE LOWER END OF THE SLEEVE SHALL SIT ON THE TOP OF THE SUBBASE MATERIAL. THE COST SHALL BE INCIDENTAL TO THE CONTRACT.

5. STAGING AREAS - PROPER EROSION AND SEDIMENT CONTROL MEASURES AS DETERMINED BY THE ENGINEER SHALL BE INSTALLED IN ALL STAGING AREAS. ALL AREAS USED BY THE CONTRACTOR FOR STAGING OPERATIONS SHALL BE FULLY RESTORED BY THE CONTRACTOR UPON COMPLETION OF THE CONTRACT. IF THE STAGING AREA IS PAVED, IT SHALL BE RESTORED TO ITS ORIGINAL CONDITION. IF THE AREA IS UNPAVED, IT SHALL BE RE-GRADED, TOPSOILED, SEEDED AND MULCHED IN ACCORDANCE WITH DELAWARE STANDARD SPECIFICATIONS 732, 734 AND 735, FOR TOPSOIL, SEED AND MULCH RESPECTIVELY, TO THE SATISFACTION OF THE ENGINEER. THE SEED SHALL ADHERE TO THE SPECIFICATIONS OF SECTION 734 FOR PERMANENT GRASS SEEDING - DRY GROUND. ALL COSTS ASSOCIATED WITH RESTORATION OF THE STAGING AREA SHALL BE AT THE CONTRACTOR'S EXPENSE. IF THE ENGINEER DETERMINES THAT A SATISFACTORY STAND OF GRASS DOES NOT EXIST AT THE TIME OF FINAL INSPECTION, ALL COSTS ASSOCIATED WITH REESTABLISHING A SATISFACTORY STAND OF GRASS SHALL BE AT THE CONTRACTOR'S EXPENSE.

6. SITE REVIEWER - AN EROSION CONTROL SITE REVIEWER SHALL BE A PERSON FROM THE CONTRACTOR'S STAFF ASSIGNED TO EROSION AND SEDIMENT CONTROL IMPLEMENTATION AND MAINTENANCE AND SHALL BE REQUIRED ON SPECIFIC PROJECTS. THE NAME AND DNREC CERTIFICATION NUMBER OF EACH SITE REVIEWER SO REQUIRED SHALL BE SUBMITTED TO THE DEPARTMENT AT THE TIME OF BID. THE NAME OF THE DELAWARE REGISTERED PROFESSIONAL ENGINEER PROVIDING DIRECTION AND SUPERVISION OF THE SITE REVIEWER, AS REQUIRED IN SECTION 12.3 OF THE DELAWARE SEDIMENT AND STORMWATER REGULATIONS, SHALL ALSO BE SUBMITTED TO THE DEPARTMENT AT THE TIME OF BID. THE SITE REVIEWER REQUIREMENTS IN EFFECT ON THIS PROJECT SHALL BE MARKED WITH AN "X" BELOW:

EROSION POTENTIAL FOR THIS PROJECT	SITE REVIEWER REQUIREMENT
( ) INSIGNIFICANT	NONE
( ) MINOR	CONTRACTOR CERTIFICATION COURSE TRAINING ONLY, AS DEFINED IN SECTION 1.3 OF THE DELAWARE SEDIMENT AND STORMWATER REGULATIONS.
( ) MEDIUM	AT THE TIME OF BID OF THE CONTRACT, EITHER THE SUPERINTENDENT OR A SEPARATE INDIVIDUAL FROM THE CONTRACTOR'S STAFF SHALL BE A CERTIFIED CONSTRUCTION REVIEWER (CCR), AS DEFINED IN SECTION 12 OF THE DELAWARE SEDIMENT AND STORMWATER REGULATIONS.
(X) MAJOR	SUPERINTENDENT AND AN INDIVIDUAL FROM CONTRACTOR'S STAFF SHALL BE CCR. ONE INDIVIDUAL FROM THE CONTRACTOR'S STAFF MUST BE A CCR AT THE TIME OF BID OF THE CONTRACT. THE SUPERINTENDENT MUST BECOME A CCR WITHIN ONE YEAR AFTER THE AWARD OF CONTRACT.

7. ELECTRONIC PROJECT FILES THAT WILL BE MADE AVAILABLE TO THE CONTRACTOR INCLUDE:

( )	NONE
(X)	ASCII DATA FILES WITH COORDINATES AND ELEVATIONS FOR PROPOSED POINTS AS SELECTED BY THE ENGINEER.
(X)	RASTER FILES, IN .CAL FILE FORMAT, FOR ALL PLAN SHEETS.
( )	EXISTING DIGITAL TERRAIN MODEL, IN .DTM FILE FORMAT, COMPATIBLE WITH SOFTWARE CURRENTLY USED BY DELDOT.
( )	PROPOSED DIGITAL TERRAIN MODEL, IN .DTM FILE FORMAT, COMPATIBLE WITH SOFTWARE CURRENTLY USED BY DELDOT.
( )	DESIGN FILE, IN .DGN FILE FORMAT, CONTAINING ONLY THE PROPOSED 3D TRIANGLES OF THE PROPOSED DIGITAL TERRAIN MODEL (DTM).

8. AMERICAN TRAFFIC SAFETY SERVICES ASSOCIATION (ATSSA) CERTIFIED TRAFFIC CONTROL SUPERVISOR REQUIREMENT FOR THIS PROJECT.

( )	THE CONTRACTOR SHALL NOT BE REQUIRED TO HAVE AN ATSSA SUPERVISOR ASSIGNED TO THIS PROJECT.
( )	THE CONTRACTOR SHALL HAVE AN ATSSA SUPERVISOR ASSIGNED TO THIS PROJECT. THE CONTRACTOR'S GENERAL SUPERINTENDENT FOR THIS PROJECT OR ANOTHER ATSSA CERTIFIED MEMBER OF THE CONTRACTOR'S PROJECT STAFF MAY BE THE ATSSA SUPERVISOR.
(X)	THE CONTRACTOR SHALL HAVE AN ATSSA SUPERVISOR ASSIGNED TO THIS PROJECT. THE ATSSA SUPERVISOR'S SOLE JOB SHALL BE SUPERVISION OF THE INSTALLATION, OPERATION AND MAINTENANCE OF TRAFFIC CONTROL DEVICES FOR THIS PROJECT. THE CONTRACTOR'S GENERAL SUPERINTENDENT FOR THIS PROJECT SHALL NOT BE THE ATSSA SUPERVISOR.

9. THE DISTURBED AREA FOR THIS PROJECT IS 105.94 ACRES.

PROJECT NOTES

SECTION 100

1. ANY DAMAGE TO ITEMS NOTED TO BE RELOCATED OR RESET BY THE CONTRACTOR, AT THE DISCRETION OF THE ENGINEER, SHALL BE REPAIRED AND/OR REPLACED IN KIND AT THE CONTRACTOR'S EXPENSE.

2. UNLESS OTHERWISE NOTED ON THE PLANS, THE CONTRACTOR SHALL, AS PART OF HIS PROJECT SCHEDULE, SUBMIT TO THE ENGINEER AN ESTIMATE OF THE MONTHLY PAYMENTS EXPECTED TO BE RECEIVED ON THE CONTRACT. THIS WILL BE REFERENCED AS THE "MONTHLY SPEND PAYMENT CHART".

   A CHART IN MICROSOFT EXCEL, MICROSOFT WORD, OR HAND WRITTEN FORMAT WILL BE ACCEPTABLE FOR THIS PURPOSE. THE CHART SHOULD INCLUDE, AS A MINIMUM, COLUMNS FOR THE MONTH, YEAR AND ESTIMATED MONTHLY PAYMENTS. THE TOTAL OF ALL ESTIMATED MONTHLY PAYMENTS SHOULD EQUAL THE AWARDED CONTRACT TOTAL BID PRICE.

   THE ENGINEER MAY REQUEST AN UPDATED "MONTHLY SPEND PAYMENT CHART" AT HIS DISCRETION, DEPENDING ON THE ACCURACY OF THE INITIAL ESTIMATES AND ACCORDING TO THE OVERALL NEEDS OF THE DEPARTMENT.

   THE "MONTHLY SPEND PAYMENT CHART" WILL NOT BE CONSIDERED A BINDING DOCUMENT BY EITHER THE CONTRACTOR OR THE DEPARTMENT AND IS CONSIDERED SOLELY INFORMATIONAL.

   ON PROJECTS REQUIRING CPM SCHEDULES, THE CONTRACTOR MAY, BUT IS NOT REQUIRED TO, "COST LOAD" THE CPM SCHEDULE IN ORDER TO GENERATE THE MONTHLY PAYMENT ESTIMATES.

   COSTS TO PREPARE AND/OR UPDATE THE "MONTHLY SPEND PAYMENT CHART" ARE ADDRESSED AS FOLLOWS:

   A. ON CONTRACTS REQUIRING CPM SCHEDULES AND UPDATES, PREPARATION OF THE INITIAL CHART SHALL BE INCIDENTAL TO ITEM 763508. UPDATES SHALL BE INCIDENTAL TO ITEM 763509.

   B. ON CONTRACTS NOT REQUIRING CPM SCHEDULES, THE COST TO PREPARE AND UPDATE THE "MONTHLY SPEND PAYMENT CHART" SHALL BE INCLUDED IN ITEM 763000 - INITIAL EXPENSE.

SECTION 200

3. THE ENGINEER MAY REQUIRE THE CONTRACTOR TO EXCAVATE TEST PITS ALONG PROPOSED DRAINAGE RUNS, AT POINTS OF POSSIBLE UTILITY CONFLICTS, TO DETERMINE IF A CONFLICT EXISTS. ANY CONFLICTS SHALL BE COORDINATED BY THE CONTRACTOR, WITH THE ENGINEER AND THE UTILITY COMPANY INVOLVED. THE ENGINEER SHALL ULTIMATELY DETERMINE THE SOLUTION TO THE UTILITY CONFLICT. TEST HOLES SHALL BE MEASURED AND PAID FOR IN ACCORDANCE WITH ITEM 208000 - EXCAVATION AND BACKFILL FOR PIPE TRENCHES, BUT ONLY TO THE ACTUAL DEPTH EXCAVATED.

4. ITEMS TO BE REMOVED UNDER ITEM 211000 - REMOVAL OF STRUCTURES AND OBSTRUCTIONS SHALL INCLUDE, BUT NOT BE LIMITED TO THE FOLLOWING:
   - POLE BASE EXCAVATION BEYOND THE LIMITS OF THE ROADWAY TEMPLATE EXCAVATION
   - BRIDGES
   - OVERHEAD SIGN STRUCTURES
   - CANTILEVER SIGN STRUCTURES
   - BRIDGE MOUNTED SIGN STRUCTURES
   - CONCRETE HEADWALLS
   - DRAINAGE MANHOLES
   - HIGH MAST LIGHTS

△3 ITEMS REMOVED UNDER 211000 SHALL BE REMOVED TO THE LIMITS DESCRIBED IN STANDARD SPECIFICATION 211000 OR TO A DEPTH OF 3' BELOW PROPOSED GRADE, WHICHEVER IS GREATER.

5. LIMITS OF REMOVAL SHALL INCLUDE ALL ABOVE GROUND FEATURES AND FOUNDATIONS TO A POINT 3' BELOW FINISHED GRADE, UNLESS OTHERWISE NOTED IN THE PLANS. EXISTING DRAINAGE PIPES SHALL BE REMOVED WHERE SHOWN ON PLANS AND PAYMENT SHALL BE INCIDENTAL TO ITEM 202000, EXCAVATION AND EMBANKMENT. ALL EXISTING OVERHEAD, CANTILEVER, AND BRIDGE MOUNTED SIGN PANELS AND SIGN STRUCTURES SHALL BECOME THE PROPERTY OF THE CONTRACTOR FOLLOWING REMOVAL.

6. THIS PROJECT IS COVERED UNDER AN NPDES GENERAL PERMIT FOR CONSTRUCTION. UNDER THE GENERAL PERMIT, COMPLIANCE WITH DELDOT'S APPROVED SEDIMENT AND STORMWATER MANAGEMENT PLANS WILL CONSTITUTE COMPLIANCE WITH THE NPDES INDUSTRIAL PERMITTING REQUIREMENTS FOR THIS CONSTRUCTION PROJECT. A COPY OF THE NPDES GENERAL PERMIT AND NOI IS KEPT ON FILE IN EACH OF THE CONSTRUCTION OFFICES AND THE DEPARTMENT'S TEAM SUPPORT SECTION. A COPY OF THE GENERAL PERMIT OR THE NOI CAN BE OBTAINED UPON REQUEST FROM EITHER THE DEPARTMENT'S STORMWATER ENGINEER OR THE APPROPRIATE CONSTRUCTION ENGINEER.

7. ALL EXISTING DRAINAGE SYSTEMS SHOWN WITHIN THE RIGHT-OF-WAY ARE TO REMAIN OPERATIONAL UNLESS DENOTED FOR ABANDONMENT AT THE END OF THIS PROJECT'S CONSTRUCTION. ALL EXISTING DRAINAGE STRUCTURES AND PIPES WITHIN THE PROJECT LIMITS SHALL BE CLEANED OF ALL SEDIMENT AND DEBRIS IN COMPLIANCE WITH DNREC GUIDELINES AS DIRECTED BY THE ENGINEER. COST TO BE INCLUDED IN ITEM 250000, SEDIMENT REMOVAL.

△3 7A. "SUPPORT OF EXCAVATION IS ANTICIPATED. THE CONTRACTOR SHALL SUBMIT DETAILED LAYOUT, WORKING DRAWINGS AND CALCULATIONS FOR APPROVAL IN ACCORDANCE WITH THE REQUIREMENTS OF SECTION 207.04"

SECTION 300

8. A. THE CONTRACTOR MAY ELECT TO USE ANY OF THE FOLLOWING MATERIALS TO MEET THE REQUIREMENTS OF ITEM 302007 - GRADED AGGREGATE BASE COURSE, TYPE 'B':
      a. CRUSHED STONE (PER STANDARD SPECIFICATION 821)
      b. CRUSHED CONCRETE (PER STANDARD SPECIFICATION 821)
      c. HOT-MIX MILLINGS (PER SPECIAL PROVISION 302514 MILLED HOT-MIX BASE COURSE)

      THE CONTRACTOR WILL NOT BE ALLOWED TO MIX DIFFERENT MATERIALS (OR SIMILAR MATERIALS FROM DIFFERENT SOURCES) TO MEET THE REQUIREMENTS OF ITEM 302007 - GRADED AGGREGATE BASE COURSE, TYPE 'B'.

      ALL OF THE ABOVE LISTED MATERIALS ARE PERMITTED FOR USE ON THE JOB, PROVIDED THEY ARE SEPARATED INTO APPROVED AREAS. EACH AREA OF BASE COURSE MUST BE CONSTRUCTED USING MATERIALS FROM A SINGULAR SOURCE, FULL DEPTH, IN ORDER THAT PROPER TESTING MAY BE ACCOMPLISHED. THE CONTRACTOR AND DELDOT'S PROJECT ENGINEER SHALL AGREE ON THE LIMITS OF EACH SOURCE OF MATERIAL PRIOR TO PLACEMENT.

   B. THE QUANTITY USED FOR BASE OF EACH OF THE ABOVE LISTED MATERIALS WILL BE THE CONTRACTOR'S CHOICE, WITH THE TOTAL MEETING THE ADVERTISED QUANTITY OF ITEM 302007 - GRADED AGGREGATE BASE COURSE, TYPE 'B'.

   C. THE CONTRACTOR MAY ALSO ELECT TO RECYCLE MILLINGS FOR USE IN HOT-MIX AS PERMITTED BY THE STANDARD SPECIFICATIONS. THE CHOICE OF THE QUANTITY OF MILLINGS USED FOR THIS PURPOSE, OR FOR BASE COURSE, LIES WITH THE CONTRACTOR. ALL MILLING MATERIAL SHALL BECOME PROPERTY OF THE CONTRACTOR.

   D. HOT-MIX MILLINGS MAY BE GENERATED FROM THE FOLLOWING SOURCES:
      a. MATERIAL MADE AVAILABLE WHEN MILLED ON THIS CONTRACT UNDER ITEM 760507.
      b. MATERIAL MILLED ON THIS CONTRACT AT THE CONTRACTOR'S CHOICE UNDER ITEM 202000.
      c. MILLED MATERIAL FURNISHED ON THE JOB FROM THE CONTRACTOR'S YARD OR OTHER OUTSIDE SOURCE.

   ALL MILLED MATERIALS SHALL MEET THE MATERIAL REQUIREMENTS OF ITEM 302514 - MILLED HOT-MIX BASE COURSE.

   E. PAYMENT CLARIFICATION:
      a. SHOULD THE CONTRACTOR ELECT TO MILL PORTIONS OF HOT-MIX SHOWN ON THE PLANS TO BE REMOVED UNDER ITEM 202000 - EXCAVATION AND EMBANKMENT THE COST OF MILLING THIS HOT-MIX WILL BE PAID AS ITEM 202000 - EXCAVATION AND EMBANKMENT. THE MILLINGS GENERATED MAY BE RECYCLED INTO HOT-MIX, UTILIZED FOR BASE COURSE, OR DISPOSED OF TO AN APPROVED SITE. HAULING COSTS FOR DISPOSAL AND/OR RECYCLING ARE INCIDENTAL TO ITEM 202000 - EXCAVATION AND EMBANKMENT.

      b. MILLINGS GENERATED UNDER ITEM 760507 - PROFILE MILLING, HOT-MIX MAY BE RECYCLED INTO HOT-MIX, UTILIZED FOR BASE COURSE OR DISPOSED OF BY THE CONTRACTOR TO AN APPROVED SITE. NO SEPARATE PAYMENT WILL BE MADE FOR TRANSPORTING MILLINGS ON SITE OR TO AN APPROVED DISPOSAL SITE.

      c. SHOULD THE CONTRACTOR ELECT TO TEMPORARILY STOCKPILE MILLINGS ON THE JOB SITE FOR LATER USE, ALL COSTS FOR STOCKPILING AND SUBSEQUENT REHANDLING SHALL BE INCIDENTAL TO ITEM 202000 - EXCAVATION AND EMBANKMENT.

      d. MILLINGS USED FOR BASE COURSE SHALL BE PLACED IN ACCORDANCE WITH THE REQUIREMENTS OF SPECIAL PROVISION 302514 - MILLED HOT-MIX BASE COURSE. NO SEPARATE PAYMENT WILL BE MADE TO FURNISH MILLINGS FROM AN OUTSIDE SOURCE OR TRANSPORT MILLINGS WITHIN THE PROJECT LIMITS. MILLINGS USED FOR BASE COUSRE WILL BE PAID IN PLACE AT THE UNIT BID PRICE FOR ITEM 302007 - GRADED AGGREGATE BASE COUSRE, TYPE 'B'.

      e. ALL COSTS TO UTILIZE MILLINGS IN RECYCLED HOT-MIX WILL BE INCIDENTAL TO THE UNIT PRICE BID FOR THE HOT-MIX ITEM USING THE RECYCLED MATERIAL.

      f. SPECIAL PROVISION 302514 - MILLED HOT-MIX BASE COURSE IS PROVIDED TO SPECIFY THE MEANS OF LAY DOWN AND COMPACTION AS WELL AS THE MATERIAL REQUIREMENTS FOR MILLINGS USED AS BASE COURSE. ALL COSTS TO BRING THE MILLINGS INTO COMPLIANCE WITH THE REQUIREMENTS OF ITEM - 302514 MILLED HOT-MIX BASE COURSE ARE INCIDENTAL TO ITEM 302007 - GRADED AGGREGATE BASE COURSE, TYPE 'B'. NO PAYMENT WILL BE MADE FOR ITEM 302514 - MILLED HOT-MIX BASE COURSE. THE QUANTITY OF MILLINGS USED FOR BASE COURSE WILL BE PAID FOR UNDER ITEM 302007 - GRADED AGGREGATE BASE COURSE.

SECTION 500

9. ALL JOINTS IN THE PCC PAVEMENT SHALL BE INSTALLED PER THE STANDARD CONSTRUCTION DETAILS. THE COST OF DOWEL BARS AND TIE BARS SHALL BE INCLUDED IN ITEM 501006, PCC PAVEMENT 12".

SECTION 600

10. THE DEPARTMENT AND THE CONTRACTOR SHALL INSPECT ALL EXISTING PIPES AND DRAINAGE STRUCTURES TO BE USED IN THE FINAL DRAINAGE SYSTEM AND AGREE ON THE CONDITION PRIOR TO THE START OF CONSTRUCTION. EXISTING PIPES AND DRAINAGE STRUCTURES DAMAGED DUE TO CONTRACTOR OPERATIONS SHALL BE REPAIRED OR REPLACED IN-KIND AT THE CONTRACTOR'S EXPENSE. THE CONTRACTOR IS REQUIRED TO VIDEO INSPECT NEW PIPE RUNS TO CONFIRM CONDITION PRIOR TO ACCEPTANCE. PAYMENT FOR VIDEO INSPECTION OF NEW PIPES WILL BE MADE UNDER ITEM 612529 - VIDEO INSPECTION.

10A. ALL STRUCTURES SHALL BE CONSTRUCTED IN ACCORDANCE WITH "AASHTO LRFD BRIDGE CONSTRUCTION SPECIFICATION 2ND EDITION, DATED 2004 WITH INTERIM REVISIONS TO 2009."

SECTION 700

11. IN AREAS WHERE PROPOSED CURB MEETS EXISTING CURB AND THE TWO CURB TYPES ARE NOT SIMILAR, THE PROPOSED CURB SHALL BE TRANSITIONED IN 10 LINEAR FEET, UNLESS OTHERWISE DIRECTED BY THE ENGINEER. PAYMENT FOR THIS WORK, INCLUDING SAW CUTTING EXISTING CURB SHALL BE INCIDENTAL TO THE PROPOSED CURB ITEM.

12. WHERE PROPOSED CONCRETE SIDEWALK IS CONSTRUCTED TO MEET EXISTING SIDEWALK, THE EXISTING SIDEWALK SHALL BE SAWCUT AT THE TIE-IN POINT OR MEET THE NEAREST EXISTING SIDEWALK JOINT. ALL SAW CUTTING SHALL BE FULL DEPTH, UNLESS OTHERWISE NOTED ON THE PLANS OR DIRECTED BY THE ENGINEER AND SHALL BE PAID FOR UNDER ITEM 762002 - SAWCUTTING, CONCRETE, FULL DEPTH.

13. PORTLAND CEMENT CONCRETE CHANNELIZING ISLANDS THAT ARE LESS THAN 75 SQ FT MAY BE POURED MONOLITHICALLY, OR AS DIRECTED BY THE ENGINEER.

14. STATION AND ELEVATION DATA GIVEN FOR DRAINAGE STRUCTURES ARE TO BE APPLIED TO THE CENTER OF THE GRATE FOR INLETS, AND TO THE CENTER OF THE STRUCTURE FOR JUNCTION BOXES AND MANHOLES.

15. DRAINAGE INLET GRATES ADJACENT TO THE ROAD, WITHIN THE PROJECT LIMITS, WHICH ARE NOT TYPE 1 SHALL BE REPLACED. THE ACTUAL LOCATIONS, THE NEED FOR ANY GRATE MODIFICATIONS OR FOR NEW FRAMES SHALL BE DETERMINED BY THE ENGINEER. ALL REPLACED GRATES/FRAMES SHALL BE DELIVERED TO THE NEAREST DISTRICT MAINTENANCE YARD WITH THE COST OF DELIVERY INCIDENTAL TO ITEM 708500 - REPLACING CATCH BASIN GRATES. FINAL PAYMENT FOR REPLACED GRATES/FRAMES SHALL NOT BE MADE UNTIL RECEIPT OF DELIVERED MATERIALS IS PRODUCED, SIGNED BY A DELDOT MAINTENANCE YARD SUPERVISOR.

16. THE NEW CASTLE COUNTY DEPARTMENT OF PUBLIC WORKS SHALL SUPPLY AND THE STATE'S CONTRACTOR SHALL INSTALL NEW SELF SEALING MANHOLE FRAMES AND COVERS ON ALL COUNTY SEWER MANHOLES, THAT ARE NOT BEING RELOCATED, WITHIN THE PROJECT LIMITS IN ACCORDANCE WITH THE COUNTY'S STANDARD SPECIFICATIONS. THE EXISTING MANHOLE FRAMES AND COVERS THAT ARE REMOVED SHALL BECOME THE PROPERTY OF THE STATE'S CONTRACTOR. PAYMENT SHALL BE INCIDENTAL TO ITEM 710506 - ADJUST AND REPAIR EXISTING SANITARY SEWER MANHOLE.

17. ALL PAVED AREAS TO BE RECONSTRUCTED OR WIDENED SHALL BE SAWCUT AT THE POINT WHERE THE NEW PAVEMENT IS TO TIE INTO THE EXISTING PAVEMENT.

18. ALL HOT-MIX SAW CUTTING SHALL BE FULL DEPTH, UNLESS OTHERWISE NOTED ON THE PLANS, OR AS DIRECTED BY THE ENGINEER.

19. WHERE ADJUSTMENTS ARE REQUIRED TO NEW DRAINAGE STRUCTURES I.E. DRAINAGE INLETS, MANHOLES, JUNCTION BOXES, ETC., FOR STAGED CONSTRUCTION, THE ADJUSTED TOPS SHALL BE CAST-IN-PLACE CONCRETE. ELEVATION ADJUSTMENTS SHALL NOT EXCEED 1'. THIS NOTE SHALL SUPERSEDE ANY REFERENCE TO STANDARD CONSTRUCTION METHODS AS REFERRED TO ON THE STANDARD CONSTRUCTION DETAIL SHEETS. CONTRACTOR SHALL SUBMIT DETAILED PLANS SHOWING SECTIONS, JOINTS, REINFORCEMENT AND OTHER PERTINENT INFORMATION FOR APPROVAL. COST SHALL BE INCIDENTAL TO THE RESPECTIVE DRAINAGE STRUCTURE.

20. ALL COSTS ASSOCIATED WITH CONNECTING PROPOSED CONDUIT TO EXISTING JUNCTION WELLS SHALL BE CONSIDERED INCIDENTAL TO THE COST OF THE CONDUIT BEING INSTALLED.

21. ALL GUARDRAIL POST STAKEOUT SHALL BE COORDINATED WITH EXISTING AND PROPOSED STORM DRAIN SYSTEMS, UNDERDRAIN OUTLET PIPES, AND UTILITIES TO AVOID DISTURBANCE OF THE UNDERGROUND FACILITY. COST SHALL BE INCIDENTAL TO THE GUARDRAIL ITEM BEING INSTALLED. ANY DAMAGE TO THESE SYSTEMS SHALL BE REPAIRED AT CONTRACTOR'S EXPENSE.

22. THE CONTRACTOR SHALL BE RESPONSIBLE FOR STAKING ALL RIGHT OF WAY AND EASEMENT LINES ACQUIRED FOR THE PROJECT'S CONSTRUCTION. COST SHALL BE INCLUDED IN ITEM 763501, CONSTRUCTION ENGINEERING.

UNOFFICIAL WEBSITE COPY

UNOFFICIAL WEBSITE COPY

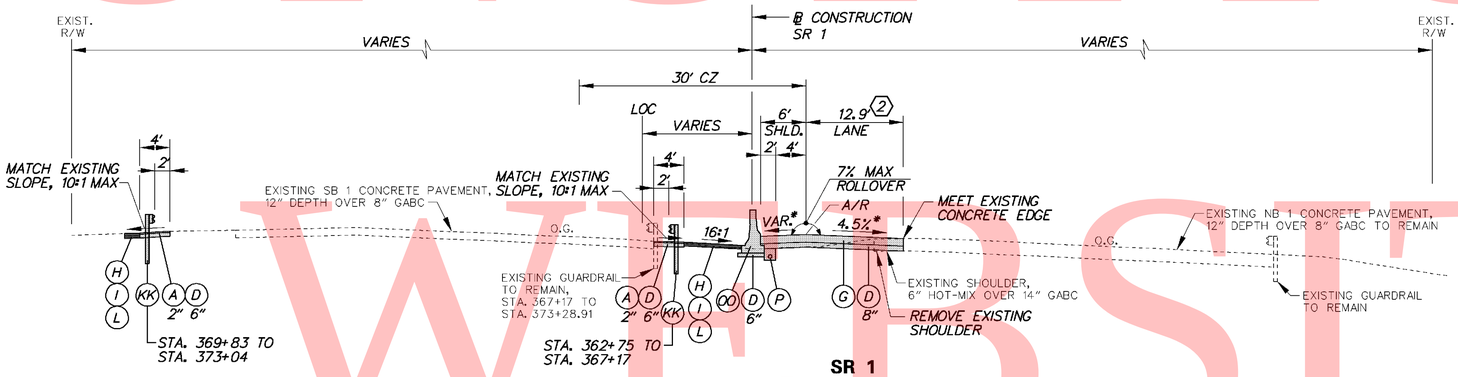

SR 1

STA. 363+00 TO STA. 373+28.91

(2) STA. 363+00 TO STA. 363+80
WIDTH TAPERS 9.86' TO 12.9'

*SR 1 CROSS-SLOPES		
STA.	LT. SHLD.	LANE
369+91.69	-2.50%	-4.50%
370+00	-2.60%	-4.40%
370+31.69	-3.00%	-4.00%
370+50	-3.23%	-3.77%
371+00	-3.85%	-3.15%
371+11.69	-4.00%	-3.00%
371+50	-4.00%	-2.52%
371+91.69	-4.00%	-2.00%
372+00	-4.00%	-2.00%
372+35	-4.00%	-2.00%
372+50	-3.00%	-2.00%
372+95	0.00%	-2.00%
373+00	0.33%	-2.00%
373+25	2.00%	-2.00%
373+28.91	2.00%	-2.00%

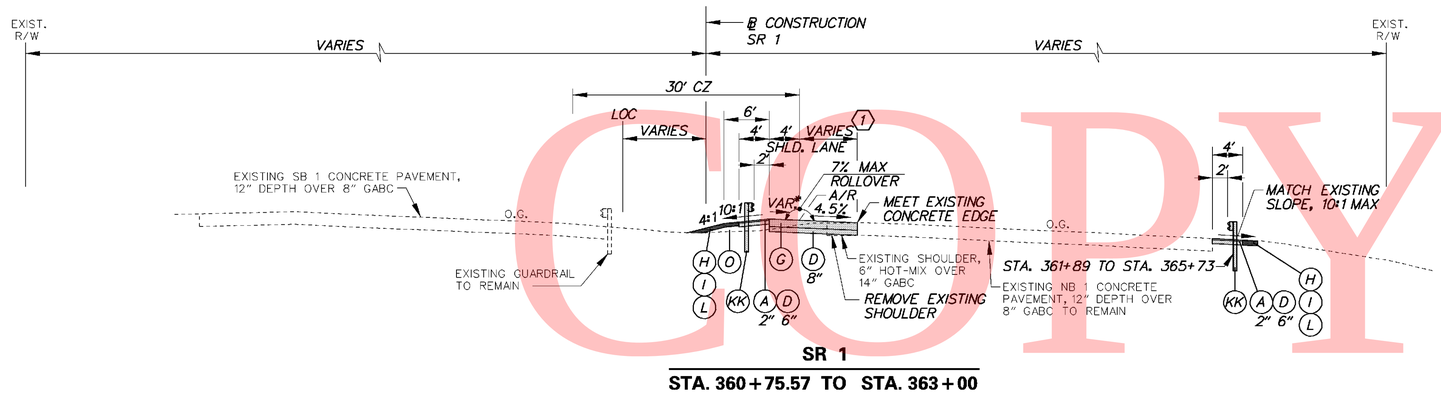

SR 1

STA. 360+75.57 TO STA. 363+00

(1) STA. 360+75.57 TO STA. 363+00
WIDTH TAPERS 1.5' TO 9.86'

*SR 1 CROSS-SLOPES		
STA.	LT. SHLD.	LANE
361+15	4.50%	-4.50%
361+50	2.17%	-4.50%
361+82.5	0.00%	-4.50%
362+00	-1.17%	-4.50%
362+20	-2.50%	-4.50%

LEGEND

- (A) ITEM 401708 - SUPERPAVE, TYPE C HOT-MIX, 160 GYRATIONS, PG 70-22 (NON-CARBONATE STONE)
- (B) ITEM 401654 - SUPERPAVE, TYPE B HOT-MIX, 160 GYRATIONS, PG 70-22
- (C) ITEM 401663 - SUPERPAVE, BITUMINOUS CONCRETE BASE COURSE, 160 GYRATIONS, PG 64-22
- (D) ITEM 302007 - GRADED AGGREGATE BASE COURSE, TYPE B
- (E) ITEM 401711 - SUPERPAVE, TYPE C HOT-MIX, 160 GYRATIONS, PG 76-22 (NON-CARBONATE STONE)
- (F) ITEM 401660 - SUPERPAVE, TYPE B HOT-MIX, 160 GYRATIONS, PG 76-22
- (G) ITEM 501006 - PORTLAND CEMENT CONCRETE PAVEMENT, 12"
- (H) ITEM 732002 - TOPSOIL, 6" DEPTH
- (I) ITEM 734013 - PERMANENT GRASS SEEDING, DRY GROUND
- (J) ITEM 602017 - PCC MASONRY, PARAPET, CLASS A
- (K) ITEM 735533 - SOIL RETENTION BLANKET MULCH, TYPE 3
- (L) ITEM 735534 - SOIL RETENTION BLANKET MULCH, TYPE 4
- (M) ITEM 735535 - SOIL RETENTION BLANKET MULCH, TYPE 5, UNLESS OTHERWISE NOTED, SEE DRAINAGE PLANS FOR LIMITS AND TYPE
- (N) ITEM 209001 - BORROW, TYPE A
- (O) ITEM 209006 - BORROW, TYPE F OR APPROVED PROJECT EXCAVATION
- (P) ITEM 715001 - PERFORATED PIPE UNDERDRAINS, 6"
- (Q) ITEM 760504 - RUMBLE STRIPS, HOT-MIX
- (R) ITEM 602772 - MECHANICALLY STABILIZED EARTH WALLS
- (S) ITEM 602773 - PCC MASONRY FOR MECHANICALLY STABILIZED EARTH WALLS
- (T) ITEM ~~720512~~ 3 720529 - PCC SAFETY BARRIER PERMANENT, SINGLE FACE
- (U) ITEM 720654 - PCC SAFETY BARRIER PERMANENT, SINGLE FACE, MODIFIED TYPE 1
- (V) ITEM 720587 - PCC SAFETY BARRIER PERMANENT, DOUBLE FACE, MODIFIED
- (W) ITEM 720655 - PCC SAFETY BARRIER PERMANENT, SINGLE FACE, MODIFIED TYPE 2
- (X) ITEM 712005 - RIPRAP, R-4
- (Y) ITEM 401665 - SUPERPAVE, TYPE C HOT-MIX, 160 GYRATIONS, PG 64-22, PATCHING
- (Z) ITEM 401666 - SUPERPAVE, TYPE B HOT-MIX, 160 GYRATIONS, PG 64-22, PATCHING
- (AA) ITEM 401667 - SUPERPAVE, BITUMINOUS CONCRETE BASE COURSE, 160 GYRATIONS, PG 64-22, PATCHING
- (BB) ITEM 302008 - GRADED AGGREGATE BASE COURSE, TYPE B, PATCHING
- (CC) ITEM 755000 - HOT-MIX, HOT LAID, BITUMINOUS CONCRETE CURB
- (DD) ITEM 701010 - PORTLAND CEMENT CONCRETE CURB, TYPE 1
- (EE) ITEM 701011 - PORTLAND CEMENT CONCRETE CURB, TYPE 2
- (FF) ITEM 701020 - INTEGRAL PORTLAND CEMENT CONCRETE CURB AND GUTTER, TYPE 1
- (GG) ITEM 701023 - INTEGRAL PORTLAND CEMENT CONCRETE CURB AND GUTTER, TYPE 4
- (HH) ITEM 701026 - PORTLAND CEMENT CONCRETE MONOLITHIC MEDIAN
- (II) ITEM 701027 - PORTLAND CEMENT CONCRETE CURB, TYPE 1 MODIFIED
- (JJ) ITEM 720658 - PCC SAFETY BARRIER PERMANENT SINGLE FACE, MODIFIED, TYPE 5
- (KK) ITEM 720050 - GALVANIZED STEEL BEAM GUARDRAIL, TYPE 1
- (LL) ITEM 760507 - PROFILE MILLING, HOT-MIX
- (MM) ITEM 720656 - PCC SAFETY BARRIER PERMANENT, SINGLE FACE, MODIFIED, TYPE 3
- (NN) ITEM 720657 - PCC SAFETY BARRIER PERMANENT, SINGLE FACE, MODIFIED, TYPE 4
- (OO) ITEM 720651 - PCC SAFETY BARRIER PERMANENT, DOUBLE FACE, BIFURCATED, TYPE 1
- (PP) ITEM 720652 - PCC SAFETY BARRIER PERMANENT, DOUBLE FACE, BIFURCATED, TYPE 2
- (RR) ITEM 401668 - SUPERPAVE, TYPE C HOT-MIX, 160 GYRATIONS, PG 64-22, WEDGE
- (SS) ITEM 401669 - SUPERPAVE, TYPE B HOT-MIX, 160 GYRATIONS, PG 64-22, WEDGE

PAVEMENT LIFT NOTE:

THE MAXIMUM LIFTS FOR THE INDIVIDUAL PAVING MATERIAL ARE AS FOLLOWS:
SUPERPAVE, TYPE C HOT-MIX - 2"
SUPERPAVE, TYPE B HOT-MIX - 3"
SUPERPAVE, BIT. CONC. BASE COURSE - 6"
GRADED AGGREGATE BASE COURSE - 8"

NOTES:

1) THE PGA IS APPLIED TO THE TOP OF THE FINAL PAVEMENT SURFACE.

DELAWARE DEPARTMENT OF TRANSPORTATION

ADDENDUMS / REVISIONS	
ADDENDUM NO. 3 CHANGED ITEM NO.,	
02/18/2011, RLS	

NOT TO SCALE

SR1 / I-95 INTERCHANGE

CONTRACT	BRIDGE NO.	
28-090-03	DESIGNED BY:	
COUNTY	CHECKED BY:	
NEW CASTLE		

TYPICAL SECTIONS

SHEET NO.
6
TOTAL SHTS.
803

2/15/2011 11:35:03 AM
M:\PROJECTS\2003\03059_DELTRNPK\SRTMALL\CADD\2809003\PLANS\TS01_SR1.DGN

UNOFFICIAL WEBSITE COPY

*NB 7 CROSS-SLOPES			
STA.	LT. SHLD.	LANES	RT. SHLD.
605+82.01	-6.00%	6.00%	-1.00%
606+00	-6.00%	6.00%	-0.19%
606+04.23	-6.00%	6.00%	0.00%
606+48.70	-6.00%	6.00%	2.00%

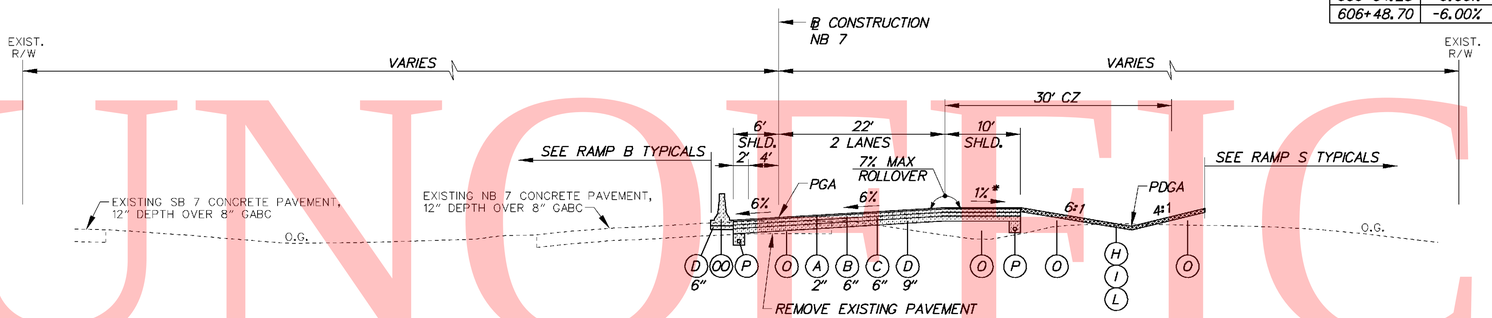

NB 7

STA. 605+69.41 TO STA. 606+48.70

*NB 7 CROSS-SLOPES			
STA.	LT. SHLD.	LANES	RT. SHLD.
603+00	-	3.81%	-3.19%
603+07.70	-	4.00%	-3.00%
603+50	-	5.06%	-1.94%
603+87.70	-	6.00%	-1.00%

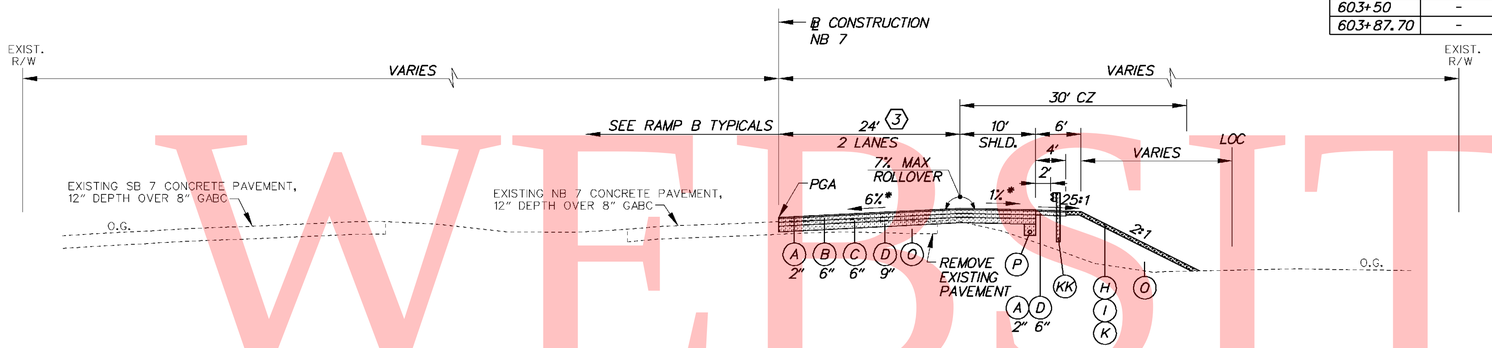

NB 7

STA. 602+83.58 TO STA. 605+69.41

(3) STA. 603+70.97 TO STA. 605+69.41
WIDTH TAPERS 24' TO 22'

*NB 7 CROSS-SLOPES			
STA.	LT. SHLD.	LANES	RT. SHLD.
600+67.70	-	-2.00%	-4.00%
600+97.78	-	-1.25%	-4.00%
601+00	-	-1.19%	-4.00%
601+47.70	-	0.00%	-4.00%
601+50	-	0.06%	-4.00%
602+00	-	1.31%	-4.00%
602+27.70	-	2.00%	-4.00%
602+50	-	2.56%	-4.00%
602+67.70	-	3.00%	-4.00%

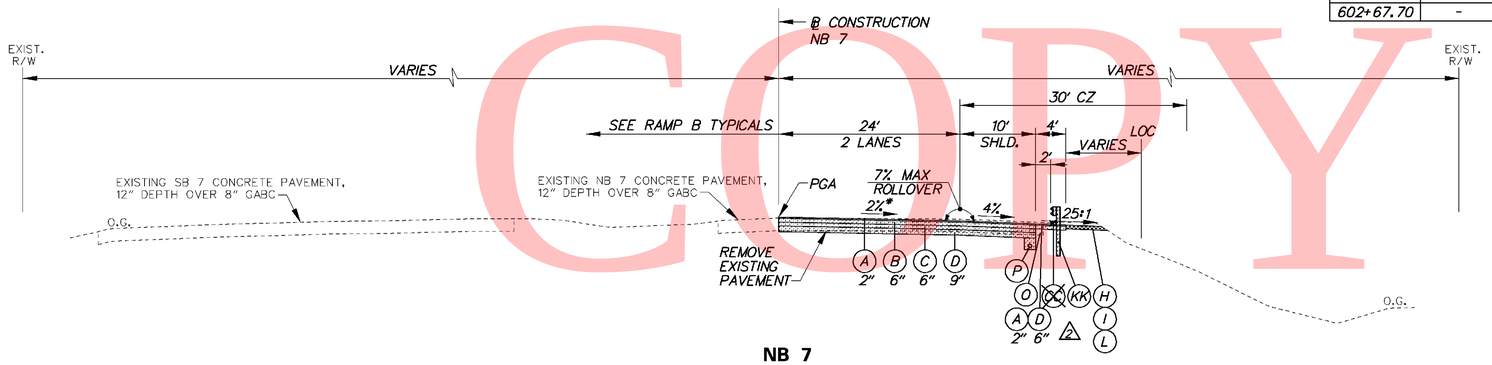

NB 7

STA. 598+63.13 TO STA. 602+83.58

LEGEND

- (A) ITEM 401708 - SUPERPAVE, TYPE C HOT-MIX, 160 GYRATIONS, PG 70-22 (NON-CARBONATE STONE)
- (B) ITEM 401654 - SUPERPAVE, TYPE B HOT-MIX, 160 GYRATIONS, PG 70-22
- (C) ITEM 401663 - SUPERPAVE, BITUMINOUS CONCRETE BASE COURSE, 160 GYRATIONS, PG 64-22
- (D) ITEM 302007 - GRADED AGGREGATE BASE COURSE, TYPE B
- (E) ITEM 401711 - SUPERPAVE, TYPE C HOT-MIX, 160 GYRATIONS, PG 76-22 (NON-CARBONATE STONE)
- (F) ITEM 401660 - SUPERPAVE, TYPE B HOT-MIX, 160 GYRATIONS, PG 76-22
- (G) ITEM 501006 - PORTLAND CEMENT CONCRETE PAVEMENT, 12"
- (H) ITEM 732002 - TOPSOIL, 6" DEPTH
- (I) ITEM 734013 - PERMANENT GRASS SEEDING, DRY GROUND
- (J) ITEM 602017 - PCC MASONRY, PARAPET, CLASS A
- (K) ITEM 735533 - SOIL RETENTION BLANKET MULCH, TYPE 3
- (L) ITEM 735534 - SOIL RETENTION BLANKET MULCH, TYPE 4
- (M) ITEM 735535 - SOIL RETENTION BLANKET MULCH, TYPE 5, UNLESS OTHERWISE NOTED, SEE DRAINAGE PLANS FOR LIMITS AND TYPE
- (N) ITEM 209001 - BORROW, TYPE A
- (O) ITEM 209006 - BORROW, TYPE F OR APPROVED PROJECT EXCAVATION
- (P) ITEM 715001 - PERFORATED PIPE UNDERDRAINS, 6"
- (Q) ITEM 760504 - RUMBLE STRIPS, HOT-MIX
- (R) ITEM 602772 - MECHANICALLY STABILIZED EARTH WALLS
- (S) ITEM 602773 - PCC MASONRY FOR MECHANICALLY STABILIZED EARTH WALLS
- (T) ITEM ~~720512~~ 720529 - PCC SAFETY BARRIER PERMANENT, SINGLE FACE
- (U) ITEM 720654 - PCC SAFETY BARRIER PERMANENT, SINGLE FACE, MODIFIED TYPE 1
- (V) ITEM 720587 - PCC SAFETY BARRIER PERMANENT, DOUBLE FACE, MODIFIED
- (W) ITEM 720655 - PCC SAFETY BARRIER PERMANENT, SINGLE FACE, MODIFIED TYPE 2
- (X) ITEM 712005 - RIPRAP, R-4
- (Y) ITEM 401665 - SUPERPAVE, TYPE C HOT-MIX, 160 GYRATIONS, PG 64-22, PATCHING
- (Z) ITEM 401666 - SUPERPAVE, TYPE B HOT-MIX, 160 GYRATIONS, PG 64-22, PATCHING
- (AA) ITEM 401667 - SUPERPAVE, BITUMINOUS CONCRETE BASE COURSE, 160 GYRATIONS, PG 64-22, PATCHING
- (BB) ITEM 302008 - GRADED AGGREGATE BASE COURSE, TYPE B, PATCHING
- (CC) ITEM 755000 - HOT-MIX, HOT LAID, BITUMINOUS CONCRETE CURB
- (DD) ITEM 701010 - PORTLAND CEMENT CONCRETE CURB, TYPE 1
- (EE) ITEM 701011 - PORTLAND CEMENT CONCRETE CURB, TYPE 2
- (FF) ITEM 701020 - INTEGRAL PORTLAND CEMENT CONCRETE CURB AND GUTTER, TYPE 1
- (GG) ITEM 701023 - INTEGRAL PORTLAND CEMENT CONCRETE CURB AND GUTTER, TYPE 4
- (HH) ITEM 701026 - PORTLAND CEMENT CONCRETE MONOLITHIC MEDIAN
- (II) ITEM 701027 - PORTLAND CEMENT CONCRETE CURB, TYPE 1 MODIFIED
- (JJ) ITEM 720658 - PCC SAFETY BARRIER PERMANENT SINGLE FACE, MODIFIED, TYPE 5
- (KK) ITEM 720050 - GALVANIZED STEEL BEAM GUARDRAIL, TYPE 1
- (LL) ITEM 760507 - PROFILE MILLING, HOT-MIX
- (MM) ITEM 720656 - PCC SAFETY BARRIER PERMANENT, SINGLE FACE, MODIFIED, TYPE 3
- (NN) ITEM 720657 - PCC SAFETY BARRIER PERMANENT, SINGLE FACE, MODIFIED, TYPE 4
- (OO) ITEM 720651 - PCC SAFETY BARRIER PERMANENT, DOUBLE FACE, BIFURCATED, TYPE 1
- (PP) ITEM 720652 - PCC SAFETY BARRIER PERMANENT, DOUBLE FACE, BIFURCATED, TYPE 2
- (RR) ITEM 401668 - SUPERPAVE, TYPE C HOT-MIX, 160 GYRATIONS, PG 64-22, WEDGE
- (SS) ITEM 401669 - SUPERPAVE, TYPE B HOT-MIX, 160 GYRATIONS, PG 64-22, WEDGE

PAVEMENT LIFT NOTE:

THE MAXIMUM LIFTS FOR THE INDIVIDUAL PAVING MATERIAL ARE AS FOLLOWS:
SUPERPAVE, TYPE C HOT-MIX - 2"
SUPERPAVE, TYPE B HOT-MIX - 3"
SUPERPAVE, BIT. CONC. BASE COURSE - 6"
GRADED AGGREGATE BASE COURSE - 8"

NOTES:

1) THE PGA IS APPLIED TO THE TOP OF THE FINAL PAVEMENT SURFACE.

2/15/2011 11:29:01 AM
M:\PROJECTS\2003\03059_DELTRNPK\SR1MALL\CADD\2809003\PLANS\TS02_SR1.DGN

DELAWARE DEPARTMENT OF TRANSPORTATION

ADDENDUMS / REVISIONS	
ADDENDUM NO. 2 REMOVED BITUMINOUS CURB, 01/26/2011, RLS	
ADDENDUM NO. 3 CHANGED ITEM NO., 02/18/2011, RLS	

NOT TO SCALE

SR1 / I-95 INTERCHANGE

CONTRACT	BRIDGE NO.	
28-090-03	DESIGNED BY:	
COUNTY	CHECKED BY:	
NEW CASTLE		

TYPICAL SECTIONS

SHEET NO.
7
TOTAL SHTS.
803

UNOFFICIAL WEBSITE COPY

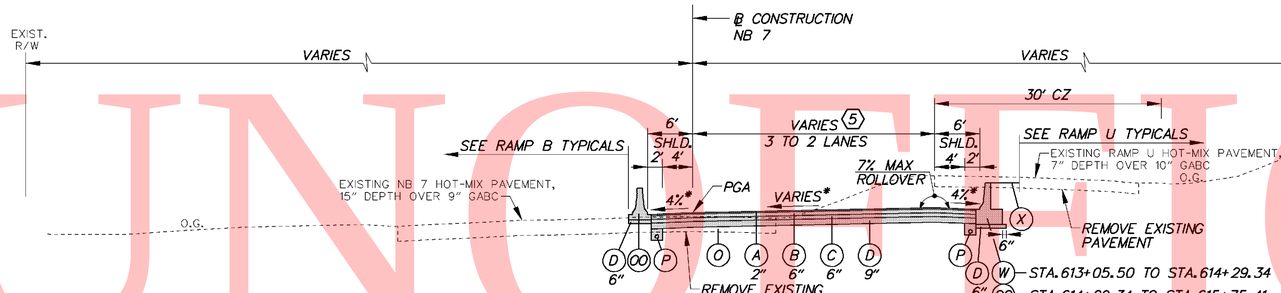

*NB 7 CROSS-SLOPES			
STA.	LT. SHLD.	LANES	RT. SHLD.
613+05.50	-4.80%	4.80%	-2.20%
613+48.17	-4.00%	4.00%	-3.00%
613+50	-4.00%	3.97%	-3.03%
613+90.83	-4.00%	3.20%	-3.80%
614+00	-4.00%	3.03%	-3.97%
614+01.50	-4.00%	3.00%	-4.00%
614+50	-4.00%	2.09%	-4.00%
614+54.83	-4.00%	2.00%	-4.00%
615+00	-4.00%	1.15%	-4.00%
615+50	-4.00%	0.22%	-4.00%
615+61.5	-4.00%	0.00%	-4.00%

NB 7

STA. 613+05.50 TO STA. 615+75.41

(5) STA. 613+50.00 TO STA. 615+75.41
WIDTH TAPERS 36' TO 26.98'

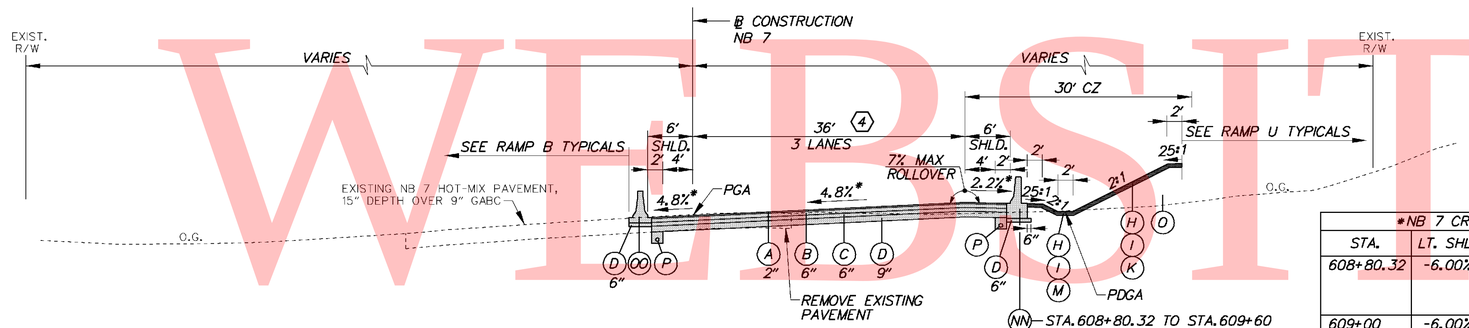

*NB 7 CROSS-SLOPES			
STA.	LT. SHLD.	LANES	RT. SHLD.
608+80.32	-6.00%	6.00% (LEFT 2) 4.00% (RIGHT 1)	-3.00%
609+00	-6.00%	6.00% (LEFT 2) 4.66% (RIGHT 1)	-2.34%
609+40.32	-6.00%	6.00%	-1.00%
611+00.94	-6.00%	6.00%	-1.00%
611+33.44	-5.40%	5.40%	-1.60%
611+50	-5.10%	5.10%	-1.90%
611+65.94	-4.80%	4.80%	-2.20%

NB 7

STA. 608+80.32 TO STA. 613+05.50

(4) STA. 609+53.44 TO STA. 611+33.44
WIDTH TAPERS 33' TO 36'

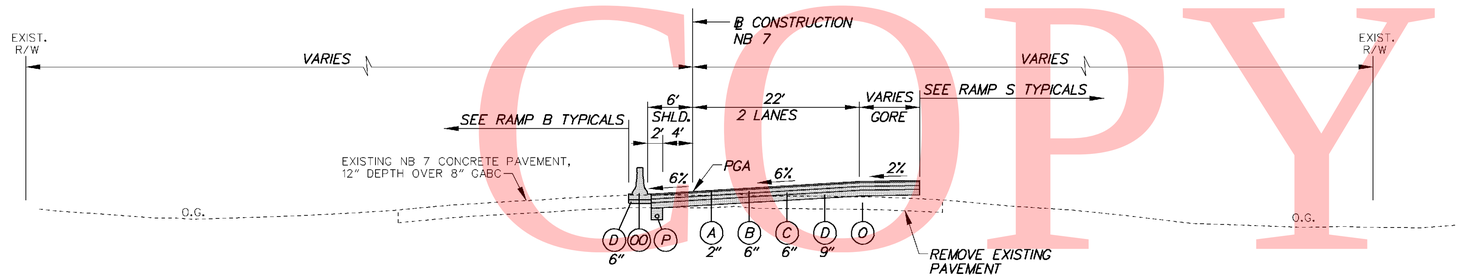

NB 7

STA. 606+48.70 TO STA. 608+80.32

LEGEND

- (A) ITEM 401708 - SUPERPAVE, TYPE C HOT-MIX, 160 GYRATIONS, PG 70-22 (NON-CARBONATE STONE)
- (B) ITEM 401654 - SUPERPAVE, TYPE B HOT-MIX, 160 GYRATIONS, PG 70-22
- (C) ITEM 401663 - SUPERPAVE, BITUMINOUS CONCRETE BASE COURSE, 160 GYRATIONS, PG 64-22
- (D) ITEM 302007 - GRADED AGGREGATE BASE COURSE, TYPE B
- (E) ITEM 401711 - SUPERPAVE, TYPE C HOT-MIX, 160 GYRATIONS, PG 76-22 (NON-CARBONATE STONE)
- (F) ITEM 401660 - SUPERPAVE, TYPE B HOT-MIX, 160 GYRATIONS, PG 76-22
- (G) ITEM 501006 - PORTLAND CEMENT CONCRETE PAVEMENT, 12"
- (H) ITEM 732002 - TOPSOIL, 6" DEPTH
- (I) ITEM 734013 - PERMANENT GRASS SEEDING, DRY GROUND
- (J) ITEM 602017 - PCC MASONRY, PARAPET, CLASS A
- (K) ITEM 735533 - SOIL RETENTION BLANKET MULCH, TYPE 3
- (L) ITEM 735534 - SOIL RETENTION BLANKET MULCH, TYPE 4
- (M) ITEM 735535 - SOIL RETENTION BLANKET MULCH, TYPE 5, UNLESS OTHERWISE NOTED, SEE DRAINAGE PLANS FOR LIMITS AND TYPE
- (N) ITEM 209001 - BORROW, TYPE A
- (O) ITEM 209006 - BORROW, TYPE F OR APPROVED PROJECT EXCAVATION
- (P) ITEM 715001 - PERFORATED PIPE UNDERDRAINS, 6"
- (Q) ITEM 760504 - RUMBLE STRIPS, HOT-MIX
- (R) ITEM 602772 - MECHANICALLY STABILIZED EARTH WALLS
- (S) ITEM 602773 - PCC MASONRY FOR MECHANICALLY STABILIZED EARTH WALLS
- (T) ITEM ~~720512~~ 3 720529 - PCC SAFETY BARRIER PERMANENT, SINGLE FACE
- (U) ITEM 720654 - PCC SAFETY BARRIER PERMANENT, SINGLE FACE, MODIFIED TYPE 1
- (V) ITEM 720587 - PCC SAFETY BARRIER PERMANENT, DOUBLE FACE, MODIFIED
- (W) ITEM 720655 - PCC SAFETY BARRIER PERMANENT, SINGLE FACE, MODIFIED TYPE 2
- (X) ITEM 712005 - RIPRAP, R-4
- (Y) ITEM 401665 - SUPERPAVE, TYPE C HOT-MIX, 160 GYRATIONS, PG 64-22, PATCHING
- (Z) ITEM 401666 - SUPERPAVE, TYPE B HOT-MIX, 160 GYRATIONS, PG 64-22, PATCHING
- (AA) ITEM 401667 - SUPERPAVE, BITUMINOUS CONCRETE BASE COURSE, 160 GYRATIONS, PG 64-22, PATCHING
- (BB) ITEM 302008 - GRADED AGGREGATE BASE COURSE, TYPE B, PATCHING
- (CC) ITEM 755000 - HOT-MIX, HOT LAID, BITUMINOUS CONCRETE CURB
- (DD) ITEM 701010 - PORTLAND CEMENT CONCRETE CURB, TYPE 1
- (EE) ITEM 701011 - PORTLAND CEMENT CONCRETE CURB, TYPE 2
- (FF) ITEM 701020 - INTEGRAL PORTLAND CEMENT CONCRETE CURB AND GUTTER, TYPE 1
- (GG) ITEM 701023 - INTEGRAL PORTLAND CEMENT CONCRETE CURB AND GUTTER, TYPE 4
- (HH) ITEM 701026 - PORTLAND CEMENT CONCRETE MONOLITHIC MEDIAN
- (II) ITEM 701027 - PORTLAND CEMENT CONCRETE CURB, TYPE 1 MODIFIED
- (JJ) ITEM 720658 - PCC SAFETY BARRIER PERMANENT SINGLE FACE, MODIFIED, TYPE 5
- (KK) ITEM 720050 - GALVANIZED STEEL BEAM GUARDRAIL, TYPE 1
- (LL) ITEM 760507 - PROFILE MILLING, HOT-MIX
- (MM) ITEM 720656 - PCC SAFETY BARRIER PERMANENT, SINGLE FACE, MODIFIED, TYPE 3
- (NN) ITEM 720657 - PCC SAFETY BARRIER PERMANENT, SINGLE FACE, MODIFIED, TYPE 4
- (OO) ITEM 720651 - PCC SAFETY BARRIER PERMANENT, DOUBLE FACE, BIFURCATED, TYPE 1
- (PP) ITEM 720652 - PCC SAFETY BARRIER PERMANENT, DOUBLE FACE, BIFURCATED, TYPE 2
- (RR) ITEM 401668 - SUPERPAVE, TYPE C HOT-MIX, 160 GYRATIONS, PG 64-22, WEDGE
- (SS) ITEM 401669 - SUPERPAVE, TYPE B HOT-MIX, 160 GYRATIONS, PG 64-22, WEDGE

PAVEMENT LIFT NOTE:

THE MAXIMUM LIFTS FOR THE INDIVIDUAL PAVING MATERIAL ARE AS FOLLOWS:
SUPERPAVE, TYPE C HOT-MIX - 2"
SUPERPAVE, TYPE B HOT-MIX - 3"
SUPERPAVE, BIT. CONC. BASE COURSE - 6"
GRADED AGGREGATE BASE COURSE - 8"

NOTES:

1) THE PGA IS APPLIED TO THE TOP OF THE FINAL PAVEMENT SURFACE.

2/15/2011 11:36:48 AM
M:\PROJECTS\2003\03059_DELTRNPK\SR1MALL\CADD\2809003\PLANS\TS03_SR1.DGN

DELAWARE DEPARTMENT OF TRANSPORTATION	ADDENDUMS / REVISIONS	NOT TO SCALE	SR1 / I-95 INTERCHANGE	CONTRACT 28-090-03	BRIDGE NO.	TYPICAL SECTIONS	SHEET NO. 8
	ADDENDUM NO. 3 CHANGED ITEM NO., 02/18/2011, RLS			COUNTY NEW CASTLE	DESIGNED BY: CHECKED BY:		TOTAL SHTS. 803

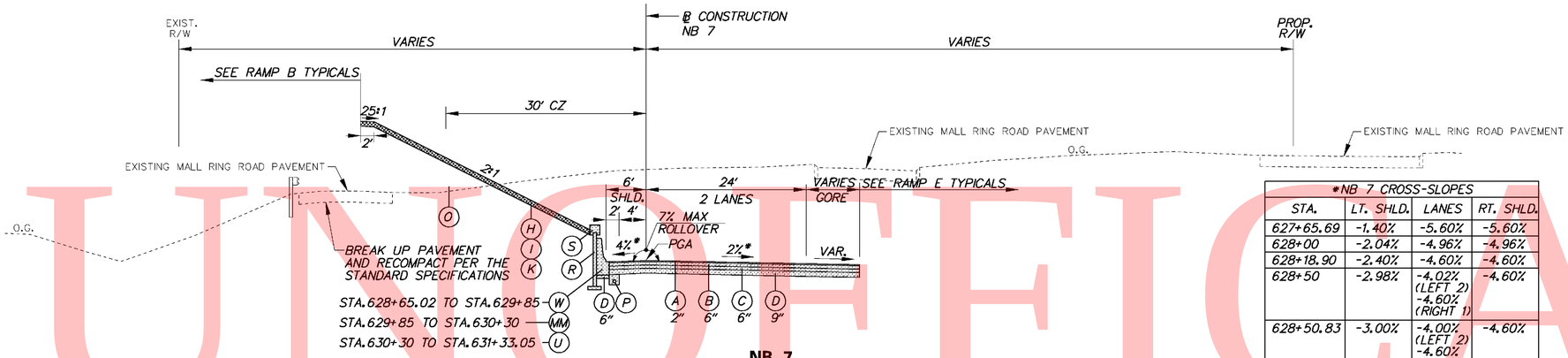

NB 7

STA. 628+65.02 TO STA. 631+33.05

*NB 7 CROSS-SLOPES

STA.	LT. SHLD.	LANES	RT. SHLD.
627+65.69	-1.40%	-5.60%	-5.60%
628+00	-2.04%	-4.96%	-4.96%
628+18.90	-2.40%	-4.60%	-4.60%
628+50	-2.98%	-4.02% (LEFT 2) -4.60% (RIGHT 1)	-4.60%
628+50.83	-3.00%	-4.00% (LEFT 2) -4.60% (RIGHT 1)	-4.60%
628+65.02	-3.27%	-3.73% (LEFT 2) -4.60% (RIGHT 1)	-4.60%
629+00	-3.92%	-3.08%	-
629+04.05	-4.00%	-3.00%	-
629+50	-4.00%	-2.14%	-
629+57.26	-4.00%	-2.00%	-

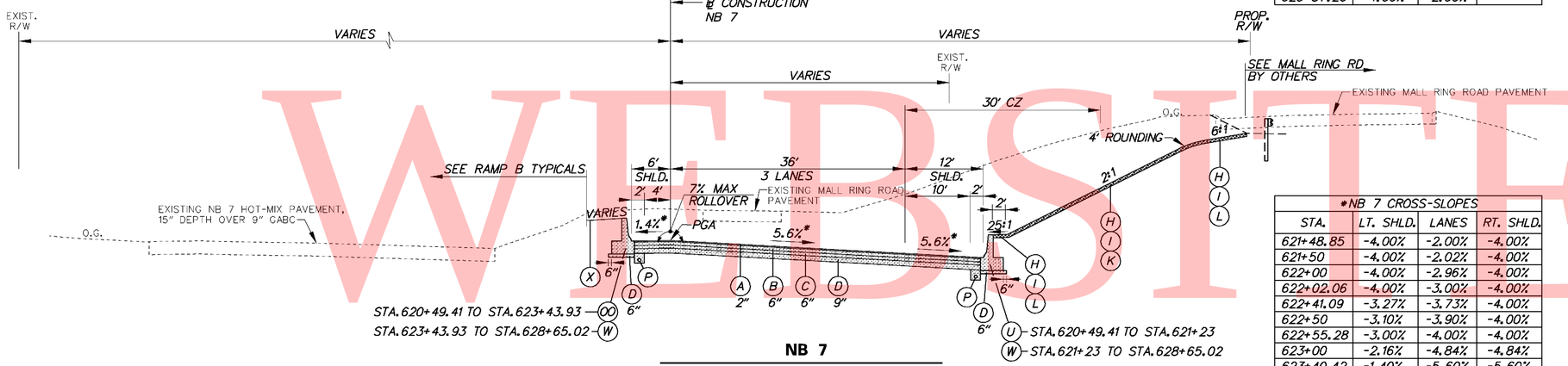

NB 7

STA. 620+49.41 TO STA. 628+65.02

*NB 7 CROSS-SLOPES

STA.	LT. SHLD.	LANES	RT. SHLD.
621+48.85	-4.00%	-2.00%	-4.00%
621+50	-4.00%	-2.02%	-4.00%
622+00	-4.00%	-2.96%	-4.00%
622+02.06	-4.00%	-3.00%	-4.00%
622+41.09	-3.27%	-3.73%	-4.00%
622+50	-3.10%	-3.90%	-4.00%
622+55.28	-3.00%	-4.00%	-4.00%
623+00	-2.16%	-4.84%	-4.84%
623+40.42	-1.40%	-5.60%	-5.60%

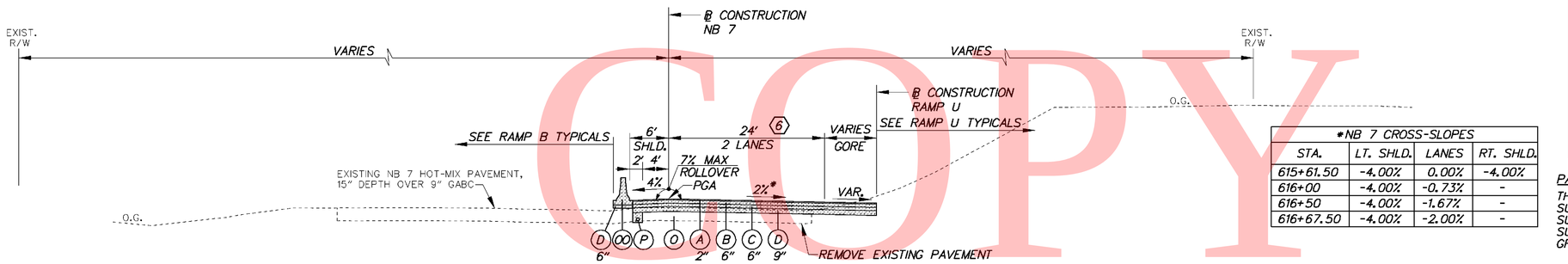

NB 7

STA. 615+75.41 TO STA. 620+49.41

(6) STA. 615+75.41 TO STA. 616+50.00
WIDTH TAPERS 26.98' TO 24'

*NB 7 CROSS-SLOPES

STA.	LT. SHLD.	LANES	RT. SHLD.
615+61.50	-4.00%	0.00%	-4.00%
616+00	-4.00%	-0.73%	-
616+50	-4.00%	-1.67%	-
616+67.50	-4.00%	-2.00%	-

LEGEND

- (A) ITEM 401708 - SUPERPAVE, TYPE C HOT-MIX, 160 GYRATIONS, PG 70-22 (NON-CARBONATE STONE)
- (B) ITEM 401654 - SUPERPAVE, TYPE B HOT-MIX, 160 GYRATIONS, PG 70-22
- (C) ITEM 401663 - SUPERPAVE, BITUMINOUS CONCRETE BASE COURSE, 160 GYRATIONS, PG 64-22
- (D) ITEM 302007 - GRADED AGGREGATE BASE COURSE, TYPE B
- (E) ITEM 401711 - SUPERPAVE, TYPE C HOT-MIX, 160 GYRATIONS, PG 76-22 (NON-CARBONATE STONE)
- (F) ITEM 401660 - SUPERPAVE, TYPE B HOT-MIX, 160 GYRATIONS, PG 76-22
- (G) ITEM 501006 - PORTLAND CEMENT CONCRETE PAVEMENT, 12"
- (H) ITEM 732002 - TOPSOIL, 6" DEPTH
- (I) ITEM 734013 - PERMANENT GRASS SEEDING, DRY GROUND
- (J) ITEM 602017 - PCC MASONRY, PARAPET, CLASS A
- (K) ITEM 735533 - SOIL RETENTION BLANKET MULCH, TYPE 3
- (L) ITEM 735534 - SOIL RETENTION BLANKET MULCH, TYPE 4
- (M) ITEM 735535 - SOIL RETENTION BLANKET MULCH, TYPE 5, UNLESS OTHERWISE NOTED, SEE DRAINAGE PLANS FOR LIMITS AND TYPE
- (N) ITEM 209001 - BORROW, TYPE A
- (O) ITEM 209006 - BORROW, TYPE F OR APPROVED PROJECT EXCAVATION
- (P) ITEM 715001 - PERFORATED PIPE UNDERDRAINS, 6"
- (Q) ITEM 760504 - RUMBLE STRIPS, HOT-MIX
- (R) ITEM 602772 - MECHANICALLY STABILIZED EARTH WALLS
- (S) ITEM 602773 - PCC MASONRY FOR MECHANICALLY STABILIZED EARTH WALLS
- (T) ITEM ~~720512~~ 720529 (3) - PCC SAFETY BARRIER PERMANENT, SINGLE FACE
- (U) ITEM 720654 - PCC SAFETY BARRIER PERMANENT, SINGLE FACE, MODIFIED TYPE 1
- (V) ITEM 720587 - PCC SAFETY BARRIER PERMANENT, DOUBLE FACE, MODIFIED
- (W) ITEM 720655 - PCC SAFETY BARRIER PERMANENT, SINGLE FACE, MODIFIED TYPE 2
- (X) ITEM 712005 - RIPRAP, R-4
- (Y) ITEM 401665 - SUPERPAVE, TYPE C HOT-MIX, 160 GYRATIONS, PG 64-22, PATCHING
- (Z) ITEM 401666 - SUPERPAVE, TYPE B HOT-MIX, 160 GYRATIONS, PG 64-22, PATCHING
- (AA) ITEM 401667 - SUPERPAVE, BITUMINOUS CONCRETE BASE COURSE, 160 GYRATIONS, PG 64-22, PATCHING
- (BB) ITEM 302008 - GRADED AGGREGATE BASE COURSE, TYPE B, PATCHING
- (CC) ITEM 755000 - HOT-MIX, HOT LAID, BITUMINOUS CONCRETE CURB
- (DD) ITEM 701010 - PORTLAND CEMENT CONCRETE CURB, TYPE 1
- (EE) ITEM 701011 - PORTLAND CEMENT CONCRETE CURB, TYPE 2
- (FF) ITEM 701020 - INTEGRAL PORTLAND CEMENT CONCRETE CURB AND GUTTER, TYPE 1
- (GG) ITEM 701023 - INTEGRAL PORTLAND CEMENT CONCRETE CURB AND GUTTER, TYPE 4
- (HH) ITEM 701026 - PORTLAND CEMENT CONCRETE MONOLITHIC MEDIAN
- (II) ITEM 701027 - PORTLAND CEMENT CONCRETE CURB, TYPE 1 MODIFIED
- (JJ) ITEM 720658 - PCC SAFETY BARRIER PERMANENT SINGLE FACE, MODIFIED, TYPE 5
- (KK) ITEM 720050 - GALVANIZED STEEL BEAM GUARDRAIL, TYPE 1
- (LL) ITEM 760507 - PROFILE MILLING, HOT-MIX
- (MM) ITEM 720656 - PCC SAFETY BARRIER PERMANENT, SINGLE FACE, MODIFIED, TYPE 3
- (NN) ITEM 720657 - PCC SAFETY BARRIER PERMANENT, SINGLE FACE, MODIFIED, TYPE 4
- (OO) ITEM 720651 - PCC SAFETY BARRIER PERMANENT, DOUBLE FACE, BIFURCATED, TYPE 1
- (PP) ITEM 720652 - PCC SAFETY BARRIER PERMANENT, DOUBLE FACE, BIFURCATED, TYPE 2
- (RR) ITEM 401668 - SUPERPAVE, TYPE C HOT-MIX, 160 GYRATIONS, PG 64-22, WEDGE
- (SS) ITEM 401669 - SUPERPAVE, TYPE B HOT-MIX, 160 GYRATIONS, PG 64-22, WEDGE

PAVEMENT LIFT NOTE:

THE MAXIMUM LIFTS FOR THE INDIVIDUAL PAVING MATERIAL ARE AS FOLLOWS:
SUPERPAVE, TYPE C HOT-MIX - 2"
SUPERPAVE, TYPE B HOT-MIX - 3"
SUPERPAVE, BIT. CONC. BASE COURSE - 6"
GRADED AGGREGATE BASE COURSE - 8"

NOTES:

1) THE PGA IS APPLIED TO THE TOP OF THE FINAL PAVEMENT SURFACE.

UNOFFICIAL WEBSITE COPY

DELAWARE DEPARTMENT OF TRANSPORTATION	ADDENDUMS / REVISIONS	NOT TO SCALE	SR1 / I-95 INTERCHANGE	CONTRACT 28-090-03	BRIDGE NO.	TYPICAL SECTIONS	SHEET NO. 9
	ADDENDUM NO. (3) CHANGED ITEM NO., 02/18/2011, RLS			COUNTY NEW CASTLE	DESIGNED BY:		TOTAL SHTS. 803
					CHECKED BY:		

2/15/2011 11:38:30 AM
M:\PROJECTS\2003\03059_DELTRNPK\SR1MALL\CADD\2809003\PLANS\TS04_SR1.DGN

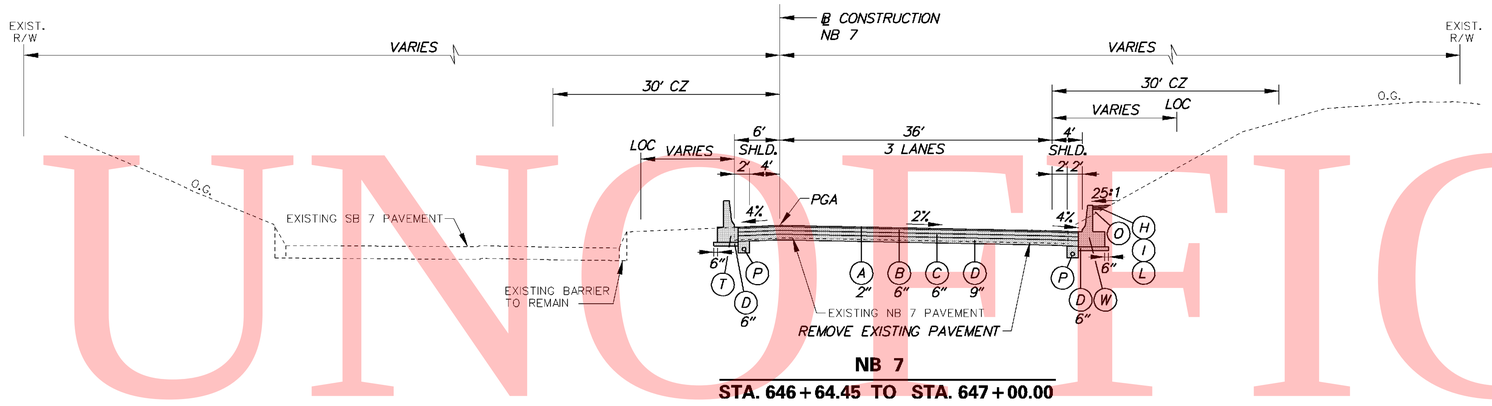

NB 7

STA. 646+64.45 TO STA. 647+00.00

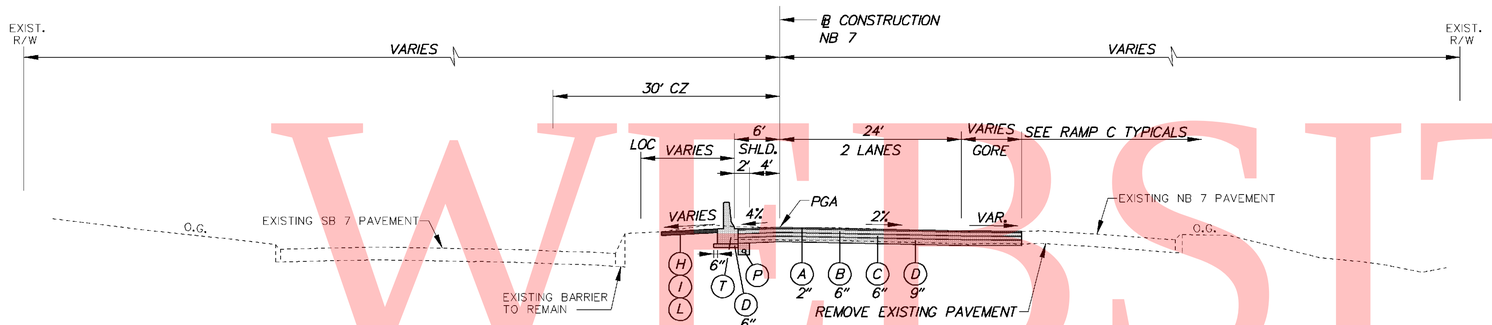

NB 7

STA. 644+74.32 TO STA. 646+64.45

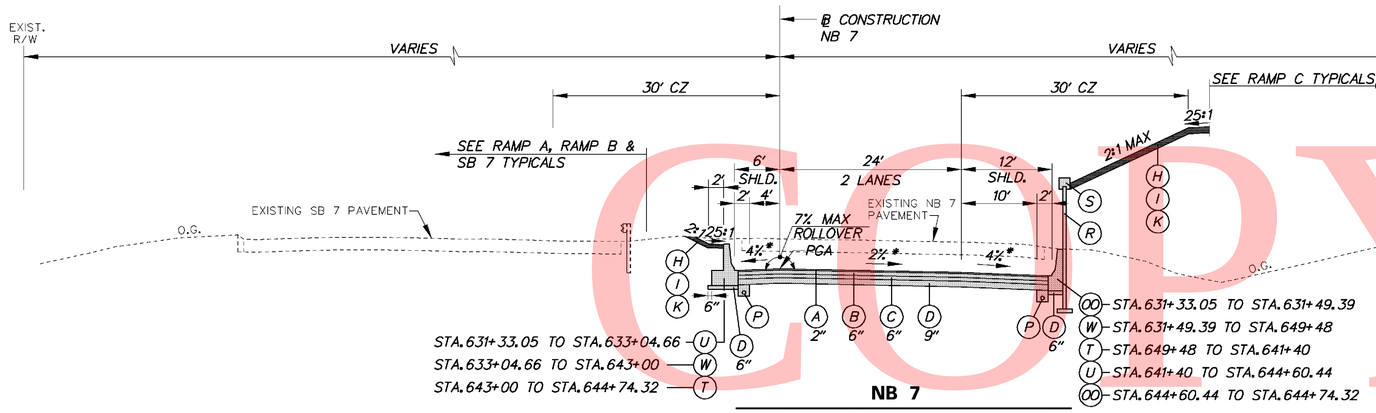

NB 7

STA. 631+33.05 TO STA. 644+74.32

LEGEND

- (A) ITEM 401708 - SUPERPAVE, TYPE C HOT-MIX, 160 GYRATIONS, PG 70-22 (NON-CARBONATE STONE)
- (B) ITEM 401654 - SUPERPAVE, TYPE B HOT-MIX, 160 GYRATIONS, PG 70-22
- (C) ITEM 401663 - SUPERPAVE, BITUMINOUS CONCRETE BASE COURSE, 160 GYRATIONS, PG 64-22
- (D) ITEM 302007 - GRADED AGGREGATE BASE COURSE, TYPE B
- (E) ITEM 401711 - SUPERPAVE, TYPE C HOT-MIX, 160 GYRATIONS, PG 76-22 (NON-CARBONATE STONE)
- (F) ITEM 401660 - SUPERPAVE, TYPE B HOT-MIX, 160 GYRATIONS, PG 76-22
- (G) ITEM 501006 - PORTLAND CEMENT CONCRETE PAVEMENT, 12"
- (H) ITEM 732002 - TOPSOIL, 6" DEPTH
- (I) ITEM 734013 - PERMANENT GRASS SEEDING, DRY GROUND
- (J) ITEM 602017 - PCC MASONRY, PARAPET, CLASS A
- (K) ITEM 735533 - SOIL RETENTION BLANKET MULCH, TYPE 3
- (L) ITEM 735534 - SOIL RETENTION BLANKET MULCH, TYPE 4
- (M) ITEM 735535 - SOIL RETENTION BLANKET MULCH, TYPE 5, UNLESS OTHERWISE NOTED, SEE DRAINAGE PLANS FOR LIMITS AND TYPE
- (N) ITEM 209001 - BORROW, TYPE A
- (O) ITEM 209006 - BORROW, TYPE F OR APPROVED PROJECT EXCAVATION
- (P) ITEM 715001 - PERFORATED PIPE UNDERDRAINS, 6"
- (Q) ITEM 760504 - RUMBLE STRIPS, HOT-MIX
- (R) ITEM 602772 - MECHANICALLY STABILIZED EARTH WALLS
- (S) ITEM 602773 - PCC MASONRY FOR MECHANICALLY STABILIZED EARTH WALLS
- (T) ITEM ~~720512~~ 3 720529 - PCC SAFETY BARRIER PERMANENT, SINGLE FACE
- (U) ITEM 720654 - PCC SAFETY BARRIER PERMANENT, SINGLE FACE, MODIFIED TYPE 1
- (V) ITEM 720587 - PCC SAFETY BARRIER PERMANENT, DOUBLE FACE, MODIFIED
- (W) ITEM 720655 - PCC SAFETY BARRIER PERMANENT, SINGLE FACE, MODIFIED TYPE 2
- (X) ITEM 712005 - RIPRAP, R-4
- (Y) ITEM 401665 - SUPERPAVE, TYPE C HOT-MIX, 160 GYRATIONS, PG 64-22, PATCHING
- (Z) ITEM 401666 - SUPERPAVE, TYPE B HOT-MIX, 160 GYRATIONS, PG 64-22, PATCHING
- (AA) ITEM 401667 - SUPERPAVE, BITUMINOUS CONCRETE BASE COURSE, 160 GYRATIONS, PG 64-22, PATCHING
- (BB) ITEM 302008 - GRADED AGGREGATE BASE COURSE, TYPE B, PATCHING
- (CC) ITEM 755000 - HOT-MIX, HOT LAID, BITUMINOUS CONCRETE CURB
- (DD) ITEM 701010 - PORTLAND CEMENT CONCRETE CURB, TYPE 1
- (EE) ITEM 701011 - PORTLAND CEMENT CONCRETE CURB, TYPE 2
- (FF) ITEM 701020 - INTEGRAL PORTLAND CEMENT CONCRETE CURB AND GUTTER, TYPE 1
- (GG) ITEM 701023 - INTEGRAL PORTLAND CEMENT CONCRETE CURB AND GUTTER, TYPE 4
- (HH) ITEM 701026 - PORTLAND CEMENT CONCRETE MONOLITHIC MEDIAN
- (II) ITEM 701027 - PORTLAND CEMENT CONCRETE CURB, TYPE 1 MODIFIED
- (JJ) ITEM 720658 - PCC SAFETY BARRIER PERMANENT SINGLE FACE, MODIFIED, TYPE 5
- (KK) ITEM 720050 - GALVANIZED STEEL BEAM GUARDRAIL, TYPE 1
- (LL) ITEM 760507 - PROFILE MILLING, HOT-MIX
- (MM) ITEM 720656 - PCC SAFETY BARRIER PERMANENT, SINGLE FACE, MODIFIED, TYPE 3
- (NN) ITEM 720657 - PCC SAFETY BARRIER PERMANENT, SINGLE FACE, MODIFIED, TYPE 4
- (OO) ITEM 720651 - PCC SAFETY BARRIER PERMANENT, DOUBLE FACE, BIFURCATED, TYPE 1
- (PP) ITEM 720652 - PCC SAFETY BARRIER PERMANENT, DOUBLE FACE, BIFURCATED, TYPE 2
- (RR) ITEM 401668 - SUPERPAVE, TYPE C HOT-MIX, 160 GYRATIONS, PG 64-22, WEDGE
- (SS) ITEM 401669 - SUPERPAVE, TYPE B HOT-MIX, 160 GYRATIONS, PG 64-22, WEDGE

*NB 7 CROSS-SLOPES			
STA.	LT. SHLD.	LANES	RT. SHLD.
633+87.70	-4.00%	-2.00%	-4.00%
634+00	-4.00%	-2.31%	-4.00%
634+27.80	-4.00%	-3.00%	-4.00%
634+46.51	-3.53%	-3.47%	-4.00%
634+50	-3.45%	-3.55%	-4.00%
634+67.90	-3.00%	-4.00%	-4.00%
635+00	-2.20%	-4.80%	-4.80%
635+16.01	-1.80%	-5.20%	-5.20%
639+30.72	-1.80%	-5.20%	-5.20%
639+50	-2.28%	-4.72%	-4.72%
639+78.72	-3.00%	-4.00%	-4.00%
639+94.72	-3.40%	-3.60%	-4.00%
640+00	-3.53%	-3.47%	-4.00%
640+18.72	-4.00%	-3.00%	-4.00%
640+50	-4.00%	-2.22%	-4.00%
640+58.72	-4.00%	-2.00%	-4.00%
643+91.03	-4.00%	-2.00%	-4.00%
644+00	-4.00%	-2.00%	-3.64%
644+50	-4.00%	-2.00%	-1.64%
644+74.28	-4.00%	-2.00%	-0.67%

PAVEMENT LIFT NOTE:

THE MAXIMUM LIFTS FOR THE INDIVIDUAL PAVING MATERIAL ARE AS FOLLOWS:
SUPERPAVE, TYPE C HOT-MIX - 2"
SUPERPAVE, TYPE B HOT-MIX - 3"
SUPERPAVE, BIT. CONC. BASE COURSE - 6"
GRADED AGGREGATE BASE COURSE - 8"

NOTES:

1) THE PGA IS APPLIED TO THE TOP OF THE FINAL PAVEMENT SURFACE.

UNOFFICIAL WEBSITE COPY

2/15/2011 11:39:45 AM
M:\PROJECTS\2003\03059_DELTRNPK\SRIMALL\CADD\2809003\PLANS\TS05_SR1.DGN

DELAWARE DEPARTMENT OF TRANSPORTATION	ADDENDUMS / REVISIONS	NOT TO SCALE	SR1 / I-95 INTERCHANGE	CONTRACT 28-090-03	BRIDGE NO.	TYPICAL SECTIONS	SHEET NO. 10
	ADDENDUM NO. 3 CHANGED ITEM NO., 02/18/2011, RLS			COUNTY NEW CASTLE	DESIGNED BY:		TOTAL SHTS. 803
					CHECKED BY:		

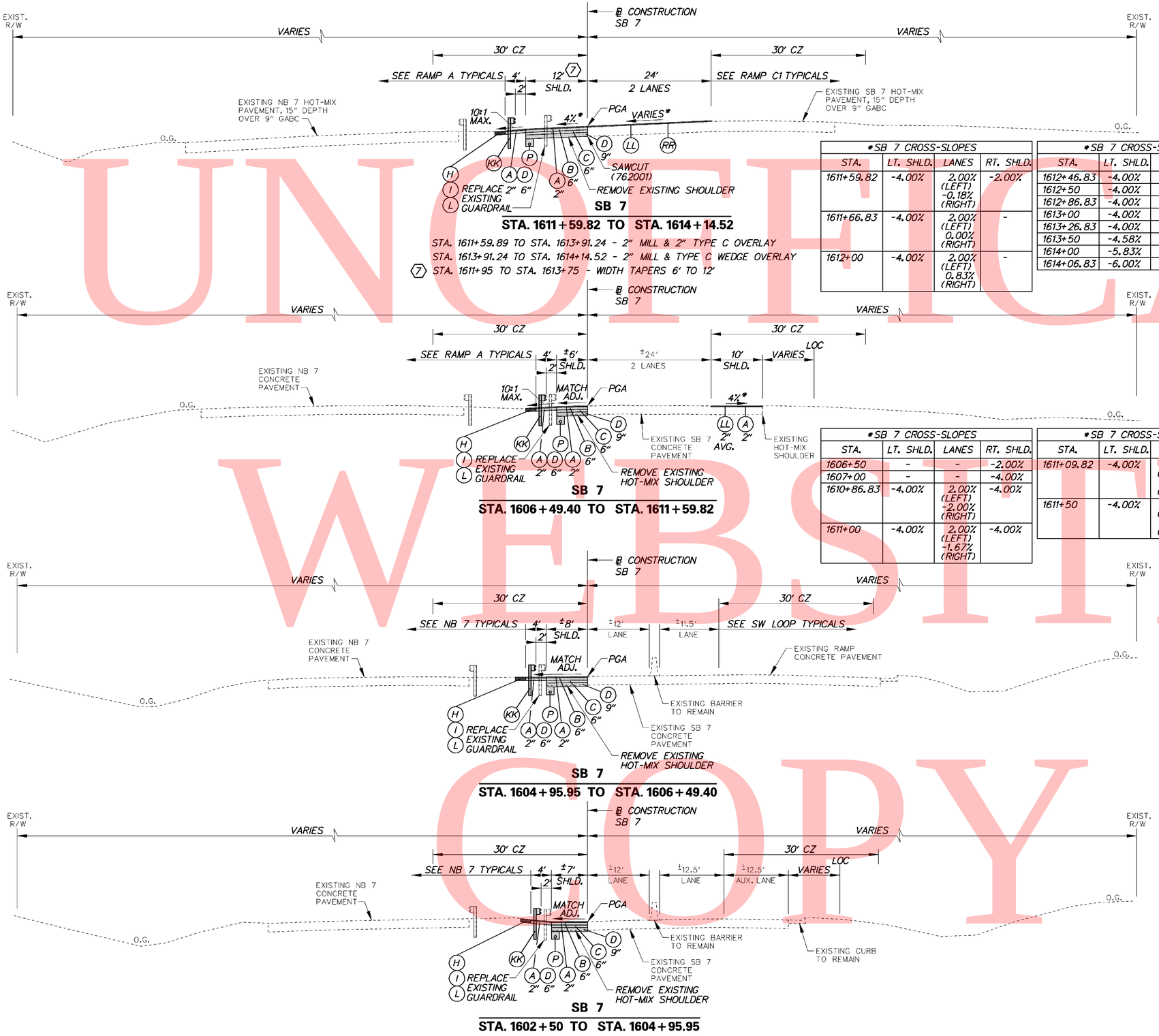

*SB 7 CROSS-SLOPES			
STA.	LT. SHLD.	LANES	RT. SHLD.
1611+59.82	-4.00%	2.00% (LEFT) -0.18% (RIGHT)	-2.00%
1611+66.83	-4.00%	2.00% (LEFT) 0.00% (RIGHT)	-
1612+00	-4.00%	2.00% (LEFT) 0.83% (RIGHT)	-

*SB 7 CROSS-SLOPES			
STA.	LT. SHLD.	LANES	RT. SHLD.
1612+46.83	-4.00%	2.00%	-
1612+50	-4.00%	2.08%	-
1612+86.83	-4.00%	3.00%	-
1613+00	-4.00%	3.33%	-
1613+26.83	-4.00%	4.00%	-
1613+50	-4.58%	4.58%	-
1614+00	-5.83%	5.83%	-
1614+06.83	-6.00%	6.00%	-

*SB 7 CROSS-SLOPES			
STA.	LT. SHLD.	LANES	RT. SHLD.
1606+50	-	-	-2.00%
1607+00	-	-	-4.00%
1610+86.83	-4.00%	2.00% (LEFT) -2.00% (RIGHT)	-4.00%
1611+00	-4.00%	2.00% (LEFT) -1.67% (RIGHT)	-4.00%

*SB 7 CROSS-SLOPES			
STA.	LT. SHLD.	LANES	RT. SHLD.
1611+09.82	-4.00%	2.00% (LEFT) -1.43% (RIGHT)	-4.00%
1611+50	-4.00%	2.00% (LEFT) -0.42% (RIGHT)	-2.39%

LEGEND

- (A) ITEM 401708 - SUPERPAVE, TYPE C HOT-MIX, 160 GYRATIONS, PG 70-22 (NON-CARBONATE STONE)
- (B) ITEM 401654 - SUPERPAVE, TYPE B HOT-MIX, 160 GYRATIONS, PG 70-22
- (C) ITEM 401663 - SUPERPAVE, BITUMINOUS CONCRETE BASE COURSE, 160 GYRATIONS, PG 64-22
- (D) ITEM 302007 - GRADED AGGREGATE BASE COURSE, TYPE B
- (E) ITEM 401711 - SUPERPAVE, TYPE C HOT-MIX, 160 GYRATIONS, PG 76-22 (NON-CARBONATE STONE)
- (F) ITEM 401660 - SUPERPAVE, TYPE B HOT-MIX, 160 GYRATIONS, PG 76-22
- (G) ITEM 501006 - PORTLAND CEMENT CONCRETE PAVEMENT, 12"
- (H) ITEM 732002 - TOPSOIL, 6" DEPTH
- (I) ITEM 734013 - PERMANENT GRASS SEEDING, DRY GROUND
- (J) ITEM 602017 - PCC MASONRY, PARAPET, CLASS A
- (K) ITEM 735533 - SOIL RETENTION BLANKET MULCH, TYPE 3
- (L) ITEM 735534 - SOIL RETENTION BLANKET MULCH, TYPE 4
- (M) ITEM 735535 - SOIL RETENTION BLANKET MULCH, TYPE 5, UNLESS OTHERWISE NOTED, SEE DRAINAGE PLANS FOR LIMITS AND TYPE
- (N) ITEM 209001 - BORROW, TYPE A
- (O) ITEM 209006 - BORROW, TYPE F OR APPROVED PROJECT EXCAVATION
- (P) ITEM 715001 - PERFORATED PIPE UNDERDRAINS, 6"
- (Q) ITEM 760504 - RUMBLE STRIPS, HOT-MIX
- (R) ITEM 602772 - MECHANICALLY STABILIZED EARTH WALLS
- (S) ITEM 602773 - PCC MASONRY FOR MECHANICALLY STABILIZED EARTH WALLS
- (T) ITEM ~~720512~~ 3 720529 - PCC SAFETY BARRIER PERMANENT, SINGLE FACE
- (U) ITEM 720654 - PCC SAFETY BARRIER PERMANENT, SINGLE FACE, MODIFIED TYPE 1
- (V) ITEM 720587 - PCC SAFETY BARRIER PERMANENT, DOUBLE FACE, MODIFIED
- (W) ITEM 720655 - PCC SAFETY BARRIER PERMANENT, SINGLE FACE, MODIFIED TYPE 2
- (X) ITEM 712005 - RIPRAP, R-4
- (Y) ITEM 401665 - SUPERPAVE, TYPE C HOT-MIX, 160 GYRATIONS, PG 64-22, PATCHING
- (Z) ITEM 401666 - SUPERPAVE, TYPE B HOT-MIX, 160 GYRATIONS, PG 64-22, PATCHING
- (AA) ITEM 401667 - SUPERPAVE, BITUMINOUS CONCRETE BASE COURSE, 160 GYRATIONS, PG 64-22, PATCHING
- (BB) ITEM 302008 - GRADED AGGREGATE BASE COURSE, TYPE B, PATCHING
- (CC) ITEM 755000 - HOT-MIX, HOT LAID, BITUMINOUS CONCRETE CURB
- (DD) ITEM 701010 - PORTLAND CEMENT CONCRETE CURB, TYPE 1
- (EE) ITEM 701011 - PORTLAND CEMENT CONCRETE CURB, TYPE 2
- (FF) ITEM 701020 - INTEGRAL PORTLAND CEMENT CONCRETE CURB AND GUTTER, TYPE 1
- (GG) ITEM 701023 - INTEGRAL PORTLAND CEMENT CONCRETE CURB AND GUTTER, TYPE 4
- (HH) ITEM 701026 - PORTLAND CEMENT CONCRETE MONOLITHIC MEDIAN
- (II) ITEM 701027 - PORTLAND CEMENT CONCRETE CURB, TYPE 1 MODIFIED
- (JJ) ITEM 720658 - PCC SAFETY BARRIER PERMANENT SINGLE FACE, MODIFIED, TYPE 5
- (KK) ITEM 720050 - GALVANIZED STEEL BEAM GUARDRAIL, TYPE 1
- (LL) ITEM 760507 - PROFILE MILLING, HOT-MIX
- (MM) ITEM 720656 - PCC SAFETY BARRIER PERMANENT, SINGLE FACE, MODIFIED, TYPE 3
- (NN) ITEM 720657 - PCC SAFETY BARRIER PERMANENT, SINGLE FACE, MODIFIED, TYPE 4
- (OO) ITEM 720651 - PCC SAFETY BARRIER PERMANENT, DOUBLE FACE, BIFURCATED, TYPE 1
- (PP) ITEM 720652 - PCC SAFETY BARRIER PERMANENT, DOUBLE FACE, BIFURCATED, TYPE 2
- (RR) ITEM 401668 - SUPERPAVE, TYPE C HOT-MIX, 160 GYRATIONS, PG 64-22, WEDGE
- (SS) ITEM 401669 - SUPERPAVE, TYPE B HOT-MIX, 160 GYRATIONS, PG 64-22, WEDGE

PAVEMENT LIFT NOTE:

THE MAXIMUM LIFTS FOR THE INDIVIDUAL PAVING MATERIAL ARE AS FOLLOWS:
SUPERPAVE, TYPE C HOT-MIX - 2"
SUPERPAVE, TYPE B HOT-MIX - 3"
SUPERPAVE, BIT. CONC. BASE COURSE - 6"
GRADED AGGREGATE BASE COURSE - 8"

NOTES:

1) THE PGA IS APPLIED TO THE TOP OF THE FINAL PAVEMENT SURFACE.

UNOFFICIAL WEBSITE COPY

2/15/2011 11:40:52 AM
M:\PROJECTS\2003\03059_DELTRNPK\SRIMALL\CADD\2809003\PLANS\TS06_SR1.DGN

DELAWARE DEPARTMENT OF TRANSPORTATION	ADDENDUMS / REVISIONS	NOT TO SCALE	SR1 / I-95 INTERCHANGE	CONTRACT 28-090-03	BRIDGE NO.	TYPICAL SECTIONS	SHEET NO. 11
	ADDENDUM NO. 3 CHANGED ITEM NO., 02/18/2011, RLS			COUNTY NEW CASTLE	DESIGNED BY:		TOTAL SHTS. 803
					CHECKED BY:		

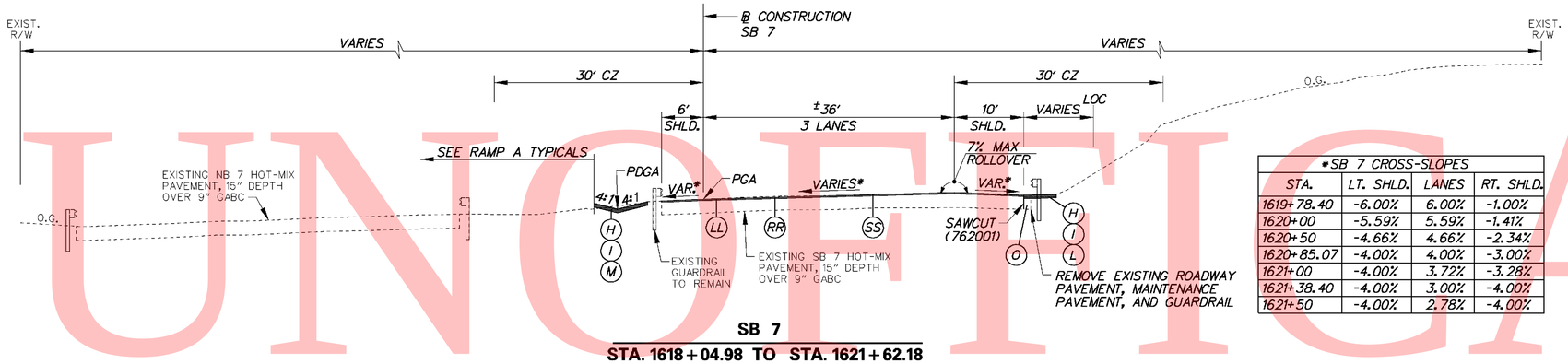

SB 7

STA. 1618+04.98 TO STA. 1621+62.18

*SB 7 CROSS-SLOPES

STA.	LT. SHLD.	LANES	RT. SHLD.
1619+78.40	-6.00%	6.00%	-1.00%
1620+00	-5.59%	5.59%	-1.41%
1620+50	-4.66%	4.66%	-2.34%
1620+85.07	-4.00%	4.00%	-3.00%
1621+00	-4.00%	3.72%	-3.28%
1621+38.40	-4.00%	3.00%	-4.00%
1621+50	-4.00%	2.78%	-4.00%

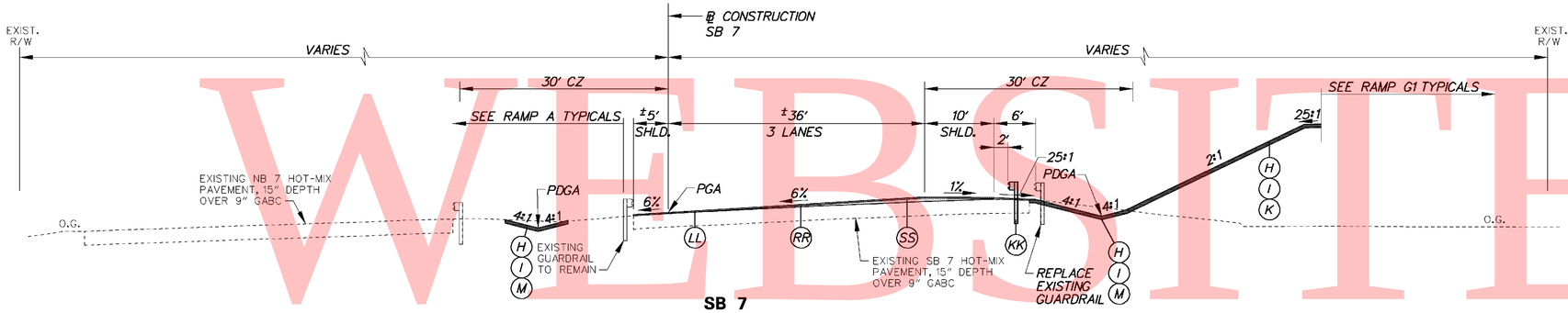

SB 7

STA. 1617+25.75 TO STA. 1618+04.98

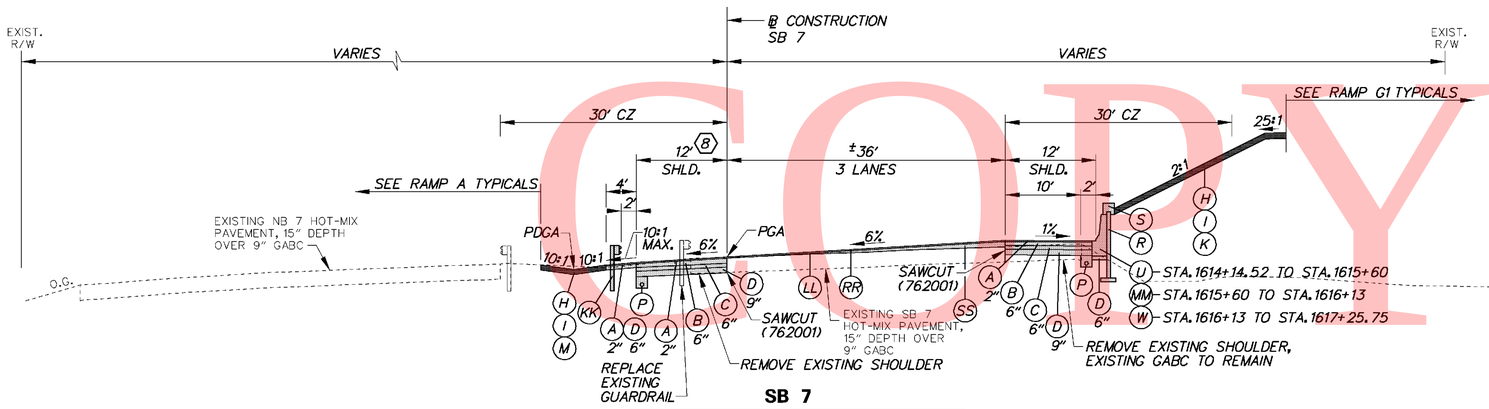

SB 7

STA. 1614+14.52 TO STA. 1617+25.75

(8) STA. 1614+50 TO STA. 1616+30 - WIDTH TAPERS 12' TO 6'

LEGEND

- (A) ITEM 401708 - SUPERPAVE, TYPE C HOT-MIX, 160 GYRATIONS, PG 70-22 (NON-CARBONATE STONE)
- (B) ITEM 401654 - SUPERPAVE, TYPE B HOT-MIX, 160 GYRATIONS, PG 70-22
- (C) ITEM 401663 - SUPERPAVE, BITUMINOUS CONCRETE BASE COURSE, 160 GYRATIONS, PG 64-22
- (D) ITEM 302007 - GRADED AGGREGATE BASE COURSE, TYPE B
- (E) ITEM 401711 - SUPERPAVE, TYPE C HOT-MIX, 160 GYRATIONS, PG 76-22 (NON-CARBONATE STONE)
- (F) ITEM 401660 - SUPERPAVE, TYPE B HOT-MIX, 160 GYRATIONS, PG 76-22
- (G) ITEM 501006 - PORTLAND CEMENT CONCRETE PAVEMENT, 12"
- (H) ITEM 732002 - TOPSOIL, 6" DEPTH
- (I) ITEM 734013 - PERMANENT GRASS SEEDING, DRY GROUND
- (J) ITEM 602017 - PCC MASONRY, PARAPET, CLASS A
- (K) ITEM 735533 - SOIL RETENTION BLANKET MULCH, TYPE 3
- (L) ITEM 735534 - SOIL RETENTION BLANKET MULCH, TYPE 4
- (M) ITEM 735535 - SOIL RETENTION BLANKET MULCH, TYPE 5, UNLESS OTHERWISE NOTED, SEE DRAINAGE PLANS FOR LIMITS AND TYPE
- (N) ITEM 209001 - BORROW, TYPE A
- (O) ITEM 209006 - BORROW, TYPE F OR APPROVED PROJECT EXCAVATION
- (P) ITEM 715001 - PERFORATED PIPE UNDERDRAINS, 6"
- (Q) ITEM 760504 - RUMBLE STRIPS, HOT-MIX
- (R) ITEM 602772 - MECHANICALLY STABILIZED EARTH WALLS
- (S) ITEM 602773 - PCC MASONRY FOR MECHANICALLY STABILIZED EARTH WALLS
- (T) ITEM ~~720512~~ 720529 - PCC SAFETY BARRIER PERMANENT, SINGLE FACE
- (U) ITEM 720654 - PCC SAFETY BARRIER PERMANENT, SINGLE FACE, MODIFIED TYPE 1
- (V) ITEM 720587 - PCC SAFETY BARRIER PERMANENT, DOUBLE FACE, MODIFIED
- (W) ITEM 720655 - PCC SAFETY BARRIER PERMANENT, SINGLE FACE, MODIFIED TYPE 2
- (X) ITEM 712005 - RIPRAP, R-4
- (Y) ITEM 401665 - SUPERPAVE, TYPE C HOT-MIX, 160 GYRATIONS, PG 64-22, PATCHING
- (Z) ITEM 401666 - SUPERPAVE, TYPE B HOT-MIX, 160 GYRATIONS, PG 64-22, PATCHING
- (AA) ITEM 401667 - SUPERPAVE, BITUMINOUS CONCRETE BASE COURSE, 160 GYRATIONS, PG 64-22, PATCHING
- (BB) ITEM 302008 - GRADED AGGREGATE BASE COURSE, TYPE B, PATCHING
- (CC) ITEM 755000 - HOT-MIX, HOT LAID, BITUMINOUS CONCRETE CURB
- (DD) ITEM 701010 - PORTLAND CEMENT CONCRETE CURB, TYPE 1
- (EE) ITEM 701011 - PORTLAND CEMENT CONCRETE CURB, TYPE 2
- (FF) ITEM 701020 - INTEGRAL PORTLAND CEMENT CONCRETE CURB AND GUTTER, TYPE 1
- (GG) ITEM 701023 - INTEGRAL PORTLAND CEMENT CONCRETE CURB AND GUTTER, TYPE 4
- (HH) ITEM 701026 - PORTLAND CEMENT CONCRETE MONOLITHIC MEDIAN
- (II) ITEM 701027 - PORTLAND CEMENT CONCRETE CURB, TYPE 1 MODIFIED
- (JJ) ITEM 720658 - PCC SAFETY BARRIER PERMANENT SINGLE FACE, MODIFIED, TYPE 5
- (KK) ITEM 720050 - GALVANIZED STEEL BEAM GUARDRAIL, TYPE 1
- (LL) ITEM 760507 - PROFILE MILLING, HOT-MIX
- (MM) ITEM 720656 - PCC SAFETY BARRIER PERMANENT, SINGLE FACE, MODIFIED, TYPE 3
- (NN) ITEM 720657 - PCC SAFETY BARRIER PERMANENT, SINGLE FACE, MODIFIED, TYPE 4
- (OO) ITEM 720651 - PCC SAFETY BARRIER PERMANENT, DOUBLE FACE, BIFURCATED, TYPE 1
- (PP) ITEM 720652 - PCC SAFETY BARRIER PERMANENT, DOUBLE FACE, BIFURCATED, TYPE 2
- (RR) ITEM 401668 - SUPERPAVE, TYPE C HOT-MIX, 160 GYRATIONS, PG 64-22, WEDGE
- (SS) ITEM 401669 - SUPERPAVE, TYPE B HOT-MIX, 160 GYRATIONS, PG 64-22, WEDGE

PAVEMENT LIFT NOTE:

THE MAXIMUM LIFTS FOR THE INDIVIDUAL PAVING MATERIAL ARE AS FOLLOWS:
SUPERPAVE, TYPE C HOT-MIX - 2"
SUPERPAVE, TYPE B HOT-MIX - 3"
SUPERPAVE, BIT. CONC. BASE COURSE - 6"
GRADED AGGREGATE BASE COURSE - 8"

NOTES:

1) THE PGA IS APPLIED TO THE TOP OF THE FINAL PAVEMENT SURFACE.

UNOFFICIAL WEBSITE COPY

2/15/2011 11:42:19 AM
M:\PROJECTS\2003\03059_DELTRNPK\SRTMALL\CADD\2809003\PLANS\TS07_SR1.DGN

DELAWARE DEPARTMENT OF TRANSPORTATION	ADDENDUMS / REVISIONS	NOT TO SCALE	SR1 / I-95 INTERCHANGE	CONTRACT 28-090-03	BRIDGE NO.	TYPICAL SECTIONS	SHEET NO. 12
	ADDENDUM NO. 3 CHANGED ITEM NO., 02/18/2011, RLS			COUNTY NEW CASTLE	DESIGNED BY:		TOTAL SHTS. 803
					CHECKED BY:		

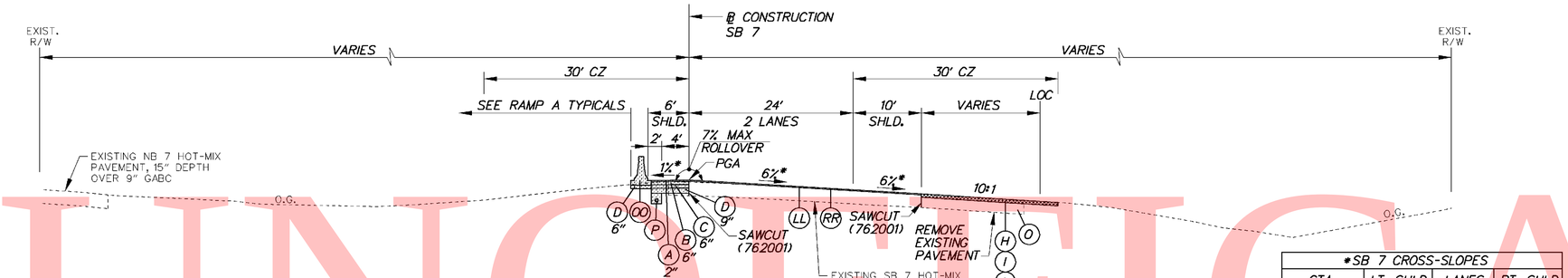

SB 7

STA. 1630+19.94 TO STA. 1637+00

STA. 1630+19.94 TO STA. 1632+70.54 - 2" MILL & 2" TYPE C OVERLAY
STA. 1632+70.54 TO STA. 1633+20.54 - 2" MILL & TYPE C WEDGE OVERLAY
STA. 1633+20.54 TO STA. 1634+20.54 - 2" MILL & TYPE B/C WEDGE OVERLAY
STA. 1634+20.54 TO STA. 1634+69.20 - 2" MILL & TYPE C WEDGE OVERLAY
STA. 1634+69.20 TO STA. 1637+00 - 2" MILL & 2" TYPE C OVERLAY

*SB 7 CROSS-SLOPES			
STA.	LT. SHLD.	LANES	RT. SHLD.
1633+47.69	-4.00%	-2.00%	-4.00%
1633+50	-4.00%	-2.06%	-4.00%
1633+87.69	-4.00%	-3.00%	-4.00%
1634+00	-3.69%	-3.31%	-4.00%
1634+27.69	-3.00%	-4.00%	-4.00%
1634+50	-2.44%	-4.56%	-4.56%
1635+00	-1.19%	-5.81%	-5.81%
1635+07.69	-1.00%	-6.00%	-6.00%

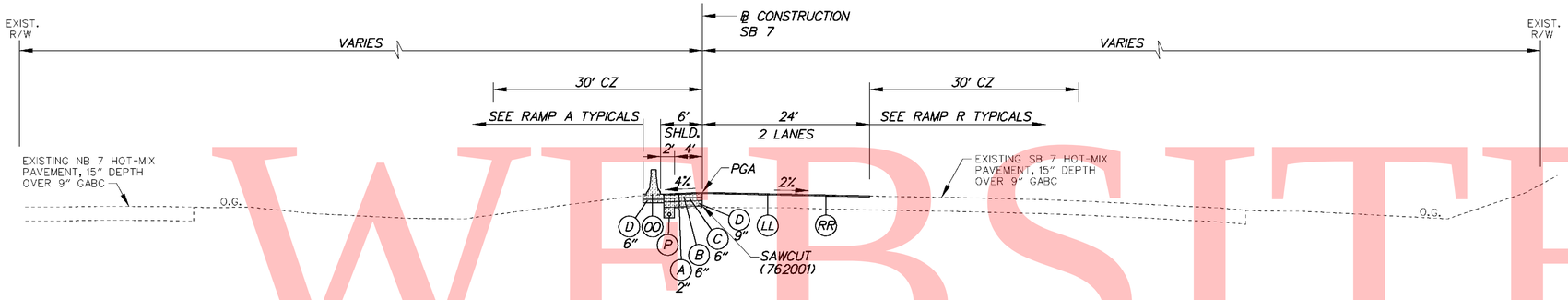

SB 7

STA. 1626+02.15 TO STA. 1630+19.94

STA. 1626+02.15 TO STA. 1627+20.54 - 2" MILL & TYPE C WEDGE OVERLAY
STA. 1627+20.54 TO STA. 1629+70.54 - 2" MILL & 2" TYPE C OVERLAY
STA. 1629+70.54 TO STA. 1630+19.94 - 2" MILL & TYPE C WEDGE OVERLAY

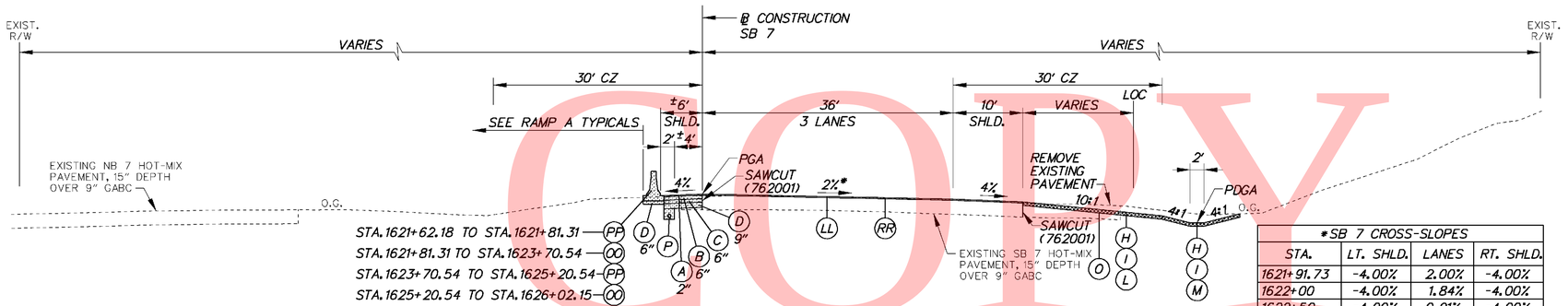

SB 7

STA. 1621+62.18 TO STA. 1626+02.15

STA. 1621+68.35 TO STA. 1623+70.54 - 2" MILL & 2" TYPE C OVERLAY
STA. 1623+70.54 TO STA. 1625+20.54 - 2" MILL & TYPE C WEDGE OVERLAY
STA. 1625+20.54 TO STA. 1625+29.52 - 2" MILL & 2" TYPE C OVERLAY
STA. 1625+29.52 TO STA. 1626+02.15 - 2" MILL & TYPE C WEDGE OVERLAY

*SB 7 CROSS-SLOPES			
STA.	LT. SHLD.	LANES	RT. SHLD.
1621+91.73	-4.00%	2.00%	-4.00%
1622+00	-4.00%	1.84%	-4.00%
1622+50	-4.00%	0.91%	-4.00%
1622+98.40	-4.00%	0.00%	-4.00%
1623+00	-4.00%	-0.03%	-4.00%
1623+50	-4.00%	-0.97%	-4.00%
1624+00	-4.00%	-1.92%	-4.00%
1624+04.40	-4.00%	-2.00%	-4.00%

LEGEND

- (A) ITEM 401708 - SUPERPAVE, TYPE C HOT-MIX, 160 GYRATIONS, PG 70-22 (NON-CARBONATE STONE)
- (B) ITEM 401654 - SUPERPAVE, TYPE B HOT-MIX, 160 GYRATIONS, PG 70-22
- (C) ITEM 401663 - SUPERPAVE, BITUMINOUS CONCRETE BASE COURSE, 160 GYRATIONS, PG 64-22
- (D) ITEM 302007 - GRADED AGGREGATE BASE COURSE, TYPE B
- (E) ITEM 401711 - SUPERPAVE, TYPE C HOT-MIX, 160 GYRATIONS, PG 76-22 (NON-CARBONATE STONE)
- (F) ITEM 401660 - SUPERPAVE, TYPE B HOT-MIX, 160 GYRATIONS, PG 76-22
- (G) ITEM 501006 - PORTLAND CEMENT CONCRETE PAVEMENT, 12"
- (H) ITEM 732002 - TOPSOIL, 6" DEPTH
- (I) ITEM 734013 - PERMANENT GRASS SEEDING, DRY GROUND
- (J) ITEM 602017 - PCC MASONRY, PARAPET, CLASS A
- (K) ITEM 735533 - SOIL RETENTION BLANKET MULCH, TYPE 3
- (L) ITEM 735534 - SOIL RETENTION BLANKET MULCH, TYPE 4
- (M) ITEM 735535 - SOIL RETENTION BLANKET MULCH, TYPE 5, UNLESS OTHERWISE NOTED, SEE DRAINAGE PLANS FOR LIMITS AND TYPE
- (N) ITEM 209001 - BORROW, TYPE A
- (O) ITEM 209006 - BORROW, TYPE F OR APPROVED PROJECT EXCAVATION
- (P) ITEM 715001 - PERFORATED PIPE UNDERDRAINS, 6"
- (Q) ITEM 760504 - RUMBLE STRIPS, HOT-MIX
- (R) ITEM 602772 - MECHANICALLY STABILIZED EARTH WALLS
- (S) ITEM 602773 - PCC MASONRY FOR MECHANICALLY STABILIZED EARTH WALLS
- (T) ITEM ~~720512~~ 720529 - PCC SAFETY BARRIER PERMANENT, SINGLE FACE
- (U) ITEM 720654 - PCC SAFETY BARRIER PERMANENT, SINGLE FACE, MODIFIED TYPE 1
- (V) ITEM 720587 - PCC SAFETY BARRIER PERMANENT, DOUBLE FACE, MODIFIED
- (W) ITEM 720655 - PCC SAFETY BARRIER PERMANENT, SINGLE FACE, MODIFIED TYPE 2
- (X) ITEM 712005 - RIPRAP, R-4
- (Y) ITEM 401665 - SUPERPAVE, TYPE C HOT-MIX, 160 GYRATIONS, PG 64-22, PATCHING
- (Z) ITEM 401666 - SUPERPAVE, TYPE B HOT-MIX, 160 GYRATIONS, PG 64-22, PATCHING
- (AA) ITEM 401667 - SUPERPAVE, BITUMINOUS CONCRETE BASE COURSE, 160 GYRATIONS, PG 64-22, PATCHING
- (BB) ITEM 302008 - GRADED AGGREGATE BASE COURSE, TYPE B, PATCHING
- (CC) ITEM 755000 - HOT-MIX, HOT LAID, BITUMINOUS CONCRETE CURB
- (DD) ITEM 701010 - PORTLAND CEMENT CONCRETE CURB, TYPE 1
- (EE) ITEM 701011 - PORTLAND CEMENT CONCRETE CURB, TYPE 2
- (FF) ITEM 701020 - INTEGRAL PORTLAND CEMENT CONCRETE CURB AND GUTTER, TYPE 1
- (GG) ITEM 701023 - INTEGRAL PORTLAND CEMENT CONCRETE CURB AND GUTTER, TYPE 4
- (HH) ITEM 701026 - PORTLAND CEMENT CONCRETE MONOLITHIC MEDIAN
- (II) ITEM 701027 - PORTLAND CEMENT CONCRETE CURB, TYPE 1 MODIFIED
- (JJ) ITEM 720658 - PCC SAFETY BARRIER PERMANENT SINGLE FACE, MODIFIED, TYPE 5
- (KK) ITEM 720050 - GALVANIZED STEEL BEAM GUARDRAIL, TYPE 1
- (LL) ITEM 760507 - PROFILE MILLING, HOT-MIX
- (MM) ITEM 720656 - PCC SAFETY BARRIER PERMANENT, SINGLE FACE, MODIFIED, TYPE 3
- (NN) ITEM 720657 - PCC SAFETY BARRIER PERMANENT, SINGLE FACE, MODIFIED, TYPE 4
- (OO) ITEM 720651 - PCC SAFETY BARRIER PERMANENT, DOUBLE FACE, BIFURCATED, TYPE 1
- (PP) ITEM 720652 - PCC SAFETY BARRIER PERMANENT, DOUBLE FACE, BIFURCATED, TYPE 2
- (RR) ITEM 401668 - SUPERPAVE, TYPE C HOT-MIX, 160 GYRATIONS, PG 64-22, WEDGE
- (SS) ITEM 401669 - SUPERPAVE, TYPE B HOT-MIX, 160 GYRATIONS, PG 64-22, WEDGE

PAVEMENT LIFT NOTE:

THE MAXIMUM LIFTS FOR THE INDIVIDUAL PAVING MATERIAL ARE AS FOLLOWS:
SUPERPAVE, TYPE C HOT-MIX - 2"
SUPERPAVE, TYPE B HOT-MIX - 3"
SUPERPAVE, BIT. CONC. BASE COURSE - 6"
GRADED AGGREGATE BASE COURSE - 8"

NOTES:

1) THE PGA IS APPLIED TO THE TOP OF THE FINAL PAVEMENT SURFACE.

UNOFFICIAL WEBSITE COPY

2/15/2011 11:43:22 AM
M:\PROJECTS\2003\03059_DELTRNPK\SRIMALL\CADD\2809003\PLANS\TS08_SR1.DGN

DELAWARE DEPARTMENT OF TRANSPORTATION

ADDENDUMS / REVISIONS	
ADDENDUM NO. 3 CHANGED ITEM NO.,	
02/18/2011, RLS	

NOT TO SCALE

SR1 / I-95 INTERCHANGE

CONTRACT	28-090-03
COUNTY	NEW CASTLE
BRIDGE NO.	
DESIGNED BY:	
CHECKED BY:	

TYPICAL SECTIONS

SHEET NO.	13
TOTAL SHTS.	803

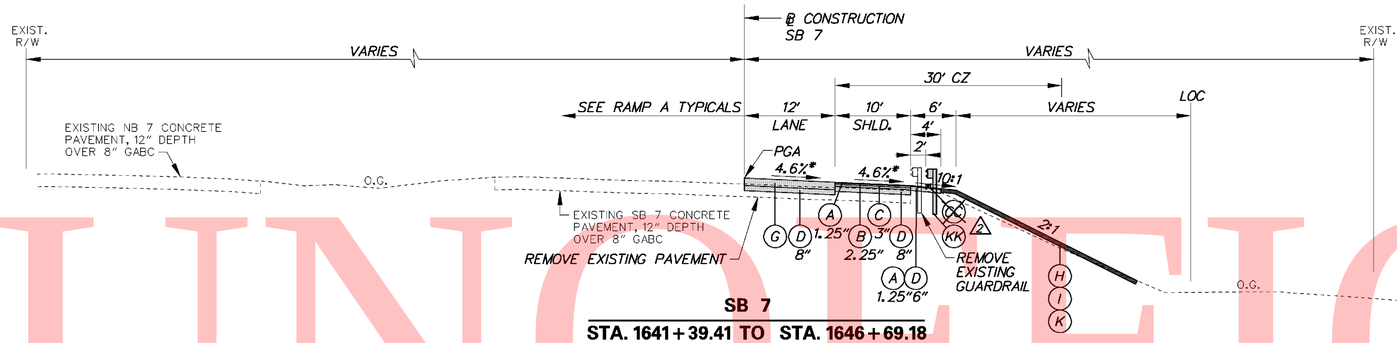

SB 7
STA. 1641+39.41 TO STA. 1646+69.18

*SB 7 CROSS-SLOPES			
STA.	LT. SHLD.	LANES	RT. SHLD.
1645+11.75	-	-4.60%	-4.60%
1645+27.90	-	-4.00%	-4.00%
1645+50	-	-3.18%	-4.00%
1645+52.75	-	-3.08%	-4.00%
1645+81.75	-	-2.00%	-4.00%

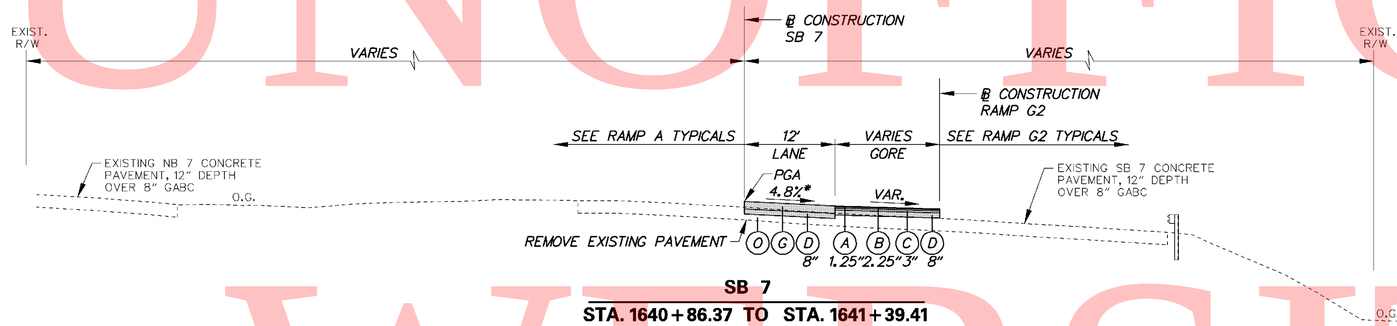

SB 7
STA. 1640+86.37 TO STA. 1641+39.41

*SB 7 CROSS-SLOPES			
STA.	LT. SHLD.	LANES	RT. SHLD.
1641+00	-	-4.80%	-
1641+05.37	-	-4.60%	-

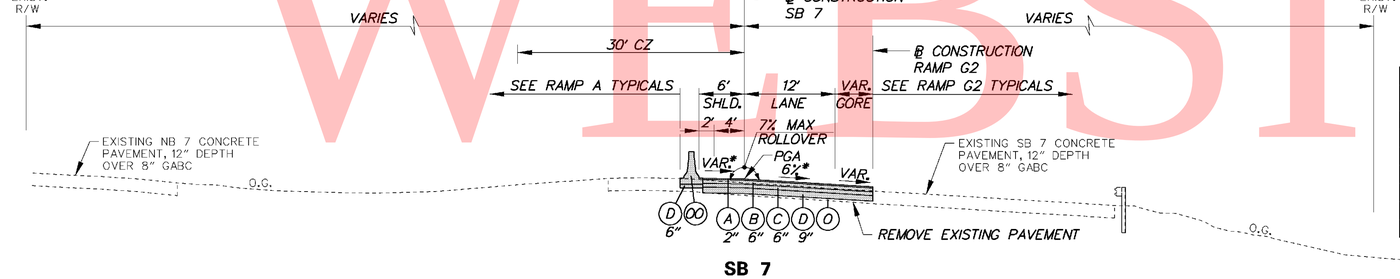

SB 7
STA. 1638+40.46 TO STA. 1640+86.37

*SB 7 CROSS-SLOPES			
STA.	LT. SHLD.	LANES	RT. SHLD.
1639+75.00	-1.00%	-6.00%	-
1639+90.00	0.00%	-6.00%	-
1640+00	0.67%	-6.00%	-
1640+50	4.00%	-6.00%	-
1640+67.37	5.16%	-6.00%	-
1640+80.00	6.00%	-5.53%	-
1640+86.37	6.00%	-5.30%	-

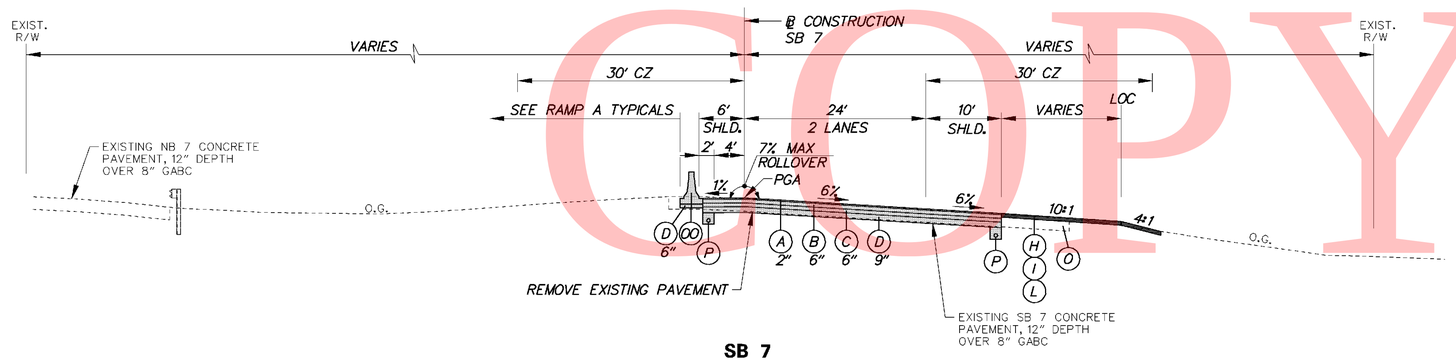

SB 7
STA. 1637+00 TO STA. 1638+40.46

LEGEND

- (A) ITEM 401708 - SUPERPAVE, TYPE C HOT-MIX, 160 GYRATIONS, PG 70-22 (NON-CARBONATE STONE)
- (B) ITEM 401654 - SUPERPAVE, TYPE B HOT-MIX, 160 GYRATIONS, PG 70-22
- (C) ITEM 401663 - SUPERPAVE, BITUMINOUS CONCRETE BASE COURSE, 160 GYRATIONS, PG 64-22
- (D) ITEM 302007 - GRADED AGGREGATE BASE COURSE, TYPE B
- (E) ITEM 401711 - SUPERPAVE, TYPE C HOT-MIX, 160 GYRATIONS, PG 76-22 (NON-CARBONATE STONE)
- (F) ITEM 401660 - SUPERPAVE, TYPE B HOT-MIX, 160 GYRATIONS, PG 76-22
- (G) ITEM 501006 - PORTLAND CEMENT CONCRETE PAVEMENT, 12"
- (H) ITEM 732002 - TOPSOIL, 6" DEPTH
- (I) ITEM 734013 - PERMANENT GRASS SEEDING, DRY GROUND
- (J) ITEM 602017 - PCC MASONRY, PARAPET, CLASS A
- (K) ITEM 735533 - SOIL RETENTION BLANKET MULCH, TYPE 3
- (L) ITEM 735534 - SOIL RETENTION BLANKET MULCH, TYPE 4
- (M) ITEM 735535 - SOIL RETENTION BLANKET MULCH, TYPE 5, UNLESS OTHERWISE NOTED, SEE DRAINAGE PLANS FOR LIMITS AND TYPE
- (N) ITEM 209001 - BORROW, TYPE A
- (O) ITEM 209006 - BORROW, TYPE F OR APPROVED PROJECT EXCAVATION
- (P) ITEM 715001 - PERFORATED PIPE UNDERDRAINS, 6"
- (Q) ITEM 760504 - RUMBLE STRIPS, HOT-MIX
- (R) ITEM 602772 - MECHANICALLY STABILIZED EARTH WALLS
- (S) ITEM 602773 - PCC MASONRY FOR MECHANICALLY STABILIZED EARTH WALLS
- (T) ITEM ~~720512~~ 2 720529 - PCC SAFETY BARRIER PERMANENT, SINGLE FACE
- (U) ITEM 720654 - PCC SAFETY BARRIER PERMANENT, SINGLE FACE, MODIFIED TYPE 1
- (V) ITEM 720587 - PCC SAFETY BARRIER PERMANENT, DOUBLE FACE, MODIFIED
- (W) ITEM 720655 - PCC SAFETY BARRIER PERMANENT, SINGLE FACE, MODIFIED TYPE 2
- (X) ITEM 712005 - RIPRAP, R-4
- (Y) ITEM 401665 - SUPERPAVE, TYPE C HOT-MIX, 160 GYRATIONS, PG 64-22, PATCHING
- (Z) ITEM 401666 - SUPERPAVE, TYPE B HOT-MIX, 160 GYRATIONS, PG 64-22, PATCHING
- (AA) ITEM 401667 - SUPERPAVE, BITUMINOUS CONCRETE BASE COURSE, 160 GYRATIONS, PG 64-22, PATCHING
- (BB) ITEM 302008 - GRADED AGGREGATE BASE COURSE, TYPE B, PATCHING
- (CC) ITEM 755000 - HOT-MIX, HOT LAID, BITUMINOUS CONCRETE CURB
- (DD) ITEM 701010 - PORTLAND CEMENT CONCRETE CURB, TYPE 1
- (EE) ITEM 701011 - PORTLAND CEMENT CONCRETE CURB, TYPE 2
- (FF) ITEM 701020 - INTEGRAL PORTLAND CEMENT CONCRETE CURB AND GUTTER, TYPE 1
- (GG) ITEM 701023 - INTEGRAL PORTLAND CEMENT CONCRETE CURB AND GUTTER, TYPE 4
- (HH) ITEM 701026 - PORTLAND CEMENT CONCRETE MONOLITHIC MEDIAN
- (II) ITEM 701027 - PORTLAND CEMENT CONCRETE CURB, TYPE 1 MODIFIED
- (JJ) ITEM 720658 - PCC SAFETY BARRIER PERMANENT SINGLE FACE, MODIFIED, TYPE 5
- (KK) ITEM 720050 - GALVANIZED STEEL BEAM GUARDRAIL, TYPE 1
- (LL) ITEM 760507 - PROFILE MILLING, HOT-MIX
- (MM) ITEM 720656 - PCC SAFETY BARRIER PERMANENT, SINGLE FACE, MODIFIED, TYPE 3
- (NN) ITEM 720657 - PCC SAFETY BARRIER PERMANENT, SINGLE FACE, MODIFIED, TYPE 4
- (OO) ITEM 720651 - PCC SAFETY BARRIER PERMANENT, DOUBLE FACE, BIFURCATED, TYPE 1
- (PP) ITEM 720652 - PCC SAFETY BARRIER PERMANENT, DOUBLE FACE, BIFURCATED, TYPE 2
- (RR) ITEM 401668 - SUPERPAVE, TYPE C HOT-MIX, 160 GYRATIONS, PG 64-22, WEDGE
- (SS) ITEM 401669 - SUPERPAVE, TYPE B HOT-MIX, 160 GYRATIONS, PG 64-22, WEDGE

PAVEMENT LIFT NOTE:

THE MAXIMUM LIFTS FOR THE INDIVIDUAL PAVING MATERIAL ARE AS FOLLOWS:
SUPERPAVE, TYPE C HOT-MIX - 2"
SUPERPAVE, TYPE B HOT-MIX - 3"
SUPERPAVE, BIT. CONC. BASE COURSE - 6"
GRADED AGGREGATE BASE COURSE - 8"

NOTES:

1) THE PGA IS APPLIED TO THE TOP OF THE FINAL PAVEMENT SURFACE.

UNOFFICIAL WEBSITE COPY

2/15/2011 11:44:29 AM
M:\PROJECTS\2003\03059_DELTRNPK\SRTMALL\CADD\2809003\PLANS\TS09_SR.DGN

DELAWARE DEPARTMENT OF TRANSPORTATION

ADDENDUMS / REVISIONS	
ADDENDUM NO. 2 REMOVED BITUMINOUS CURB, 01/26/2011, RLS	
ADDENDUM NO. 3 CHANGED ITEM NO., 02/18/2011, RLS	

NOT TO SCALE

SR1 / I-95 INTERCHANGE

CONTRACT	BRIDGE NO.	
28-090-03	DESIGNED BY:	
COUNTY	CHECKED BY:	
NEW CASTLE		

TYPICAL SECTIONS

SHEET NO.
14
TOTAL SHTS.
803

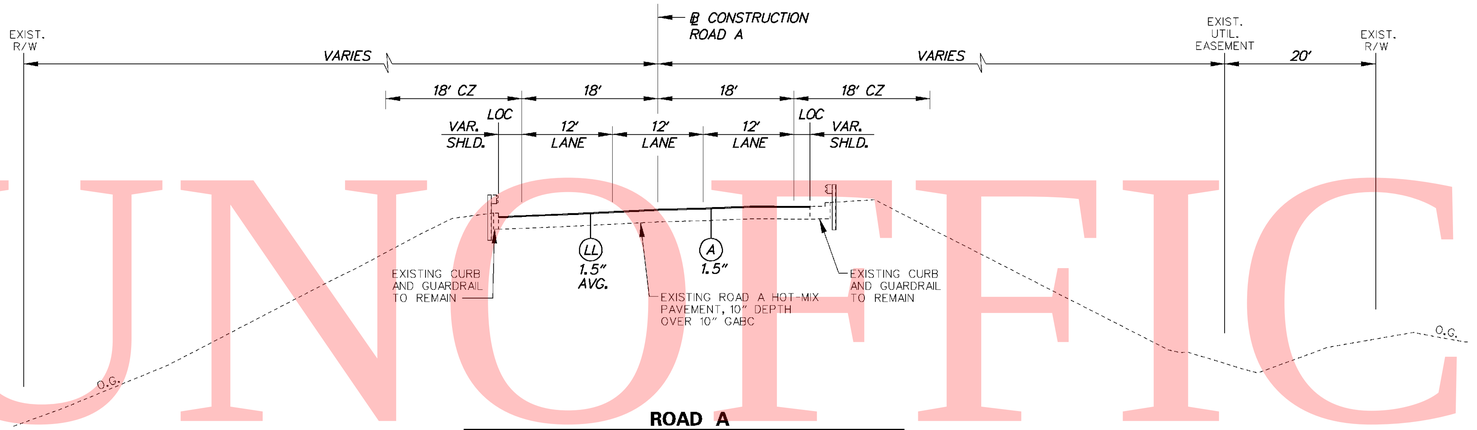

ROAD A

STA. 2204+66.02 TO STA. 2207+46.01 (BRIDGE)

STA. 2209+94.47 (BRIDGE) TO STA. 2214+46.63

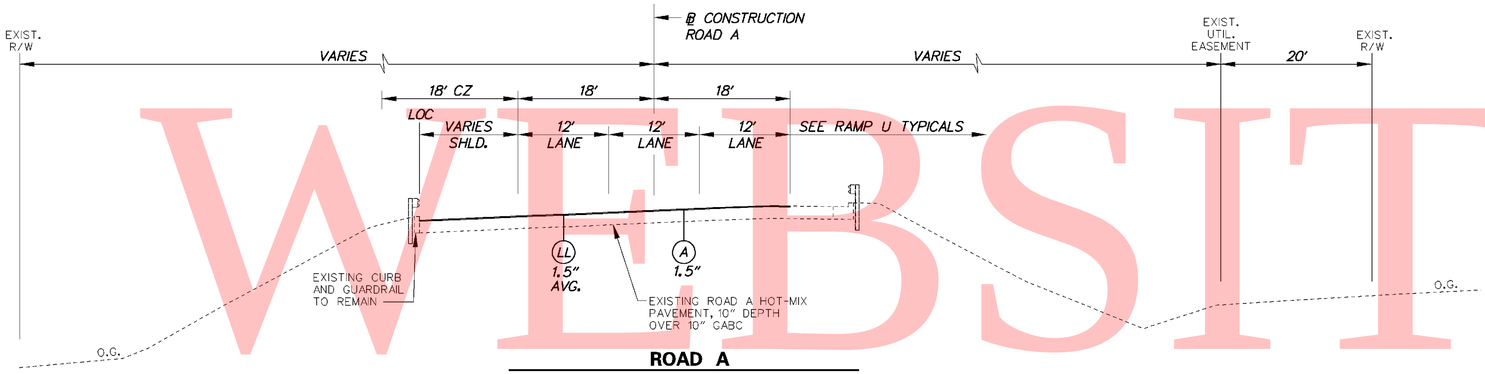

ROAD A

STA. 2202+80.09 TO STA. 2204+66.02

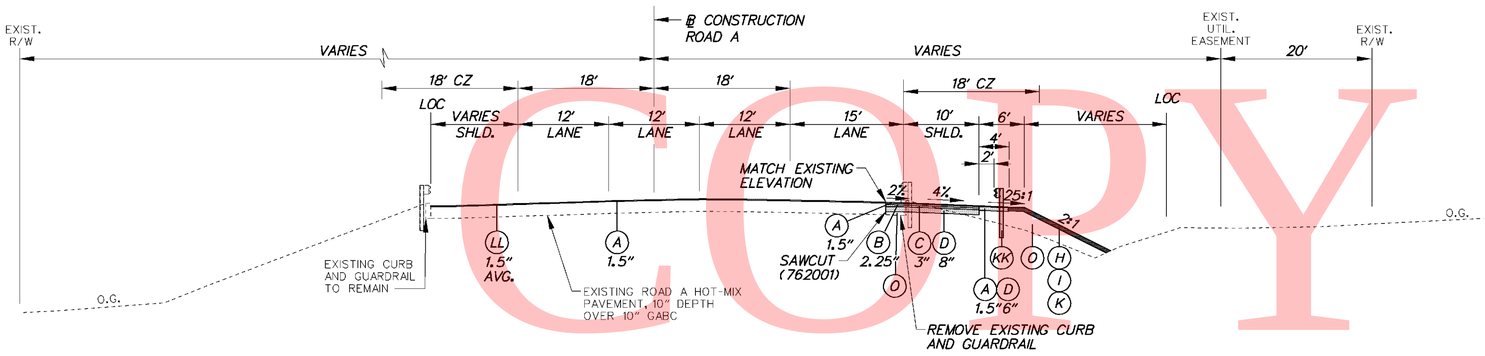

ROAD A

STA. 2200+60.43 TO STA. 2202+80.09

LEGEND

- (A) ITEM 401708 - SUPERPAVE, TYPE C HOT-MIX, 160 GYRATIONS, PG 70-22 (NON-CARBONATE STONE)
- (B) ITEM 401654 - SUPERPAVE, TYPE B HOT-MIX, 160 GYRATIONS, PG 70-22
- (C) ITEM 401663 - SUPERPAVE, BITUMINOUS CONCRETE BASE COURSE, 160 GYRATIONS, PG 64-22
- (D) ITEM 302007 - GRADED AGGREGATE BASE COURSE, TYPE B
- (E) ITEM 401711 - SUPERPAVE, TYPE C HOT-MIX, 160 GYRATIONS, PG 76-22 (NON-CARBONATE STONE)
- (F) ITEM 401660 - SUPERPAVE, TYPE B HOT-MIX, 160 GYRATIONS, PG 76-22
- (G) ITEM 501006 - PORTLAND CEMENT CONCRETE PAVEMENT, 12"
- (H) ITEM 732002 - TOPSOIL, 6" DEPTH
- (I) ITEM 734013 - PERMANENT GRASS SEEDING, DRY GROUND
- (J) ITEM 602017 - PCC MASONRY, PARAPET, CLASS A
- (K) ITEM 735533 - SOIL RETENTION BLANKET MULCH, TYPE 3
- (L) ITEM 735534 - SOIL RETENTION BLANKET MULCH, TYPE 4
- (M) ITEM 735535 - SOIL RETENTION BLANKET MULCH, TYPE 5, UNLESS OTHERWISE NOTED, SEE DRAINAGE PLANS FOR LIMITS AND TYPE
- (N) ITEM 209001 - BORROW, TYPE A
- (O) ITEM 209006 - BORROW, TYPE F OR APPROVED PROJECT EXCAVATION
- (P) ITEM 715001 - PERFORATED PIPE UNDERDRAINS, 6"
- (Q) ITEM 760504 - RUMBLE STRIPS, HOT-MIX
- (R) ITEM 602772 - MECHANICALLY STABILIZED EARTH WALLS
- (S) ITEM 602773 - PCC MASONRY FOR MECHANICALLY STABILIZED EARTH WALLS
- (T) ITEM ~~720512~~ 720529 - PCC SAFETY BARRIER PERMANENT, SINGLE FACE
- (U) ITEM 720654 - PCC SAFETY BARRIER PERMANENT, SINGLE FACE, MODIFIED TYPE 1
- (V) ITEM 720587 - PCC SAFETY BARRIER PERMANENT, DOUBLE FACE, MODIFIED
- (W) ITEM 720655 - PCC SAFETY BARRIER PERMANENT, SINGLE FACE, MODIFIED TYPE 2
- (X) ITEM 712005 - RIPRAP, R-4
- (Y) ITEM 401665 - SUPERPAVE, TYPE C HOT-MIX, 160 GYRATIONS, PG 64-22, PATCHING
- (Z) ITEM 401666 - SUPERPAVE, TYPE B HOT-MIX, 160 GYRATIONS, PG 64-22, PATCHING
- (AA) ITEM 401667 - SUPERPAVE, BITUMINOUS CONCRETE BASE COURSE, 160 GYRATIONS, PG 64-22, PATCHING
- (BB) ITEM 302008 - GRADED AGGREGATE BASE COURSE, TYPE B, PATCHING
- (CC) ITEM 755000 - HOT-MIX, HOT LAID, BITUMINOUS CONCRETE CURB
- (DD) ITEM 701010 - PORTLAND CEMENT CONCRETE CURB, TYPE 1
- (EE) ITEM 701011 - PORTLAND CEMENT CONCRETE CURB, TYPE 2
- (FF) ITEM 701020 - INTEGRAL PORTLAND CEMENT CONCRETE CURB AND GUTTER, TYPE 1
- (GG) ITEM 701023 - INTEGRAL PORTLAND CEMENT CONCRETE CURB AND GUTTER, TYPE 4
- (HH) ITEM 701026 - PORTLAND CEMENT CONCRETE MONOLITHIC MEDIAN
- (II) ITEM 701027 - PORTLAND CEMENT CONCRETE CURB, TYPE 1 MODIFIED
- (JJ) ITEM 720658 - PCC SAFETY BARRIER PERMANENT SINGLE FACE, MODIFIED, TYPE 5
- (KK) ITEM 720050 - GALVANIZED STEEL BEAM GUARDRAIL, TYPE 1
- (LL) ITEM 760507 - PROFILE MILLING, HOT-MIX
- (MM) ITEM 720656 - PCC SAFETY BARRIER PERMANENT, SINGLE FACE, MODIFIED, TYPE 3
- (NN) ITEM 720657 - PCC SAFETY BARRIER PERMANENT, SINGLE FACE, MODIFIED, TYPE 4
- (OO) ITEM 720651 - PCC SAFETY BARRIER PERMANENT, DOUBLE FACE, BIFURCATED, TYPE 1
- (PP) ITEM 720652 - PCC SAFETY BARRIER PERMANENT, DOUBLE FACE, BIFURCATED, TYPE 2
- (RR) ITEM 401668 - SUPERPAVE, TYPE C HOT-MIX, 160 GYRATIONS, PG 64-22, WEDGE
- (SS) ITEM 401669 - SUPERPAVE, TYPE B HOT-MIX, 160 GYRATIONS, PG 64-22, WEDGE

PAVEMENT LIFT NOTE:

THE MAXIMUM LIFTS FOR THE INDIVIDUAL PAVING MATERIAL ARE AS FOLLOWS:
SUPERPAVE, TYPE C HOT-MIX - 2"
SUPERPAVE, TYPE B HOT-MIX - 3"
SUPERPAVE, BIT. CONC. BASE COURSE - 6"
GRADED AGGREGATE BASE COURSE - 8"

NOTES:

1) THE PGA IS APPLIED TO THE TOP OF THE FINAL PAVEMENT SURFACE.

UNOFFICIAL WEBSITE COPY

2/15/2011 11:51:40 AM
M:\PROJECTS\2003\03059_DELTRNPK\SRIMALL\CADD\2809003\PLANS\TS10_SR1.DGN

DELAWARE DEPARTMENT OF TRANSPORTATION	ADDENDUMS / REVISIONS	NOT TO SCALE	SR1 / I-95 INTERCHANGE	CONTRACT 28-090-03	BRIDGE NO.	TYPICAL SECTIONS	SHEET NO. 15
	ADDENDUM NO. 3 CHANGED ITEM NO., 02/18/2011, RLS			COUNTY NEW CASTLE	DESIGNED BY:		TOTAL SHTS. 803
					CHECKED BY:		

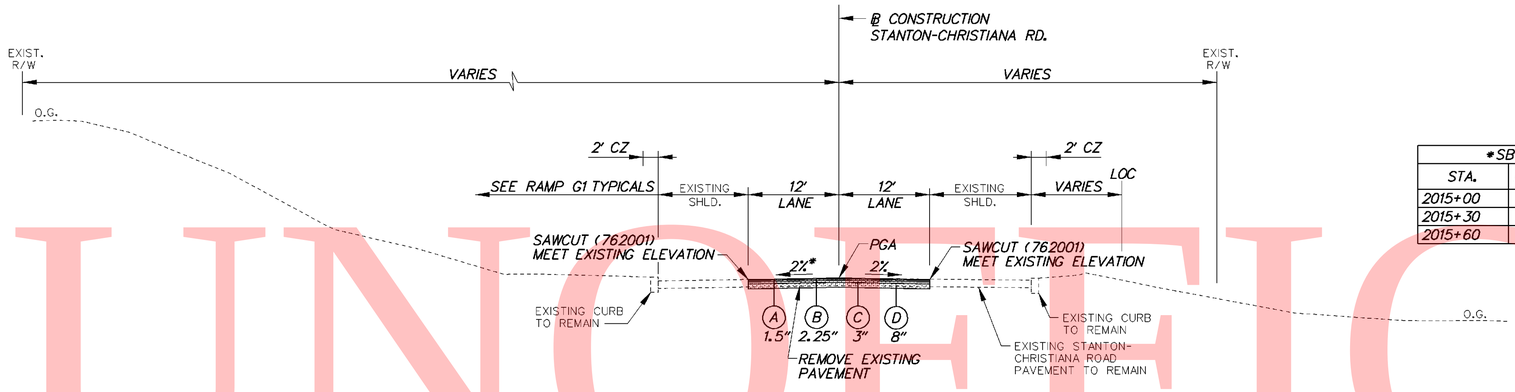

STANTON–CHRISTIANA ROAD
STA. 2015+59.83 TO STA. 2015+80

*SB 7 CROSS-SLOPES			
STA.	LT. SHLD.	LANES	RT. SHLD.
2015+00	2.00%	-2.00%	-2.00%
2015+30	-	-2.00%	-2.00%
2015+60	2.00%	-2.00%	-2.00%

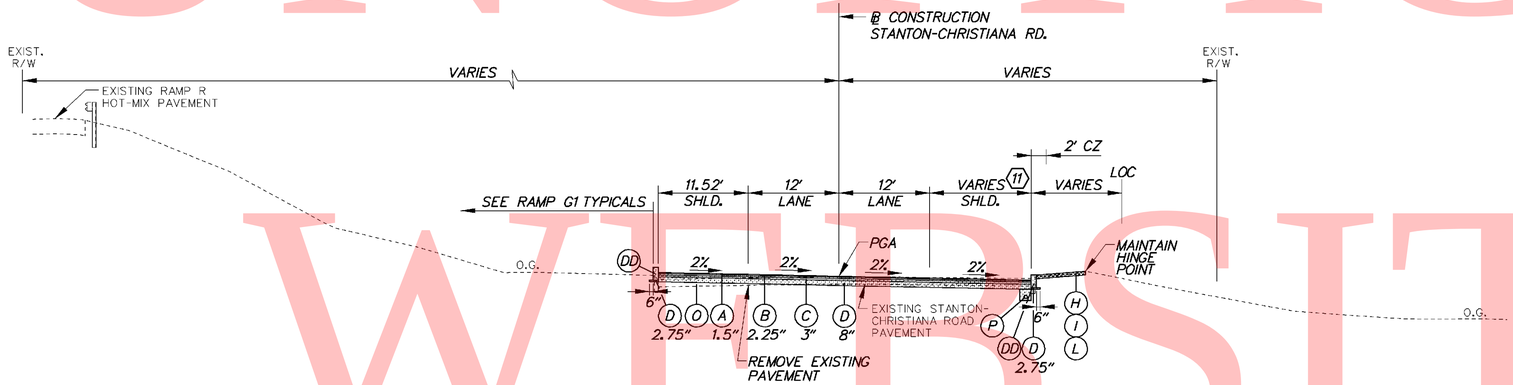

STANTON–CHRISTIANA ROAD
STA. 2014+99.76 TO STA. 2015+59.83

(11) STA. 2014+99.76 TO STA. 2015+59.83
SHOULDER TAPERS 10.7" TO 13.67'

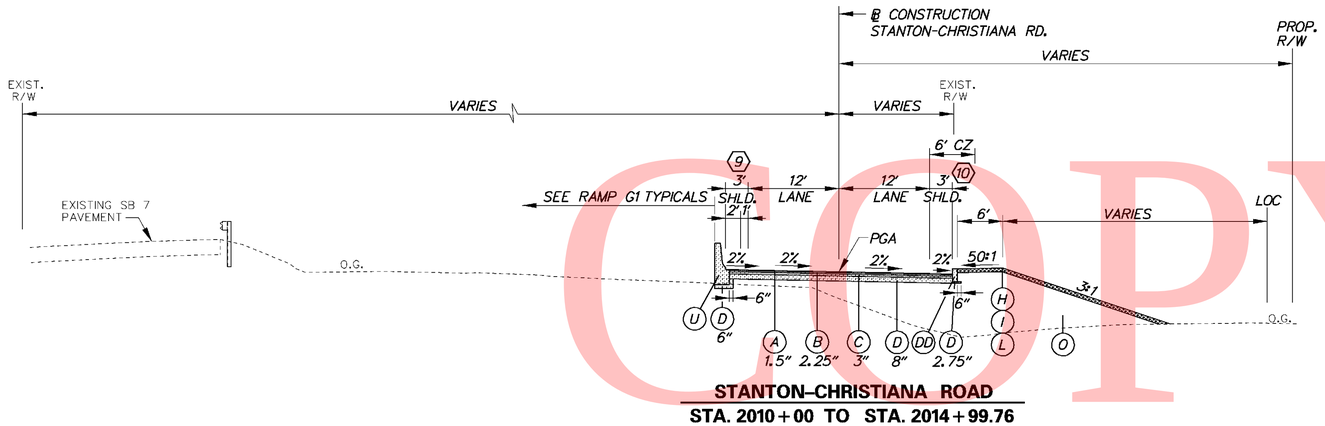

STANTON–CHRISTIANA ROAD
STA. 2010+00 TO STA. 2014+99.76

(9) STA. 2013+69.09 TO STA. 2014+99.76
SHOULDER TAPERS 3' TO 11.52'

(10) STA. 2013+69.09 TO STA. 2014+99.76
SHOULDER TAPERS 3' TO 10.7'

LEGEND

- (A) ITEM 401708 - SUPERPAVE, TYPE C HOT-MIX, 160 GYRATIONS, PG 70-22 (NON-CARBONATE STONE)
- (B) ITEM 401654 - SUPERPAVE, TYPE B HOT-MIX, 160 GYRATIONS, PG 70-22
- (C) ITEM 401663 - SUPERPAVE, BITUMINOUS CONCRETE BASE COURSE, 160 GYRATIONS, PG 64-22
- (D) ITEM 302007 - GRADED AGGREGATE BASE COURSE, TYPE B
- (E) ITEM 401711 - SUPERPAVE, TYPE C HOT-MIX, 160 GYRATIONS, PG 76-22 (NON-CARBONATE STONE)
- (F) ITEM 401660 - SUPERPAVE, TYPE B HOT-MIX, 160 GYRATIONS, PG 76-22
- (G) ITEM 501006 - PORTLAND CEMENT CONCRETE PAVEMENT, 12"
- (H) ITEM 732002 - TOPSOIL, 6" DEPTH
- (I) ITEM 734013 - PERMANENT GRASS SEEDING, DRY GROUND
- (J) ITEM 602017 - PCC MASONRY, PARAPET, CLASS A
- (K) ITEM 735533 - SOIL RETENTION BLANKET MULCH, TYPE 3
- (L) ITEM 735534 - SOIL RETENTION BLANKET MULCH, TYPE 4
- (M) ITEM 735535 - SOIL RETENTION BLANKET MULCH, TYPE 5, UNLESS OTHERWISE NOTED, SEE DRAINAGE PLANS FOR LIMITS AND TYPE
- (N) ITEM 209001 - BORROW, TYPE A
- (O) ITEM 209006 - BORROW, TYPE F OR APPROVED PROJECT EXCAVATION
- (P) ITEM 715001 - PERFORATED PIPE UNDERDRAINS, 6"
- (Q) ITEM 760504 - RUMBLE STRIPS, HOT-MIX
- (R) ITEM 602772 - MECHANICALLY STABILIZED EARTH WALLS
- (S) ITEM 602773 - PCC MASONRY FOR MECHANICALLY STABILIZED EARTH WALLS
- (T) ITEM ~~720512~~ 3 720529 - PCC SAFETY BARRIER PERMANENT, SINGLE FACE
- (U) ITEM 720654 - PCC SAFETY BARRIER PERMANENT, SINGLE FACE, MODIFIED TYPE 1
- (V) ITEM 720587 - PCC SAFETY BARRIER PERMANENT, DOUBLE FACE, MODIFIED
- (W) ITEM 720655 - PCC SAFETY BARRIER PERMANENT, SINGLE FACE, MODIFIED TYPE 2
- (X) ITEM 712005 - RIPRAP, R-4
- (Y) ITEM 401665 - SUPERPAVE, TYPE C HOT-MIX, 160 GYRATIONS, PG 64-22, PATCHING
- (Z) ITEM 401666 - SUPERPAVE, TYPE B HOT-MIX, 160 GYRATIONS, PG 64-22, PATCHING
- (AA) ITEM 401667 - SUPERPAVE, BITUMINOUS CONCRETE BASE COURSE, 160 GYRATIONS, PG 64-22, PATCHING
- (BB) ITEM 302008 - GRADED AGGREGATE BASE COURSE, TYPE B, PATCHING
- (CC) ITEM 755000 - HOT-MIX, HOT LAID, BITUMINOUS CONCRETE CURB
- (DD) ITEM 701010 - PORTLAND CEMENT CONCRETE CURB, TYPE 1
- (EE) ITEM 701011 - PORTLAND CEMENT CONCRETE CURB, TYPE 2
- (FF) ITEM 701020 - INTEGRAL PORTLAND CEMENT CONCRETE CURB AND GUTTER, TYPE 1
- (GG) ITEM 701023 - INTEGRAL PORTLAND CEMENT CONCRETE CURB AND GUTTER, TYPE 4
- (HH) ITEM 701026 - PORTLAND CEMENT CONCRETE MONOLITHIC MEDIAN
- (II) ITEM 701027 - PORTLAND CEMENT CONCRETE CURB, TYPE 1 MODIFIED
- (JJ) ITEM 720658 - PCC SAFETY BARRIER PERMANENT SINGLE FACE, MODIFIED, TYPE 5
- (KK) ITEM 720050 - GALVANIZED STEEL BEAM GUARDRAIL, TYPE 1
- (LL) ITEM 760507 - PROFILE MILLING, HOT-MIX
- (MM) ITEM 720656 - PCC SAFETY BARRIER PERMANENT, SINGLE FACE, MODIFIED, TYPE 3
- (NN) ITEM 720657 - PCC SAFETY BARRIER PERMANENT, SINGLE FACE, MODIFIED, TYPE 4
- (OO) ITEM 720651 - PCC SAFETY BARRIER PERMANENT, DOUBLE FACE, BIFURCATED, TYPE 1
- (PP) ITEM 720652 - PCC SAFETY BARRIER PERMANENT, DOUBLE FACE, BIFURCATED, TYPE 2
- (RR) ITEM 401668 - SUPERPAVE, TYPE C HOT-MIX, 160 GYRATIONS, PG 64-22, WEDGE
- (SS) ITEM 401669 - SUPERPAVE, TYPE B HOT-MIX, 160 GYRATIONS, PG 64-22, WEDGE

PAVEMENT LIFT NOTE:

THE MAXIMUM LIFTS FOR THE INDIVIDUAL PAVING MATERIAL ARE AS FOLLOWS:
SUPERPAVE, TYPE C HOT-MIX - 2"
SUPERPAVE, TYPE B HOT-MIX - 3"
SUPERPAVE, BIT. CONC. BASE COURSE - 6"
GRADED AGGREGATE BASE COURSE - 8"

NOTES:

1) THE PGA IS APPLIED TO THE TOP OF THE FINAL PAVEMENT SURFACE.

UNOFFICIAL WEBSITE COPY

2/15/2011 11:53:46 AM
M:\PROJECTS\2003\03059_DELTRNPK\SRIMALL\CADD\2809003\PLANS\TS11_SR1DGN

DELAWARE DEPARTMENT OF TRANSPORTATION	ADDENDUMS / REVISIONS	NOT TO SCALE	SR1 / I–95 INTERCHANGE	CONTRACT 28-090-03	BRIDGE NO.	TYPICAL SECTIONS	SHEET NO. 16
	ADDENDUM NO. 3 CHANGED ITEM NO., 02/18/2011, RLS			COUNTY NEW CASTLE	DESIGNED BY:		TOTAL SHTS. 803
					CHECKED BY:		

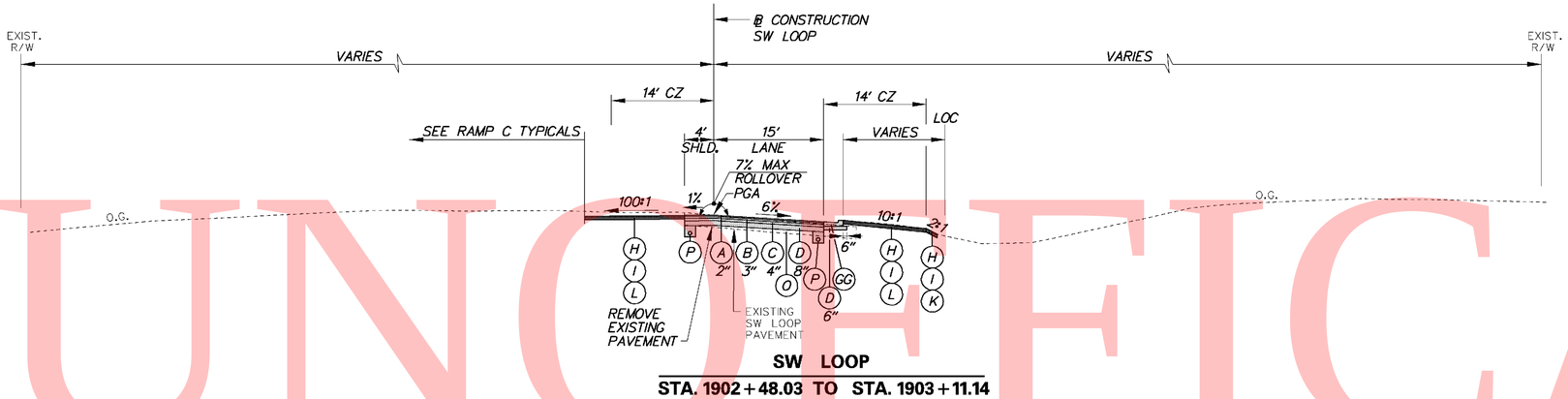

SW LOOP

STA. 1902+48.03 TO STA. 1903+11.14

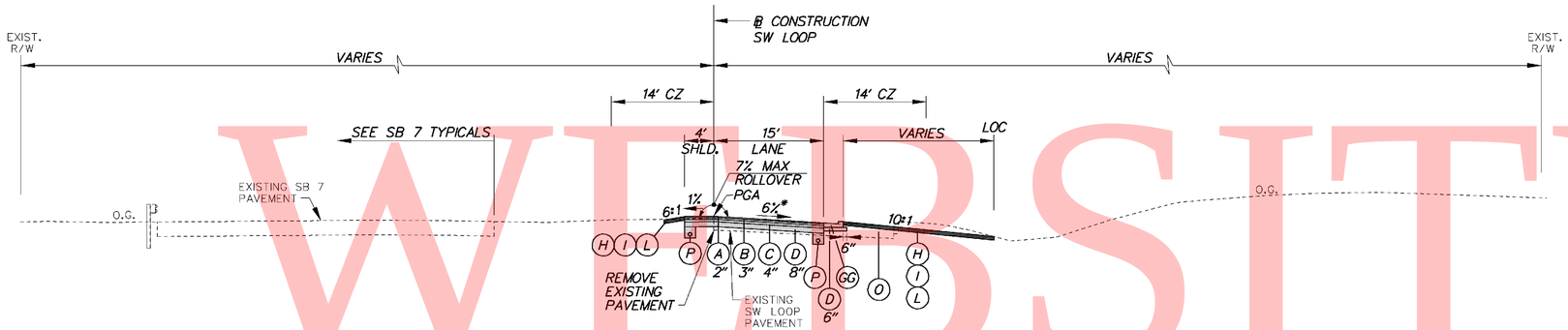

SW LOOP

STA. 1901+54.52 TO STA. 1902+48.03

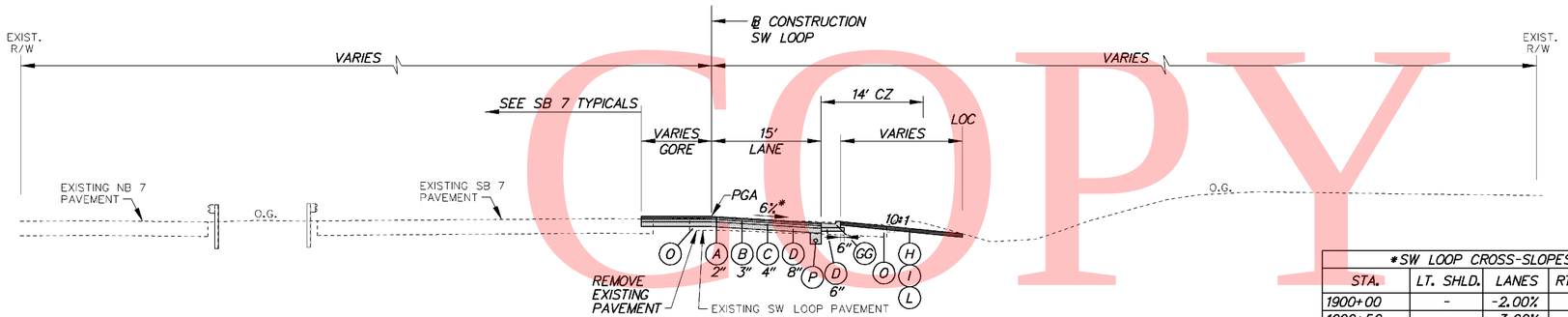

SW LOOP

STA. 1900+00 TO STA. 1901+54.52

*SW LOOP CROSS-SLOPES			
STA.	LT. SHLD.	LANES	RT. OF CURB
1900+00	-	-2.00%	-
1900+50	-	-3.92%	-
1901+00	-	-5.85%	-
1901+04.00	-	-6.00%	-
1901+50	-	-6.00%	-
1901+54.52	-1.00%	-6.00%	-

LEGEND

- (A) ITEM 401708 - SUPERPAVE, TYPE C HOT-MIX, 160 GYRATIONS, PG 70-22 (NON-CARBONATE STONE)
- (B) ITEM 401654 - SUPERPAVE, TYPE B HOT-MIX, 160 GYRATIONS, PG 70-22
- (C) ITEM 401663 - SUPERPAVE, BITUMINOUS CONCRETE BASE COURSE, 160 GYRATIONS, PG 64-22
- (D) ITEM 302007 - GRADED AGGREGATE BASE COURSE, TYPE B
- (E) ITEM 401711 - SUPERPAVE, TYPE C HOT-MIX, 160 GYRATIONS, PG 76-22 (NON-CARBONATE STONE)
- (F) ITEM 401660 - SUPERPAVE, TYPE B HOT-MIX, 160 GYRATIONS, PG 76-22
- (G) ITEM 501006 - PORTLAND CEMENT CONCRETE PAVEMENT, 12"
- (H) ITEM 732002 - TOPSOIL, 6" DEPTH
- (I) ITEM 734013 - PERMANENT GRASS SEEDING, DRY GROUND
- (J) ITEM 602017 - PCC MASONRY, PARAPET, CLASS A
- (K) ITEM 735533 - SOIL RETENTION BLANKET MULCH, TYPE 3
- (L) ITEM 735534 - SOIL RETENTION BLANKET MULCH, TYPE 4
- (M) ITEM 735535 - SOIL RETENTION BLANKET MULCH, TYPE 5, UNLESS OTHERWISE NOTED, SEE DRAINAGE PLANS FOR LIMITS AND TYPE
- (N) ITEM 209001 - BORROW, TYPE A
- (O) ITEM 209006 - BORROW, TYPE F OR APPROVED PROJECT EXCAVATION
- (P) ITEM 715001 - PERFORATED PIPE UNDERDRAINS, 6"
- (Q) ITEM 760504 - RUMBLE STRIPS, HOT-MIX
- (R) ITEM 602772 - MECHANICALLY STABILIZED EARTH WALLS
- (S) ITEM 602773 - PCC MASONRY FOR MECHANICALLY STABILIZED EARTH WALLS
- (T) ITEM ~~720512~~ 3 720529 - PCC SAFETY BARRIER PERMANENT, SINGLE FACE
- (U) ITEM 720654 - PCC SAFETY BARRIER PERMANENT, SINGLE FACE, MODIFIED TYPE 1
- (V) ITEM 720587 - PCC SAFETY BARRIER PERMANENT, DOUBLE FACE, MODIFIED
- (W) ITEM 720655 - PCC SAFETY BARRIER PERMANENT, SINGLE FACE, MODIFIED TYPE 2
- (X) ITEM 712005 - RIPRAP, R-4
- (Y) ITEM 401665 - SUPERPAVE, TYPE C HOT-MIX, 160 GYRATIONS, PG 64-22, PATCHING
- (Z) ITEM 401666 - SUPERPAVE, TYPE B HOT-MIX, 160 GYRATIONS, PG 64-22, PATCHING
- (AA) ITEM 401667 - SUPERPAVE, BITUMINOUS CONCRETE BASE COURSE, 160 GYRATIONS, PG 64-22, PATCHING
- (BB) ITEM 302008 - GRADED AGGREGATE BASE COURSE, TYPE B, PATCHING
- (CC) ITEM 755000 - HOT-MIX, HOT LAID, BITUMINOUS CONCRETE CURB
- (DD) ITEM 701010 - PORTLAND CEMENT CONCRETE CURB, TYPE 1
- (EE) ITEM 701011 - PORTLAND CEMENT CONCRETE CURB, TYPE 2
- (FF) ITEM 701020 - INTEGRAL PORTLAND CEMENT CONCRETE CURB AND GUTTER, TYPE 1
- (GG) ITEM 701023 - INTEGRAL PORTLAND CEMENT CONCRETE CURB AND GUTTER, TYPE 4
- (HH) ITEM 701026 - PORTLAND CEMENT CONCRETE MONOLITHIC MEDIAN
- (II) ITEM 701027 - PORTLAND CEMENT CONCRETE CURB, TYPE 1 MODIFIED
- (JJ) ITEM 720658 - PCC SAFETY BARRIER PERMANENT SINGLE FACE, MODIFIED, TYPE 5
- (KK) ITEM 720050 - GALVANIZED STEEL BEAM GUARDRAIL, TYPE 1
- (LL) ITEM 760507 - PROFILE MILLING, HOT-MIX
- (MM) ITEM 720656 - PCC SAFETY BARRIER PERMANENT, SINGLE FACE, MODIFIED, TYPE 3
- (NN) ITEM 720657 - PCC SAFETY BARRIER PERMANENT, SINGLE FACE, MODIFIED, TYPE 4
- (OO) ITEM 720651 - PCC SAFETY BARRIER PERMANENT, DOUBLE FACE, BIFURCATED, TYPE 1
- (PP) ITEM 720652 - PCC SAFETY BARRIER PERMANENT, DOUBLE FACE, BIFURCATED, TYPE 2
- (RR) ITEM 401668 - SUPERPAVE, TYPE C HOT-MIX, 160 GYRATIONS, PG 64-22, WEDGE
- (SS) ITEM 401669 - SUPERPAVE, TYPE B HOT-MIX, 160 GYRATIONS, PG 64-22, WEDGE

PAVEMENT LIFT NOTE:

THE MAXIMUM LIFTS FOR THE INDIVIDUAL PAVING MATERIAL ARE AS FOLLOWS:
SUPERPAVE, TYPE C HOT-MIX - 2"
SUPERPAVE, TYPE B HOT-MIX - 3"
SUPERPAVE, BIT. CONC. BASE COURSE - 6"
GRADED AGGREGATE BASE COURSE - 8"

NOTES:

1) THE PGA IS APPLIED TO THE TOP OF THE FINAL PAVEMENT SURFACE.

UNOFFICIAL WEBSITE COPY

2/15/2011 11:55:25 AM
M:\PROJECTS\2003\03059_DELTRNPK\SRIMALL\CADD\2809003\PLANS\TS12_SR1.DGN

DELAWARE DEPARTMENT OF TRANSPORTATION

ADDENDUMS / REVISIONS	
ADDENDUM NO. 3 CHANGED ITEM NO.,	
02/18/2011, RLS	

NOT TO SCALE

SR1 / I-95 INTERCHANGE

CONTRACT	BRIDGE NO.	
28-090-03	DESIGNED BY:	
COUNTY	CHECKED BY:	
NEW CASTLE		

TYPICAL SECTIONS

SHEET NO.
17
TOTAL SHTS.
803

UNOFFICIAL WEBSITE COPY

*SW LOOP CROSS-SLOPES		
STA.	LT. SHLD.	LANES
1905+69.99	-1.00%	-6.00%
1906+00	-2.30%	-4.70%
1906+15.99	-3.00%	-4.00%
1906+38.99	-4.00%	-3.00%
1907+25.20	-4.00%	-3.00%
1907+48.20	-3.00%	-4.00%
1907+50	-2.92%	-4.08%
1907+94.20	-1.00%	-6.00%

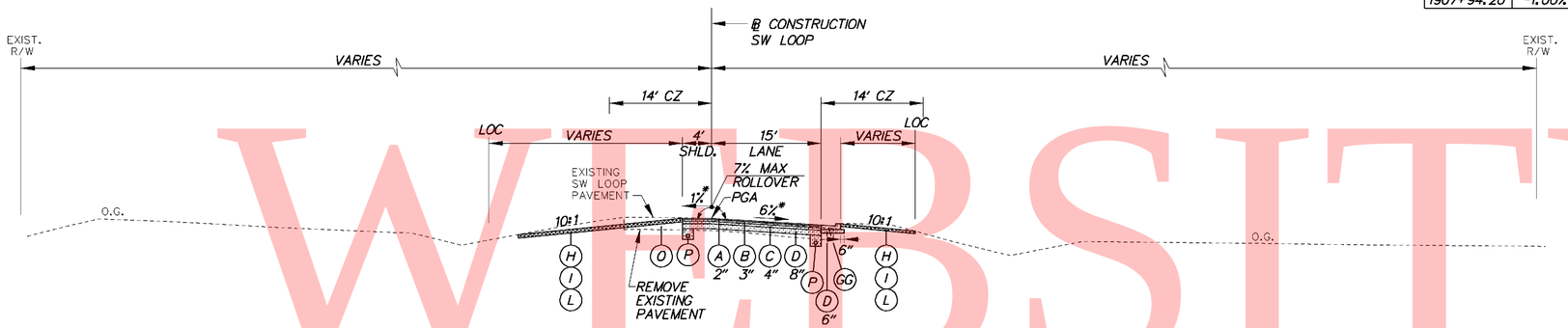

SW LOOP

STA. 1905+50 TO STA. 1910+00

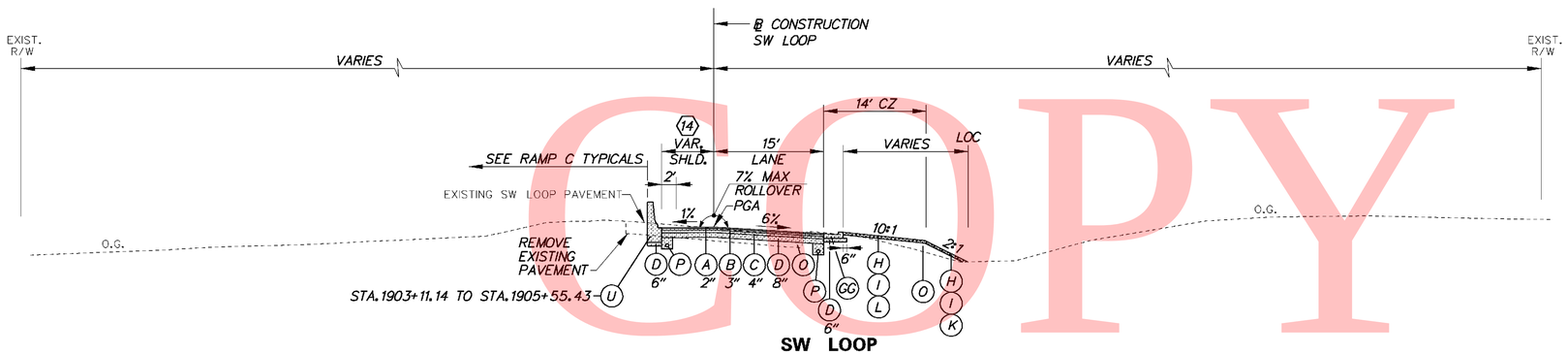

SW LOOP

STA. 1903+11.14 TO STA. 1905+50

(14) STA. 1903+23.95 TO STA. 1904+33.31
SHOULDER TAPERS 12.25' TO 4.25'
STA. 1904+33.31 TO STA. 1905+42.66
SHOULDER TAPERS 4.25' TO 12.25'

LEGEND

- (A) ITEM 401708 - SUPERPAVE, TYPE C HOT-MIX, 160 GYRATIONS, PG 70-22 (NON-CARBONATE STONE)
- (B) ITEM 401654 - SUPERPAVE, TYPE B HOT-MIX, 160 GYRATIONS, PG 70-22
- (C) ITEM 401663 - SUPERPAVE, BITUMINOUS CONCRETE BASE COURSE, 160 GYRATIONS, PG 64-22
- (D) ITEM 302007 - GRADED AGGREGATE BASE COURSE, TYPE B
- (E) ITEM 401711 - SUPERPAVE, TYPE C HOT-MIX, 160 GYRATIONS, PG 76-22 (NON-CARBONATE STONE)
- (F) ITEM 401660 - SUPERPAVE, TYPE B HOT-MIX, 160 GYRATIONS, PG 76-22
- (G) ITEM 501006 - PORTLAND CEMENT CONCRETE PAVEMENT, 12"
- (H) ITEM 732002 - TOPSOIL, 6" DEPTH
- (I) ITEM 734013 - PERMANENT GRASS SEEDING, DRY GROUND
- (J) ITEM 602017 - PCC MASONRY, PARAPET, CLASS A
- (K) ITEM 735533 - SOIL RETENTION BLANKET MULCH, TYPE 3
- (L) ITEM 735534 - SOIL RETENTION BLANKET MULCH, TYPE 4
- (M) ITEM 735535 - SOIL RETENTION BLANKET MULCH, TYPE 5, UNLESS OTHERWISE NOTED, SEE DRAINAGE PLANS FOR LIMITS AND TYPE
- (N) ITEM 209001 - BORROW, TYPE A
- (O) ITEM 209006 - BORROW, TYPE F OR APPROVED PROJECT EXCAVATION
- (P) ITEM 715001 - PERFORATED PIPE UNDERDRAINS, 6"
- (Q) ITEM 760504 - RUMBLE STRIPS, HOT-MIX
- (R) ITEM 602772 - MECHANICALLY STABILIZED EARTH WALLS
- (S) ITEM 602773 - PCC MASONRY FOR MECHANICALLY STABILIZED EARTH WALLS
- (T) ITEM ~~720512~~ 3 720529 - PCC SAFETY BARRIER PERMANENT, SINGLE FACE
- (U) ITEM 720654 - PCC SAFETY BARRIER PERMANENT, SINGLE FACE, MODIFIED TYPE 1
- (V) ITEM 720587 - PCC SAFETY BARRIER PERMANENT, DOUBLE FACE, MODIFIED
- (W) ITEM 720655 - PCC SAFETY BARRIER PERMANENT, SINGLE FACE, MODIFIED TYPE 2
- (X) ITEM 712005 - RIPRAP, R-4
- (Y) ITEM 401665 - SUPERPAVE, TYPE C HOT-MIX, 160 GYRATIONS, PG 64-22, PATCHING
- (Z) ITEM 401666 - SUPERPAVE, TYPE B HOT-MIX, 160 GYRATIONS, PG 64-22, PATCHING
- (AA) ITEM 401667 - SUPERPAVE, BITUMINOUS CONCRETE BASE COURSE, 160 GYRATIONS, PG 64-22, PATCHING
- (BB) ITEM 302008 - GRADED AGGREGATE BASE COURSE, TYPE B, PATCHING
- (CC) ITEM 755000 - HOT-MIX, HOT LAID, BITUMINOUS CONCRETE CURB
- (DD) ITEM 701010 - PORTLAND CEMENT CONCRETE CURB, TYPE 1
- (EE) ITEM 701011 - PORTLAND CEMENT CONCRETE CURB, TYPE 2
- (FF) ITEM 701020 - INTEGRAL PORTLAND CEMENT CONCRETE CURB AND GUTTER, TYPE 1
- (GG) ITEM 701023 - INTEGRAL PORTLAND CEMENT CONCRETE CURB AND GUTTER, TYPE 4
- (HH) ITEM 701026 - PORTLAND CEMENT CONCRETE MONOLITHIC MEDIAN
- (II) ITEM 701027 - PORTLAND CEMENT CONCRETE CURB, TYPE 1 MODIFIED
- (JJ) ITEM 720658 - PCC SAFETY BARRIER PERMANENT SINGLE FACE, MODIFIED, TYPE 5
- (KK) ITEM 720050 - GALVANIZED STEEL BEAM GUARDRAIL, TYPE 1
- (LL) ITEM 760507 - PROFILE MILLING, HOT-MIX
- (MM) ITEM 720656 - PCC SAFETY BARRIER PERMANENT, SINGLE FACE, MODIFIED, TYPE 3
- (NN) ITEM 720657 - PCC SAFETY BARRIER PERMANENT, SINGLE FACE, MODIFIED, TYPE 4
- (OO) ITEM 720651 - PCC SAFETY BARRIER PERMANENT, DOUBLE FACE, BIFURCATED, TYPE 1
- (PP) ITEM 720652 - PCC SAFETY BARRIER PERMANENT, DOUBLE FACE, BIFURCATED, TYPE 2
- (RR) ITEM 401668 - SUPERPAVE, TYPE C HOT-MIX, 160 GYRATIONS, PG 64-22, WEDGE
- (SS) ITEM 401669 - SUPERPAVE, TYPE B HOT-MIX, 160 GYRATIONS, PG 64-22, WEDGE

PAVEMENT LIFT NOTE:

THE MAXIMUM LIFTS FOR THE INDIVIDUAL PAVING MATERIAL ARE AS FOLLOWS:
SUPERPAVE, TYPE C HOT-MIX - 2"
SUPERPAVE, TYPE B HOT-MIX - 3"
SUPERPAVE, BIT. CONC. BASE COURSE - 6"
GRADED AGGREGATE BASE COURSE - 8"

NOTES:

1) THE PGA IS APPLIED TO THE TOP OF THE FINAL PAVEMENT SURFACE.

2/15/2011 3:20:59 PM
M:\PROJECTS\2003\03059_DELTRNPK\SRIMALL\CADD\2809003\PLANS\TS13_SR1.DGN

DELAWARE DEPARTMENT OF TRANSPORTATION	ADDENDUMS / REVISIONS	NOT TO SCALE	SR1 / I-95 INTERCHANGE	CONTRACT 28-090-03	BRIDGE NO.	TYPICAL SECTIONS	SHEET NO. 18
	3 ADDENDUM NO. 3 CHANGED ITEM NO., 02/18/2011, RLS			COUNTY NEW CASTLE	DESIGNED BY:		TOTAL SHTS. 803
					CHECKED BY:		

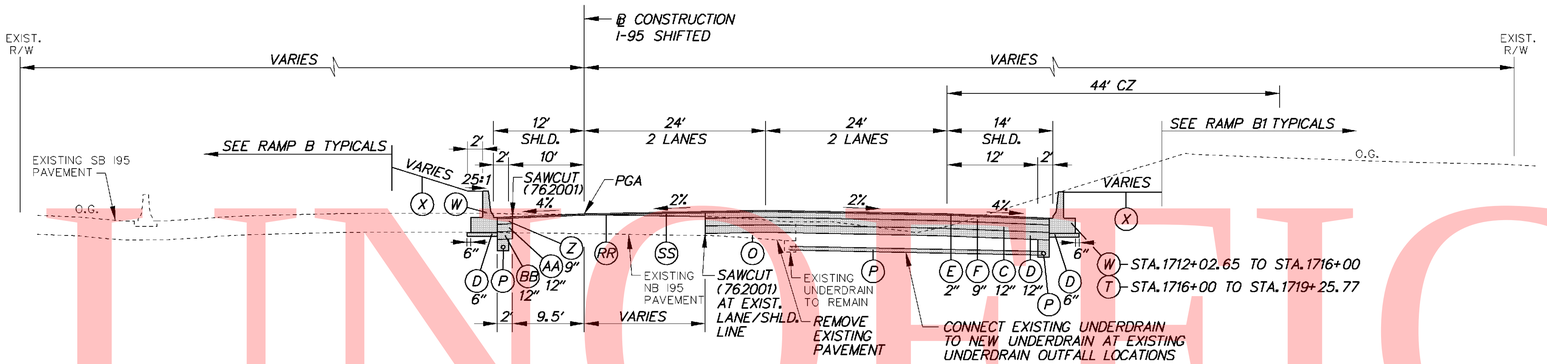

I-95 SHIFTED
STA. 1712+02.65 TO STA. 1719+25.77

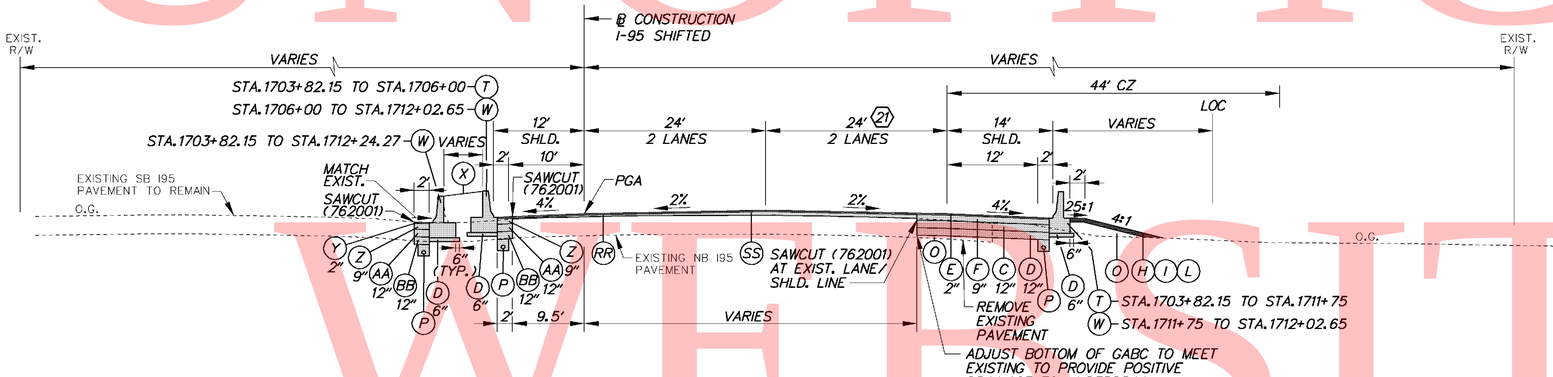

I-95 SHIFTED
STA. 1703+82.15 TO STA. 1712+02.65

(21) STA. 1703+82.15 TO STA. 1704+75
WIDTH TAPERS 28.38' TO 24'

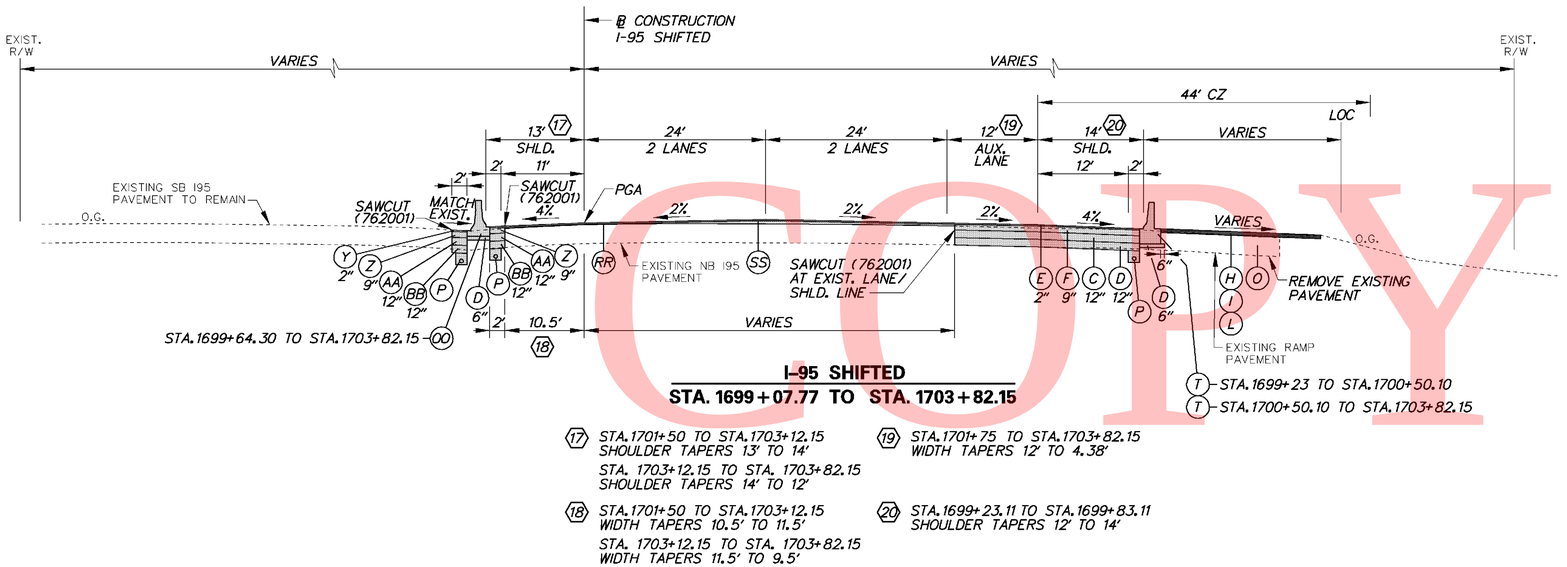

I-95 SHIFTED
STA. 1699+07.77 TO STA. 1703+82.15

(17) STA. 1701+50 TO STA. 1703+12.15
SHOULDER TAPERS 13' TO 14'
STA. 1703+12.15 TO STA. 1703+82.15
SHOULDER TAPERS 14' TO 12'

(18) STA. 1701+50 TO STA. 1703+12.15
WIDTH TAPERS 10.5' TO 11.5'
STA. 1703+12.15 TO STA. 1703+82.15
WIDTH TAPERS 11.5' TO 9.5'

(19) STA. 1701+75 TO STA. 1703+82.15
WIDTH TAPERS 12' TO 4.38'

(20) STA. 1699+23.11 TO STA. 1699+83.11
SHOULDER TAPERS 12' TO 14'

LEGEND

- (A) ITEM 401708 - SUPERPAVE, TYPE C HOT-MIX, 160 GYRATIONS, PG 70-22 (NON-CARBONATE STONE)
- (B) ITEM 401654 - SUPERPAVE, TYPE B HOT-MIX, 160 GYRATIONS, PG 70-22
- (C) ITEM 401663 - SUPERPAVE, BITUMINOUS CONCRETE BASE COURSE, 160 GYRATIONS, PG 64-22
- (D) ITEM 302007 - GRADED AGGREGATE BASE COURSE, TYPE B
- (E) ITEM 401711 - SUPERPAVE, TYPE C HOT-MIX, 160 GYRATIONS, PG 76-22 (NON-CARBONATE STONE)
- (F) ITEM 401660 - SUPERPAVE, TYPE B HOT-MIX, 160 GYRATIONS, PG 76-22
- (G) ITEM 501006 - PORTLAND CEMENT CONCRETE PAVEMENT, 12"
- (H) ITEM 732002 - TOPSOIL, 6" DEPTH
- (I) ITEM 734013 - PERMANENT GRASS SEEDING, DRY GROUND
- (J) ITEM 602017 - PCC MASONRY, PARAPET, CLASS A
- (K) ITEM 735533 - SOIL RETENTION BLANKET MULCH, TYPE 3
- (L) ITEM 735534 - SOIL RETENTION BLANKET MULCH, TYPE 4
- (M) ITEM 735535 - SOIL RETENTION BLANKET MULCH, TYPE 5, UNLESS OTHERWISE NOTED, SEE DRAINAGE PLANS FOR LIMITS AND TYPE
- (N) ITEM 209001 - BORROW, TYPE A
- (O) ITEM 209006 - BORROW, TYPE F OR APPROVED PROJECT EXCAVATION
- (P) ITEM 715001 - PERFORATED PIPE UNDERDRAINS, 6"
- (Q) ITEM 760504 - RUMBLE STRIPS, HOT-MIX
- (R) ITEM 602772 - MECHANICALLY STABILIZED EARTH WALLS
- (S) ITEM 602773 - PCC MASONRY FOR MECHANICALLY STABILIZED EARTH WALLS
- (T) ITEM ~~720512~~ 720529 - PCC SAFETY BARRIER PERMANENT, SINGLE FACE
- (U) ITEM 720654 - PCC SAFETY BARRIER PERMANENT, SINGLE FACE, MODIFIED TYPE 1
- (V) ITEM 720587 - PCC SAFETY BARRIER PERMANENT, DOUBLE FACE, MODIFIED
- (W) ITEM 720655 - PCC SAFETY BARRIER PERMANENT, SINGLE FACE, MODIFIED TYPE 2
- (X) ITEM 712005 - RIPRAP, R-4
- (Y) ITEM 401665 - SUPERPAVE, TYPE C HOT-MIX, 160 GYRATIONS, PG 64-22, PATCHING
- (Z) ITEM 401666 - SUPERPAVE, TYPE B HOT-MIX, 160 GYRATIONS, PG 64-22, PATCHING
- (AA) ITEM 401667 - SUPERPAVE, BITUMINOUS CONCRETE BASE COURSE, 160 GYRATIONS, PG 64-22, PATCHING
- (BB) ITEM 302008 - GRADED AGGREGATE BASE COURSE, TYPE B, PATCHING
- (CC) ITEM 755000 - HOT-MIX, HOT LAID, BITUMINOUS CONCRETE CURB
- (DD) ITEM 701010 - PORTLAND CEMENT CONCRETE CURB, TYPE 1
- (EE) ITEM 701011 - PORTLAND CEMENT CONCRETE CURB, TYPE 2
- (FF) ITEM 701020 - INTEGRAL PORTLAND CEMENT CONCRETE CURB AND GUTTER, TYPE 1
- (GG) ITEM 701023 - INTEGRAL PORTLAND CEMENT CONCRETE CURB AND GUTTER, TYPE 4
- (HH) ITEM 701026 - PORTLAND CEMENT CONCRETE MONOLITHIC MEDIAN
- (II) ITEM 701027 - PORTLAND CEMENT CONCRETE CURB, TYPE 1 MODIFIED
- (JJ) ITEM 720658 - PCC SAFETY BARRIER PERMANENT SINGLE FACE, MODIFIED, TYPE 5
- (KK) ITEM 720050 - GALVANIZED STEEL BEAM GUARDRAIL, TYPE 1
- (LL) ITEM 760507 - PROFILE MILLING, HOT-MIX
- (MM) ITEM 720656 - PCC SAFETY BARRIER PERMANENT, SINGLE FACE, MODIFIED, TYPE 3
- (NN) ITEM 720657 - PCC SAFETY BARRIER PERMANENT, SINGLE FACE, MODIFIED, TYPE 4
- (OO) ITEM 720651 - PCC SAFETY BARRIER PERMANENT, DOUBLE FACE, BIFURCATED, TYPE 1
- (PP) ITEM 720652 - PCC SAFETY BARRIER PERMANENT, DOUBLE FACE, BIFURCATED, TYPE 2
- (RR) ITEM 401668 - SUPERPAVE, TYPE C HOT-MIX, 160 GYRATIONS, PG 64-22, WEDGE
- (SS) ITEM 401669 - SUPERPAVE, TYPE B HOT-MIX, 160 GYRATIONS, PG 64-22, WEDGE

PAVEMENT LIFT NOTE:
THE MAXIMUM LIFTS FOR THE INDIVIDUAL PAVING MATERIAL ARE AS FOLLOWS:
SUPERPAVE, TYPE C HOT-MIX - 2"
SUPERPAVE, TYPE B HOT-MIX - 3"
SUPERPAVE, BIT. CONC. BASE COURSE - 6"
GRADED AGGREGATE BASE COURSE - 8"

NOTES:
1) THE PGA IS APPLIED TO THE TOP OF THE FINAL PAVEMENT SURFACE.

UNOFFICIAL WEBSITE COPY

DELAWARE DEPARTMENT OF TRANSPORTATION	ADDENDUMS / REVISIONS	NOT TO SCALE	SR1 / I-95 INTERCHANGE	CONTRACT 28-090-03	BRIDGE NO.	TYPICAL SECTIONS	SHEET NO. 19
	ADDENDUM NO. 3 CHANGED ITEM NO., 02/18/2011, RLS			COUNTY NEW CASTLE	DESIGNED BY:		TOTAL SHTS. 803
					CHECKED BY:		

2/15/2011 11:57:43 AM
M:\PROJECTS\2003\03059_DELTRNPK\SRIMALL\CADD\2809003\PLANS\TS14_SR1.DGN

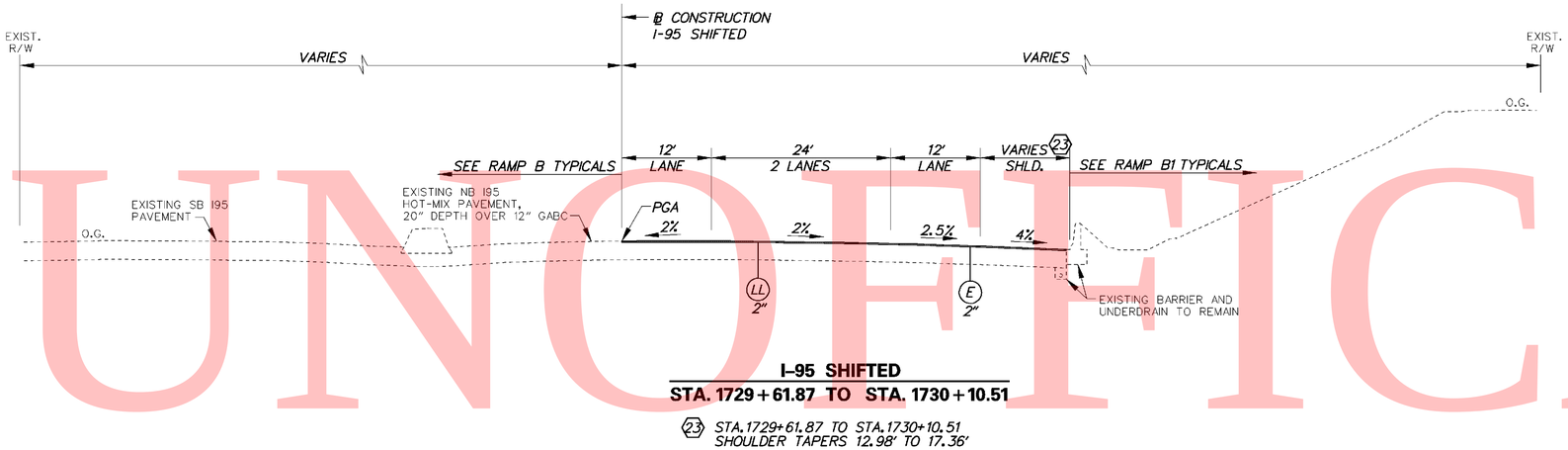

I-95 SHIFTED
STA. 1729+61.87 TO STA. 1730+10.51

23 STA.1729+61.87 TO STA.1730+10.51
SHOULDER TAPERS 12.98' TO 17.36'

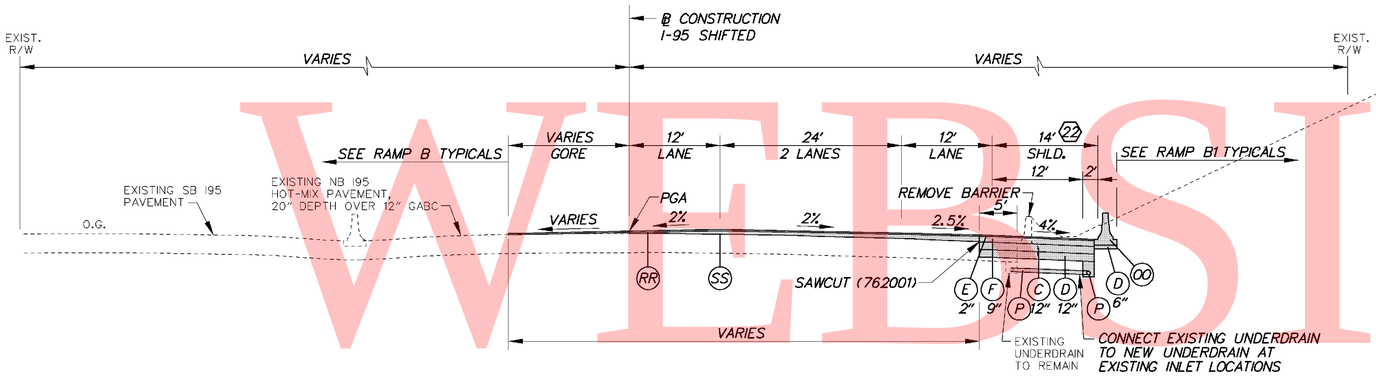

I-95 SHIFTED
STA. 1724+47.59 TO STA. 1729+61.87

22 STA.1729+11.62 TO STA.1729+61.87
SHOULDER TAPERS 14' TO 12.98'

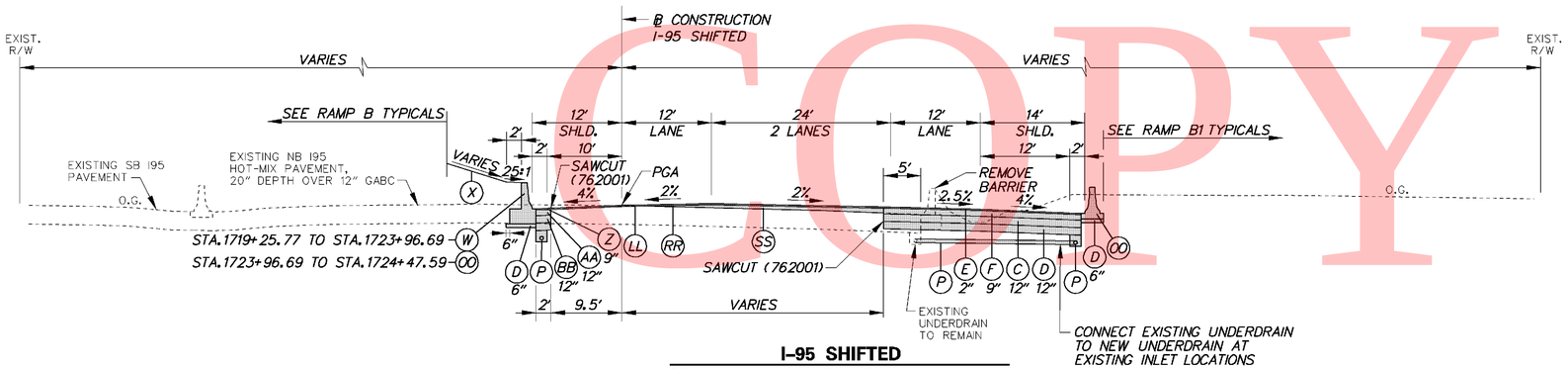

I-95 SHIFTED
STA. 1719+25.77 TO STA. 1724+47.59

LEGEND

- (A) ITEM 401708 - SUPERPAVE, TYPE C HOT-MIX, 160 GYRATIONS, PG 70-22 (NON-CARBONATE STONE)
- (B) ITEM 401654 - SUPERPAVE, TYPE B HOT-MIX, 160 GYRATIONS, PG 70-22
- (C) ITEM 401663 - SUPERPAVE, BITUMINOUS CONCRETE BASE COURSE, 160 GYRATIONS, PG 64-22
- (D) ITEM 302007 - GRADED AGGREGATE BASE COURSE, TYPE B
- (E) ITEM 401711 - SUPERPAVE, TYPE C HOT-MIX, 160 GYRATIONS, PG 76-22 (NON-CARBONATE STONE)
- (F) ITEM 401660 - SUPERPAVE, TYPE B HOT-MIX, 160 GYRATIONS, PG 76-22
- (G) ITEM 501006 - PORTLAND CEMENT CONCRETE PAVEMENT, 12"
- (H) ITEM 732002 - TOPSOIL, 6" DEPTH
- (I) ITEM 734013 - PERMANENT GRASS SEEDING, DRY GROUND
- (J) ITEM 602017 - PCC MASONRY, PARAPET, CLASS A
- (K) ITEM 735533 - SOIL RETENTION BLANKET MULCH, TYPE 3
- (L) ITEM 735534 - SOIL RETENTION BLANKET MULCH, TYPE 4
- (M) ITEM 735535 - SOIL RETENTION BLANKET MULCH, TYPE 5, UNLESS OTHERWISE NOTED, SEE DRAINAGE PLANS FOR LIMITS AND TYPE
- (N) ITEM 209001 - BORROW, TYPE A
- (O) ITEM 209006 - BORROW, TYPE F OR APPROVED PROJECT EXCAVATION
- (P) ITEM 715001 - PERFORATED PIPE UNDERDRAINS, 6"
- (Q) ITEM 760504 - RUMBLE STRIPS, HOT-MIX
- (R) ITEM 602772 - MECHANICALLY STABILIZED EARTH WALLS
- (S) ITEM 602773 - PCC MASONRY FOR MECHANICALLY STABILIZED EARTH WALLS
- (T) ITEM ~~720512~~ 720529 - PCC SAFETY BARRIER PERMANENT, SINGLE FACE
- (U) ITEM 720654 - PCC SAFETY BARRIER PERMANENT, SINGLE FACE, MODIFIED TYPE 1
- (V) ITEM 720587 - PCC SAFETY BARRIER PERMANENT, DOUBLE FACE, MODIFIED
- (W) ITEM 720655 - PCC SAFETY BARRIER PERMANENT, SINGLE FACE, MODIFIED TYPE 2
- (X) ITEM 712005 - RIPRAP, R-4
- (Y) ITEM 401665 - SUPERPAVE, TYPE C HOT-MIX, 160 GYRATIONS, PG 64-22, PATCHING
- (Z) ITEM 401666 - SUPERPAVE, TYPE B HOT-MIX, 160 GYRATIONS, PG 64-22, PATCHING
- (AA) ITEM 401667 - SUPERPAVE, BITUMINOUS CONCRETE BASE COURSE, 160 GYRATIONS, PG 64-22, PATCHING
- (BB) ITEM 302008 - GRADED AGGREGATE BASE COURSE, TYPE B, PATCHING
- (CC) ITEM 755000 - HOT-MIX, HOT LAID, BITUMINOUS CONCRETE CURB
- (DD) ITEM 701010 - PORTLAND CEMENT CONCRETE CURB, TYPE 1
- (EE) ITEM 701011 - PORTLAND CEMENT CONCRETE CURB, TYPE 2
- (FF) ITEM 701020 - INTEGRAL PORTLAND CEMENT CONCRETE CURB AND GUTTER, TYPE 1
- (GG) ITEM 701023 - INTEGRAL PORTLAND CEMENT CONCRETE CURB AND GUTTER, TYPE 4
- (HH) ITEM 701026 - PORTLAND CEMENT CONCRETE MONOLITHIC MEDIAN
- (II) ITEM 701027 - PORTLAND CEMENT CONCRETE CURB, TYPE 1 MODIFIED
- (JJ) ITEM 720658 - PCC SAFETY BARRIER PERMANENT SINGLE FACE, MODIFIED, TYPE 5
- (KK) ITEM 720050 - GALVANIZED STEEL BEAM GUARDRAIL, TYPE 1
- (LL) ITEM 760507 - PROFILE MILLING, HOT-MIX
- (MM) ITEM 720656 - PCC SAFETY BARRIER PERMANENT, SINGLE FACE, MODIFIED, TYPE 3
- (NN) ITEM 720657 - PCC SAFETY BARRIER PERMANENT, SINGLE FACE, MODIFIED, TYPE 4
- (OO) ITEM 720651 - PCC SAFETY BARRIER PERMANENT, DOUBLE FACE, BIFURCATED, TYPE 1
- (PP) ITEM 720652 - PCC SAFETY BARRIER PERMANENT, DOUBLE FACE, BIFURCATED, TYPE 2
- (RR) ITEM 401668 - SUPERPAVE, TYPE C HOT-MIX, 160 GYRATIONS, PG 64-22, WEDGE
- (SS) ITEM 401669 - SUPERPAVE, TYPE B HOT-MIX, 160 GYRATIONS, PG 64-22, WEDGE

PAVEMENT LIFT NOTE:

THE MAXIMUM LIFTS FOR THE INDIVIDUAL PAVING MATERIAL ARE AS FOLLOWS:
SUPERPAVE, TYPE C HOT-MIX - 2"
SUPERPAVE, TYPE B HOT-MIX - 3"
SUPERPAVE, BIT. CONC. BASE COURSE - 6"
GRADED AGGREGATE BASE COURSE - 8"

NOTES:

1) THE PGA IS APPLIED TO THE TOP OF THE FINAL PAVEMENT SURFACE.

UNOFFICIAL WEBSITE COPY

2/15/2011 12:01:36 PM
M:\PROJECTS\2003\03059_DELTRNPK\SRIMALL\CADD\2809003\PLANS\TS15_SR1.DGN

DELAWARE DEPARTMENT OF TRANSPORTATION	ADDENDUMS / REVISIONS	NOT TO SCALE	SR1 / I-95 INTERCHANGE	CONTRACT 28-090-03	BRIDGE NO.	TYPICAL SECTIONS	SHEET NO. 20
	ADDENDUM NO. 3 CHANGED ITEM NO., 02/18/2011, RLS			COUNTY NEW CASTLE	DESIGNED BY:		TOTAL SHTS. 803
					CHECKED BY:		

UNOFFICIAL WEBSITE COPY

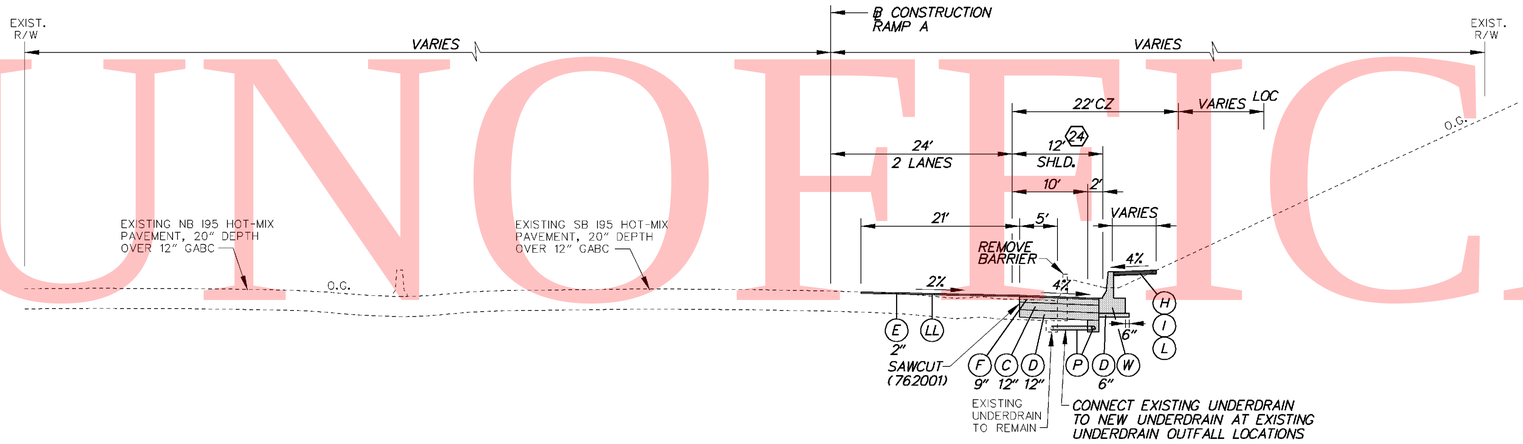

RAMP A

STA. 1210+01.73 TO STA. 1214+42.31

(24) STA. 1210+01.73 TO STA. 1211+82.01 SHOULDER TAPERS 14' TO 12'

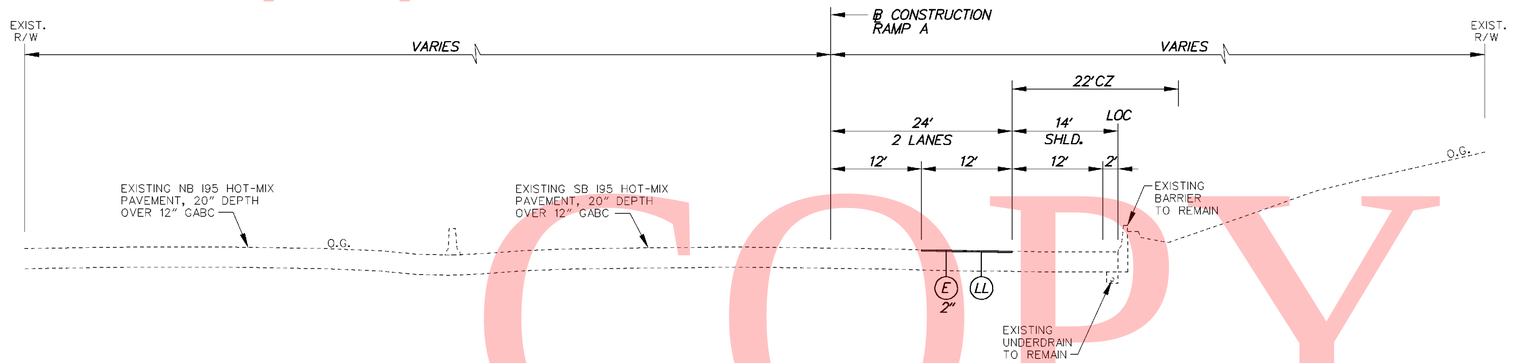

RAMP A

STA. 1209+00 TO STA. 1210+01.73

LEGEND

- (A) ITEM 401708 - SUPERPAVE, TYPE C HOT-MIX, 160 GYRATIONS, PG 70-22 (NON-CARBONATE STONE)
- (B) ITEM 401654 - SUPERPAVE, TYPE B HOT-MIX, 160 GYRATIONS, PG 70-22
- (C) ITEM 401663 - SUPERPAVE, BITUMINOUS CONCRETE BASE COURSE, 160 GYRATIONS, PG 64-22
- (D) ITEM 302007 - GRADED AGGREGATE BASE COURSE, TYPE B
- (E) ITEM 401711 - SUPERPAVE, TYPE C HOT-MIX, 160 GYRATIONS, PG 76-22 (NON-CARBONATE STONE)
- (F) ITEM 401660 - SUPERPAVE, TYPE B HOT-MIX, 160 GYRATIONS, PG 76-22
- (G) ITEM 501006 - PORTLAND CEMENT CONCRETE PAVEMENT, 12"
- (H) ITEM 732002 - TOPSOIL, 6" DEPTH
- (I) ITEM 734013 - PERMANENT GRASS SEEDING, DRY GROUND
- (J) ITEM 602017 - PCC MASONRY, PARAPET, CLASS A
- (K) ITEM 735533 - SOIL RETENTION BLANKET MULCH, TYPE 3
- (L) ITEM 735534 - SOIL RETENTION BLANKET MULCH, TYPE 4
- (M) ITEM 735535 - SOIL RETENTION BLANKET MULCH, TYPE 5, UNLESS OTHERWISE NOTED, SEE DRAINAGE PLANS FOR LIMITS AND TYPE
- (N) ITEM 209001 - BORROW, TYPE A
- (O) ITEM 209006 - BORROW, TYPE F OR APPROVED PROJECT EXCAVATION
- (P) ITEM 715001 - PERFORATED PIPE UNDERDRAINS, 6"
- (Q) ITEM 760504 - RUMBLE STRIPS, HOT-MIX
- (R) ITEM 602772 - MECHANICALLY STABILIZED EARTH WALLS
- (S) ITEM 602773 - PCC MASONRY FOR MECHANICALLY STABILIZED EARTH WALLS
- (T) ITEM ~~720512~~ 3 720529 - PCC SAFETY BARRIER PERMANENT, SINGLE FACE
- (U) ITEM 720654 - PCC SAFETY BARRIER PERMANENT, SINGLE FACE, MODIFIED TYPE 1
- (V) ITEM 720587 - PCC SAFETY BARRIER PERMANENT, DOUBLE FACE, MODIFIED
- (W) ITEM 720655 - PCC SAFETY BARRIER PERMANENT, SINGLE FACE, MODIFIED TYPE 2
- (X) ITEM 712005 - RIPRAP, R-4
- (Y) ITEM 401665 - SUPERPAVE, TYPE C HOT-MIX, 160 GYRATIONS, PG 64-22, PATCHING
- (Z) ITEM 401666 - SUPERPAVE, TYPE B HOT-MIX, 160 GYRATIONS, PG 64-22, PATCHING
- (AA) ITEM 401667 - SUPERPAVE, BITUMINOUS CONCRETE BASE COURSE, 160 GYRATIONS, PG 64-22, PATCHING
- (BB) ITEM 302008 - GRADED AGGREGATE BASE COURSE, TYPE B, PATCHING
- (CC) ITEM 755000 - HOT-MIX, HOT LAID, BITUMINOUS CONCRETE CURB
- (DD) ITEM 701010 - PORTLAND CEMENT CONCRETE CURB, TYPE 1
- (EE) ITEM 701011 - PORTLAND CEMENT CONCRETE CURB, TYPE 2
- (FF) ITEM 701020 - INTEGRAL PORTLAND CEMENT CONCRETE CURB AND GUTTER, TYPE 1
- (GG) ITEM 701023 - INTEGRAL PORTLAND CEMENT CONCRETE CURB AND GUTTER, TYPE 4
- (HH) ITEM 701026 - PORTLAND CEMENT CONCRETE MONOLITHIC MEDIAN
- (II) ITEM 701027 - PORTLAND CEMENT CONCRETE CURB, TYPE 1 MODIFIED
- (JJ) ITEM 720658 - PCC SAFETY BARRIER PERMANENT SINGLE FACE, MODIFIED, TYPE 5
- (KK) ITEM 720050 - GALVANIZED STEEL BEAM GUARDRAIL, TYPE 1
- (LL) ITEM 760507 - PROFILE MILLING, HOT-MIX
- (MM) ITEM 720656 - PCC SAFETY BARRIER PERMANENT, SINGLE FACE, MODIFIED, TYPE 3
- (NN) ITEM 720657 - PCC SAFETY BARRIER PERMANENT, SINGLE FACE, MODIFIED, TYPE 4
- (OO) ITEM 720651 - PCC SAFETY BARRIER PERMANENT, DOUBLE FACE, BIFURCATED, TYPE 1
- (PP) ITEM 720652 - PCC SAFETY BARRIER PERMANENT, DOUBLE FACE, BIFURCATED, TYPE 2
- (RR) ITEM 401668 - SUPERPAVE, TYPE C HOT-MIX, 160 GYRATIONS, PG 64-22, WEDGE
- (SS) ITEM 401669 - SUPERPAVE, TYPE B HOT-MIX, 160 GYRATIONS, PG 64-22, WEDGE

PAVEMENT LIFT NOTE:

THE MAXIMUM LIFTS FOR THE INDIVIDUAL PAVING MATERIAL ARE AS FOLLOWS:
SUPERPAVE, TYPE C HOT-MIX - 2"
SUPERPAVE, TYPE B HOT-MIX - 3"
SUPERPAVE, BIT. CONC. BASE COURSE - 6"
GRADED AGGREGATE BASE COURSE - 8"

NOTES:

1) THE PGA IS APPLIED TO THE TOP OF THE FINAL PAVEMENT SURFACE.

2/15/2011 12:04:49 PM
M:\PROJECTS\2003\03059_DELTRNPK\SRIMALL\CADD\2809003\PLANS\TS15A_SR1.DGN

DELAWARE DEPARTMENT OF TRANSPORTATION

ADDENDUMS / REVISIONS	
ADDENDUM NO. 3 CHANGED ITEM NO., 02/18/2011, RLS	

NOT TO SCALE

SR1 / I-95 INTERCHANGE

CONTRACT	28-090-03
COUNTY	NEW CASTLE
BRIDGE NO.	
DESIGNED BY:	
CHECKED BY:	

TYPICAL SECTIONS

SHEET NO.	21
TOTAL SHTS.	803

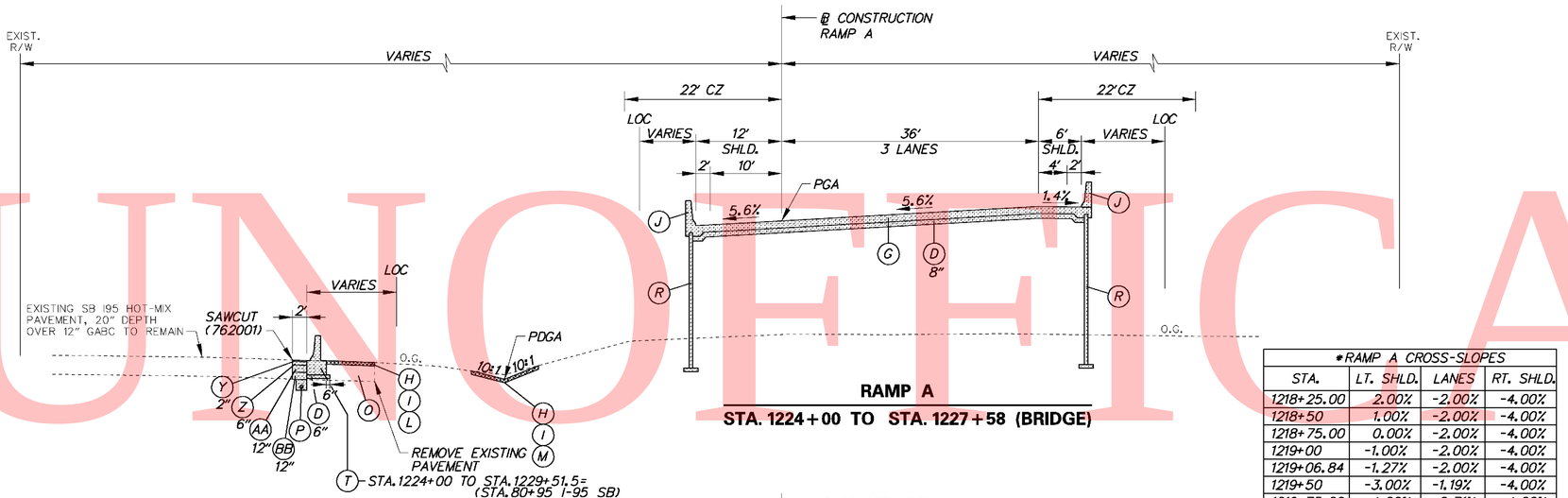

RAMP A

STA. 1224+00 TO STA. 1227+58 (BRIDGE)

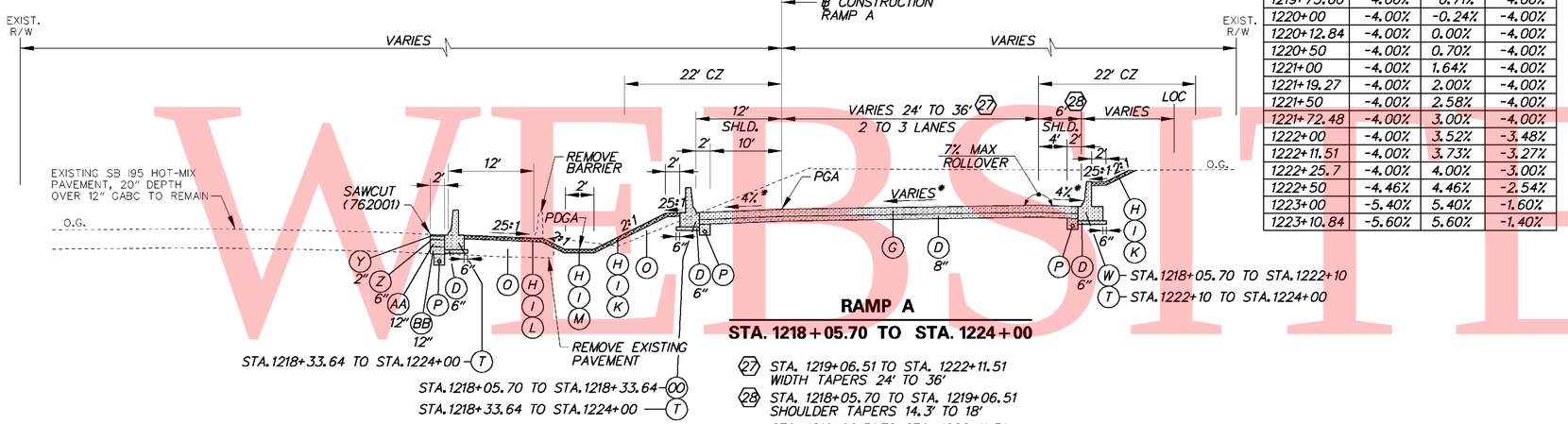

RAMP A

STA. 1218+05.70 TO STA. 1224+00

(27) STA. 1219+06.51 TO STA. 1222+11.51
WIDTH TAPERS 24' TO 36'

(28) STA. 1218+05.70 TO STA. 1219+06.51
SHOULDER TAPERS 14.3' TO 18'
STA. 1219+06.51 TO STA. 1222+11.51
SHOULDER TAPERS 18' TO 6'

*RAMP A CROSS-SLOPES

STA.	LT. SHLD.	LANES	RT. SHLD.
1218+25.00	2.00%	-2.00%	-4.00%
1218+50	1.00%	-2.00%	-4.00%
1218+75.00	0.00%	-2.00%	-4.00%
1219+00	-1.00%	-2.00%	-4.00%
1219+06.84	-1.27%	-2.00%	-4.00%
1219+50	-3.00%	-1.19%	-4.00%
1219+75.00	-4.00%	-0.71%	-4.00%
1220+00	-4.00%	-0.24%	-4.00%
1220+12.84	-4.00%	0.00%	-4.00%
1220+50	-4.00%	0.70%	-4.00%
1221+00	-4.00%	1.64%	-4.00%
1221+19.27	-4.00%	2.00%	-4.00%
1221+50	-4.00%	2.58%	-4.00%
1221+72.48	-4.00%	3.00%	-4.00%
1222+00	-4.00%	3.52%	-3.48%
1222+11.51	-4.00%	3.73%	-3.27%
1222+25.7	-4.00%	4.00%	-3.00%
1222+50	-4.46%	4.46%	-2.54%
1223+00	-5.40%	5.40%	-1.60%
1223+10.84	-5.60%	5.60%	-1.40%

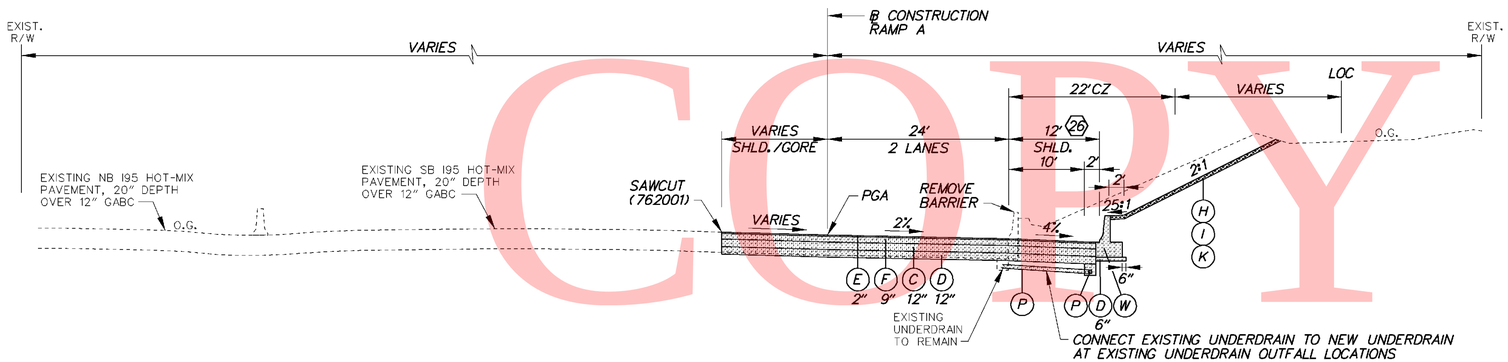

RAMP A

STA. 1214+42.31 TO STA. 1218+05.70

(26) STA. 1217+55.84 TO STA. 1218+05.70
SHOULDER TAPERS 12' TO 14.3'

LEGEND

- (A) ITEM 401708 - SUPERPAVE, TYPE C HOT-MIX, 160 GYRATIONS, PG 70-22 (NON-CARBONATE STONE)
- (B) ITEM 401654 - SUPERPAVE, TYPE B HOT-MIX, 160 GYRATIONS, PG 70-22
- (C) ITEM 401663 - SUPERPAVE, BITUMINOUS CONCRETE BASE COURSE, 160 GYRATIONS, PG 64-22
- (D) ITEM 302007 - GRADED AGGREGATE BASE COURSE, TYPE B
- (E) ITEM 401711 - SUPERPAVE, TYPE C HOT-MIX, 160 GYRATIONS, PG 76-22 (NON-CARBONATE STONE)
- (F) ITEM 401660 - SUPERPAVE, TYPE B HOT-MIX, 160 GYRATIONS, PG 76-22
- (G) ITEM 501006 - PORTLAND CEMENT CONCRETE PAVEMENT, 12"
- (H) ITEM 732002 - TOPSOIL, 6" DEPTH
- (I) ITEM 734013 - PERMANENT GRASS SEEDING, DRY GROUND
- (J) ITEM 602017 - PCC MASONRY, PARAPET, CLASS A
- (K) ITEM 735533 - SOIL RETENTION BLANKET MULCH, TYPE 3
- (L) ITEM 735534 - SOIL RETENTION BLANKET MULCH, TYPE 4
- (M) ITEM 735535 - SOIL RETENTION BLANKET MULCH, TYPE 5, UNLESS OTHERWISE NOTED, SEE DRAINAGE PLANS FOR LIMITS AND TYPE
- (N) ITEM 209001 - BORROW, TYPE A
- (O) ITEM 209006 - BORROW, TYPE F OR APPROVED PROJECT EXCAVATION
- (P) ITEM 715001 - PERFORATED PIPE UNDERDRAINS, 6"
- (Q) ITEM 760504 - RUMBLE STRIPS, HOT-MIX
- (R) ITEM 602772 - MECHANICALLY STABILIZED EARTH WALLS
- (S) ITEM 602773 - PCC MASONRY FOR MECHANICALLY STABILIZED EARTH WALLS
- (T) ITEM ~~720512~~ 720529 - PCC SAFETY BARRIER PERMANENT, SINGLE FACE
- (U) ITEM 720654 - PCC SAFETY BARRIER PERMANENT, SINGLE FACE, MODIFIED TYPE 1
- (V) ITEM 720587 - PCC SAFETY BARRIER PERMANENT, DOUBLE FACE, MODIFIED
- (W) ITEM 720655 - PCC SAFETY BARRIER PERMANENT, SINGLE FACE, MODIFIED TYPE 2
- (X) ITEM 712005 - RIPRAP, R-4
- (Y) ITEM 401665 - SUPERPAVE, TYPE C HOT-MIX, 160 GYRATIONS, PG 64-22, PATCHING
- (Z) ITEM 401666 - SUPERPAVE, TYPE B HOT-MIX, 160 GYRATIONS, PG 64-22, PATCHING
- (AA) ITEM 401667 - SUPERPAVE, BITUMINOUS CONCRETE BASE COURSE, 160 GYRATIONS, PG 64-22, PATCHING
- (BB) ITEM 302008 - GRADED AGGREGATE BASE COURSE, TYPE B, PATCHING
- (CC) ITEM 755000 - HOT-MIX, HOT LAID, BITUMINOUS CONCRETE CURB
- (DD) ITEM 701010 - PORTLAND CEMENT CONCRETE CURB, TYPE 1
- (EE) ITEM 701011 - PORTLAND CEMENT CONCRETE CURB, TYPE 2
- (FF) ITEM 701020 - INTEGRAL PORTLAND CEMENT CONCRETE CURB AND GUTTER, TYPE 1
- (GG) ITEM 701023 - INTEGRAL PORTLAND CEMENT CONCRETE CURB AND GUTTER, TYPE 4
- (HH) ITEM 701026 - PORTLAND CEMENT CONCRETE MONOLITHIC MEDIAN
- (II) ITEM 701027 - PORTLAND CEMENT CONCRETE CURB, TYPE 1 MODIFIED
- (JJ) ITEM 720658 - PCC SAFETY BARRIER PERMANENT SINGLE FACE, MODIFIED, TYPE 5
- (KK) ITEM 720050 - GALVANIZED STEEL BEAM GUARDRAIL, TYPE 1
- (LL) ITEM 760507 - PROFILE MILLING, HOT-MIX
- (MM) ITEM 720656 - PCC SAFETY BARRIER PERMANENT, SINGLE FACE, MODIFIED, TYPE 3
- (NN) ITEM 720657 - PCC SAFETY BARRIER PERMANENT, SINGLE FACE, MODIFIED, TYPE 4
- (OO) ITEM 720651 - PCC SAFETY BARRIER PERMANENT, DOUBLE FACE, BIFURCATED, TYPE 1
- (PP) ITEM 720652 - PCC SAFETY BARRIER PERMANENT, DOUBLE FACE, BIFURCATED, TYPE 2
- (RR) ITEM 401668 - SUPERPAVE, TYPE C HOT-MIX, 160 GYRATIONS, PG 64-22, WEDGE
- (SS) ITEM 401669 - SUPERPAVE, TYPE B HOT-MIX, 160 GYRATIONS, PG 64-22, WEDGE

PAVEMENT LIFT NOTE:

THE MAXIMUM LIFTS FOR THE INDIVIDUAL PAVING MATERIAL ARE AS FOLLOWS:
SUPERPAVE, TYPE C HOT-MIX - 2"
SUPERPAVE, TYPE B HOT-MIX - 3"
SUPERPAVE, BIT. CONC. BASE COURSE - 6"
GRADED AGGREGATE BASE COURSE - 8"

NOTES:

1) THE PGA IS APPLIED TO THE TOP OF THE FINAL PAVEMENT SURFACE.

UNOFFICIAL WEBSITE COPY

2/15/2011 3:36:27 PM
M:\PROJECTS\2003\03059_DELTRNPK\SRTMALL\CADD\2809003\PLANS\TS16_SR1.DGN

DELAWARE DEPARTMENT OF TRANSPORTATION	ADDENDUMS / REVISIONS	NOT TO SCALE	SR1 / I-95 INTERCHANGE	CONTRACT 28-090-03	BRIDGE NO.	TYPICAL SECTIONS	SHEET NO. 22
	ADDENDUM NO. 3 CHANGED ITEM NO., 02/18/2011, RLS			COUNTY NEW CASTLE	DESIGNED BY:		TOTAL SHTS. 803
					CHECKED BY:		

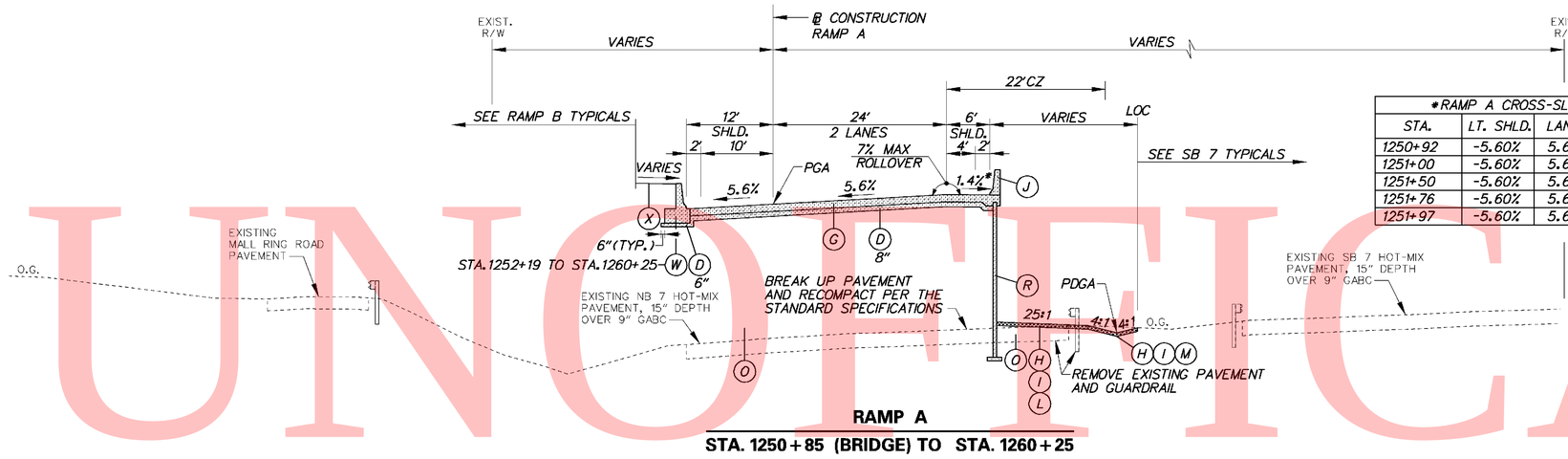

RAMP A

STA. 1250+85 (BRIDGE) TO STA. 1260+25

*RAMP A CROSS-SLOPES			
STA.	LT. SHLD.	LANES	RT. SHLD.
1250+92	-5.60%	5.60%	5.60%
1251+00	-5.60%	5.60%	5.07%
1251+50	-5.60%	5.60%	1.73%
1251+76	-5.60%	5.60%	0.00%
1251+97	-5.60%	5.60%	-1.40%

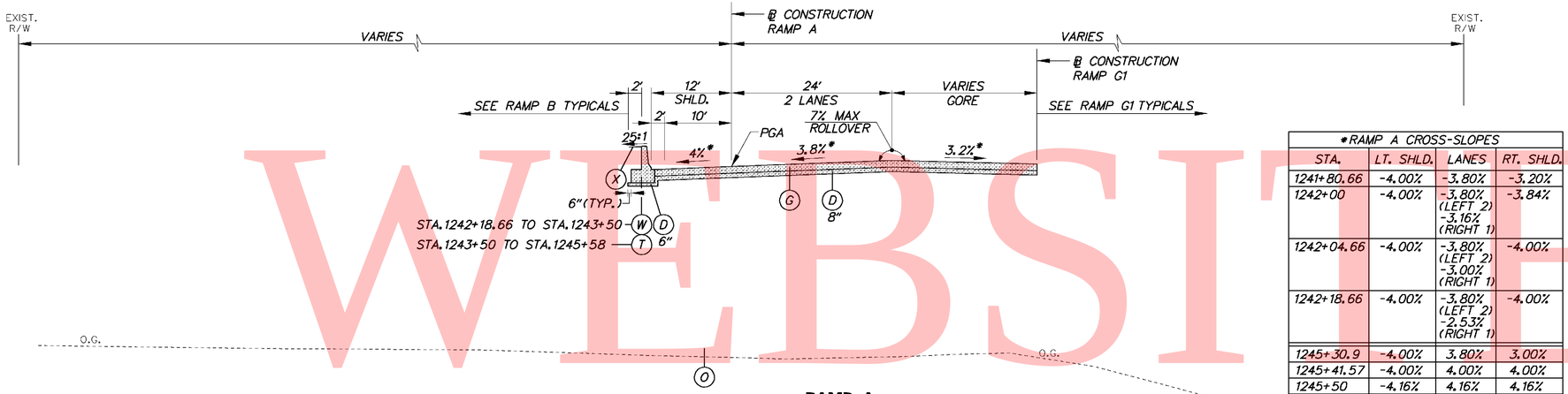

RAMP A

STA. 1242+18.66 TO STA. 1245+58 (BRIDGE)

*RAMP A CROSS-SLOPES			
STA.	LT. SHLD.	LANES	RT. SHLD.
1241+80.66	-4.00%	-3.80%	-3.20%
1242+00	-4.00%	-3.80% (LEFT 2) -3.16% (RIGHT 1)	-3.84%
1242+04.66	-4.00%	-3.80% (LEFT 2) -3.00% (RIGHT 1)	-4.00%
1242+18.66	-4.00%	-3.80% (LEFT 2) -2.53% (RIGHT 1)	-4.00%
1245+30.9	-4.00%	3.80%	3.00%
1245+41.57	-4.00%	4.00%	4.00%
1245+50	-4.16%	4.16%	4.16%

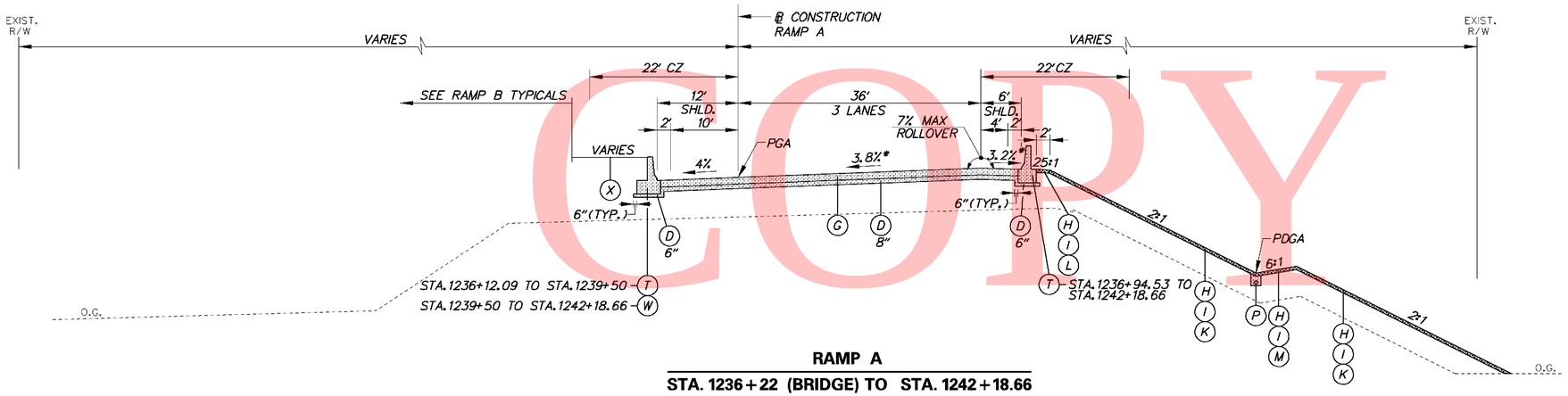

RAMP A

STA. 1236+22 (BRIDGE) TO STA. 1242+18.66

LEGEND

- (A) ITEM 401708 - SUPERPAVE, TYPE C HOT-MIX, 160 GYRATIONS, PG 70-22 (NON-CARBONATE STONE)
- (B) ITEM 401654 - SUPERPAVE, TYPE B HOT-MIX, 160 GYRATIONS, PG 70-22
- (C) ITEM 401663 - SUPERPAVE, BITUMINOUS CONCRETE BASE COURSE, 160 GYRATIONS, PG 64-22
- (D) ITEM 302007 - GRADED AGGREGATE BASE COURSE, TYPE B
- (E) ITEM 401711 - SUPERPAVE, TYPE C HOT-MIX, 160 GYRATIONS, PG 76-22 (NON-CARBONATE STONE)
- (F) ITEM 401660 - SUPERPAVE, TYPE B HOT-MIX, 160 GYRATIONS, PG 76-22
- (G) ITEM 501006 - PORTLAND CEMENT CONCRETE PAVEMENT, 12"
- (H) ITEM 732002 - TOPSOIL, 6" DEPTH
- (I) ITEM 734013 - PERMANENT GRASS SEEDING, DRY GROUND
- (J) ITEM 602017 - PCC MASONRY, PARAPET, CLASS A
- (K) ITEM 735533 - SOIL RETENTION BLANKET MULCH, TYPE 3
- (L) ITEM 735534 - SOIL RETENTION BLANKET MULCH, TYPE 4
- (M) ITEM 735535 - SOIL RETENTION BLANKET MULCH, TYPE 5, UNLESS OTHERWISE NOTED, SEE DRAINAGE PLANS FOR LIMITS AND TYPE
- (N) ITEM 209001 - BORROW, TYPE A
- (O) ITEM 209006 - BORROW, TYPE F OR APPROVED PROJECT EXCAVATION
- (P) ITEM 715001 - PERFORATED PIPE UNDERDRAINS, 6"
- (Q) ITEM 760504 - RUMBLE STRIPS, HOT-MIX
- (R) ITEM 602772 - MECHANICALLY STABILIZED EARTH WALLS
- (S) ITEM 602773 - PCC MASONRY FOR MECHANICALLY STABILIZED EARTH WALLS
- (T) ITEM ~~720512~~ 720529 - PCC SAFETY BARRIER PERMANENT, SINGLE FACE
- (U) ITEM 720654 - PCC SAFETY BARRIER PERMANENT, SINGLE FACE, MODIFIED TYPE 1
- (V) ITEM 720587 - PCC SAFETY BARRIER PERMANENT, DOUBLE FACE, MODIFIED
- (W) ITEM 720655 - PCC SAFETY BARRIER PERMANENT, SINGLE FACE, MODIFIED TYPE 2
- (X) ITEM 712005 - RIPRAP, R-4
- (Y) ITEM 401665 - SUPERPAVE, TYPE C HOT-MIX, 160 GYRATIONS, PG 64-22, PATCHING
- (Z) ITEM 401666 - SUPERPAVE, TYPE B HOT-MIX, 160 GYRATIONS, PG 64-22, PATCHING
- (AA) ITEM 401667 - SUPERPAVE, BITUMINOUS CONCRETE BASE COURSE, 160 GYRATIONS, PG 64-22, PATCHING
- (BB) ITEM 302008 - GRADED AGGREGATE BASE COURSE, TYPE B, PATCHING
- (CC) ITEM 755000 - HOT-MIX, HOT LAID, BITUMINOUS CONCRETE CURB
- (DD) ITEM 701010 - PORTLAND CEMENT CONCRETE CURB, TYPE 1
- (EE) ITEM 701011 - PORTLAND CEMENT CONCRETE CURB, TYPE 2
- (FF) ITEM 701020 - INTEGRAL PORTLAND CEMENT CONCRETE CURB AND GUTTER, TYPE 1
- (GG) ITEM 701023 - INTEGRAL PORTLAND CEMENT CONCRETE CURB AND GUTTER, TYPE 4
- (HH) ITEM 701026 - PORTLAND CEMENT CONCRETE MONOLITHIC MEDIAN
- (II) ITEM 701027 - PORTLAND CEMENT CONCRETE CURB, TYPE 1 MODIFIED
- (JJ) ITEM 720658 - PCC SAFETY BARRIER PERMANENT SINGLE FACE, MODIFIED, TYPE 5
- (KK) ITEM 720050 - GALVANIZED STEEL BEAM GUARDRAIL, TYPE 1
- (LL) ITEM 760507 - PROFILE MILLING, HOT-MIX
- (MM) ITEM 720656 - PCC SAFETY BARRIER PERMANENT, SINGLE FACE, MODIFIED, TYPE 3
- (NN) ITEM 720657 - PCC SAFETY BARRIER PERMANENT, SINGLE FACE, MODIFIED, TYPE 4
- (OO) ITEM 720651 - PCC SAFETY BARRIER PERMANENT, DOUBLE FACE, BIFURCATED, TYPE 1
- (PP) ITEM 720652 - PCC SAFETY BARRIER PERMANENT, DOUBLE FACE, BIFURCATED, TYPE 2
- (RR) ITEM 401668 - SUPERPAVE, TYPE C HOT-MIX, 160 GYRATIONS, PG 64-22, WEDGE
- (SS) ITEM 401669 - SUPERPAVE, TYPE B HOT-MIX, 160 GYRATIONS, PG 64-22, WEDGE

PAVEMENT LIFT NOTE:

THE MAXIMUM LIFTS FOR THE INDIVIDUAL PAVING MATERIAL ARE AS FOLLOWS:
SUPERPAVE, TYPE C HOT-MIX - 2"
SUPERPAVE, TYPE B HOT-MIX - 3"
SUPERPAVE, BIT. CONC. BASE COURSE - 6"
GRADED AGGREGATE BASE COURSE - 8"

NOTES:

1) THE PGA IS APPLIED TO THE TOP OF THE FINAL PAVEMENT SURFACE.

UNOFFICIAL WEBSITE COPY

DELAWARE DEPARTMENT OF TRANSPORTATION	ADDENDUMS / REVISIONS	NOT TO SCALE	SR1 / I-95 INTERCHANGE	CONTRACT 28-090-03	BRIDGE NO.	TYPICAL SECTIONS	SHEET NO. 23
	ADDENDUM NO. 3 CHANGED ITEM NO., 02/18/2011, RLS			COUNTY NEW CASTLE	DESIGNED BY:		TOTAL SHTS. 803
					CHECKED BY:		

2/15/2011 12:09:05 PM
M:\PROJECTS\2003\03059_DELTRNPK\SRIMALL\CADD\2809003\PLANS\TS17_SR1.DGN

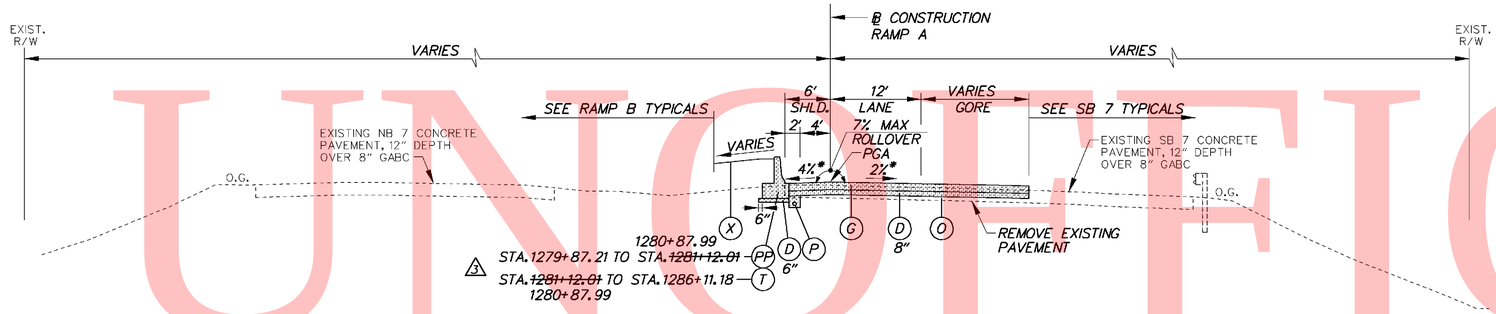

RAMP A

STA. 1279+87.21 TO STA. 1286+06.63

*RAMP A CROSS-SLOPES			
STA.	LT. SHLD.	LANES	RT. SHLD.
1281+49.03	-1.00%	-6.00%	-
1281+50	-1.02%	-5.98%	-
1282+00	-2.27%	-4.73%	-
1282+29.03	-3.00%	-4.00%	-
1282+50	-3.52%	-3.48%	-
1282+69.03	-4.00%	-3.00%	-
1283+00	-4.00%	-2.23%	-
1283+09.03	-4.00%	-2.00%	-

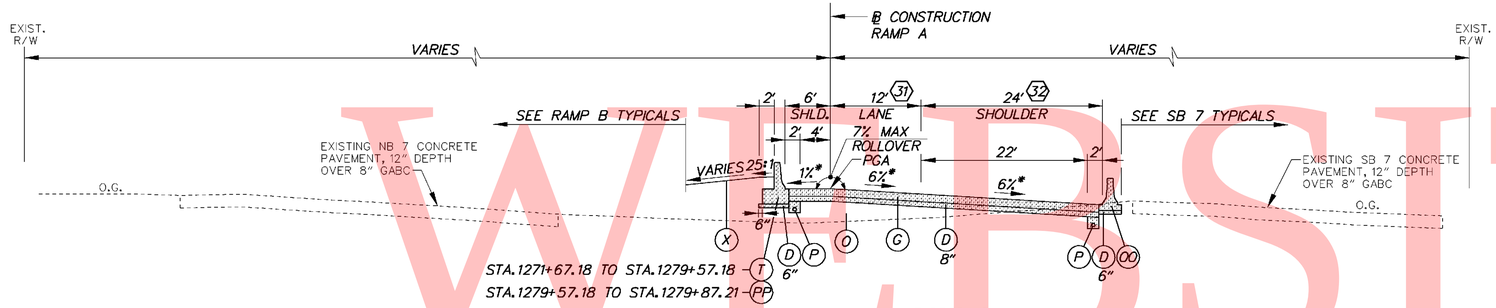

RAMP A

STA. 1271+67.18 TO STA. 1279+87.21

(31) STA. 1271+67.18 TO STA. 1278+87.18
WIDTH TAPERS 24' TO 12'

(32) STA. 1271+67.18 TO STA. 1278+87.18
SHOULDER TAPERS 12' TO 24'

*RAMP A CROSS-SLOPES			
STA.	LT. SHLD.	LANES	RT. SHLD.
1272+00	-4.00%	-2.00%	-4.00%
1272+27.15	-4.00%	-2.00%	-4.00%
1272+50	-4.00%	-2.57%	-4.00%
1272+67.15	-4.00%	-3.00%	-4.00%
1273+00	-3.18%	-3.82%	-4.00%
1273+07.15	-3.00%	-4.00%	-4.00%
1273+50	-1.93%	-5.07%	-5.07%
1273+87.15	-1.00%	-6.00%	-6.00%

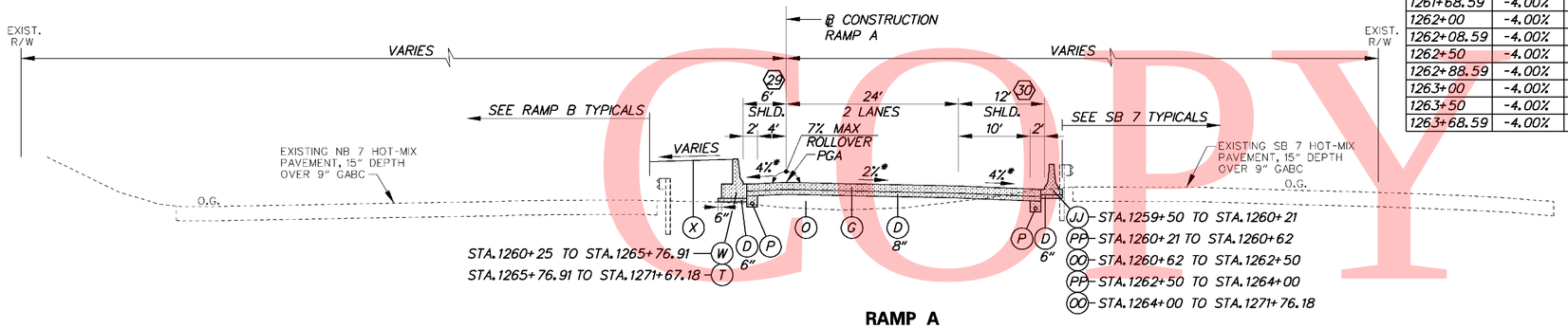

RAMP A

STA. 1260+25 TO STA. 1271+67.18

(29) STA. 1262+59.27 TO STA. 1264+39.27
SHOULDER TAPERS 12' TO 6'

(30) STA. 1261+39.22 TO STA. 126.3+19.26
SHOULDER TAPERS 6' TO 12'

*RAMP A CROSS-SLOPES			
STA.	LT. SHLD.	LANES	RT. SHLD.
1260+50	-5.60%	5.60%	-1.40%
1260+64.59	-5.60%	5.60%	-1.40%
1261+00	-4.71%	4.71%	-2.29%
1261+28.59	-4.00%	4.00%	-3.00%
1261+39.26	-4.00%	3.73%	-3.27%
1261+50	-4.00%	3.46%	-3.54%
1261+68.59	-4.00%	3.00%	-4.00%
1262+00	-4.00%	2.21%	-4.00%
1262+08.59	-4.00%	2.00%	-4.00%
1262+50	-4.00%	0.96%	-4.00%
1262+88.59	-4.00%	0.00%	-4.00%
1263+00	-4.00%	-0.29%	-4.00%
1263+50	-4.00%	-1.54%	-4.00%
1263+68.59	-4.00%	-2.00%	-4.00%

LEGEND

- (A) ITEM 401708 - SUPERPAVE, TYPE C HOT-MIX, 160 GYRATIONS, PG 70-22 (NON-CARBONATE STONE)
- (B) ITEM 401654 - SUPERPAVE, TYPE B HOT-MIX, 160 GYRATIONS, PG 70-22
- (C) ITEM 401663 - SUPERPAVE, BITUMINOUS CONCRETE BASE COURSE, 160 GYRATIONS, PG 64-22
- (D) ITEM 302007 - GRADED AGGREGATE BASE COURSE, TYPE B
- (E) ITEM 401711 - SUPERPAVE, TYPE C HOT-MIX, 160 GYRATIONS, PG 76-22 (NON-CARBONATE STONE)
- (F) ITEM 401660 - SUPERPAVE, TYPE B HOT-MIX, 160 GYRATIONS, PG 76-22
- (G) ITEM 501006 - PORTLAND CEMENT CONCRETE PAVEMENT, 12"
- (H) ITEM 732002 - TOPSOIL, 6" DEPTH
- (I) ITEM 734013 - PERMANENT GRASS SEEDING, DRY GROUND
- (J) ITEM 602017 - PCC MASONRY, PARAPET, CLASS A
- (K) ITEM 735533 - SOIL RETENTION BLANKET MULCH, TYPE 3
- (L) ITEM 735534 - SOIL RETENTION BLANKET MULCH, TYPE 4
- (M) ITEM 735535 - SOIL RETENTION BLANKET MULCH, TYPE 5, UNLESS OTHERWISE NOTED, SEE DRAINAGE PLANS FOR LIMITS AND TYPE
- (N) ITEM 209001 - BORROW, TYPE A
- (O) ITEM 209006 - BORROW, TYPE F OR APPROVED PROJECT EXCAVATION
- (P) ITEM 715001 - PERFORATED PIPE UNDERDRAINS, 6"
- (Q) ITEM 760504 - RUMBLE STRIPS, HOT-MIX
- (R) ITEM 602772 - MECHANICALLY STABILIZED EARTH WALLS
- (S) ITEM 602773 - PCC MASONRY FOR MECHANICALLY STABILIZED EARTH WALLS
- (T) ITEM 3 720529 ITEM ~~720512~~ - PCC SAFETY BARRIER PERMANENT, SINGLE FACE
- (U) ITEM 720654 - PCC SAFETY BARRIER PERMANENT, SINGLE FACE, MODIFIED TYPE 1
- (V) ITEM 720587 - PCC SAFETY BARRIER PERMANENT, DOUBLE FACE, MODIFIED
- (W) ITEM 720655 - PCC SAFETY BARRIER PERMANENT, SINGLE FACE, MODIFIED TYPE 2
- (X) ITEM 712005 - RIPRAP, R-4
- (Y) ITEM 401665 - SUPERPAVE, TYPE C HOT-MIX, 160 GYRATIONS, PG 64-22, PATCHING
- (Z) ITEM 401666 - SUPERPAVE, TYPE B HOT-MIX, 160 GYRATIONS, PG 64-22, PATCHING
- (AA) ITEM 401667 - SUPERPAVE, BITUMINOUS CONCRETE BASE COURSE, 160 GYRATIONS, PG 64-22, PATCHING
- (BB) ITEM 302008 - GRADED AGGREGATE BASE COURSE, TYPE B, PATCHING
- (CC) ITEM 755000 - HOT-MIX, HOT LAID, BITUMINOUS CONCRETE CURB
- (DD) ITEM 701010 - PORTLAND CEMENT CONCRETE CURB, TYPE 1
- (EE) ITEM 701011 - PORTLAND CEMENT CONCRETE CURB, TYPE 2
- (FF) ITEM 701020 - INTEGRAL PORTLAND CEMENT CONCRETE CURB AND GUTTER, TYPE 1
- (GG) ITEM 701023 - INTEGRAL PORTLAND CEMENT CONCRETE CURB AND GUTTER, TYPE 4
- (HH) ITEM 701026 - PORTLAND CEMENT CONCRETE MONOLITHIC MEDIAN
- (II) ITEM 701027 - PORTLAND CEMENT CONCRETE CURB, TYPE 1 MODIFIED
- (JJ) ITEM 720658 - PCC SAFETY BARRIER PERMANENT SINGLE FACE, MODIFIED, TYPE 5
- (KK) ITEM 720050 - GALVANIZED STEEL BEAM GUARDRAIL, TYPE 1
- (LL) ITEM 760507 - PROFILE MILLING, HOT-MIX
- (MM) ITEM 720656 - PCC SAFETY BARRIER PERMANENT, SINGLE FACE, MODIFIED, TYPE 3
- (NN) ITEM 720657 - PCC SAFETY BARRIER PERMANENT, SINGLE FACE, MODIFIED, TYPE 4
- (OO) ITEM 720651 - PCC SAFETY BARRIER PERMANENT, DOUBLE FACE, BIFURCATED, TYPE 1
- (PP) ITEM 720652 - PCC SAFETY BARRIER PERMANENT, DOUBLE FACE, BIFURCATED, TYPE 2
- (RR) ITEM 401668 - SUPERPAVE, TYPE C HOT-MIX, 160 GYRATIONS, PG 64-22, WEDGE
- (SS) ITEM 401669 - SUPERPAVE, TYPE B HOT-MIX, 160 GYRATIONS, PG 64-22, WEDGE

PAVEMENT LIFT NOTE:

THE MAXIMUM LIFTS FOR THE INDIVIDUAL PAVING MATERIAL ARE AS FOLLOWS:
SUPERPAVE, TYPE C HOT-MIX - 2"
SUPERPAVE, TYPE B HOT-MIX - 3"
SUPERPAVE, BIT. CONC. BASE COURSE - 6"
GRADED AGGREGATE BASE COURSE - 8"

NOTES:

1) THE PGA IS APPLIED TO THE TOP OF THE FINAL PAVEMENT SURFACE.

UNOFFICIAL WEBSITE COPY

2/25/2011 4:49:41 PM
M:\PROJECTS\2003\03059_DELTRNPK\SRIMALL\CADD\2809003\PLANS\TS18_SR1.DGN

DELAWARE DEPARTMENT OF TRANSPORTATION

ADDENDUMS / REVISIONS	
ADDENDUM NO. 3 CHANGED ITEM NO.,	
CHANGED BARRIER LIMITS, 02/18/2011, RLS	

NOT TO SCALE

SR1 / I-95 INTERCHANGE

CONTRACT	BRIDGE NO.	
28-090-03	DESIGNED BY:	
COUNTY	CHECKED BY:	
NEW CASTLE		

TYPICAL SECTIONS

SHEET NO.
24
TOTAL SHTS.
803

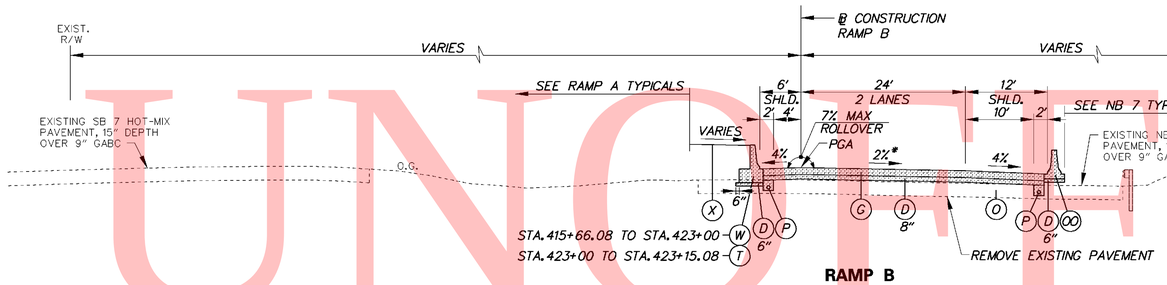

RAMP B

STA. 415+66.08 TO STA. 423+15.08

*RAMP B CROSS-SLOPES			
STA.	LT. SHLD.	LANES	RT. SHLD.
422+99.07	-4.00%	-2.00%	-4.00%
423+00	-4.00%	-2.02%	-4.00%
423+39.07	-4.00%	-3.00%	-4.00%

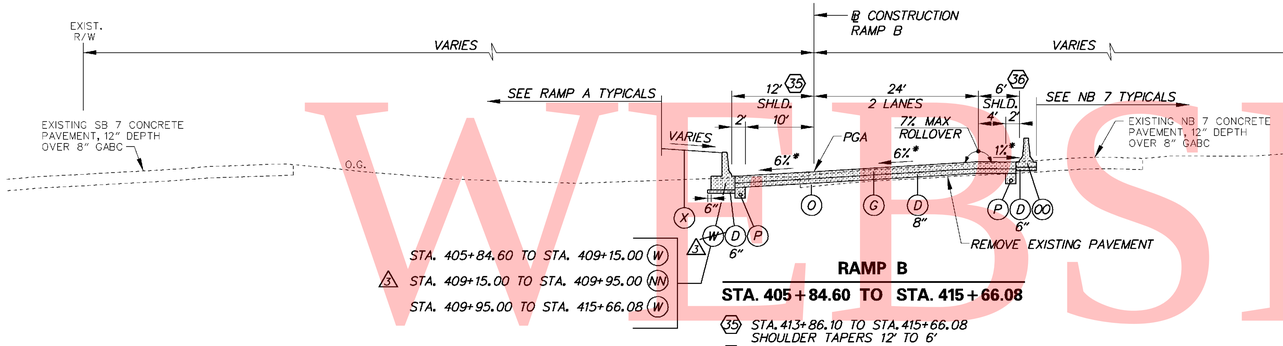

RAMP B

STA. 405+84.60 TO STA. 415+66.08

(35) STA. 413+86.10 TO STA. 415+66.08
SHOULDER TAPERS 12' TO 6'

(36) STA. 411+33.06 TO STA. 413+86.10
SHOULDER TAPERS 6' TO 12'

*RAMP B CROSS-SLOPES			
STA.	LT. SHLD.	LANES	RT. SHLD.
405+84.61	-5.40%	5.40%	6.00%
406+00	-5.78%	5.78%	5.67%
406+08.61	-6.00%	6.00%	5.09%
406+50	-6.00%	6.00%	2.33%
406+85.00	-6.00%	6.00%	0.00%
407+00	-6.00%	6.00%	-1.00%
411+85.01	-6.00%	6.00%	-1.00%
412+00	-5.63%	5.63%	-1.37%
412+50	-4.38%	4.38%	-2.62%
412+65.01	-4.00%	4.00%	-3.00%
413+00	-4.00%	3.13%	-3.87%
413+05.01	-4.00%	3.00%	-4.00%
413+45.01	-4.00%	2.00%	-4.00%
413+50	-4.00%	1.88%	-4.00%
414+00	-4.00%	0.63%	-4.00%
414+25.01	-4.00%	0.00%	-4.00%
414+50	-4.00%	-0.62%	-4.00%
415+00	-4.00%	-1.87%	-4.00%
415+05.01	-4.00%	-2.00%	-4.00%

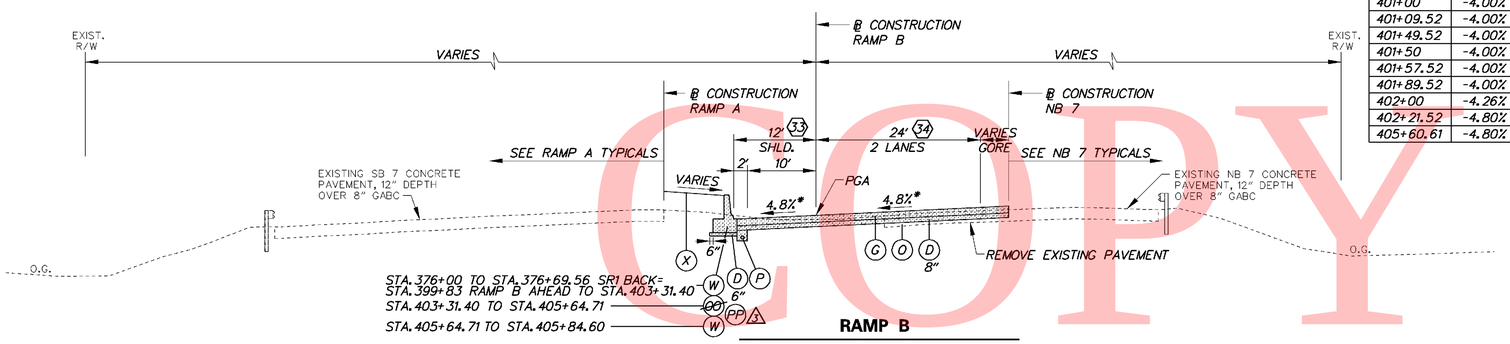

RAMP B

STA. 399+83 TO STA. 405+84.60

(33) STA. 399+83 TO STA. 400+13.44
SHOULDER TAPERS 10.17' TO 12'

(34) STA. 399+83 TO STA. 403+02.84
WIDTH TAPERS 12.55' TO 24'

*RAMP B CROSS-SLOPES			
STA.	LT. SHLD.	LANES	RT. SHLD.
399+83	-4.00%	-1.16%	-
400+00	-4.00%	-0.74%	-
400+29.52	-4.00%	0.00%	-
400+50	-4.00%	0.51%	-
401+00	-4.00%	1.76%	-
401+09.52	-4.00%	2.00%	-
401+49.52	-4.00%	3.00%	-
401+50	-4.00%	3.01%	-
401+57.52	-4.00%	3.20%	-
401+89.52	-4.00%	4.00%	-
402+00	-4.26%	4.26%	-
402+21.52	-4.80%	4.80%	-
405+60.61	-4.80%	4.80%	-

LEGEND

- (A) ITEM 401708 - SUPERPAVE, TYPE C HOT-MIX, 160 GYRATIONS, PG 70-22 (NON-CARBONATE STONE)
- (B) ITEM 401654 - SUPERPAVE, TYPE B HOT-MIX, 160 GYRATIONS, PG 70-22
- (C) ITEM 401663 - SUPERPAVE, BITUMINOUS CONCRETE BASE COURSE, 160 GYRATIONS, PG 64-22
- (D) ITEM 302007 - GRADED AGGREGATE BASE COURSE, TYPE B
- (E) ITEM 401711 - SUPERPAVE, TYPE C HOT-MIX, 160 GYRATIONS, PG 76-22 (NON-CARBONATE STONE)
- (F) ITEM 401660 - SUPERPAVE, TYPE B HOT-MIX, 160 GYRATIONS, PG 76-22
- (G) ITEM 501006 - PORTLAND CEMENT CONCRETE PAVEMENT, 12"
- (H) ITEM 732002 - TOPSOIL, 6" DEPTH
- (I) ITEM 734013 - PERMANENT GRASS SEEDING, DRY GROUND
- (J) ITEM 602017 - PCC MASONRY, PARAPET, CLASS A
- (K) ITEM 735533 - SOIL RETENTION BLANKET MULCH, TYPE 3
- (L) ITEM 735534 - SOIL RETENTION BLANKET MULCH, TYPE 4
- (M) ITEM 735535 - SOIL RETENTION BLANKET MULCH, TYPE 5, UNLESS OTHERWISE NOTED, SEE DRAINAGE PLANS FOR LIMITS AND TYPE
- (N) ITEM 209001 - BORROW, TYPE A
- (O) ITEM 209006 - BORROW, TYPE F OR APPROVED PROJECT EXCAVATION
- (P) ITEM 715001 - PERFORATED PIPE UNDERDRAINS, 6"
- (Q) ITEM 760504 - RUMBLE STRIPS, HOT-MIX
- (R) ITEM 602772 - MECHANICALLY STABILIZED EARTH WALLS
- (S) ITEM 602773 - PCC MASONRY FOR MECHANICALLY STABILIZED EARTH WALLS
  △3 720529
- (T) ITEM ~~720512~~ - PCC SAFETY BARRIER PERMANENT, SINGLE FACE
- (U) ITEM 720654 - PCC SAFETY BARRIER PERMANENT, SINGLE FACE, MODIFIED TYPE 1
- (V) ITEM 720587 - PCC SAFETY BARRIER PERMANENT, DOUBLE FACE, MODIFIED
- (W) ITEM 720655 - PCC SAFETY BARRIER PERMANENT, SINGLE FACE, MODIFIED TYPE 2
- (X) ITEM 712005 - RIPRAP, R-4
- (Y) ITEM 401665 - SUPERPAVE, TYPE C HOT-MIX, 160 GYRATIONS, PG 64-22, PATCHING
- (Z) ITEM 401666 - SUPERPAVE, TYPE B HOT-MIX, 160 GYRATIONS, PG 64-22, PATCHING
- (AA) ITEM 401667 - SUPERPAVE, BITUMINOUS CONCRETE BASE COURSE, 160 GYRATIONS, PG 64-22, PATCHING
- (BB) ITEM 302008 - GRADED AGGREGATE BASE COURSE, TYPE B, PATCHING
- (CC) ITEM 755000 - HOT-MIX, HOT LAID, BITUMINOUS CONCRETE CURB
- (DD) ITEM 701010 - PORTLAND CEMENT CONCRETE CURB, TYPE 1
- (EE) ITEM 701011 - PORTLAND CEMENT CONCRETE CURB, TYPE 2
- (FF) ITEM 701020 - INTEGRAL PORTLAND CEMENT CONCRETE CURB AND GUTTER, TYPE 1
- (GG) ITEM 701023 - INTEGRAL PORTLAND CEMENT CONCRETE CURB AND GUTTER, TYPE 4
- (HH) ITEM 701026 - PORTLAND CEMENT CONCRETE MONOLITHIC MEDIAN
- (II) ITEM 701027 - PORTLAND CEMENT CONCRETE CURB, TYPE 1 MODIFIED
- (JJ) ITEM 720658 - PCC SAFETY BARRIER PERMANENT SINGLE FACE, MODIFIED, TYPE 5
- (KK) ITEM 720050 - GALVANIZED STEEL BEAM GUARDRAIL, TYPE 1
- (LL) ITEM 760507 - PROFILE MILLING, HOT-MIX
- (MM) ITEM 720656 - PCC SAFETY BARRIER PERMANENT, SINGLE FACE, MODIFIED, TYPE 3
- (NN) ITEM 720657 - PCC SAFETY BARRIER PERMANENT, SINGLE FACE, MODIFIED, TYPE 4
- (OO) ITEM 720651 - PCC SAFETY BARRIER PERMANENT, DOUBLE FACE, BIFURCATED, TYPE 1
- (PP) ITEM 720652 - PCC SAFETY BARRIER PERMANENT, DOUBLE FACE, BIFURCATED, TYPE 2
- (RR) ITEM 401668 - SUPERPAVE, TYPE C HOT-MIX, 160 GYRATIONS, PG 64-22, WEDGE
- (SS) ITEM 401669 - SUPERPAVE, TYPE B HOT-MIX, 160 GYRATIONS, PG 64-22, WEDGE

PAVEMENT LIFT NOTE:

THE MAXIMUM LIFTS FOR THE INDIVIDUAL PAVING MATERIAL ARE AS FOLLOWS:
SUPERPAVE, TYPE C HOT-MIX - 2"
SUPERPAVE, TYPE B HOT-MIX - 3"
SUPERPAVE, BIT. CONC. BASE COURSE - 6"
GRADED AGGREGATE BASE COURSE - 8"

NOTES:

1) THE PGA IS APPLIED TO THE TOP OF THE FINAL PAVEMENT SURFACE.

UNOFFICIAL WEBSITE COPY

2/25/2011 5:20:56 PM
M:\PROJECTS\2003\03059_DELTNPK\SRTMALL\CADD\2809003\PLANS\TS19_SR1.DGN

DELAWARE DEPARTMENT OF TRANSPORTATION

ADDENDUMS / REVISIONS
ADDENDUM NO. △3 CHANGED ITEM NO.,
CHANGED BARRIER LIMITS, 02/18/2011, RLS

NOT TO SCALE

SR1 / I-95 INTERCHANGE

CONTRACT	BRIDGE NO.	
28-090-03	DESIGNED BY:	
COUNTY	CHECKED BY:	
NEW CASTLE		

TYPICAL SECTIONS

SHEET NO.
25
TOTAL SHTS.
803

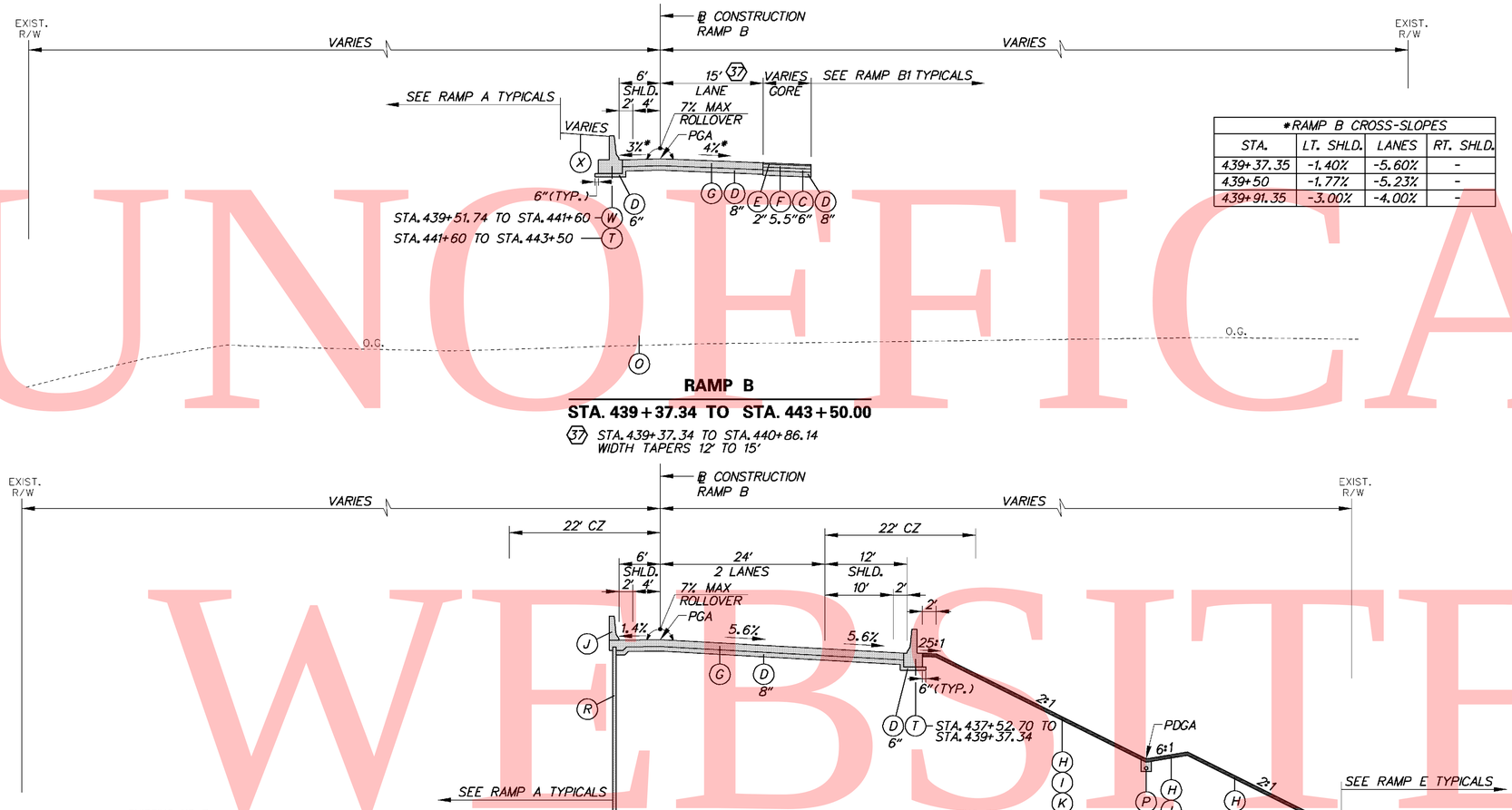

*RAMP B CROSS-SLOPES			
STA.	LT. SHLD.	LANES	RT. SHLD.
439+37.35	-1.40%	-5.60%	-
439+50	-1.77%	-5.23%	-
439+91.35	-3.00%	-4.00%	-

RAMP B

STA. 439+37.34 TO STA. 443+50.00

(37) STA. 439+37.34 TO STA. 440+86.14
WIDTH TAPERS 12' TO 15'

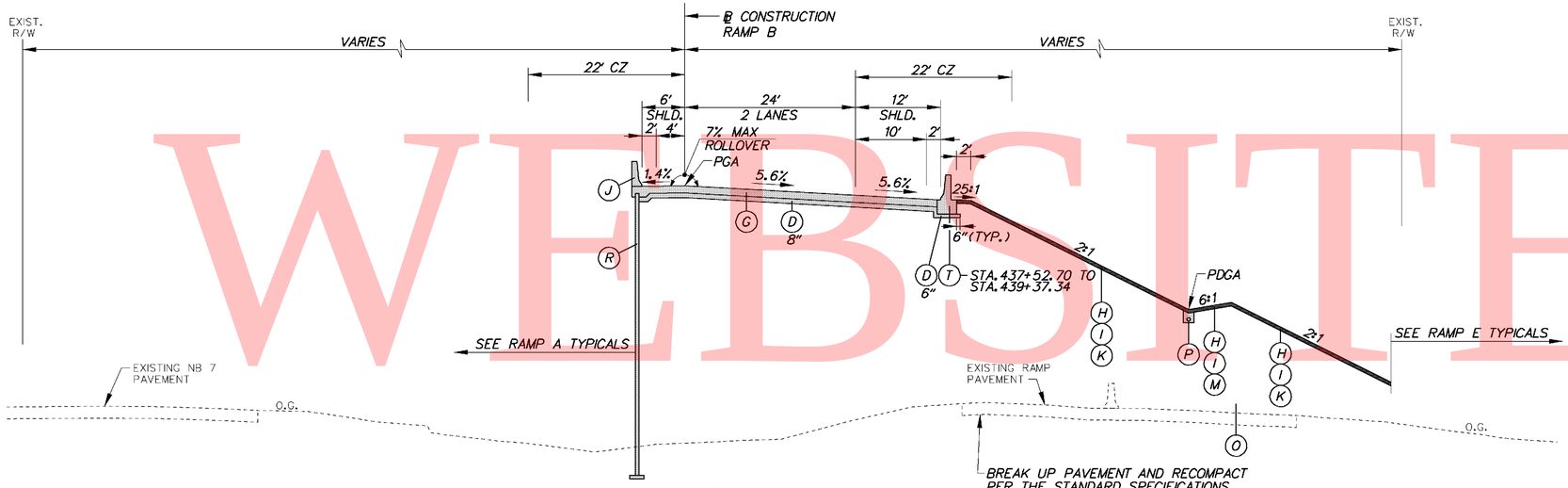

RAMP B

STA. 437+15.86 (BRIDGE) TO STA. 439+37.34

*RAMP B CROSS-SLOPES			
STA.	LT. SHLD.	LANES	RT. SHLD.
422+99.07	-4.00%	-2.00%	-4.00%
423+00	-4.00%	-2.02%	-4.00%
423+39.07	-4.00%	-3.00%	-4.00%
423+50	-3.73%	-3.27%	-4.00%
423+68.57	-3.26%	-3.74%	-4.00%
423+79.07	-3.00%	-4.00%	-4.00%
424+00	-2.48%	-4.52%	-4.52%
424+43.07	-1.40%	-5.60%	-5.60%

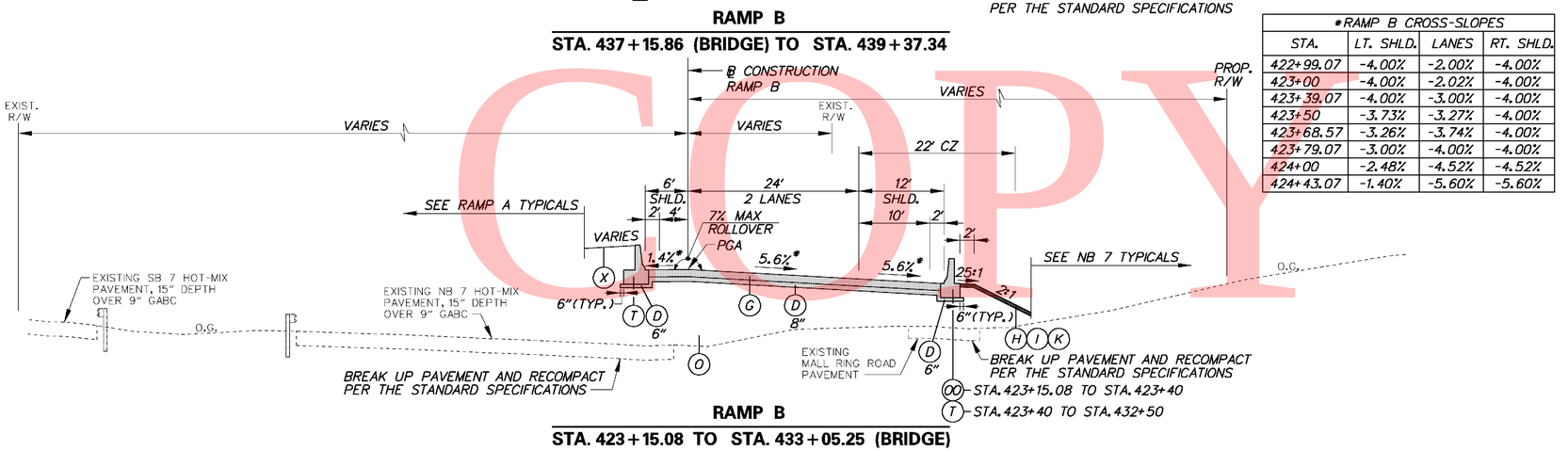

RAMP B

STA. 423+15.08 TO STA. 433+05.25 (BRIDGE)

LEGEND

- (A) ITEM 401708 - SUPERPAVE, TYPE C HOT-MIX, 160 GYRATIONS, PG 70-22 (NON-CARBONATE STONE)
- (B) ITEM 401654 - SUPERPAVE, TYPE B HOT-MIX, 160 GYRATIONS, PG 70-22
- (C) ITEM 401663 - SUPERPAVE, BITUMINOUS CONCRETE BASE COURSE, 160 GYRATIONS, PG 64-22
- (D) ITEM 302007 - GRADED AGGREGATE BASE COURSE, TYPE B
- (E) ITEM 401711 - SUPERPAVE, TYPE C HOT-MIX, 160 GYRATIONS, PG 76-22 (NON-CARBONATE STONE)
- (F) ITEM 401660 - SUPERPAVE, TYPE B HOT-MIX, 160 GYRATIONS, PG 76-22
- (G) ITEM 501006 - PORTLAND CEMENT CONCRETE PAVEMENT, 12"
- (H) ITEM 732002 - TOPSOIL, 6" DEPTH
- (I) ITEM 734013 - PERMANENT GRASS SEEDING, DRY GROUND
- (J) ITEM 602017 - PCC MASONRY, PARAPET, CLASS A
- (K) ITEM 735533 - SOIL RETENTION BLANKET MULCH, TYPE 3
- (L) ITEM 735534 - SOIL RETENTION BLANKET MULCH, TYPE 4
- (M) ITEM 735535 - SOIL RETENTION BLANKET MULCH, TYPE 5, UNLESS OTHERWISE NOTED, SEE DRAINAGE PLANS FOR LIMITS AND TYPE
- (N) ITEM 209001 - BORROW, TYPE A
- (O) ITEM 209006 - BORROW, TYPE F OR APPROVED PROJECT EXCAVATION
- (P) ITEM 715001 - PERFORATED PIPE UNDERDRAINS, 6"
- (Q) ITEM 760504 - RUMBLE STRIPS, HOT-MIX
- (R) ITEM 602772 - MECHANICALLY STABILIZED EARTH WALLS
- (S) ITEM 602773 - PCC MASONRY FOR MECHANICALLY STABILIZED EARTH WALLS
- (T) ITEM ~~720512~~ (3) 720529 - PCC SAFETY BARRIER PERMANENT, SINGLE FACE
- (U) ITEM 720654 - PCC SAFETY BARRIER PERMANENT, SINGLE FACE, MODIFIED TYPE 1
- (V) ITEM 720587 - PCC SAFETY BARRIER PERMANENT, DOUBLE FACE, MODIFIED
- (W) ITEM 720655 - PCC SAFETY BARRIER PERMANENT, SINGLE FACE, MODIFIED TYPE 2
- (X) ITEM 712005 - RIPRAP, R-4
- (Y) ITEM 401665 - SUPERPAVE, TYPE C HOT-MIX, 160 GYRATIONS, PG 64-22, PATCHING
- (Z) ITEM 401666 - SUPERPAVE, TYPE B HOT-MIX, 160 GYRATIONS, PG 64-22, PATCHING
- (AA) ITEM 401667 - SUPERPAVE, BITUMINOUS CONCRETE BASE COURSE, 160 GYRATIONS, PG 64-22, PATCHING
- (BB) ITEM 302008 - GRADED AGGREGATE BASE COURSE, TYPE B, PATCHING
- (CC) ITEM 755000 - HOT-MIX, HOT LAID, BITUMINOUS CONCRETE CURB
- (DD) ITEM 701010 - PORTLAND CEMENT CONCRETE CURB, TYPE 1
- (EE) ITEM 701011 - PORTLAND CEMENT CONCRETE CURB, TYPE 2
- (FF) ITEM 701020 - INTEGRAL PORTLAND CEMENT CONCRETE CURB AND GUTTER, TYPE 1
- (GG) ITEM 701023 - INTEGRAL PORTLAND CEMENT CONCRETE CURB AND GUTTER, TYPE 4
- (HH) ITEM 701026 - PORTLAND CEMENT CONCRETE MONOLITHIC MEDIAN
- (II) ITEM 701027 - PORTLAND CEMENT CONCRETE CURB, TYPE 1 MODIFIED
- (JJ) ITEM 720658 - PCC SAFETY BARRIER PERMANENT SINGLE FACE, MODIFIED, TYPE 5
- (KK) ITEM 720050 - GALVANIZED STEEL BEAM GUARDRAIL, TYPE 1
- (LL) ITEM 760507 - PROFILE MILLING, HOT-MIX
- (MM) ITEM 720656 - PCC SAFETY BARRIER PERMANENT, SINGLE FACE, MODIFIED, TYPE 3
- (NN) ITEM 720657 - PCC SAFETY BARRIER PERMANENT, SINGLE FACE, MODIFIED, TYPE 4
- (OO) ITEM 720651 - PCC SAFETY BARRIER PERMANENT, DOUBLE FACE, BIFURCATED, TYPE 1
- (PP) ITEM 720652 - PCC SAFETY BARRIER PERMANENT, DOUBLE FACE, BIFURCATED, TYPE 2
- (RR) ITEM 401668 - SUPERPAVE, TYPE C HOT-MIX, 160 GYRATIONS, PG 64-22, WEDGE
- (SS) ITEM 401669 - SUPERPAVE, TYPE B HOT-MIX, 160 GYRATIONS, PG 64-22, WEDGE

PAVEMENT LIFT NOTE:

THE MAXIMUM LIFTS FOR THE INDIVIDUAL PAVING MATERIAL ARE AS FOLLOWS:
SUPERPAVE, TYPE C HOT-MIX - 2"
SUPERPAVE, TYPE B HOT-MIX - 3"
SUPERPAVE, BIT. CONC. BASE COURSE - 6"
GRADED AGGREGATE BASE COURSE - 8"

NOTES:

1) THE PGA IS APPLIED TO THE TOP OF THE FINAL PAVEMENT SURFACE.

UNOFFICIAL WEBSITE COPY

2/15/2011 12:12:54 PM
M:\PROJECTS\2003\03059_DELTRNPK\SRTMALL\CADD\2809003\PLANS\TS20_SR1.DGN

DELAWARE DEPARTMENT OF TRANSPORTATION	ADDENDUMS / REVISIONS	NOT TO SCALE	SR1 / I-95 INTERCHANGE	CONTRACT 28-090-03	BRIDGE NO.	TYPICAL SECTIONS	SHEET NO. 26
	ADDENDUM NO. (3) CHANGED ITEM NO., 02/18/2011, RLS			COUNTY NEW CASTLE	DESIGNED BY:		TOTAL SHTS. 803
					CHECKED BY:		

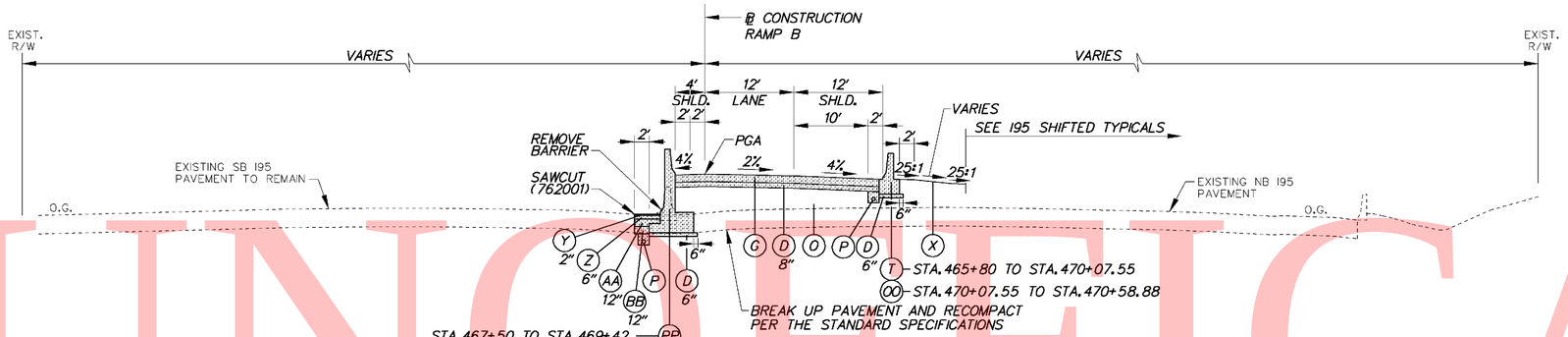

RAMP B

STA. 465+85.00 TO STA. 470+58.88

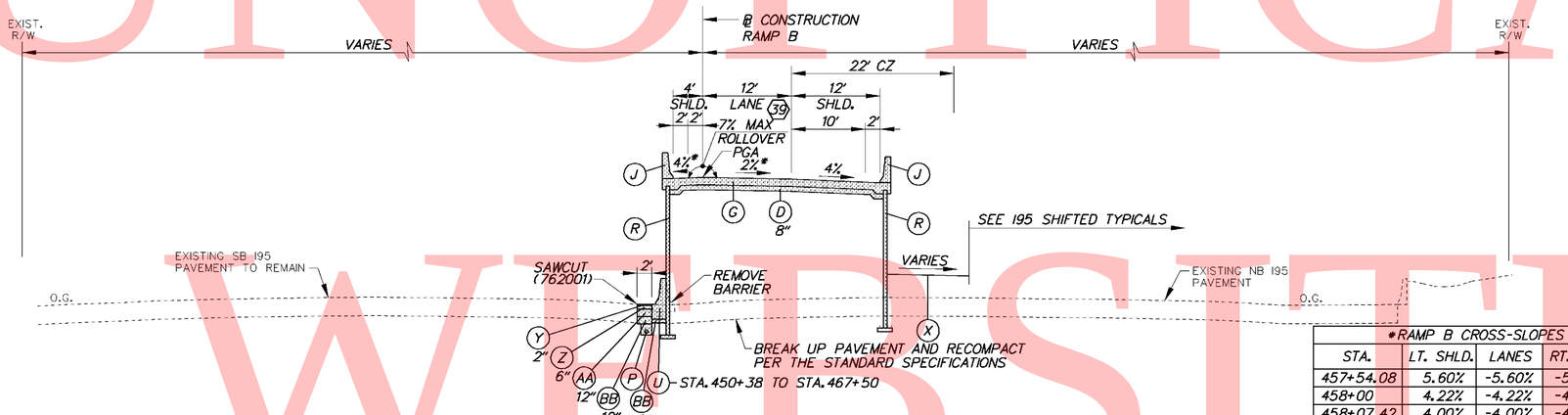

RAMP B

STA. 458+38.80 (BRIDGE) TO STA. 465+85.00

(39) STA. 459+16.30 TO STA. 462+16.30
WIDTH TAPERS 15' TO 12'

*RAMP B CROSS-SLOPES			
STA.	LT. SHLD.	LANES	RT. SHLD.
457+54.08	5.60%	-5.60%	-5.60%
458+00	4.22%	-4.22%	-4.22%
458+07.42	4.00%	-4.00%	-4.00%
458+16.30	3.73%	-3.73%	-4.00%
458+40.75	3.00%	-3.00%	-4.00%
458+50	2.50%	-2.72%	-4.00%
458+74.08	0.09%	-2.00%	-4.00%
458+75.00	0.00%	-2.00%	-4.00%
459+00	-2.50%	-2.00%	-4.00%
459+15.00	-4.00%	-2.00%	-4.00%

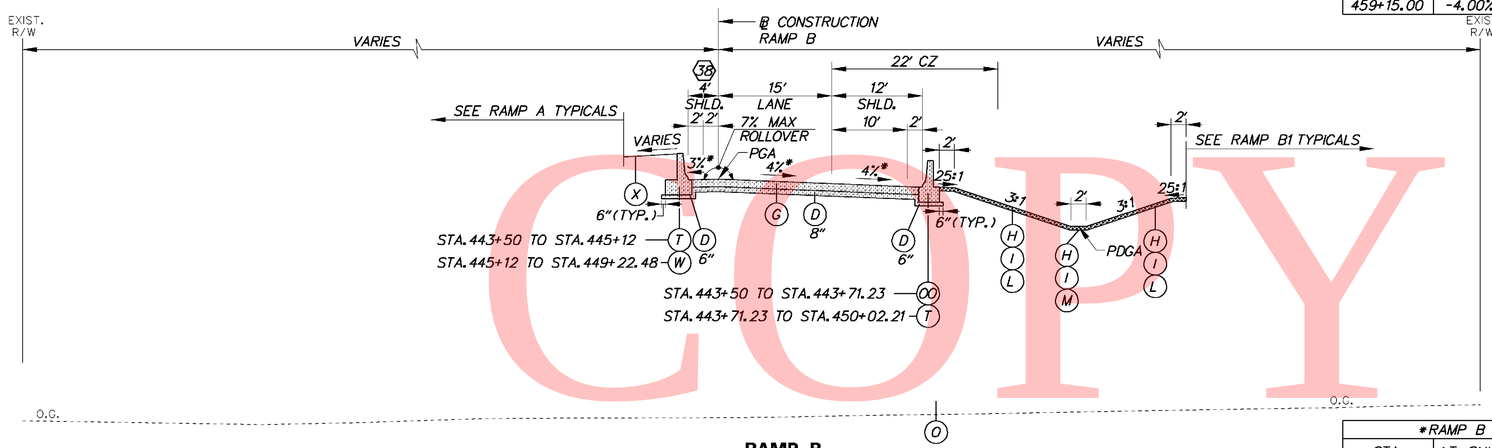

RAMP B

STA. 443+50.00 TO STA. 450+42.60 (BRIDGE)

(38) STA. 443+50.00 TO STA. 444+70.00
SHOULDER TAPERS 6' TO 4'

*RAMP B CROSS-SLOPES			
STA.	LT. SHLD.	LANES	RT. SHLD.
447+97.34	-3.00%	-4.00%	-4.00%
448+00	-2.92%	-4.08%	-4.08%
448+24.34	-2.20%	-4.80%	-4.80%
448+50	-1.44%	-5.56%	-5.56%
448+51.34	-1.40%	-5.60%	-5.60%

LEGEND

- (A) ITEM 401708 - SUPERPAVE, TYPE C HOT-MIX, 160 GYRATIONS, PG 70-22 (NON-CARBONATE STONE)
- (B) ITEM 401654 - SUPERPAVE, TYPE B HOT-MIX, 160 GYRATIONS, PG 70-22
- (C) ITEM 401663 - SUPERPAVE, BITUMINOUS CONCRETE BASE COURSE, 160 GYRATIONS, PG 64-22
- (D) ITEM 302007 - GRADED AGGREGATE BASE COURSE, TYPE B
- (E) ITEM 401711 - SUPERPAVE, TYPE C HOT-MIX, 160 GYRATIONS, PG 76-22 (NON-CARBONATE STONE)
- (F) ITEM 401660 - SUPERPAVE, TYPE B HOT-MIX, 160 GYRATIONS, PG 76-22
- (G) ITEM 501006 - PORTLAND CEMENT CONCRETE PAVEMENT, 12"
- (H) ITEM 732002 - TOPSOIL, 6" DEPTH
- (I) ITEM 734013 - PERMANENT GRASS SEEDING, DRY GROUND
- (J) ITEM 602017 - PCC MASONRY, PARAPET, CLASS A
- (K) ITEM 735533 - SOIL RETENTION BLANKET MULCH, TYPE 3
- (L) ITEM 735534 - SOIL RETENTION BLANKET MULCH, TYPE 4
- (M) ITEM 735535 - SOIL RETENTION BLANKET MULCH, TYPE 5, UNLESS OTHERWISE NOTED, SEE DRAINAGE PLANS FOR LIMITS AND TYPE
- (N) ITEM 209001 - BORROW, TYPE A
- (O) ITEM 209006 - BORROW, TYPE F OR APPROVED PROJECT EXCAVATION
- (P) ITEM 715001 - PERFORATED PIPE UNDERDRAINS, 6"
- (Q) ITEM 760504 - RUMBLE STRIPS, HOT-MIX
- (R) ITEM 602772 - MECHANICALLY STABILIZED EARTH WALLS
- (S) ITEM 602773 - PCC MASONRY FOR MECHANICALLY STABILIZED EARTH WALLS
- (T) ITEM ~~720512~~ 3 720529 - PCC SAFETY BARRIER PERMANENT, SINGLE FACE
- (U) ITEM 720654 - PCC SAFETY BARRIER PERMANENT, SINGLE FACE, MODIFIED TYPE 1
- (V) ITEM 720587 - PCC SAFETY BARRIER PERMANENT, DOUBLE FACE, MODIFIED
- (W) ITEM 720655 - PCC SAFETY BARRIER PERMANENT, SINGLE FACE, MODIFIED TYPE 2
- (X) ITEM 712005 - RIPRAP, R-4
- (Y) ITEM 401665 - SUPERPAVE, TYPE C HOT-MIX, 160 GYRATIONS, PG 64-22, PATCHING
- (Z) ITEM 401666 - SUPERPAVE, TYPE B HOT-MIX, 160 GYRATIONS, PG 64-22, PATCHING
- (AA) ITEM 401667 - SUPERPAVE, BITUMINOUS CONCRETE BASE COURSE, 160 GYRATIONS, PG 64-22, PATCHING
- (BB) ITEM 302008 - GRADED AGGREGATE BASE COURSE, TYPE B, PATCHING
- (CC) ITEM 755000 - HOT-MIX, HOT LAID, BITUMINOUS CONCRETE CURB
- (DD) ITEM 701010 - PORTLAND CEMENT CONCRETE CURB, TYPE 1
- (EE) ITEM 701011 - PORTLAND CEMENT CONCRETE CURB, TYPE 2
- (FF) ITEM 701020 - INTEGRAL PORTLAND CEMENT CONCRETE CURB AND GUTTER, TYPE 1
- (GG) ITEM 701023 - INTEGRAL PORTLAND CEMENT CONCRETE CURB AND GUTTER, TYPE 4
- (HH) ITEM 701026 - PORTLAND CEMENT CONCRETE MONOLITHIC MEDIAN
- (II) ITEM 701027 - PORTLAND CEMENT CONCRETE CURB, TYPE 1 MODIFIED
- (JJ) ITEM 720658 - PCC SAFETY BARRIER PERMANENT SINGLE FACE, MODIFIED, TYPE 5
- (KK) ITEM 720050 - GALVANIZED STEEL BEAM GUARDRAIL, TYPE 1
- (LL) ITEM 760507 - PROFILE MILLING, HOT-MIX
- (MM) ITEM 720656 - PCC SAFETY BARRIER PERMANENT, SINGLE FACE, MODIFIED, TYPE 3
- (NN) ITEM 720657 - PCC SAFETY BARRIER PERMANENT, SINGLE FACE, MODIFIED, TYPE 4
- (OO) ITEM 720651 - PCC SAFETY BARRIER PERMANENT, DOUBLE FACE, BIFURCATED, TYPE 1
- (PP) ITEM 720652 - PCC SAFETY BARRIER PERMANENT, DOUBLE FACE, BIFURCATED, TYPE 2
- (RR) ITEM 401668 - SUPERPAVE, TYPE C HOT-MIX, 160 GYRATIONS, PG 64-22, WEDGE
- (SS) ITEM 401669 - SUPERPAVE, TYPE B HOT-MIX, 160 GYRATIONS, PG 64-22, WEDGE

PAVEMENT LIFT NOTE:

THE MAXIMUM LIFTS FOR THE INDIVIDUAL PAVING MATERIAL ARE AS FOLLOWS:
SUPERPAVE, TYPE C HOT-MIX - 2"
SUPERPAVE, TYPE B HOT-MIX - 3"
SUPERPAVE, BIT. CONC. BASE COURSE - 6"
GRADED AGGREGATE BASE COURSE - 8"

NOTES:

1) THE PGA IS APPLIED TO THE TOP OF THE FINAL PAVEMENT SURFACE.

UNOFFICIAL WEBSITE COPY

DELAWARE DEPARTMENT OF TRANSPORTATION	ADDENDUMS / REVISIONS	NOT TO SCALE	SR1 / I-95 INTERCHANGE	CONTRACT 28-090-03	BRIDGE NO.	TYPICAL SECTIONS	SHEET NO. 27
	ADDENDUM NO. 3 CHANGED ITEM NO., 02/18/2011, RLS			COUNTY NEW CASTLE	DESIGNED BY:		TOTAL SHTS. 803
					CHECKED BY:		

2/15/2011 12:14:06 PM
M:\PROJECTS\2003\03059_DELTRNPK\SRIMALL\CADD\2809003\PLANS\TS21_SR1.DGN

UNOFFICIAL WEBSITE COPY

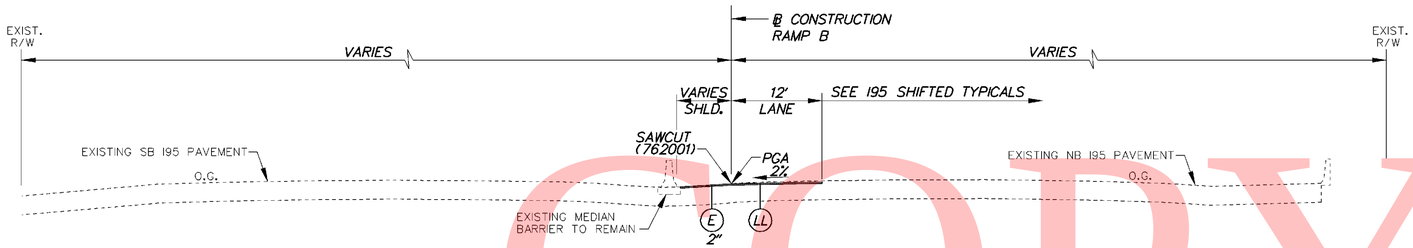

RAMP B

STA. 470+58.88 TO STA. 476+21.70

LEGEND

- (A) ITEM 401708 - SUPERPAVE, TYPE C HOT-MIX, 160 GYRATIONS, PG 70-22 (NON-CARBONATE STONE)
- (B) ITEM 401654 - SUPERPAVE, TYPE B HOT-MIX, 160 GYRATIONS, PG 70-22
- (C) ITEM 401663 - SUPERPAVE, BITUMINOUS CONCRETE BASE COURSE, 160 GYRATIONS, PG 64-22
- (D) ITEM 302007 - GRADED AGGREGATE BASE COURSE, TYPE B
- (E) ITEM 401711 - SUPERPAVE, TYPE C HOT-MIX, 160 GYRATIONS, PG 76-22 (NON-CARBONATE STONE)
- (F) ITEM 401660 - SUPERPAVE, TYPE B HOT-MIX, 160 GYRATIONS, PG 76-22
- (G) ITEM 501006 - PORTLAND CEMENT CONCRETE PAVEMENT, 12"
- (H) ITEM 732002 - TOPSOIL, 6" DEPTH
- (I) ITEM 734013 - PERMANENT GRASS SEEDING, DRY GROUND
- (J) ITEM 602017 - PCC MASONRY, PARAPET, CLASS A
- (K) ITEM 735533 - SOIL RETENTION BLANKET MULCH, TYPE 3
- (L) ITEM 735534 - SOIL RETENTION BLANKET MULCH, TYPE 4
- (M) ITEM 735535 - SOIL RETENTION BLANKET MULCH, TYPE 5, UNLESS OTHERWISE NOTED, SEE DRAINAGE PLANS FOR LIMITS AND TYPE
- (N) ITEM 209001 - BORROW, TYPE A
- (O) ITEM 209006 - BORROW, TYPE F OR APPROVED PROJECT EXCAVATION
- (P) ITEM 715001 - PERFORATED PIPE UNDERDRAINS, 6"
- (Q) ITEM 760504 - RUMBLE STRIPS, HOT-MIX
- (R) ITEM 602772 - MECHANICALLY STABILIZED EARTH WALLS
- (S) ITEM 602773 - PCC MASONRY FOR MECHANICALLY STABILIZED EARTH WALLS
- (T) ITEM ~~720512~~ 3 720529 - PCC SAFETY BARRIER PERMANENT, SINGLE FACE
- (U) ITEM 720654 - PCC SAFETY BARRIER PERMANENT, SINGLE FACE, MODIFIED TYPE 1
- (V) ITEM 720587 - PCC SAFETY BARRIER PERMANENT, DOUBLE FACE, MODIFIED
- (W) ITEM 720655 - PCC SAFETY BARRIER PERMANENT, SINGLE FACE, MODIFIED TYPE 2
- (X) ITEM 712005 - RIPRAP, R-4
- (Y) ITEM 401665 - SUPERPAVE, TYPE C HOT-MIX, 160 GYRATIONS, PG 64-22, PATCHING
- (Z) ITEM 401666 - SUPERPAVE, TYPE B HOT-MIX, 160 GYRATIONS, PG 64-22, PATCHING
- (AA) ITEM 401667 - SUPERPAVE, BITUMINOUS CONCRETE BASE COURSE, 160 GYRATIONS, PG 64-22, PATCHING
- (BB) ITEM 302008 - GRADED AGGREGATE BASE COURSE, TYPE B, PATCHING
- (CC) ITEM 755000 - HOT-MIX, HOT LAID, BITUMINOUS CONCRETE CURB
- (DD) ITEM 701010 - PORTLAND CEMENT CONCRETE CURB, TYPE 1
- (EE) ITEM 701011 - PORTLAND CEMENT CONCRETE CURB, TYPE 2
- (FF) ITEM 701020 - INTEGRAL PORTLAND CEMENT CONCRETE CURB AND GUTTER, TYPE 1
- (GG) ITEM 701023 - INTEGRAL PORTLAND CEMENT CONCRETE CURB AND GUTTER, TYPE 4
- (HH) ITEM 701026 - PORTLAND CEMENT CONCRETE MONOLITHIC MEDIAN
- (II) ITEM 701027 - PORTLAND CEMENT CONCRETE CURB, TYPE 1 MODIFIED
- (JJ) ITEM 720658 - PCC SAFETY BARRIER PERMANENT SINGLE FACE, MODIFIED, TYPE 5
- (KK) ITEM 720050 - GALVANIZED STEEL BEAM GUARDRAIL, TYPE 1
- (LL) ITEM 760507 - PROFILE MILLING, HOT-MIX
- (MM) ITEM 720656 - PCC SAFETY BARRIER PERMANENT, SINGLE FACE, MODIFIED, TYPE 3
- (NN) ITEM 720657 - PCC SAFETY BARRIER PERMANENT, SINGLE FACE, MODIFIED, TYPE 4
- (OO) ITEM 720651 - PCC SAFETY BARRIER PERMANENT, DOUBLE FACE, BIFURCATED, TYPE 1
- (PP) ITEM 720652 - PCC SAFETY BARRIER PERMANENT, DOUBLE FACE, BIFURCATED, TYPE 2
- (RR) ITEM 401668 - SUPERPAVE, TYPE C HOT-MIX, 160 GYRATIONS, PG 64-22, WEDGE
- (SS) ITEM 401669 - SUPERPAVE, TYPE B HOT-MIX, 160 GYRATIONS, PG 64-22, WEDGE

PAVEMENT LIFT NOTE:

THE MAXIMUM LIFTS FOR THE INDIVIDUAL PAVING MATERIAL ARE AS FOLLOWS:
SUPERPAVE, TYPE C HOT-MIX - 2"
SUPERPAVE, TYPE B HOT-MIX - 3"
SUPERPAVE, BIT. CONC. BASE COURSE - 6"
GRADED AGGREGATE BASE COURSE - 8"

NOTES:

1) THE PGA IS APPLIED TO THE TOP OF THE FINAL PAVEMENT SURFACE.

2/15/2011 12:15:13 PM
M:\PROJECTS\2003\03059_DELTRNPK\SRIMALL\CADD\2809003\PLANS\TS22_SR1.DGN

DELAWARE DEPARTMENT OF TRANSPORTATION	ADDENDUMS / REVISIONS	NOT TO SCALE	SR1 / I-95 INTERCHANGE	CONTRACT 28-090-03	BRIDGE NO.	TYPICAL SECTIONS	SHEET NO. 28
	ADDENDUM NO. 3 CHANGED ITEM NO., 02/18/2011, RLS			COUNTY NEW CASTLE	DESIGNED BY:		TOTAL SHTS. 803
					CHECKED BY:		

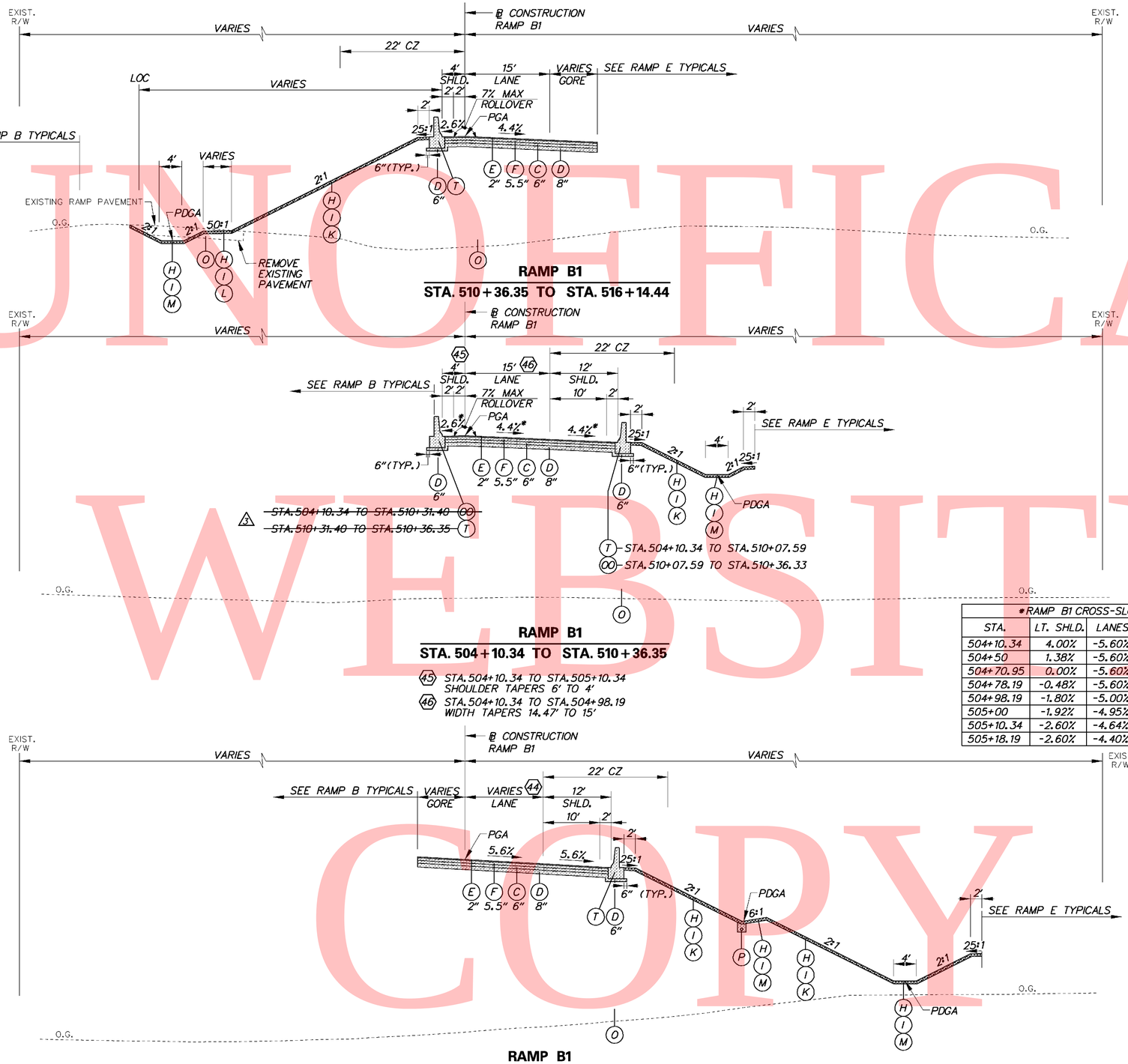

*RAMP B1 CROSS-SLOPES

STA.	LT. SHLD.	LANES	RT. SHLD.
504+10.34	4.00%	-5.60%	-5.60%
504+50	1.38%	-5.60%	-5.60%
504+70.95	0.00%	-5.60%	-5.60%
504+78.19	-0.48%	-5.60%	-5.60%
504+98.19	-1.80%	-5.00%	-5.00%
505+00	-1.92%	-4.95%	-4.95%
505+10.34	-2.60%	-4.64%	-4.64%
505+18.19	-2.60%	-4.40%	-4.40%

LEGEND

- (A) ITEM 401708 - SUPERPAVE, TYPE C HOT-MIX, 160 GYRATIONS, PG 70-22 (NON-CARBONATE STONE)
- (B) ITEM 401654 - SUPERPAVE, TYPE B HOT-MIX, 160 GYRATIONS, PG 70-22
- (C) ITEM 401663 - SUPERPAVE, BITUMINOUS CONCRETE BASE COURSE, 160 GYRATIONS, PG 64-22
- (D) ITEM 302007 - GRADED AGGREGATE BASE COURSE, TYPE B
- (E) ITEM 401711 - SUPERPAVE, TYPE C HOT-MIX, 160 GYRATIONS, PG 76-22 (NON-CARBONATE STONE)
- (F) ITEM 401660 - SUPERPAVE, TYPE B HOT-MIX, 160 GYRATIONS, PG 76-22
- (G) ITEM 501006 - PORTLAND CEMENT CONCRETE PAVEMENT, 12"
- (H) ITEM 732002 - TOPSOIL, 6" DEPTH
- (I) ITEM 734013 - PERMANENT GRASS SEEDING, DRY GROUND
- (J) ITEM 602017 - PCC MASONRY, PARAPET, CLASS A
- (K) ITEM 735533 - SOIL RETENTION BLANKET MULCH, TYPE 3
- (L) ITEM 735534 - SOIL RETENTION BLANKET MULCH, TYPE 4
- (M) ITEM 735535 - SOIL RETENTION BLANKET MULCH, TYPE 5, UNLESS OTHERWISE NOTED, SEE DRAINAGE PLANS FOR LIMITS AND TYPE
- (N) ITEM 209001 - BORROW, TYPE A
- (O) ITEM 209006 - BORROW, TYPE F OR APPROVED PROJECT EXCAVATION
- (P) ITEM 715001 - PERFORATED PIPE UNDERDRAINS, 6"
- (Q) ITEM 760504 - RUMBLE STRIPS, HOT-MIX
- (R) ITEM 602772 - MECHANICALLY STABILIZED EARTH WALLS
- (S) ITEM 602773 - PCC MASONRY FOR MECHANICALLY STABILIZED EARTH WALLS
- (T) ITEM ~~720512~~ 3 720529 - PCC SAFETY BARRIER PERMANENT, SINGLE FACE
- (U) ITEM 720654 - PCC SAFETY BARRIER PERMANENT, SINGLE FACE, MODIFIED TYPE 1
- (V) ITEM 720587 - PCC SAFETY BARRIER PERMANENT, DOUBLE FACE, MODIFIED
- (W) ITEM 720655 - PCC SAFETY BARRIER PERMANENT, SINGLE FACE, MODIFIED TYPE 2
- (X) ITEM 712005 - RIPRAP, R-4
- (Y) ITEM 401665 - SUPERPAVE, TYPE C HOT-MIX, 160 GYRATIONS, PG 64-22, PATCHING
- (Z) ITEM 401666 - SUPERPAVE, TYPE B HOT-MIX, 160 GYRATIONS, PG 64-22, PATCHING
- (AA) ITEM 401667 - SUPERPAVE, BITUMINOUS CONCRETE BASE COURSE, 160 GYRATIONS, PG 64-22, PATCHING
- (BB) ITEM 302008 - GRADED AGGREGATE BASE COURSE, TYPE B, PATCHING
- (CC) ITEM 755000 - HOT-MIX, HOT LAID, BITUMINOUS CONCRETE CURB
- (DD) ITEM 701010 - PORTLAND CEMENT CONCRETE CURB, TYPE 1
- (EE) ITEM 701011 - PORTLAND CEMENT CONCRETE CURB, TYPE 2
- (FF) ITEM 701020 - INTEGRAL PORTLAND CEMENT CONCRETE CURB AND GUTTER, TYPE 1
- (GG) ITEM 701023 - INTEGRAL PORTLAND CEMENT CONCRETE CURB AND GUTTER, TYPE 4
- (HH) ITEM 701026 - PORTLAND CEMENT CONCRETE MONOLITHIC MEDIAN
- (II) ITEM 701027 - PORTLAND CEMENT CONCRETE CURB, TYPE 1 MODIFIED
- (JJ) ITEM 720658 - PCC SAFETY BARRIER PERMANENT SINGLE FACE, MODIFIED, TYPE 5
- (KK) ITEM 720050 - GALVANIZED STEEL BEAM GUARDRAIL, TYPE 1
- (LL) ITEM 760507 - PROFILE MILLING, HOT-MIX
- (MM) ITEM 720656 - PCC SAFETY BARRIER PERMANENT, SINGLE FACE, MODIFIED, TYPE 3
- (NN) ITEM 720657 - PCC SAFETY BARRIER PERMANENT, SINGLE FACE, MODIFIED, TYPE 4
- (OO) ITEM 720651 - PCC SAFETY BARRIER PERMANENT, DOUBLE FACE, BIFURCATED, TYPE 1
- (PP) ITEM 720652 - PCC SAFETY BARRIER PERMANENT, DOUBLE FACE, BIFURCATED, TYPE 2
- (RR) ITEM 401668 - SUPERPAVE, TYPE C HOT-MIX, 160 GYRATIONS, PG 64-22, WEDGE
- (SS) ITEM 401669 - SUPERPAVE, TYPE B HOT-MIX, 160 GYRATIONS, PG 64-22, WEDGE

PAVEMENT LIFT NOTE:

THE MAXIMUM LIFTS FOR THE INDIVIDUAL PAVING MATERIAL ARE AS FOLLOWS:
SUPERPAVE, TYPE C HOT-MIX - 2"
SUPERPAVE, TYPE B HOT-MIX - 3"
SUPERPAVE, BIT. CONC. BASE COURSE - 6"
GRADED AGGREGATE BASE COURSE - 8"

NOTES:

1) THE PGA IS APPLIED TO THE TOP OF THE FINAL PAVEMENT SURFACE.

UNOFFICIAL WEBSITE COPY

2/28/2011 3:56:43 PM
M:\PROJECTS\2003\03059_DELTRNPK\SRTMALL\CADD\2809003\PLANS\TS23_SR1.DGN

DELAWARE DEPARTMENT OF TRANSPORTATION

ADDENDUMS / REVISIONS	
ADDENDUM NO. 3 CHANGED ITEM NO., CHANGED BARRIER LIMITS, 02/18/2011, RLS	

NOT TO SCALE

SR1 / I-95 INTERCHANGE

CONTRACT	BRIDGE NO.
28-090-03	
COUNTY	DESIGNED BY:
NEW CASTLE	CHECKED BY:

TYPICAL SECTIONS

SHEET NO.
29
TOTAL SHTS.
803

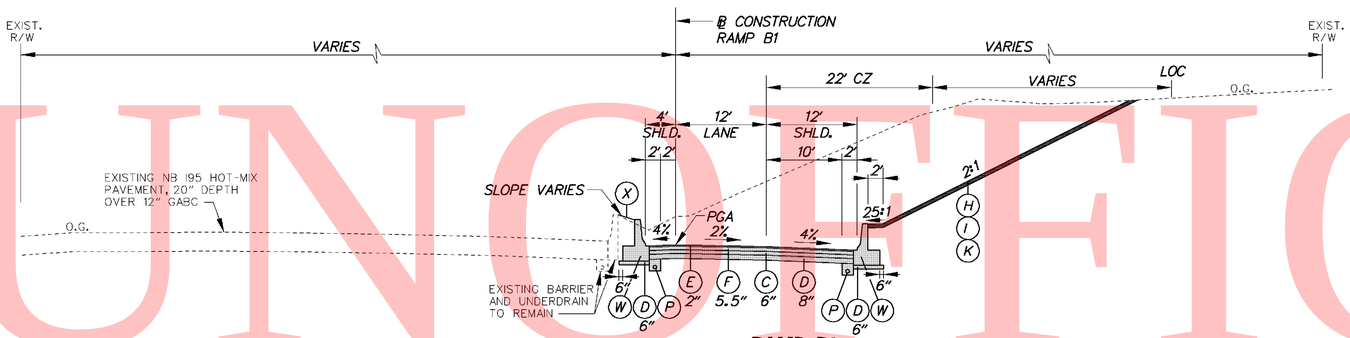

RAMP B1

STA. 536+08.93 TO STA. 541+44.20

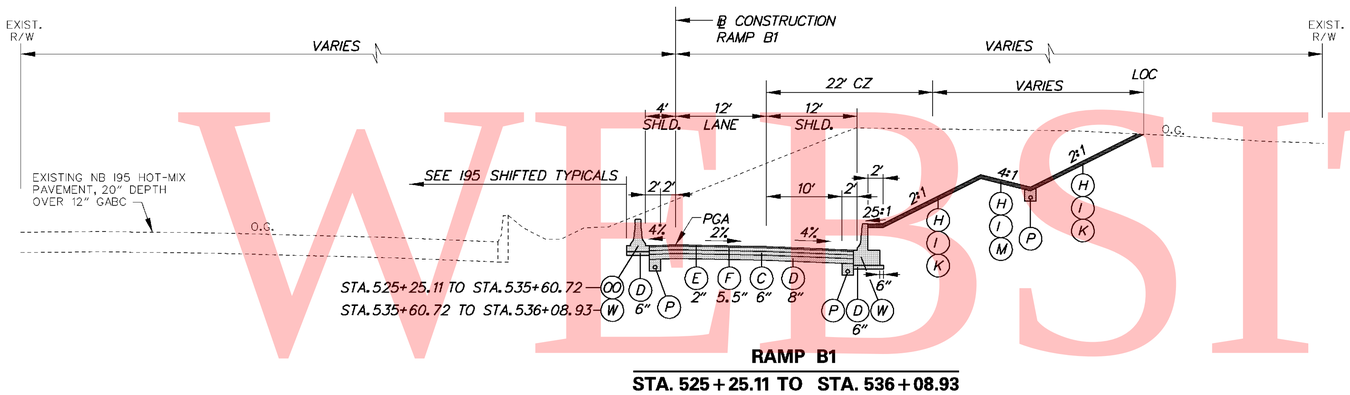

RAMP B1

STA. 525+25.11 TO STA. 536+08.93

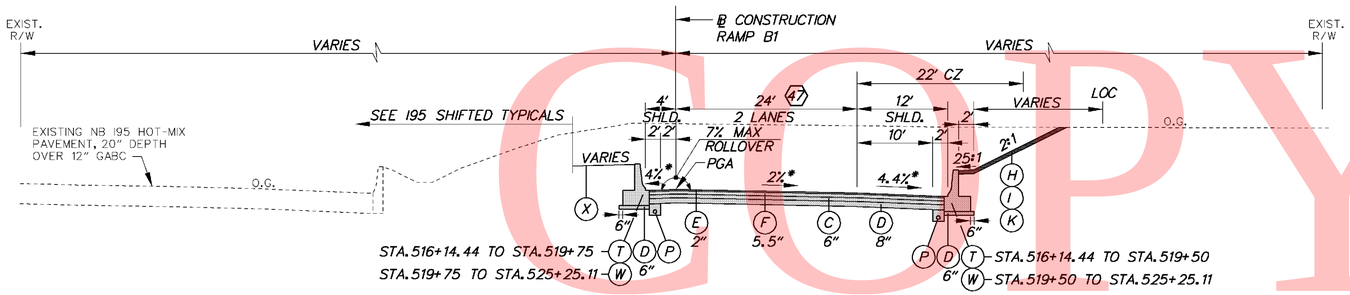

RAMP B1

STA. 516+14.44 TO STA. 525+25.11

47 STA. 516+14.44 TO STA. 520+26.72
WIDTH TAPERS 30' TO 24'

STA. 524+18.83 TO STA. 527+18.83
WIDTH TAPERS 24' TO 12'

*RAMP B1 CROSS-SLOPES			
STA.	LT. SHLD.	LANES	RT. SHLD.
518+13.79	-2.60%	-4.40%	-4.40%
518+33.79	-3.00%	-4.00%	-4.00%
518+50	-3.32%	-3.68%	-4.00%
518+83.79	-4.00%	-3.00%	-4.00%
518+87.12	-4.00%	-2.93%	-4.00%
519+00	-4.00%	-2.68%	-4.00%
519+33.79	-4.00%	-2.00%	-4.00%

LEGEND

- (A) ITEM 401708 - SUPERPAVE, TYPE C HOT-MIX, 160 GYRATIONS, PG 70-22 (NON-CARBONATE STONE)
- (B) ITEM 401654 - SUPERPAVE, TYPE B HOT-MIX, 160 GYRATIONS, PG 70-22
- (C) ITEM 401663 - SUPERPAVE, BITUMINOUS CONCRETE BASE COURSE, 160 GYRATIONS, PG 64-22
- (D) ITEM 302007 - GRADED AGGREGATE BASE COURSE, TYPE B
- (E) ITEM 401711 - SUPERPAVE, TYPE C HOT-MIX, 160 GYRATIONS, PG 76-22 (NON-CARBONATE STONE)
- (F) ITEM 401660 - SUPERPAVE, TYPE B HOT-MIX, 160 GYRATIONS, PG 76-22
- (G) ITEM 501006 - PORTLAND CEMENT CONCRETE PAVEMENT, 12"
- (H) ITEM 732002 - TOPSOIL, 6" DEPTH
- (I) ITEM 734013 - PERMANENT GRASS SEEDING, DRY GROUND
- (J) ITEM 602017 - PCC MASONRY, PARAPET, CLASS A
- (K) ITEM 735533 - SOIL RETENTION BLANKET MULCH, TYPE 3
- (L) ITEM 735534 - SOIL RETENTION BLANKET MULCH, TYPE 4
- (M) ITEM 735535 - SOIL RETENTION BLANKET MULCH, TYPE 5, UNLESS OTHERWISE NOTED, SEE DRAINAGE PLANS FOR LIMITS AND TYPE
- (N) ITEM 209001 - BORROW, TYPE A
- (O) ITEM 209006 - BORROW, TYPE F OR APPROVED PROJECT EXCAVATION
- (P) ITEM 715001 - PERFORATED PIPE UNDERDRAINS, 6"
- (Q) ITEM 760504 - RUMBLE STRIPS, HOT-MIX
- (R) ITEM 602772 - MECHANICALLY STABILIZED EARTH WALLS
- (S) ITEM 602773 - PCC MASONRY FOR MECHANICALLY STABILIZED EARTH WALLS
- (T) ITEM ~~720512~~ 3 720529 - PCC SAFETY BARRIER PERMANENT, SINGLE FACE
- (U) ITEM 720654 - PCC SAFETY BARRIER PERMANENT, SINGLE FACE, MODIFIED TYPE 1
- (V) ITEM 720587 - PCC SAFETY BARRIER PERMANENT, DOUBLE FACE, MODIFIED
- (W) ITEM 720655 - PCC SAFETY BARRIER PERMANENT, SINGLE FACE, MODIFIED TYPE 2
- (X) ITEM 712005 - RIPRAP, R-4
- (Y) ITEM 401665 - SUPERPAVE, TYPE C HOT-MIX, 160 GYRATIONS, PG 64-22, PATCHING
- (Z) ITEM 401666 - SUPERPAVE, TYPE B HOT-MIX, 160 GYRATIONS, PG 64-22, PATCHING
- (AA) ITEM 401667 - SUPERPAVE, BITUMINOUS CONCRETE BASE COURSE, 160 GYRATIONS, PG 64-22, PATCHING
- (BB) ITEM 302008 - GRADED AGGREGATE BASE COURSE, TYPE B, PATCHING
- (CC) ITEM 755000 - HOT-MIX, HOT LAID, BITUMINOUS CONCRETE CURB
- (DD) ITEM 701010 - PORTLAND CEMENT CONCRETE CURB, TYPE 1
- (EE) ITEM 701011 - PORTLAND CEMENT CONCRETE CURB, TYPE 2
- (FF) ITEM 701020 - INTEGRAL PORTLAND CEMENT CONCRETE CURB AND GUTTER, TYPE 1
- (GG) ITEM 701023 - INTEGRAL PORTLAND CEMENT CONCRETE CURB AND GUTTER, TYPE 4
- (HH) ITEM 701026 - PORTLAND CEMENT CONCRETE MONOLITHIC MEDIAN
- (II) ITEM 701027 - PORTLAND CEMENT CONCRETE CURB, TYPE 1 MODIFIED
- (JJ) ITEM 720658 - PCC SAFETY BARRIER PERMANENT SINGLE FACE, MODIFIED, TYPE 5
- (KK) ITEM 720050 - GALVANIZED STEEL BEAM GUARDRAIL, TYPE 1
- (LL) ITEM 760507 - PROFILE MILLING, HOT-MIX
- (MM) ITEM 720656 - PCC SAFETY BARRIER PERMANENT, SINGLE FACE, MODIFIED, TYPE 3
- (NN) ITEM 720657 - PCC SAFETY BARRIER PERMANENT, SINGLE FACE, MODIFIED, TYPE 4
- (OO) ITEM 720651 - PCC SAFETY BARRIER PERMANENT, DOUBLE FACE, BIFURCATED, TYPE 1
- (PP) ITEM 720652 - PCC SAFETY BARRIER PERMANENT, DOUBLE FACE, BIFURCATED, TYPE 2
- (RR) ITEM 401668 - SUPERPAVE, TYPE C HOT-MIX, 160 GYRATIONS, PG 64-22, WEDGE
- (SS) ITEM 401669 - SUPERPAVE, TYPE B HOT-MIX, 160 GYRATIONS, PG 64-22, WEDGE

PAVEMENT LIFT NOTE:

THE MAXIMUM LIFTS FOR THE INDIVIDUAL PAVING MATERIAL ARE AS FOLLOWS:
SUPERPAVE, TYPE C HOT-MIX - 2"
SUPERPAVE, TYPE B HOT-MIX - 3"
SUPERPAVE, BIT. CONC. BASE COURSE - 6"
GRADED AGGREGATE BASE COURSE - 8"

NOTES:

1) THE PGA IS APPLIED TO THE TOP OF THE FINAL PAVEMENT SURFACE.

UNOFFICIAL WEBSITE COPY

2/15/2011 12:21:57 PM
M:\PROJECTS\2003\03059_DELTRNPK\SRIMALL\CADD\2809003\PLANS\TS24_SR1.DGN

DELAWARE DEPARTMENT OF TRANSPORTATION

ADDENDUMS / REVISIONS	
ADDENDUM NO. 3 CHANGED ITEM NO.,	
02/18/2011, RLS	

NOT TO SCALE

SR1 / I-95 INTERCHANGE

CONTRACT	BRIDGE NO.	
28-090-03	DESIGNED BY:	
COUNTY	CHECKED BY:	
NEW CASTLE		

TYPICAL SECTIONS

SHEET NO.
30
TOTAL SHTS.
803

UNOFFICIAL WEBSITE COPY

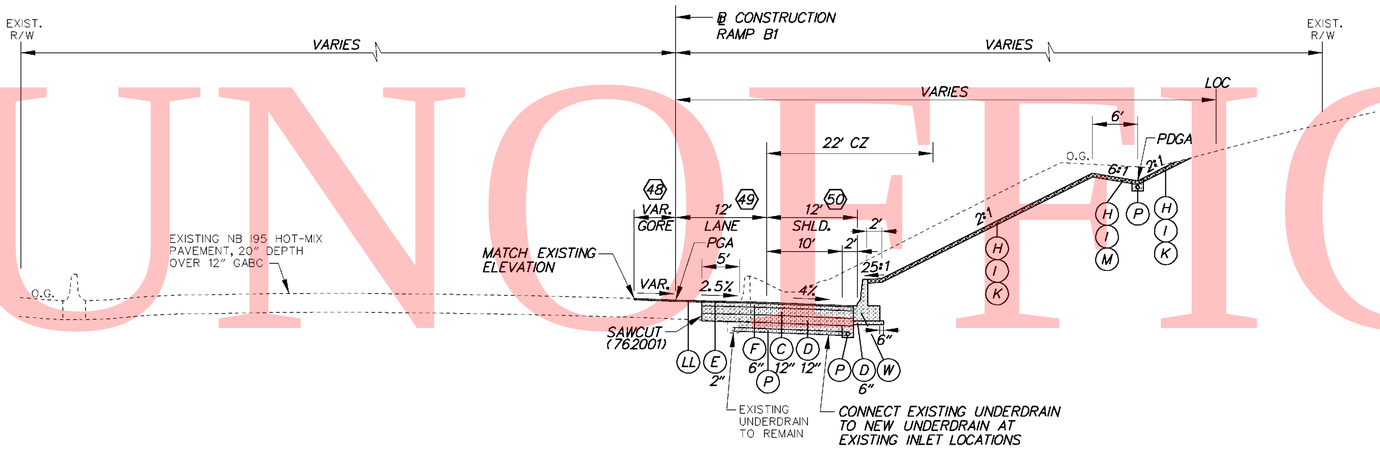

RAMP B1

STA. 542+54.46 TO STA. 562+34.22

(48) STA. 542+54.46 TO STA. 549+00.02
WIDTH TAPERS 20' TO 0'

(49) STA. 559+34.22 TO STA. 562+34.22
WIDTH TAPERS 12' TO 0'

(50) STA. 547+19.75 TO STA. 549+00.00
SHOULDER TAPERS 12' TO 14'

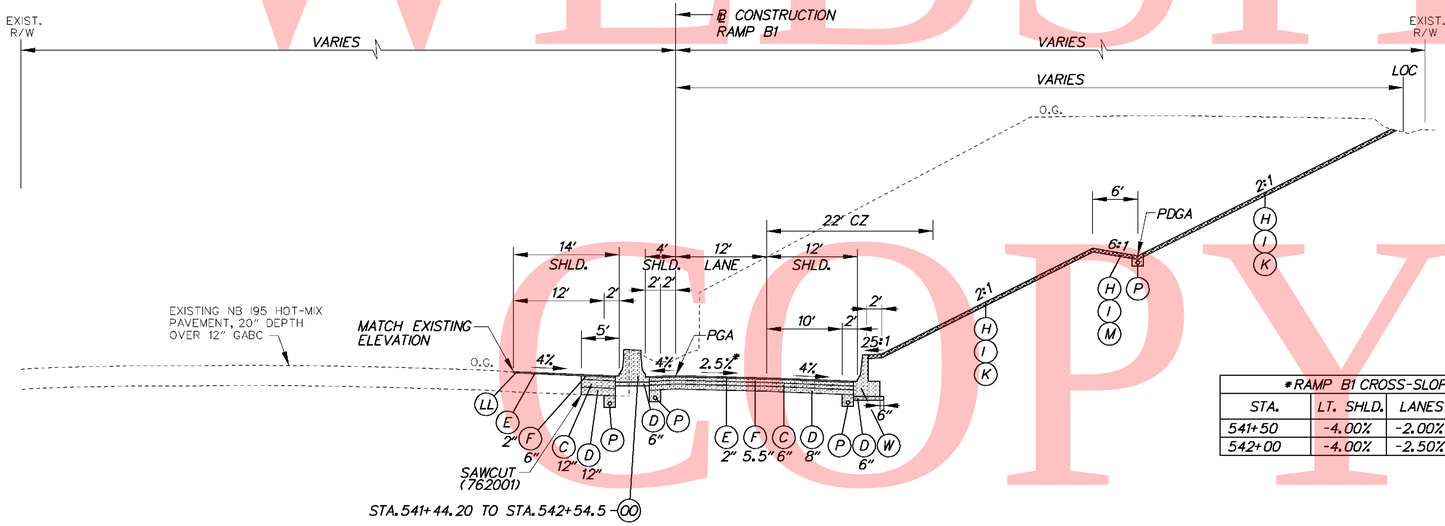

*RAMP B1 CROSS-SLOPES			
STA.	LT. SHLD.	LANES	RT. SHLD.
541+50	-4.00%	-2.00%	-4.00%
542+00	-4.00%	-2.50%	-4.00%

RAMP B1

STA. 541+44.20 TO STA. 542+59.46

LEGEND

- (A) ITEM 401708 - SUPERPAVE, TYPE C HOT-MIX, 160 GYRATIONS, PG 70-22 (NON-CARBONATE STONE)
- (B) ITEM 401654 - SUPERPAVE, TYPE B HOT-MIX, 160 GYRATIONS, PG 70-22
- (C) ITEM 401663 - SUPERPAVE, BITUMINOUS CONCRETE BASE COURSE, 160 GYRATIONS, PG 64-22
- (D) ITEM 302007 - GRADED AGGREGATE BASE COURSE, TYPE B
- (E) ITEM 401711 - SUPERPAVE, TYPE C HOT-MIX, 160 GYRATIONS, PG 76-22 (NON-CARBONATE STONE)
- (F) ITEM 401660 - SUPERPAVE, TYPE B HOT-MIX, 160 GYRATIONS, PG 76-22
- (G) ITEM 501006 - PORTLAND CEMENT CONCRETE PAVEMENT, 12"
- (H) ITEM 732002 - TOPSOIL, 6" DEPTH
- (I) ITEM 734013 - PERMANENT GRASS SEEDING, DRY GROUND
- (J) ITEM 602017 - PCC MASONRY, PARAPET, CLASS A
- (K) ITEM 735533 - SOIL RETENTION BLANKET MULCH, TYPE 3
- (L) ITEM 735534 - SOIL RETENTION BLANKET MULCH, TYPE 4
- (M) ITEM 735535 - SOIL RETENTION BLANKET MULCH, TYPE 5, UNLESS OTHERWISE NOTED, SEE DRAINAGE PLANS FOR LIMITS AND TYPE
- (N) ITEM 209001 - BORROW, TYPE A
- (O) ITEM 209006 - BORROW, TYPE F OR APPROVED PROJECT EXCAVATION
- (P) ITEM 715001 - PERFORATED PIPE UNDERDRAINS, 6"
- (Q) ITEM 760504 - RUMBLE STRIPS, HOT-MIX
- (R) ITEM 602772 - MECHANICALLY STABILIZED EARTH WALLS
- (S) ITEM 602773 - PCC MASONRY FOR MECHANICALLY STABILIZED EARTH WALLS
- (T) ITEM ~~720512~~ 720529 - PCC SAFETY BARRIER PERMANENT, SINGLE FACE
- (U) ITEM 720654 - PCC SAFETY BARRIER PERMANENT, SINGLE FACE, MODIFIED TYPE 1
- (V) ITEM 720587 - PCC SAFETY BARRIER PERMANENT, DOUBLE FACE, MODIFIED
- (W) ITEM 720655 - PCC SAFETY BARRIER PERMANENT, SINGLE FACE, MODIFIED TYPE 2
- (X) ITEM 712005 - RIPRAP, R-4
- (Y) ITEM 401665 - SUPERPAVE, TYPE C HOT-MIX, 160 GYRATIONS, PG 64-22, PATCHING
- (Z) ITEM 401666 - SUPERPAVE, TYPE B HOT-MIX, 160 GYRATIONS, PG 64-22, PATCHING
- (AA) ITEM 401667 - SUPERPAVE, BITUMINOUS CONCRETE BASE COURSE, 160 GYRATIONS, PG 64-22, PATCHING
- (BB) ITEM 302008 - GRADED AGGREGATE BASE COURSE, TYPE B, PATCHING
- (CC) ITEM 755000 - HOT-MIX, HOT LAID, BITUMINOUS CONCRETE CURB
- (DD) ITEM 701010 - PORTLAND CEMENT CONCRETE CURB, TYPE 1
- (EE) ITEM 701011 - PORTLAND CEMENT CONCRETE CURB, TYPE 2
- (FF) ITEM 701020 - INTEGRAL PORTLAND CEMENT CONCRETE CURB AND GUTTER, TYPE 1
- (GG) ITEM 701023 - INTEGRAL PORTLAND CEMENT CONCRETE CURB AND GUTTER, TYPE 4
- (HH) ITEM 701026 - PORTLAND CEMENT CONCRETE MONOLITHIC MEDIAN
- (II) ITEM 701027 - PORTLAND CEMENT CONCRETE CURB, TYPE 1 MODIFIED
- (JJ) ITEM 720658 - PCC SAFETY BARRIER PERMANENT SINGLE FACE, MODIFIED, TYPE 5
- (KK) ITEM 720050 - GALVANIZED STEEL BEAM GUARDRAIL, TYPE 1
- (LL) ITEM 760507 - PROFILE MILLING, HOT-MIX
- (MM) ITEM 720656 - PCC SAFETY BARRIER PERMANENT, SINGLE FACE, MODIFIED, TYPE 3
- (NN) ITEM 720657 - PCC SAFETY BARRIER PERMANENT, SINGLE FACE, MODIFIED, TYPE 4
- (OO) ITEM 720651 - PCC SAFETY BARRIER PERMANENT, DOUBLE FACE, BIFURCATED, TYPE 1
- (PP) ITEM 720652 - PCC SAFETY BARRIER PERMANENT, DOUBLE FACE, BIFURCATED, TYPE 2
- (RR) ITEM 401668 - SUPERPAVE, TYPE C HOT-MIX, 160 GYRATIONS, PG 64-22, WEDGE
- (SS) ITEM 401669 - SUPERPAVE, TYPE B HOT-MIX, 160 GYRATIONS, PG 64-22, WEDGE

PAVEMENT LIFT NOTE:

THE MAXIMUM LIFTS FOR THE INDIVIDUAL PAVING MATERIAL ARE AS FOLLOWS:
SUPERPAVE, TYPE C HOT-MIX - 2"
SUPERPAVE, TYPE B HOT-MIX - 3"
SUPERPAVE, BIT. CONC. BASE COURSE - 6"
GRADED AGGREGATE BASE COURSE - 8"

NOTES:

1) THE PGA IS APPLIED TO THE TOP OF THE FINAL PAVEMENT SURFACE.

2/15/2011 12:23:02 PM
M:\PROJECTS\2003\03059_DELTRNPK\SRIMALL\CADD\2809003\PLANS\TS24A_SR1.DGN

DELAWARE DEPARTMENT OF TRANSPORTATION	ADDENDUMS / REVISIONS	NOT TO SCALE	SR1 / I-95 INTERCHANGE	CONTRACT 28-090-03	BRIDGE NO.	TYPICAL SECTIONS	SHEET NO. 31
	ADDENDUM NO. 3 CHANGED ITEM NO., 02/18/2011, RLS			COUNTY NEW CASTLE	DESIGNED BY:		TOTAL SHTS. 803
					CHECKED BY:		

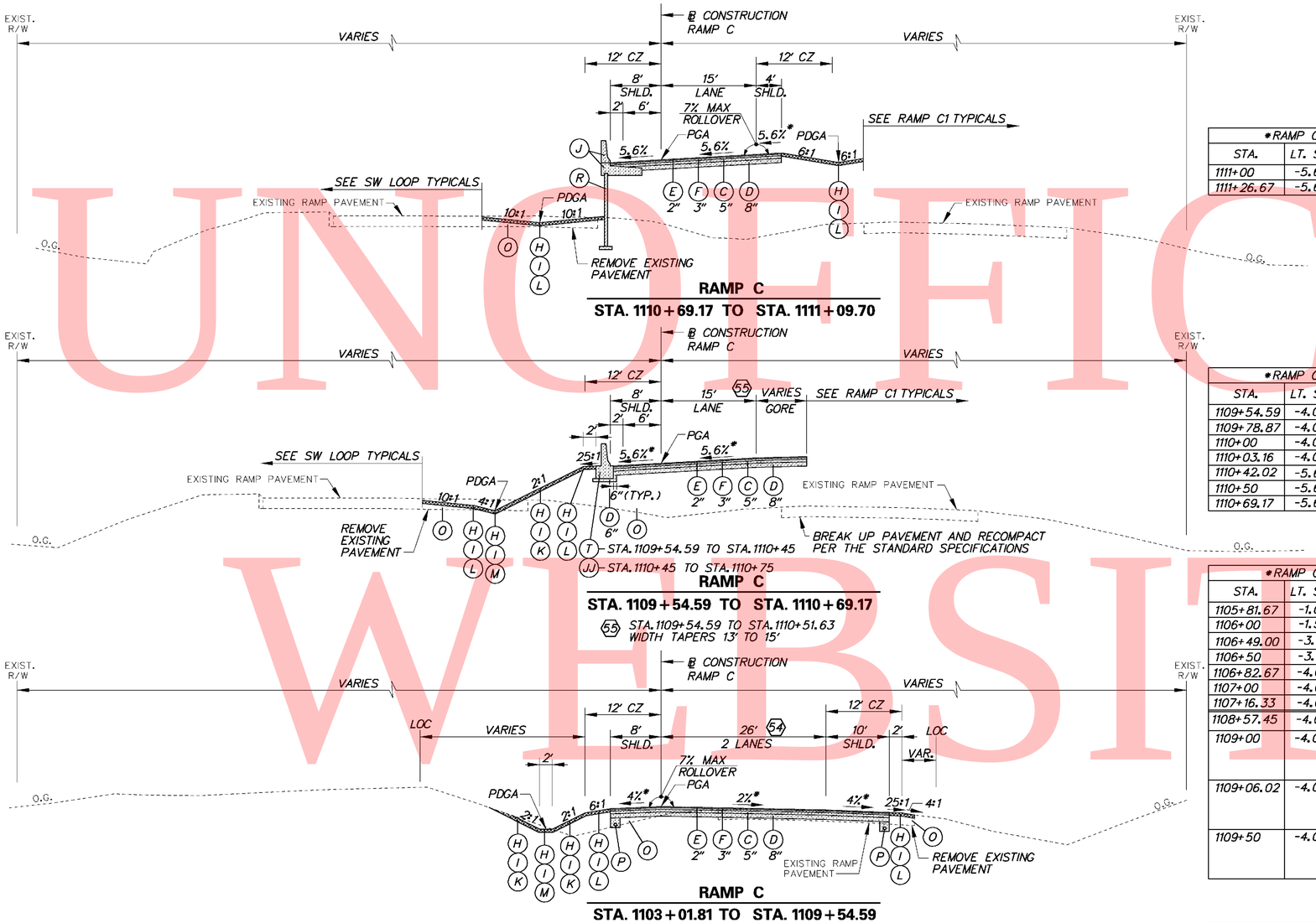

*RAMP C CROSS-SLOPES			
STA.	LT. SHLD.	LANES	RT. SHLD.
1111+00	-5.60%	5.60%	3.47%
1111+26.67	-5.60%	5.60%	5.60%

*RAMP C CROSS-SLOPES			
STA.	LT. SHLD.	LANES	RT. SHLD.
1109+54.59	-4.00%	2.00%	-
1109+78.87	-4.00%	3.00%	-
1110+00	-4.00%	3.87%	-
1110+03.16	-4.00%	4.00%	-
1110+42.02	-5.60%	5.60%	-
1110+50	-5.60%	5.60%	-
1110+69.17	-5.60%	5.60%	1.00%

*RAMP C CROSS-SLOPES			
STA.	LT. SHLD.	LANES	RT. SHLD.
1105+81.67	-1.00%	-6.00%	-6.00%
1106+00	-1.54%	-5.46%	-5.46%
1106+49.00	-3.00%	-4.00%	-4.00%
1106+50	-3.03%	-3.97%	-4.00%
1106+82.67	-4.00%	-3.00%	-4.00%
1107+00	-4.00%	-2.48%	-4.00%
1107+16.33	-4.00%	-2.00%	-4.00%
1108+57.45	-4.00%	-2.00%	-4.00%
1109+00	-4.00%	-0.25% (LEFT) -2.00% (RIGHT)	-4.00%
1109+06.02	-4.00%	0.00% (LEFT) -2.00% (RIGHT)	-4.00%
1109+50	-4.00%	1.81% (LEFT) -2.00% (RIGHT)	-4.00%

*RAMP C CROSS-SLOPES			
STA.	LT. SHLD.	LANES	RT. SHLD.
1101+50	-	-3.85%	-4.00%
1101+54.00	-	-4.00%	-4.00%
1102+00	-	-5.77%	-5.77%
1102+06.00	-	-6.00%	-6.00%

LEGEND

- (A) ITEM 401708 - SUPERPAVE, TYPE C HOT-MIX, 160 GYRATIONS, PG 70-22 (NON-CARBONATE STONE)
- (B) ITEM 401654 - SUPERPAVE, TYPE B HOT-MIX, 160 GYRATIONS, PG 70-22
- (C) ITEM 401663 - SUPERPAVE, BITUMINOUS CONCRETE BASE COURSE, 160 GYRATIONS, PG 64-22
- (D) ITEM 302007 - GRADED AGGREGATE BASE COURSE, TYPE B
- (E) ITEM 401711 - SUPERPAVE, TYPE C HOT-MIX, 160 GYRATIONS, PG 76-22 (NON-CARBONATE STONE)
- (F) ITEM 401660 - SUPERPAVE, TYPE B HOT-MIX, 160 GYRATIONS, PG 76-22
- (G) ITEM 501006 - PORTLAND CEMENT CONCRETE PAVEMENT, 12"
- (H) ITEM 732002 - TOPSOIL, 6" DEPTH
- (I) ITEM 734013 - PERMANENT GRASS SEEDING, DRY GROUND
- (J) ITEM 602017 - PCC MASONRY, PARAPET, CLASS A
- (K) ITEM 735533 - SOIL RETENTION BLANKET MULCH, TYPE 3
- (L) ITEM 735534 - SOIL RETENTION BLANKET MULCH, TYPE 4
- (M) ITEM 735535 - SOIL RETENTION BLANKET MULCH, TYPE 5, UNLESS OTHERWISE NOTED, SEE DRAINAGE PLANS FOR LIMITS AND TYPE
- (N) ITEM 209001 - BORROW, TYPE A
- (O) ITEM 209006 - BORROW, TYPE F OR APPROVED PROJECT EXCAVATION
- (P) ITEM 715001 - PERFORATED PIPE UNDERDRAINS, 6"
- (Q) ITEM 760504 - RUMBLE STRIPS, HOT-MIX
- (R) ITEM 602772 - MECHANICALLY STABILIZED EARTH WALLS
- (S) ITEM 602773 - PCC MASONRY FOR MECHANICALLY STABILIZED EARTH WALLS
- (T) ITEM ~~720512~~ 720529 - PCC SAFETY BARRIER PERMANENT, SINGLE FACE
- (U) ITEM 720654 - PCC SAFETY BARRIER PERMANENT, SINGLE FACE, MODIFIED TYPE 1
- (V) ITEM 720587 - PCC SAFETY BARRIER PERMANENT, DOUBLE FACE, MODIFIED
- (W) ITEM 720655 - PCC SAFETY BARRIER PERMANENT, SINGLE FACE, MODIFIED TYPE 2
- (X) ITEM 712005 - RIPRAP, R-4
- (Y) ITEM 401665 - SUPERPAVE, TYPE C HOT-MIX, 160 GYRATIONS, PG 64-22, PATCHING
- (Z) ITEM 401666 - SUPERPAVE, TYPE B HOT-MIX, 160 GYRATIONS, PG 64-22, PATCHING
- (AA) ITEM 401667 - SUPERPAVE, BITUMINOUS CONCRETE BASE COURSE, 160 GYRATIONS, PG 64-22, PATCHING
- (BB) ITEM 302008 - GRADED AGGREGATE BASE COURSE, TYPE B, PATCHING
- (CC) ITEM 755000 - HOT-MIX, HOT LAID, BITUMINOUS CONCRETE CURB
- (DD) ITEM 701010 - PORTLAND CEMENT CONCRETE CURB, TYPE 1
- (EE) ITEM 701011 - PORTLAND CEMENT CONCRETE CURB, TYPE 2
- (FF) ITEM 701020 - INTEGRAL PORTLAND CEMENT CONCRETE CURB AND GUTTER, TYPE 1
- (GG) ITEM 701023 - INTEGRAL PORTLAND CEMENT CONCRETE CURB AND GUTTER, TYPE 4
- (HH) ITEM 701026 - PORTLAND CEMENT CONCRETE MONOLITHIC MEDIAN
- (II) ITEM 701027 - PORTLAND CEMENT CONCRETE CURB, TYPE 1 MODIFIED
- (JJ) ITEM 720658 - PCC SAFETY BARRIER PERMANENT SINGLE FACE, MODIFIED, TYPE 5
- (KK) ITEM 720050 - GALVANIZED STEEL BEAM GUARDRAIL, TYPE 1
- (LL) ITEM 760507 - PROFILE MILLING, HOT-MIX
- (MM) ITEM 720656 - PCC SAFETY BARRIER PERMANENT, SINGLE FACE, MODIFIED, TYPE 3
- (NN) ITEM 720657 - PCC SAFETY BARRIER PERMANENT, SINGLE FACE, MODIFIED, TYPE 4
- (OO) ITEM 720651 - PCC SAFETY BARRIER PERMANENT, DOUBLE FACE, BIFURCATED, TYPE 1
- (PP) ITEM 720652 - PCC SAFETY BARRIER PERMANENT, DOUBLE FACE, BIFURCATED, TYPE 2
- (RR) ITEM 401668 - SUPERPAVE, TYPE C HOT-MIX, 160 GYRATIONS, PG 64-22, WEDGE
- (SS) ITEM 401669 - SUPERPAVE, TYPE B HOT-MIX, 160 GYRATIONS, PG 64-22, WEDGE

PAVEMENT LIFT NOTE:

THE MAXIMUM LIFTS FOR THE INDIVIDUAL PAVING MATERIAL ARE AS FOLLOWS:
SUPERPAVE, TYPE C HOT-MIX - 2"
SUPERPAVE, TYPE B HOT-MIX - 3"
SUPERPAVE, BIT. CONC. BASE COURSE - 6"
GRADED AGGREGATE BASE COURSE - 8"

NOTES:

1) THE PGA IS APPLIED TO THE TOP OF THE FINAL PAVEMENT SURFACE.

UNOFFICIAL WEBSITE COPY

2/15/2011 12:24:09 PM
M:\PROJECTS\2003\03059_DELTRNPK\SRTMALL\CADD\2809003\PLANS\TS25_SR1.DGN

DELAWARE DEPARTMENT OF TRANSPORTATION	ADDENDUMS / REVISIONS	NOT TO SCALE	SR1 / I-95 INTERCHANGE	CONTRACT 28-090-03	BRIDGE NO.	TYPICAL SECTIONS	SHEET NO. 32
	ADDENDUM NO. 3 CHANGED ITEM NO., 02/18/2011, RLS			COUNTY NEW CASTLE	DESIGNED BY: CHECKED BY:		TOTAL SHTS. 803

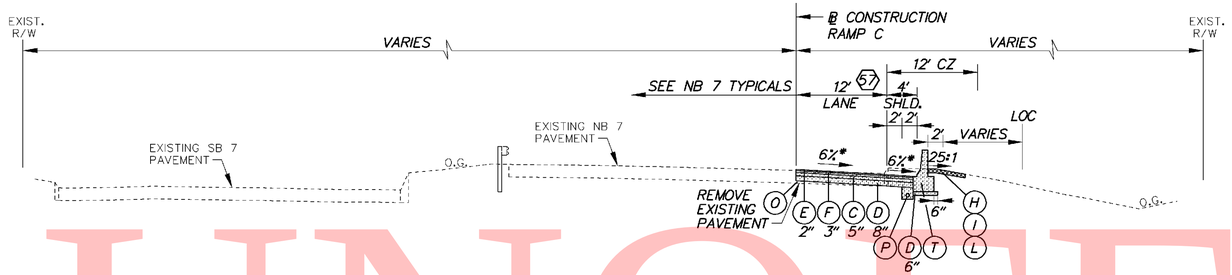

RAMP C

STA. 1121+62.88 TO STA. 1123+52.53

(57) STA. 1121+62.88 TO STA. 1121+87.76
WIDTH TAPERS 12.47' TO 12'

*RAMP C CROSS-SLOPES

STA.	LT. SHLD.	LANES	RT. SHLD.
1121+75.03	-	-3.00%	-4.00%
1121+87.76	-	-3.57%	-4.00%
1121+97.53	-	-4.00%	-4.00%
1122+00	-	-4.11%	-4.11%
1122+42.53	-	-6.00%	-6.00%
1123+07.53	-	-6.00%	-6.00%
1123+50	-	-4.11%	-4.11%
1123+52.53	-	-4.00%	-4.00%

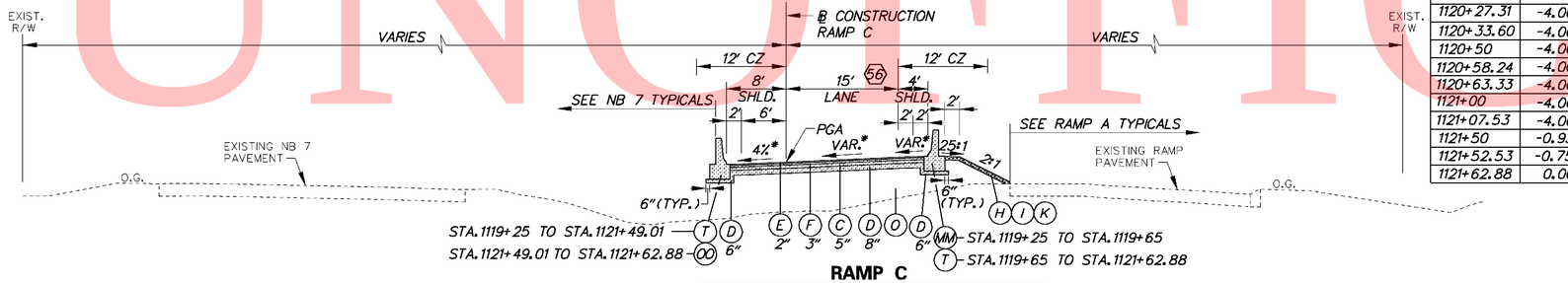

RAMP C

STA. 1119+25.00 TO STA. 1121+62.88

(56) STA. 1120+27.32 TO STA. 1121+62.88
WIDTH TAPERS 15' TO 12.47'

*RAMP C CROSS-SLOPES

STA.	LT. SHLD.	LANES	RT. SHLD.
1119+69.53	-5.60%	5.60%	5.60%
1120+00	-4.36%	4.36%	4.36%
1120+08.96	-4.00%	4.00%	4.00%
1120+27.31	-4.00%	3.26%	3.26%
1120+33.60	-4.00%	3.00%	2.69%
1120+50	-4.00%	2.33%	1.21%
1120+58.24	-4.00%	2.00%	0.46%
1120+63.33	-4.00%	1.79%	0.00%
1121+00	-4.00%	0.31%	-3.32%
1121+07.53	-4.00%	0.00%	-4.00%
1121+50	-0.93%	-1.89%	-4.00%
1121+52.53	-0.75%	-2.00%	-4.00%
1121+62.88	0.00%	-2.46%	-4.00%

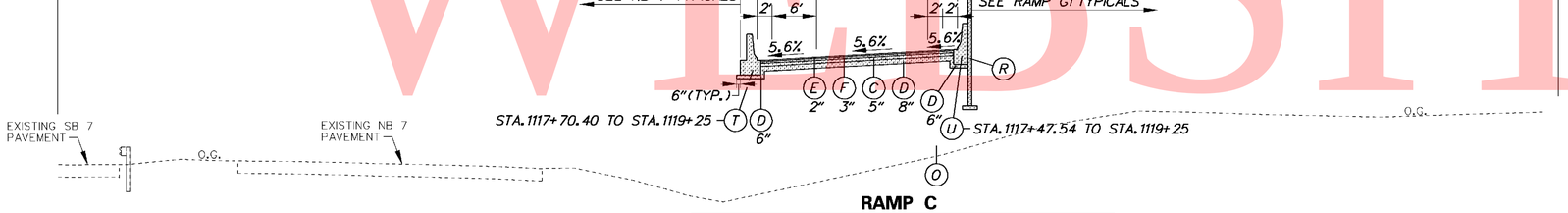

RAMP C

STA. 1117+54.25 (BRIDGE) TO STA. 1119+25.00

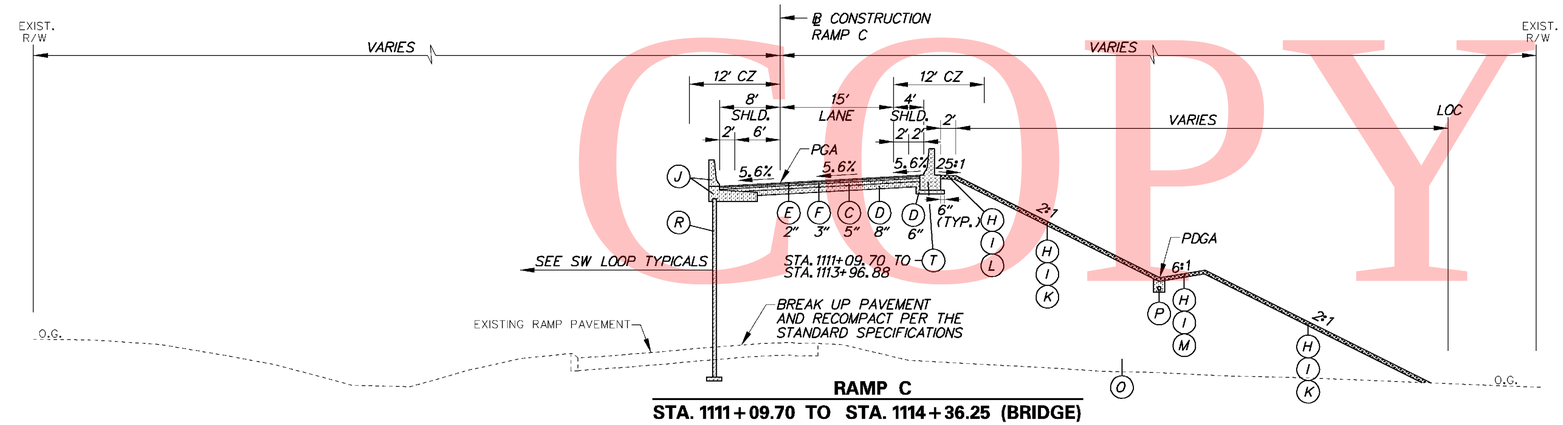

RAMP C

STA. 1111+09.70 TO STA. 1114+36.25 (BRIDGE)

LEGEND

- (A) ITEM 401708 - SUPERPAVE, TYPE C HOT-MIX, 160 GYRATIONS, PG 70-22 (NON-CARBONATE STONE)
- (B) ITEM 401654 - SUPERPAVE, TYPE B HOT-MIX, 160 GYRATIONS, PG 70-22
- (C) ITEM 401663 - SUPERPAVE, BITUMINOUS CONCRETE BASE COURSE, 160 GYRATIONS, PG 64-22
- (D) ITEM 302007 - GRADED AGGREGATE BASE COURSE, TYPE B
- (E) ITEM 401711 - SUPERPAVE, TYPE C HOT-MIX, 160 GYRATIONS, PG 76-22 (NON-CARBONATE STONE)
- (F) ITEM 401660 - SUPERPAVE, TYPE B HOT-MIX, 160 GYRATIONS, PG 76-22
- (G) ITEM 501006 - PORTLAND CEMENT CONCRETE PAVEMENT, 12"
- (H) ITEM 732002 - TOPSOIL, 6" DEPTH
- (I) ITEM 734013 - PERMANENT GRASS SEEDING, DRY GROUND
- (J) ITEM 602017 - PCC MASONRY, PARAPET, CLASS A
- (K) ITEM 735533 - SOIL RETENTION BLANKET MULCH, TYPE 3
- (L) ITEM 735534 - SOIL RETENTION BLANKET MULCH, TYPE 4
- (M) ITEM 735535 - SOIL RETENTION BLANKET MULCH, TYPE 5, UNLESS OTHERWISE NOTED, SEE DRAINAGE PLANS FOR LIMITS AND TYPE
- (N) ITEM 209001 - BORROW, TYPE A
- (O) ITEM 209006 - BORROW, TYPE F OR APPROVED PROJECT EXCAVATION
- (P) ITEM 715001 - PERFORATED PIPE UNDERDRAINS, 6"
- (Q) ITEM 760504 - RUMBLE STRIPS, HOT-MIX
- (R) ITEM 602772 - MECHANICALLY STABILIZED EARTH WALLS
- (S) ITEM 602773 - PCC MASONRY FOR MECHANICALLY STABILIZED EARTH WALLS
- (T) ITEM ~~720512~~ 720529 - PCC SAFETY BARRIER PERMANENT, SINGLE FACE
- (U) ITEM 720654 - PCC SAFETY BARRIER PERMANENT, SINGLE FACE, MODIFIED TYPE 1
- (V) ITEM 720587 - PCC SAFETY BARRIER PERMANENT, DOUBLE FACE, MODIFIED
- (W) ITEM 720655 - PCC SAFETY BARRIER PERMANENT, SINGLE FACE, MODIFIED TYPE 2
- (X) ITEM 712005 - RIPRAP, R-4
- (Y) ITEM 401665 - SUPERPAVE, TYPE C HOT-MIX, 160 GYRATIONS, PG 64-22, PATCHING
- (Z) ITEM 401666 - SUPERPAVE, TYPE B HOT-MIX, 160 GYRATIONS, PG 64-22, PATCHING
- (AA) ITEM 401667 - SUPERPAVE, BITUMINOUS CONCRETE BASE COURSE, 160 GYRATIONS, PG 64-22, PATCHING
- (BB) ITEM 302008 - GRADED AGGREGATE BASE COURSE, TYPE B, PATCHING
- (CC) ITEM 755000 - HOT-MIX, HOT LAID, BITUMINOUS CONCRETE CURB
- (DD) ITEM 701010 - PORTLAND CEMENT CONCRETE CURB, TYPE 1
- (EE) ITEM 701011 - PORTLAND CEMENT CONCRETE CURB, TYPE 2
- (FF) ITEM 701020 - INTEGRAL PORTLAND CEMENT CONCRETE CURB AND GUTTER, TYPE 1
- (GG) ITEM 701023 - INTEGRAL PORTLAND CEMENT CONCRETE CURB AND GUTTER, TYPE 4
- (HH) ITEM 701026 - PORTLAND CEMENT CONCRETE MONOLITHIC MEDIAN
- (II) ITEM 701027 - PORTLAND CEMENT CONCRETE CURB, TYPE 1 MODIFIED
- (JJ) ITEM 720658 - PCC SAFETY BARRIER PERMANENT SINGLE FACE, MODIFIED, TYPE 5
- (KK) ITEM 720050 - GALVANIZED STEEL BEAM GUARDRAIL, TYPE 1
- (LL) ITEM 760507 - PROFILE MILLING, HOT-MIX
- (MM) ITEM 720656 - PCC SAFETY BARRIER PERMANENT, SINGLE FACE, MODIFIED, TYPE 3
- (NN) ITEM 720657 - PCC SAFETY BARRIER PERMANENT, SINGLE FACE, MODIFIED, TYPE 4
- (OO) ITEM 720651 - PCC SAFETY BARRIER PERMANENT, DOUBLE FACE, BIFURCATED, TYPE 1
- (PP) ITEM 720652 - PCC SAFETY BARRIER PERMANENT, DOUBLE FACE, BIFURCATED, TYPE 2
- (RR) ITEM 401668 - SUPERPAVE, TYPE C HOT-MIX, 160 GYRATIONS, PG 64-22, WEDGE
- (SS) ITEM 401669 - SUPERPAVE, TYPE B HOT-MIX, 160 GYRATIONS, PG 64-22, WEDGE

PAVEMENT LIFT NOTE:

THE MAXIMUM LIFTS FOR THE INDIVIDUAL PAVING MATERIAL ARE AS FOLLOWS:
SUPERPAVE, TYPE C HOT-MIX - 2"
SUPERPAVE, TYPE B HOT-MIX - 3"
SUPERPAVE, BIT. CONC. BASE COURSE - 6"
GRADED AGGREGATE BASE COURSE - 8"

NOTES:

1) THE PGA IS APPLIED TO THE TOP OF THE FINAL PAVEMENT SURFACE.

UNOFFICIAL WEBSITE COPY

2/15/2011 3:23:39 PM
M:\PROJECTS\2003\03059_DELTRNPK\SRTMALL\CADD\2809003\PLANS\TS26_SR1.DGN

DELAWARE DEPARTMENT OF TRANSPORTATION	ADDENDUMS / REVISIONS	NOT TO SCALE	SR1 / I-95 INTERCHANGE	CONTRACT 28-090-03	BRIDGE NO.	TYPICAL SECTIONS	SHEET NO. 33
	ADDENDUM NO. 3 CHANGED ITEM NO., 02/18/2011, RLS			COUNTY NEW CASTLE	DESIGNED BY:		TOTAL SHTS. 803
					CHECKED BY:		

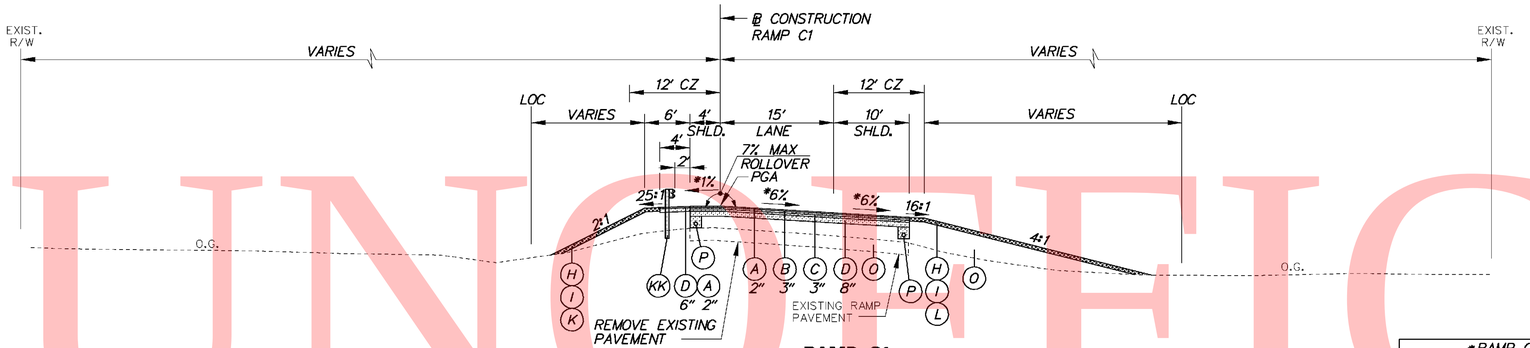

RAMP C1

STA. 1813+00.00 TO STA. 1814+74.42

*RAMP C1 CROSS-SLOPES			
STA.	LT. SHLD.	LANES	RT. SHLD.
1813+00	-1.73%	-5.27%	-5.27%
1813+17.82	-1.00%	-6.00%	-6.00%

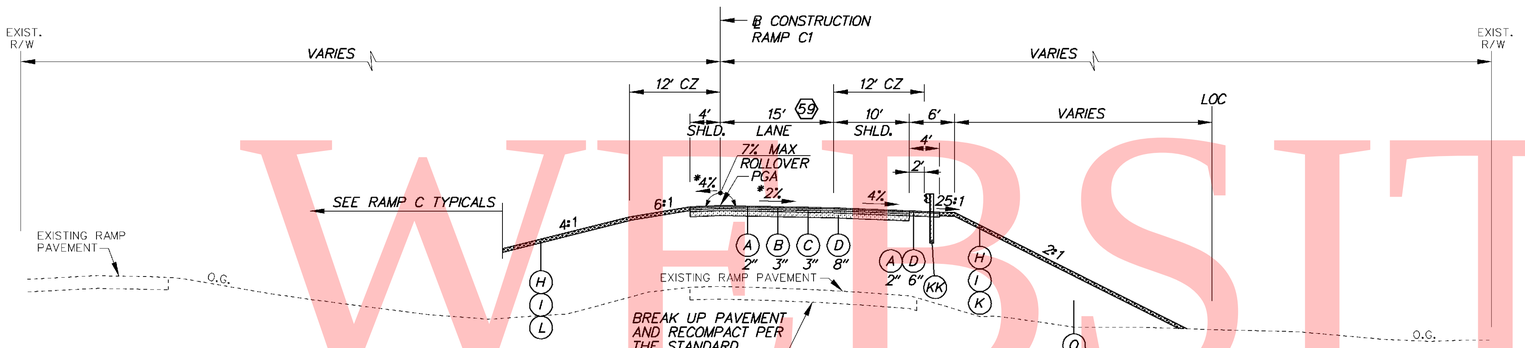

RAMP C1

STA. 1810+72.56 TO STA. 1813+00.00

59 STA. 1810+72.56 TO STA. 1810+76.79
WIDTH TAPERS 14.93' TO 15'

*RAMP C1 CROSS-SLOPES			
STA.	LT. SHLD.	LANES	RT. SHLD.
1810+72.56	0.00%	-2.00%	-4.00%
1811+00	-1.83%	-2.00%	-4.00%
1811+32.56	-4.00%	-2.00%	-4.00%
1812+19.82	-4.00%	-2.00%	-4.00%
1812+44.32	-4.00%	-3.00%	-4.00%
1812+50	-3.77%	-3.23%	-4.00%
1812+68.82	-3.00%	-4.00%	-4.00%

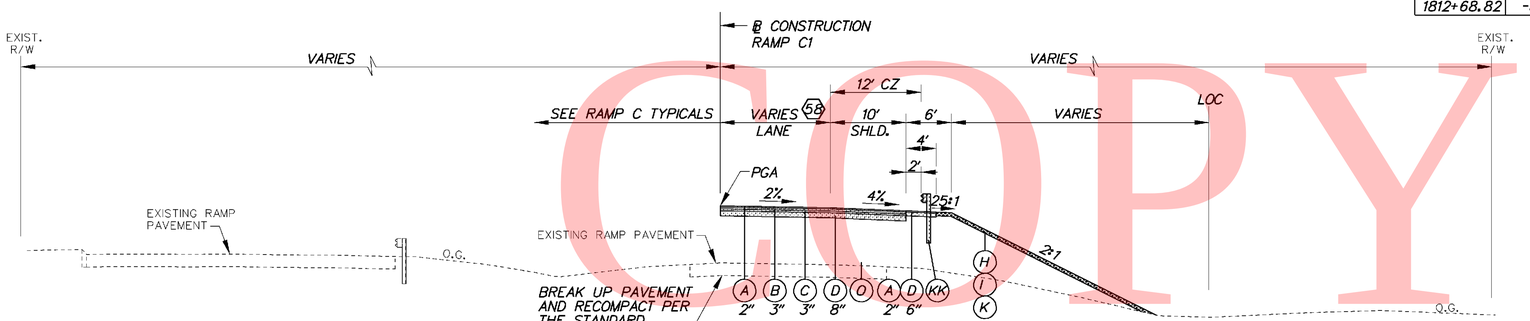

RAMP C1

STA.1809+54.59 TO STA. 1810+72.56

58 STA. 1809+54.59 TO STA. 1810+72.56
WIDTH TAPERS 13' TO 14.93'

LEGEND

- (A) ITEM 401708 - SUPERPAVE, TYPE C HOT-MIX, 160 GYRATIONS, PG 70-22 (NON-CARBONATE STONE)
- (B) ITEM 401654 - SUPERPAVE, TYPE B HOT-MIX, 160 GYRATIONS, PG 70-22
- (C) ITEM 401663 - SUPERPAVE, BITUMINOUS CONCRETE BASE COURSE, 160 GYRATIONS, PG 64-22
- (D) ITEM 302007 - GRADED AGGREGATE BASE COURSE, TYPE B
- (E) ITEM 401711 - SUPERPAVE, TYPE C HOT-MIX, 160 GYRATIONS, PG 76-22 (NON-CARBONATE STONE)
- (F) ITEM 401660 - SUPERPAVE, TYPE B HOT-MIX, 160 GYRATIONS, PG 76-22
- (G) ITEM 501006 - PORTLAND CEMENT CONCRETE PAVEMENT, 12"
- (H) ITEM 732002 - TOPSOIL, 6" DEPTH
- (I) ITEM 734013 - PERMANENT GRASS SEEDING, DRY GROUND
- (J) ITEM 602017 - PCC MASONRY, PARAPET, CLASS A
- (K) ITEM 735533 - SOIL RETENTION BLANKET MULCH, TYPE 3
- (L) ITEM 735534 - SOIL RETENTION BLANKET MULCH, TYPE 4
- (M) ITEM 735535 - SOIL RETENTION BLANKET MULCH, TYPE 5, UNLESS OTHERWISE NOTED, SEE DRAINAGE PLANS FOR LIMITS AND TYPE
- (N) ITEM 209001 - BORROW, TYPE A
- (O) ITEM 209006 - BORROW, TYPE F OR APPROVED PROJECT EXCAVATION
- (P) ITEM 715001 - PERFORATED PIPE UNDERDRAINS, 6"
- (Q) ITEM 760504 - RUMBLE STRIPS, HOT-MIX
- (R) ITEM 602772 - MECHANICALLY STABILIZED EARTH WALLS
- (S) ITEM 602773 - PCC MASONRY FOR MECHANICALLY STABILIZED EARTH WALLS
- (T) ITEM ~~720512~~ 3 720529 - PCC SAFETY BARRIER PERMANENT, SINGLE FACE
- (U) ITEM 720654 - PCC SAFETY BARRIER PERMANENT, SINGLE FACE, MODIFIED TYPE 1
- (V) ITEM 720587 - PCC SAFETY BARRIER PERMANENT, DOUBLE FACE, MODIFIED
- (W) ITEM 720655 - PCC SAFETY BARRIER PERMANENT, SINGLE FACE, MODIFIED TYPE 2
- (X) ITEM 712005 - RIPRAP, R-4
- (Y) ITEM 401665 - SUPERPAVE, TYPE C HOT-MIX, 160 GYRATIONS, PG 64-22, PATCHING
- (Z) ITEM 401666 - SUPERPAVE, TYPE B HOT-MIX, 160 GYRATIONS, PG 64-22, PATCHING
- (AA) ITEM 401667 - SUPERPAVE, BITUMINOUS CONCRETE BASE COURSE, 160 GYRATIONS, PG 64-22, PATCHING
- (BB) ITEM 302008 - GRADED AGGREGATE BASE COURSE, TYPE B, PATCHING
- (CC) ITEM 755000 - HOT-MIX, HOT LAID, BITUMINOUS CONCRETE CURB
- (DD) ITEM 701010 - PORTLAND CEMENT CONCRETE CURB, TYPE 1
- (EE) ITEM 701011 - PORTLAND CEMENT CONCRETE CURB, TYPE 2
- (FF) ITEM 701020 - INTEGRAL PORTLAND CEMENT CONCRETE CURB AND GUTTER, TYPE 1
- (GG) ITEM 701023 - INTEGRAL PORTLAND CEMENT CONCRETE CURB AND GUTTER, TYPE 4
- (HH) ITEM 701026 - PORTLAND CEMENT CONCRETE MONOLITHIC MEDIAN
- (II) ITEM 701027 - PORTLAND CEMENT CONCRETE CURB, TYPE 1 MODIFIED
- (JJ) ITEM 720658 - PCC SAFETY BARRIER PERMANENT SINGLE FACE, MODIFIED, TYPE 5
- (KK) ITEM 720050 - GALVANIZED STEEL BEAM GUARDRAIL, TYPE 1
- (LL) ITEM 760507 - PROFILE MILLING, HOT-MIX
- (MM) ITEM 720656 - PCC SAFETY BARRIER PERMANENT, SINGLE FACE, MODIFIED, TYPE 3
- (NN) ITEM 720657 - PCC SAFETY BARRIER PERMANENT, SINGLE FACE, MODIFIED, TYPE 4
- (OO) ITEM 720651 - PCC SAFETY BARRIER PERMANENT, DOUBLE FACE, BIFURCATED, TYPE 1
- (PP) ITEM 720652 - PCC SAFETY BARRIER PERMANENT, DOUBLE FACE, BIFURCATED, TYPE 2
- (RR) ITEM 401668 - SUPERPAVE, TYPE C HOT-MIX, 160 GYRATIONS, PG 64-22, WEDGE
- (SS) ITEM 401669 - SUPERPAVE, TYPE B HOT-MIX, 160 GYRATIONS, PG 64-22, WEDGE

PAVEMENT LIFT NOTE:

THE MAXIMUM LIFTS FOR THE INDIVIDUAL PAVING MATERIAL ARE AS FOLLOWS:
SUPERPAVE, TYPE C HOT-MIX - 2"
SUPERPAVE, TYPE B HOT-MIX - 3"
SUPERPAVE, BIT. CONC. BASE COURSE - 6"
GRADED AGGREGATE BASE COURSE - 8"

NOTES:

1) THE PGA IS APPLIED TO THE TOP OF THE FINAL PAVEMENT SURFACE.

UNOFFICIAL WEBSITE COPY

2/15/2011 1:31:05 PM
M:\PROJECTS\2003\03059_DELTRNPK\SRIMALL\CADD\2809003\PLANS\TS27_SR1.DGN

DELAWARE DEPARTMENT OF TRANSPORTATION	ADDENDUMS / REVISIONS	NOT TO SCALE	SR1 / I-95 INTERCHANGE	CONTRACT 28-090-03	BRIDGE NO.	TYPICAL SECTIONS	SHEET NO. 34
	ADDENDUM NO. 3 CHANGED ITEM NO., 02/18/2011, RLS			COUNTY NEW CASTLE	DESIGNED BY:		TOTAL SHTS. 803
					CHECKED BY:		

UNOFFICIAL WEBSITE COPY

*RAMP C1 CROSS-SLOPES			
STA.	LT. SHLD.	LANES	RT. SHLD.
1815+53.41	2.00%	-6.00%	-6.00%
1815+62.90	-	-6.00%	-6.00%
1816+00	-	-4.39%	-4.39%
1816+08.90	-	-4.00%	-4.00%
1816+31.90	-	-3.00%	-4.00%
1816+50	-	-2.21%	-4.00%
1816+54.90	-	-2.00%	-4.00%
1817+00	-	-0.04%	-4.00%
1817+00.90	-	0.00%	-4.00%
1817+50	-	1.80%	-4.00%
1817+55.34	-	2.00%	-4.00%
1817+82.56	-	3.00%	-4.00%
1818+00	-	3.64%	-3.36%
1818+09.79	-	4.00%	-3.00%

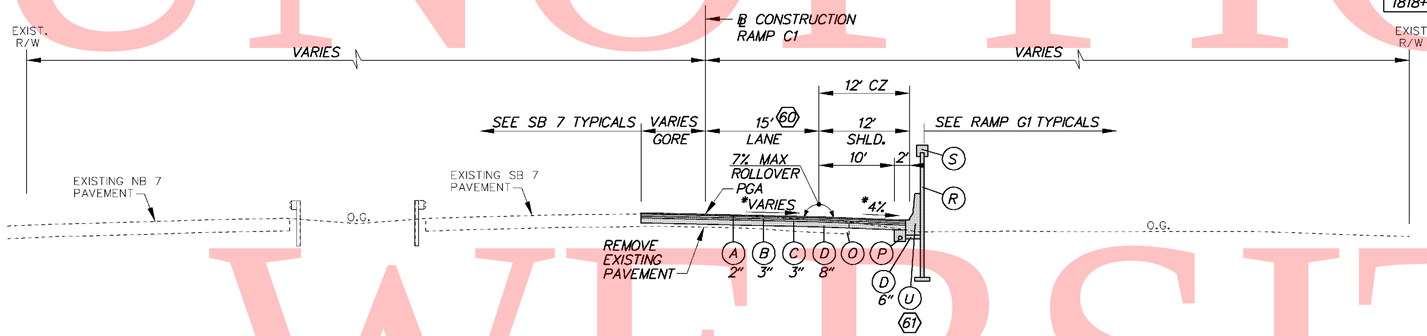

RAMP C1

STA. 1815+53.41 TO STA. 1818+09.79

60 STA. 1816+59.79 TO STA. 1818+09.79 WIDTH TAPERS 15' TO 12'

61 FROM STA. 1815+53.41 TO STA. 1815+85.06 THERE IS NO BARRIER.

*RAMP C1 CROSS-SLOPES			
STA.	LT. SHLD.	LANES	RT. SHLD.
1815+08.41	-1.00%	-6.00%	-6.00%
1815+23.41	0.00%	-6.00%	-6.00%
1815+50	1.77%	-6.00%	-6.00%

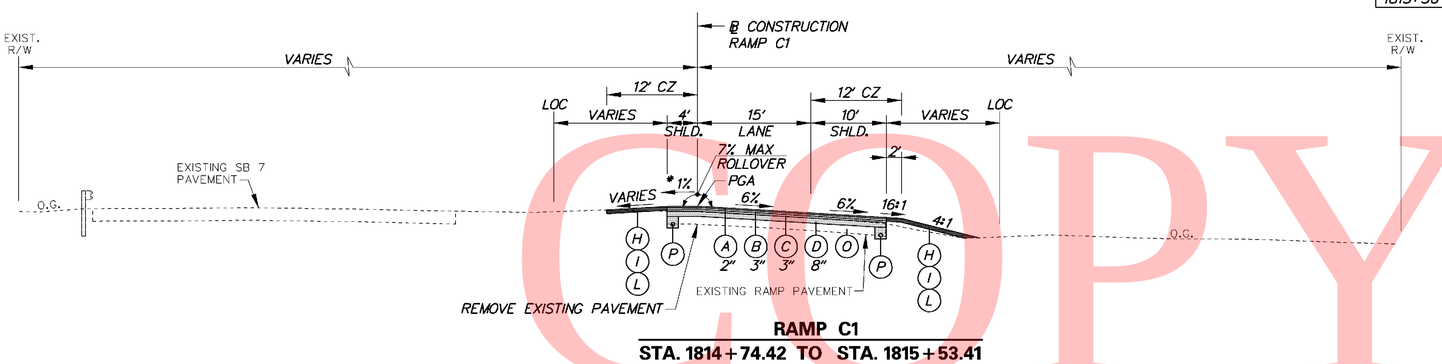

RAMP C1

STA. 1814+74.42 TO STA. 1815+53.41

LEGEND

- (A) ITEM 401708 - SUPERPAVE, TYPE C HOT-MIX, 160 GYRATIONS, PG 70-22 (NON-CARBONATE STONE)
- (B) ITEM 401654 - SUPERPAVE, TYPE B HOT-MIX, 160 GYRATIONS, PG 70-22
- (C) ITEM 401663 - SUPERPAVE, BITUMINOUS CONCRETE BASE COURSE, 160 GYRATIONS, PG 64-22
- (D) ITEM 302007 - GRADED AGGREGATE BASE COURSE, TYPE B
- (E) ITEM 401711 - SUPERPAVE, TYPE C HOT-MIX, 160 GYRATIONS, PG 76-22 (NON-CARBONATE STONE)
- (F) ITEM 401660 - SUPERPAVE, TYPE B HOT-MIX, 160 GYRATIONS, PG 76-22
- (G) ITEM 501006 - PORTLAND CEMENT CONCRETE PAVEMENT, 12"
- (H) ITEM 732002 - TOPSOIL, 6" DEPTH
- (I) ITEM 734013 - PERMANENT GRASS SEEDING, DRY GROUND
- (J) ITEM 602017 - PCC MASONRY, PARAPET, CLASS A
- (K) ITEM 735533 - SOIL RETENTION BLANKET MULCH, TYPE 3
- (L) ITEM 735534 - SOIL RETENTION BLANKET MULCH, TYPE 4
- (M) ITEM 735535 - SOIL RETENTION BLANKET MULCH, TYPE 5, UNLESS OTHERWISE NOTED, SEE DRAINAGE PLANS FOR LIMITS AND TYPE
- (N) ITEM 209001 - BORROW, TYPE A
- (O) ITEM 209006 - BORROW, TYPE F OR APPROVED PROJECT EXCAVATION
- (P) ITEM 715001 - PERFORATED PIPE UNDERDRAINS, 6"
- (Q) ITEM 760504 - RUMBLE STRIPS, HOT-MIX
- (R) ITEM 602772 - MECHANICALLY STABILIZED EARTH WALLS
- (S) ITEM 602773 - PCC MASONRY FOR MECHANICALLY STABILIZED EARTH WALLS
- (T) ITEM ~~720512~~ 3 720529 - PCC SAFETY BARRIER PERMANENT, SINGLE FACE
- (U) ITEM 720654 - PCC SAFETY BARRIER PERMANENT, SINGLE FACE, MODIFIED TYPE 1
- (V) ITEM 720587 - PCC SAFETY BARRIER PERMANENT, DOUBLE FACE, MODIFIED
- (W) ITEM 720655 - PCC SAFETY BARRIER PERMANENT, SINGLE FACE, MODIFIED TYPE 2
- (X) ITEM 712005 - RIPRAP, R-4
- (Y) ITEM 401665 - SUPERPAVE, TYPE C HOT-MIX, 160 GYRATIONS, PG 64-22, PATCHING
- (Z) ITEM 401666 - SUPERPAVE, TYPE B HOT-MIX, 160 GYRATIONS, PG 64-22, PATCHING
- (AA) ITEM 401667 - SUPERPAVE, BITUMINOUS CONCRETE BASE COURSE, 160 GYRATIONS, PG 64-22, PATCHING
- (BB) ITEM 302008 - GRADED AGGREGATE BASE COURSE, TYPE B, PATCHING
- (CC) ITEM 755000 - HOT-MIX, HOT LAID, BITUMINOUS CONCRETE CURB
- (DD) ITEM 701010 - PORTLAND CEMENT CONCRETE CURB, TYPE 1
- (EE) ITEM 701011 - PORTLAND CEMENT CONCRETE CURB, TYPE 2
- (FF) ITEM 701020 - INTEGRAL PORTLAND CEMENT CONCRETE CURB AND GUTTER, TYPE 1
- (GG) ITEM 701023 - INTEGRAL PORTLAND CEMENT CONCRETE CURB AND GUTTER, TYPE 4
- (HH) ITEM 701026 - PORTLAND CEMENT CONCRETE MONOLITHIC MEDIAN
- (II) ITEM 701027 - PORTLAND CEMENT CONCRETE CURB, TYPE 1 MODIFIED
- (JJ) ITEM 720658 - PCC SAFETY BARRIER PERMANENT SINGLE FACE, MODIFIED, TYPE 5
- (KK) ITEM 720050 - GALVANIZED STEEL BEAM GUARDRAIL, TYPE 1
- (LL) ITEM 760507 - PROFILE MILLING, HOT-MIX
- (MM) ITEM 720656 - PCC SAFETY BARRIER PERMANENT, SINGLE FACE, MODIFIED, TYPE 3
- (NN) ITEM 720657 - PCC SAFETY BARRIER PERMANENT, SINGLE FACE, MODIFIED, TYPE 4
- (OO) ITEM 720651 - PCC SAFETY BARRIER PERMANENT, DOUBLE FACE, BIFURCATED, TYPE 1
- (PP) ITEM 720652 - PCC SAFETY BARRIER PERMANENT, DOUBLE FACE, BIFURCATED, TYPE 2
- (RR) ITEM 401668 - SUPERPAVE, TYPE C HOT-MIX, 160 GYRATIONS, PG 64-22, WEDGE
- (SS) ITEM 401669 - SUPERPAVE, TYPE B HOT-MIX, 160 GYRATIONS, PG 64-22, WEDGE

PAVEMENT LIFT NOTE:

THE MAXIMUM LIFTS FOR THE INDIVIDUAL PAVING MATERIAL ARE AS FOLLOWS:
SUPERPAVE, TYPE C HOT-MIX - 2"
SUPERPAVE, TYPE B HOT-MIX - 3"
SUPERPAVE, BIT. CONC. BASE COURSE - 6"
GRADED AGGREGATE BASE COURSE - 8"

NOTES:

1) THE PGA IS APPLIED TO THE TOP OF THE FINAL PAVEMENT SURFACE.

2/15/2011 11:32:51 PM
M:\PROJECTS\2003\03059_DELTRNPK\SR1MALL\CADD\2809003\PLANS\TS28_SR1.DGN

DELAWARE DEPARTMENT OF TRANSPORTATION

ADDENDUMS / REVISIONS	
ADDENDUM NO. 3 CHANGED ITEM NO.,	
02/18/2011, RLS	

NOT TO SCALE

SR1 / I-95 INTERCHANGE

CONTRACT	BRIDGE NO.	
28-090-03	DESIGNED BY:	
COUNTY	CHECKED BY:	
NEW CASTLE		

TYPICAL SECTIONS

SHEET NO.
35
TOTAL SHTS.
803

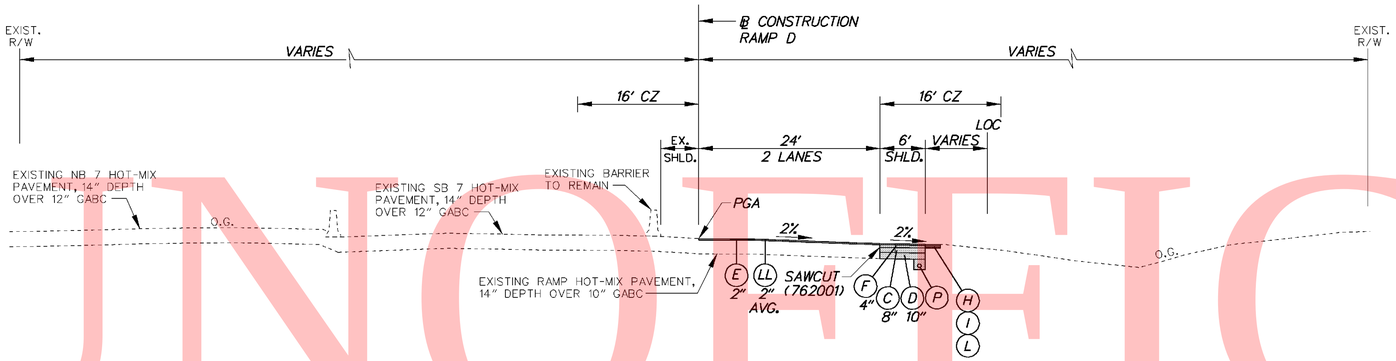

RAMP D

STA. 2105+60.16 TO STA. 2113+30.23

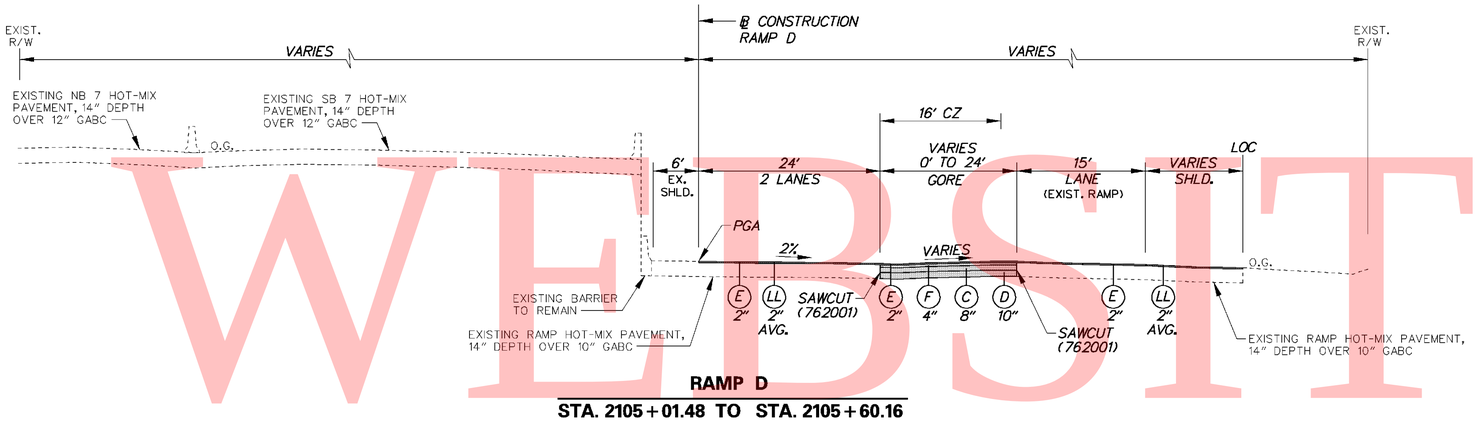

RAMP D

STA. 2105+01.48 TO STA. 2105+60.16

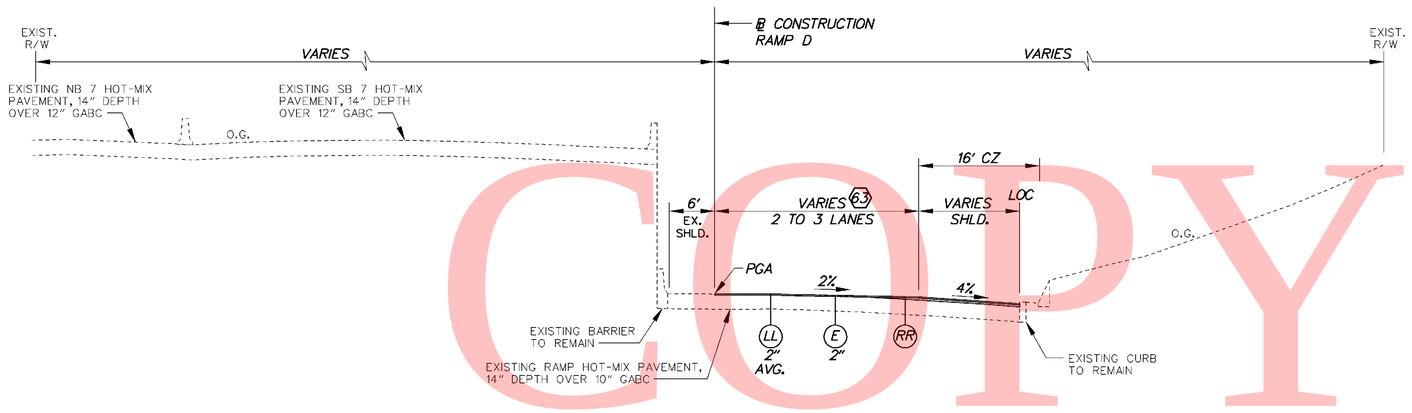

RAMP D

STA. 2103+25 TO STA. 2105+01.48

(63) STA. 2103+25 TO STA. 2105+01.48
WIDTH TAPERS 24' TO 39.67'

LEGEND

- (A) ITEM 401708 - SUPERPAVE, TYPE C HOT-MIX, 160 GYRATIONS, PG 70-22 (NON-CARBONATE STONE)
- (B) ITEM 401654 - SUPERPAVE, TYPE B HOT-MIX, 160 GYRATIONS, PG 70-22
- (C) ITEM 401663 - SUPERPAVE, BITUMINOUS CONCRETE BASE COURSE, 160 GYRATIONS, PG 64-22
- (D) ITEM 302007 - GRADED AGGREGATE BASE COURSE, TYPE B
- (E) ITEM 401711 - SUPERPAVE, TYPE C HOT-MIX, 160 GYRATIONS, PG 76-22 (NON-CARBONATE STONE)
- (F) ITEM 401660 - SUPERPAVE, TYPE B HOT-MIX, 160 GYRATIONS, PG 76-22
- (G) ITEM 501006 - PORTLAND CEMENT CONCRETE PAVEMENT, 12"
- (H) ITEM 732002 - TOPSOIL, 6" DEPTH
- (I) ITEM 734013 - PERMANENT GRASS SEEDING, DRY GROUND
- (J) ITEM 602017 - PCC MASONRY, PARAPET, CLASS A
- (K) ITEM 735533 - SOIL RETENTION BLANKET MULCH, TYPE 3
- (L) ITEM 735534 - SOIL RETENTION BLANKET MULCH, TYPE 4
- (M) ITEM 735535 - SOIL RETENTION BLANKET MULCH, TYPE 5, UNLESS OTHERWISE NOTED, SEE DRAINAGE PLANS FOR LIMITS AND TYPE
- (N) ITEM 209001 - BORROW, TYPE A
- (O) ITEM 209006 - BORROW, TYPE F OR APPROVED PROJECT EXCAVATION
- (P) ITEM 715001 - PERFORATED PIPE UNDERDRAINS, 6"
- (Q) ITEM 760504 - RUMBLE STRIPS, HOT-MIX
- (R) ITEM 602772 - MECHANICALLY STABILIZED EARTH WALLS
- (S) ITEM 602773 - PCC MASONRY FOR MECHANICALLY STABILIZED EARTH WALLS
- (T) ITEM ~~720512~~ (3) 720529 - PCC SAFETY BARRIER PERMANENT, SINGLE FACE
- (U) ITEM 720654 - PCC SAFETY BARRIER PERMANENT, SINGLE FACE, MODIFIED TYPE 1
- (V) ITEM 720587 - PCC SAFETY BARRIER PERMANENT, DOUBLE FACE, MODIFIED
- (W) ITEM 720655 - PCC SAFETY BARRIER PERMANENT, SINGLE FACE, MODIFIED TYPE 2
- (X) ITEM 712005 - RIPRAP, R-4
- (Y) ITEM 401665 - SUPERPAVE, TYPE C HOT-MIX, 160 GYRATIONS, PG 64-22, PATCHING
- (Z) ITEM 401666 - SUPERPAVE, TYPE B HOT-MIX, 160 GYRATIONS, PG 64-22, PATCHING
- (AA) ITEM 401667 - SUPERPAVE, BITUMINOUS CONCRETE BASE COURSE, 160 GYRATIONS, PG 64-22, PATCHING
- (BB) ITEM 302008 - GRADED AGGREGATE BASE COURSE, TYPE B, PATCHING
- (CC) ITEM 755000 - HOT-MIX, HOT LAID, BITUMINOUS CONCRETE CURB
- (DD) ITEM 701010 - PORTLAND CEMENT CONCRETE CURB, TYPE 1
- (EE) ITEM 701011 - PORTLAND CEMENT CONCRETE CURB, TYPE 2
- (FF) ITEM 701020 - INTEGRAL PORTLAND CEMENT CONCRETE CURB AND GUTTER, TYPE 1
- (GG) ITEM 701023 - INTEGRAL PORTLAND CEMENT CONCRETE CURB AND GUTTER, TYPE 4
- (HH) ITEM 701026 - PORTLAND CEMENT CONCRETE MONOLITHIC MEDIAN
- (II) ITEM 701027 - PORTLAND CEMENT CONCRETE CURB, TYPE 1 MODIFIED
- (JJ) ITEM 720658 - PCC SAFETY BARRIER PERMANENT SINGLE FACE, MODIFIED, TYPE 5
- (KK) ITEM 720050 - GALVANIZED STEEL BEAM GUARDRAIL, TYPE 1
- (LL) ITEM 760507 - PROFILE MILLING, HOT-MIX
- (MM) ITEM 720656 - PCC SAFETY BARRIER PERMANENT, SINGLE FACE, MODIFIED, TYPE 3
- (NN) ITEM 720657 - PCC SAFETY BARRIER PERMANENT, SINGLE FACE, MODIFIED, TYPE 4
- (OO) ITEM 720651 - PCC SAFETY BARRIER PERMANENT, DOUBLE FACE, BIFURCATED, TYPE 1
- (PP) ITEM 720652 - PCC SAFETY BARRIER PERMANENT, DOUBLE FACE, BIFURCATED, TYPE 2
- (RR) ITEM 401668 - SUPERPAVE, TYPE C HOT-MIX, 160 GYRATIONS, PG 64-22, WEDGE
- (SS) ITEM 401669 - SUPERPAVE, TYPE B HOT-MIX, 160 GYRATIONS, PG 64-22, WEDGE

PAVEMENT LIFT NOTE:

THE MAXIMUM LIFTS FOR THE INDIVIDUAL PAVING MATERIAL ARE AS FOLLOWS:
SUPERPAVE, TYPE C HOT-MIX - 2"
SUPERPAVE, TYPE B HOT-MIX - 3"
SUPERPAVE, BIT. CONC. BASE COURSE - 6"
GRADED AGGREGATE BASE COURSE - 8"

NOTES:

1) THE PGA IS APPLIED TO THE TOP OF THE FINAL PAVEMENT SURFACE.

UNOFFICIAL WEBSITE COPY

2/15/2011 1:34:32 PM
M:\PROJECTS\2003\03059_DELTRNPK\SRIMALL\CADD\2809003\PLANS\TS29_SR1.DGN

DELAWARE DEPARTMENT OF TRANSPORTATION	ADDENDUMS / REVISIONS	NOT TO SCALE	SR1 / I-95 INTERCHANGE	CONTRACT 28-090-03	BRIDGE NO.	TYPICAL SECTIONS	SHEET NO. 36
	ADDENDUM NO. (3) CHANGED ITEM NO., 02/18/2011, RLS			COUNTY NEW CASTLE	DESIGNED BY:		TOTAL SHTS. 803
					CHECKED BY:		

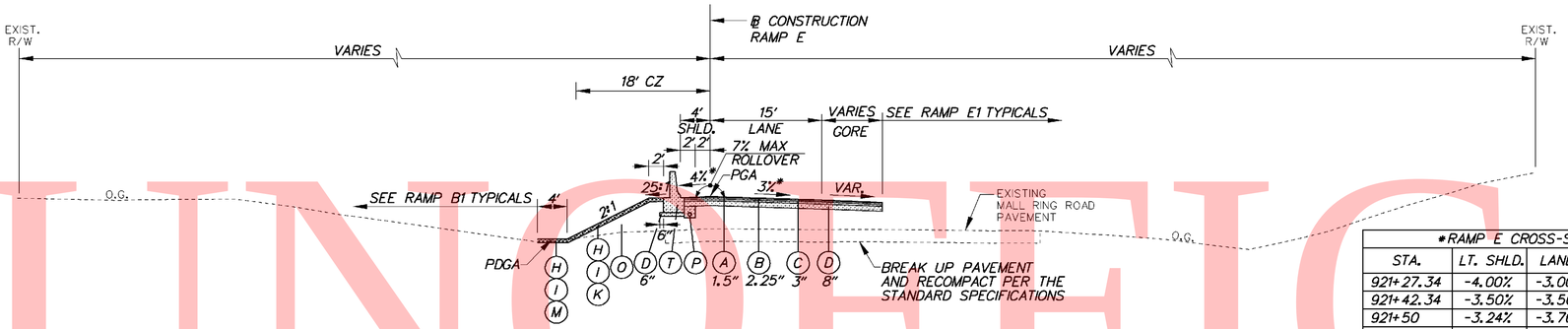

RAMP E

STA. 920+76.58 TO STA. 921+62.20

*RAMP E CROSS-SLOPES			
STA.	LT. SHLD.	LANES	RT. SHLD.
921+27.34	-4.00%	-3.00%	-
921+42.34	-3.50%	-3.50%	-
921+50	-3.24%	-3.76%	-
921+57.34	-3.00%	-4.00%	-

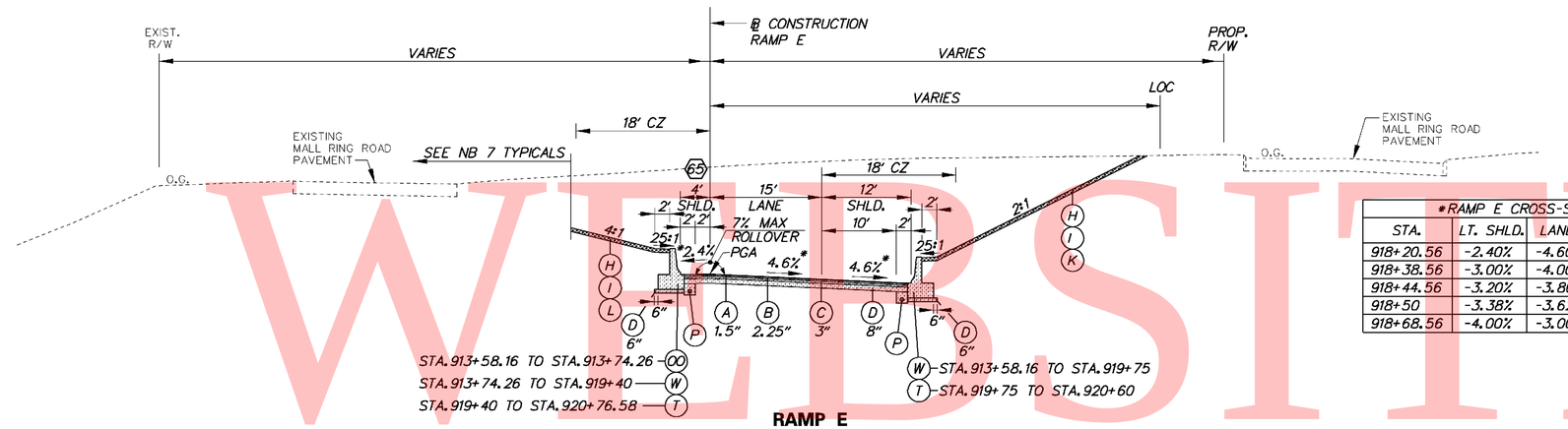

RAMP E

STA. 913+58.16 TO STA. 920+76.58

65 STA. 913+58.16 TO STA. 914+58.16
SHOULDER TAPERS 6' TO 4'

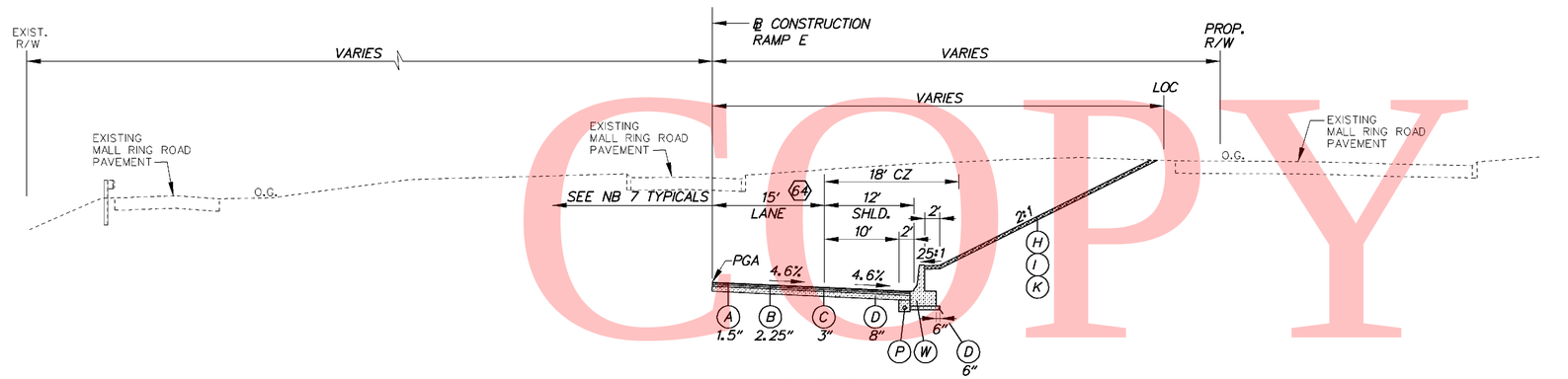

RAMP E

STA. 910+90.03 TO STA. 913+58.16

64 STA. 910+90.03 TO STA. 912+41.18
WIDTH TAPERS 12'TO 15'

*RAMP E CROSS-SLOPES			
STA.	LT. SHLD.	LANES	RT. SHLD.
918+20.56	-2.40%	-4.60%	-4.60%
918+38.56	-3.00%	-4.00%	-4.00%
918+44.56	-3.20%	-3.80%	-4.00%
918+50	-3.38%	-3.62%	-4.00%
918+68.56	-4.00%	-3.00%	-4.00%

LEGEND

- A ITEM 401708 - SUPERPAVE, TYPE C HOT-MIX, 160 GYRATIONS, PG 70-22 (NON-CARBONATE STONE)
- B ITEM 401654 - SUPERPAVE, TYPE B HOT-MIX, 160 GYRATIONS, PG 70-22
- C ITEM 401663 - SUPERPAVE, BITUMINOUS CONCRETE BASE COURSE, 160 GYRATIONS, PG 64-22
- D ITEM 302007 - GRADED AGGREGATE BASE COURSE, TYPE B
- E ITEM 401711 - SUPERPAVE, TYPE C HOT-MIX, 160 GYRATIONS, PG 76-22 (NON-CARBONATE STONE)
- F ITEM 401660 - SUPERPAVE, TYPE B HOT-MIX, 160 GYRATIONS, PG 76-22
- G ITEM 501006 - PORTLAND CEMENT CONCRETE PAVEMENT, 12"
- H ITEM 732002 - TOPSOIL, 6" DEPTH
- I ITEM 734013 - PERMANENT GRASS SEEDING, DRY GROUND
- J ITEM 602017 - PCC MASONRY, PARAPET, CLASS A
- K ITEM 735533 - SOIL RETENTION BLANKET MULCH, TYPE 3
- L ITEM 735534 - SOIL RETENTION BLANKET MULCH, TYPE 4
- M ITEM 735535 - SOIL RETENTION BLANKET MULCH, TYPE 5, UNLESS OTHERWISE NOTED, SEE DRAINAGE PLANS FOR LIMITS AND TYPE
- N ITEM 209001 - BORROW, TYPE A
- O ITEM 209006 - BORROW, TYPE F OR APPROVED PROJECT EXCAVATION
- P ITEM 715001 - PERFORATED PIPE UNDERDRAINS, 6"
- Q ITEM 760504 - RUMBLE STRIPS, HOT-MIX
- R ITEM 602772 - MECHANICALLY STABILIZED EARTH WALLS
- S ITEM 602773 - PCC MASONRY FOR MECHANICALLY STABILIZED EARTH WALLS
- T ITEM ~~720512~~ 3 720529 - PCC SAFETY BARRIER PERMANENT, SINGLE FACE
- U ITEM 720654 - PCC SAFETY BARRIER PERMANENT, SINGLE FACE, MODIFIED TYPE 1
- V ITEM 720587 - PCC SAFETY BARRIER PERMANENT, DOUBLE FACE, MODIFIED
- W ITEM 720655 - PCC SAFETY BARRIER PERMANENT, SINGLE FACE, MODIFIED TYPE 2
- X ITEM 712005 - RIPRAP, R-4
- Y ITEM 401665 - SUPERPAVE, TYPE C HOT-MIX, 160 GYRATIONS, PG 64-22, PATCHING
- Z ITEM 401666 - SUPERPAVE, TYPE B HOT-MIX, 160 GYRATIONS, PG 64-22, PATCHING
- AA ITEM 401667 - SUPERPAVE, BITUMINOUS CONCRETE BASE COURSE, 160 GYRATIONS, PG 64-22, PATCHING
- BB ITEM 302008 - GRADED AGGREGATE BASE COURSE, TYPE B, PATCHING
- CC ITEM 755000 - HOT-MIX, HOT LAID, BITUMINOUS CONCRETE CURB
- DD ITEM 701010 - PORTLAND CEMENT CONCRETE CURB, TYPE 1
- EE ITEM 701011 - PORTLAND CEMENT CONCRETE CURB, TYPE 2
- FF ITEM 701020 - INTEGRAL PORTLAND CEMENT CONCRETE CURB AND GUTTER, TYPE 1
- GG ITEM 701023 - INTEGRAL PORTLAND CEMENT CONCRETE CURB AND GUTTER, TYPE 4
- HH ITEM 701026 - PORTLAND CEMENT CONCRETE MONOLITHIC MEDIAN
- II ITEM 701027 - PORTLAND CEMENT CONCRETE CURB, TYPE 1 MODIFIED
- JJ ITEM 720658 - PCC SAFETY BARRIER PERMANENT SINGLE FACE, MODIFIED, TYPE 5
- KK ITEM 720050 - GALVANIZED STEEL BEAM GUARDRAIL, TYPE 1
- LL ITEM 760507 - PROFILE MILLING, HOT-MIX
- MM ITEM 720656 - PCC SAFETY BARRIER PERMANENT, SINGLE FACE, MODIFIED, TYPE 3
- NN ITEM 720657 - PCC SAFETY BARRIER PERMANENT, SINGLE FACE, MODIFIED, TYPE 4
- OO ITEM 720651 - PCC SAFETY BARRIER PERMANENT, DOUBLE FACE, BIFURCATED, TYPE 1
- PP ITEM 720652 - PCC SAFETY BARRIER PERMANENT, DOUBLE FACE, BIFURCATED, TYPE 2
- RR ITEM 401668 - SUPERPAVE, TYPE C HOT-MIX, 160 GYRATIONS, PG 64-22, WEDGE
- SS ITEM 401669 - SUPERPAVE, TYPE B HOT-MIX, 160 GYRATIONS, PG 64-22, WEDGE

PAVEMENT LIFT NOTE:

THE MAXIMUM LIFTS FOR THE INDIVIDUAL PAVING MATERIAL ARE AS FOLLOWS:
SUPERPAVE, TYPE C HOT-MIX - 2"
SUPERPAVE, TYPE B HOT-MIX - 3"
SUPERPAVE, BIT. CONC. BASE COURSE - 6"
GRADED AGGREGATE BASE COURSE - 8"

NOTES:

1) THE PGA IS APPLIED TO THE TOP OF THE FINAL PAVEMENT SURFACE.

UNOFFICIAL WEBSITE COPY

2/15/2011 11:40:41 PM
M:\PROJECTS\2003\03059_DELTRNPK\SR1MALL\CADD\2809003\PLANS\TS30_SR1.DGN

DELAWARE DEPARTMENT OF TRANSPORTATION

ADDENDUMS / REVISIONS	
ADDENDUM NO. 3 CHANGED ITEM NO.,	
02/18/2011, RLS	

NOT TO SCALE

SR1 / I-95 INTERCHANGE

CONTRACT	BRIDGE NO.	
28-090-03	DESIGNED BY:	
COUNTY	CHECKED BY:	
NEW CASTLE		

TYPICAL SECTIONS

SHEET NO.
37
TOTAL SHTS.
803

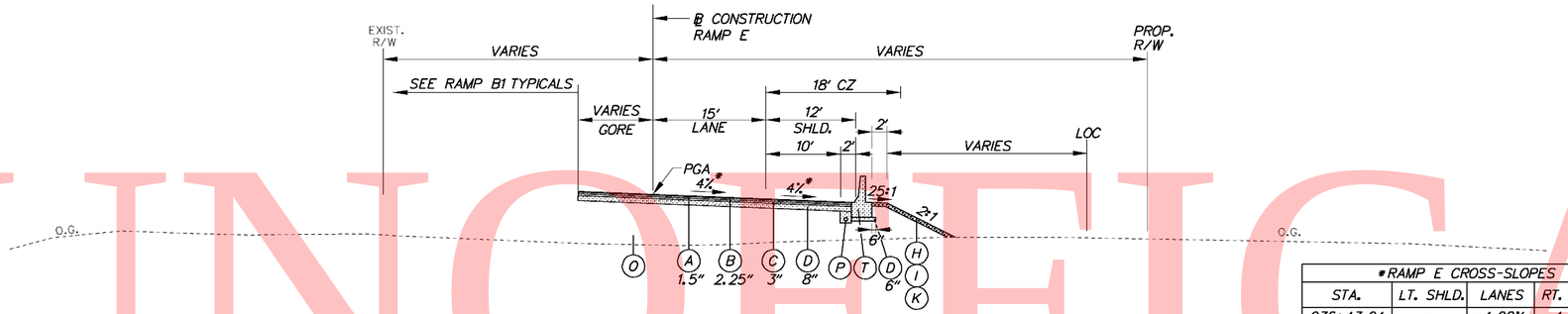

RAMP E

STA. 935+00.00 TO STA. 936+55.94

*RAMP E CROSS-SLOPES			
STA.	LT. SHLD.	LANES	RT. SHLD.
936+43.94	-	-4.00%	-4.00%
936+50	-	-4.20%	-4.20%
936+55.94	-	-4.40%	-4.40%

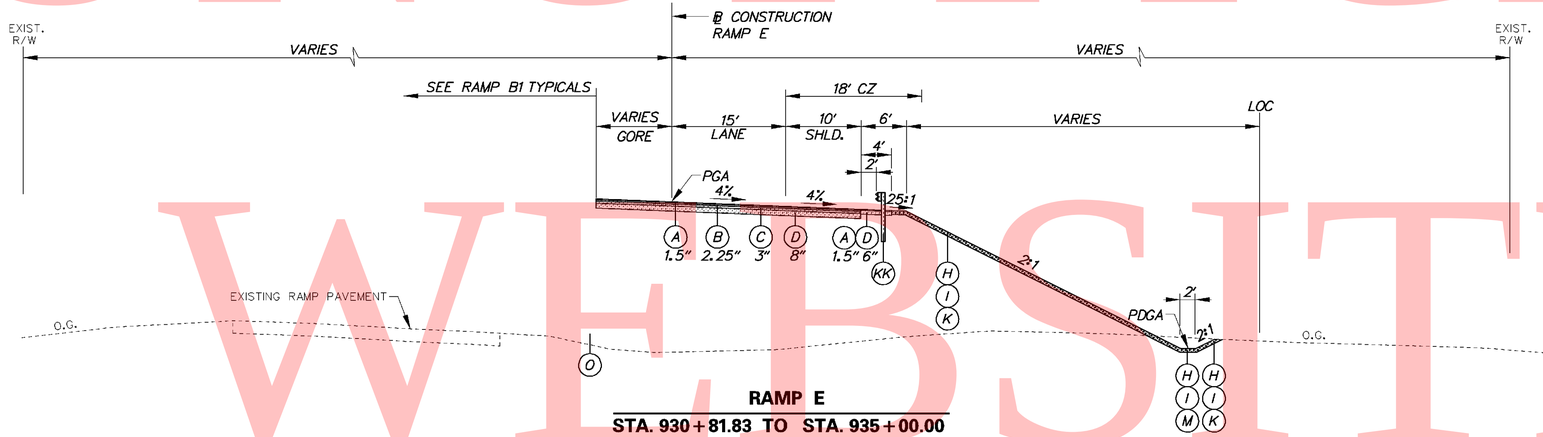

RAMP E

STA. 930+81.83 TO STA. 935+00.00

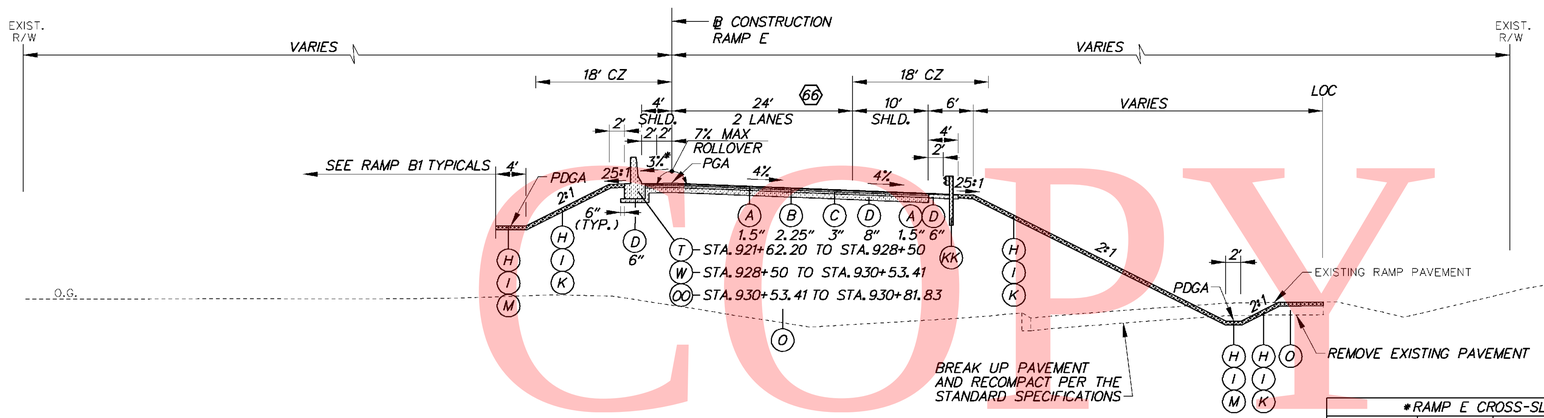

RAMP E

STA. 921+62.20 TO STA. 930+81.83

(66) STA. 921+62.20 TO STA. 924+62.20
WIDTH TAPERS 30' TO 24'

STA. 927+12.20 TO STA. 930+12.20
WIDTH TAPERS 24' TO 15'

*RAMP E CROSS-SLOPES			
STA.	LT. SHLD.	LANES	RT. SHLD.
930+30.77	-3.00%	-4.00%	-4.00%
930+50	-0.60%	-4.00%	-4.00%
930+54.77	0.00%	-4.00%	-4.00%
930+70.77	2.00%	-4.00%	-4.00%
930+81.89	3.40%	-4.00%	-4.00%

LEGEND

- (A) ITEM 401708 - SUPERPAVE, TYPE C HOT-MIX, 160 GYRATIONS, PG 70-22 (NON-CARBONATE STONE)
- (B) ITEM 401654 - SUPERPAVE, TYPE B HOT-MIX, 160 GYRATIONS, PG 70-22
- (C) ITEM 401663 - SUPERPAVE, BITUMINOUS CONCRETE BASE COURSE, 160 GYRATIONS, PG 64-22
- (D) ITEM 302007 - GRADED AGGREGATE BASE COURSE, TYPE B
- (E) ITEM 401711 - SUPERPAVE, TYPE C HOT-MIX, 160 GYRATIONS, PG 76-22 (NON-CARBONATE STONE)
- (F) ITEM 401660 - SUPERPAVE, TYPE B HOT-MIX, 160 GYRATIONS, PG 76-22
- (G) ITEM 501006 - PORTLAND CEMENT CONCRETE PAVEMENT, 12"
- (H) ITEM 732002 - TOPSOIL, 6" DEPTH
- (I) ITEM 734013 - PERMANENT GRASS SEEDING, DRY GROUND
- (J) ITEM 602017 - PCC MASONRY, PARAPET, CLASS A
- (K) ITEM 735533 - SOIL RETENTION BLANKET MULCH, TYPE 3
- (L) ITEM 735534 - SOIL RETENTION BLANKET MULCH, TYPE 4
- (M) ITEM 735535 - SOIL RETENTION BLANKET MULCH, TYPE 5, UNLESS OTHERWISE NOTED, SEE DRAINAGE PLANS FOR LIMITS AND TYPE
- (N) ITEM 209001 - BORROW, TYPE A
- (O) ITEM 209006 - BORROW, TYPE F OR APPROVED PROJECT EXCAVATION
- (P) ITEM 715001 - PERFORATED PIPE UNDERDRAINS, 6"
- (Q) ITEM 760504 - RUMBLE STRIPS, HOT-MIX
- (R) ITEM 602772 - MECHANICALLY STABILIZED EARTH WALLS
- (S) ITEM 602773 - PCC MASONRY FOR MECHANICALLY STABILIZED EARTH WALLS
- (T) ITEM ~~720512~~ 3 720529 - PCC SAFETY BARRIER PERMANENT, SINGLE FACE
- (U) ITEM 720654 - PCC SAFETY BARRIER PERMANENT, SINGLE FACE, MODIFIED TYPE 1
- (V) ITEM 720587 - PCC SAFETY BARRIER PERMANENT, DOUBLE FACE, MODIFIED
- (W) ITEM 720655 - PCC SAFETY BARRIER PERMANENT, SINGLE FACE, MODIFIED TYPE 2
- (X) ITEM 712005 - RIPRAP, R-4
- (Y) ITEM 401665 - SUPERPAVE, TYPE C HOT-MIX, 160 GYRATIONS, PG 64-22, PATCHING
- (Z) ITEM 401666 - SUPERPAVE, TYPE B HOT-MIX, 160 GYRATIONS, PG 64-22, PATCHING
- (AA) ITEM 401667 - SUPERPAVE, BITUMINOUS CONCRETE BASE COURSE, 160 GYRATIONS, PG 64-22, PATCHING
- (BB) ITEM 302008 - GRADED AGGREGATE BASE COURSE, TYPE B, PATCHING
- (CC) ITEM 755000 - HOT-MIX, HOT LAID, BITUMINOUS CONCRETE CURB
- (DD) ITEM 701010 - PORTLAND CEMENT CONCRETE CURB, TYPE 1
- (EE) ITEM 701011 - PORTLAND CEMENT CONCRETE CURB, TYPE 2
- (FF) ITEM 701020 - INTEGRAL PORTLAND CEMENT CONCRETE CURB AND GUTTER, TYPE 1
- (GG) ITEM 701023 - INTEGRAL PORTLAND CEMENT CONCRETE CURB AND GUTTER, TYPE 4
- (HH) ITEM 701026 - PORTLAND CEMENT CONCRETE MONOLITHIC MEDIAN
- (II) ITEM 701027 - PORTLAND CEMENT CONCRETE CURB, TYPE 1 MODIFIED
- (JJ) ITEM 720658 - PCC SAFETY BARRIER PERMANENT SINGLE FACE, MODIFIED, TYPE 5
- (KK) ITEM 720050 - GALVANIZED STEEL BEAM GUARDRAIL, TYPE 1
- (LL) ITEM 760507 - PROFILE MILLING, HOT-MIX
- (MM) ITEM 720656 - PCC SAFETY BARRIER PERMANENT, SINGLE FACE, MODIFIED, TYPE 3
- (NN) ITEM 720657 - PCC SAFETY BARRIER PERMANENT, SINGLE FACE, MODIFIED, TYPE 4
- (OO) ITEM 720651 - PCC SAFETY BARRIER PERMANENT, DOUBLE FACE, BIFURCATED, TYPE 1
- (PP) ITEM 720652 - PCC SAFETY BARRIER PERMANENT, DOUBLE FACE, BIFURCATED, TYPE 2
- (RR) ITEM 401668 - SUPERPAVE, TYPE C HOT-MIX, 160 GYRATIONS, PG 64-22, WEDGE
- (SS) ITEM 401669 - SUPERPAVE, TYPE B HOT-MIX, 160 GYRATIONS, PG 64-22, WEDGE

PAVEMENT LIFT NOTE:

THE MAXIMUM LIFTS FOR THE INDIVIDUAL PAVING MATERIAL ARE AS FOLLOWS:
SUPERPAVE, TYPE C HOT-MIX - 2"
SUPERPAVE, TYPE B HOT-MIX - 3"
SUPERPAVE, BIT. CONC. BASE COURSE - 6"
GRADED AGGREGATE BASE COURSE - 8"

NOTES:

1) THE PGA IS APPLIED TO THE TOP OF THE FINAL PAVEMENT SURFACE.

UNOFFICIAL WEBSITE COPY

DELAWARE DEPARTMENT OF TRANSPORTATION	ADDENDUMS / REVISIONS	NOT TO SCALE	SR1 / I-95 INTERCHANGE	CONTRACT 28-090-03	BRIDGE NO.	TYPICAL SECTIONS	SHEET NO. 38
	ADDENDUM NO. 3 CHANGED ITEM NO., 02/18/2011, RLS			COUNTY NEW CASTLE	DESIGNED BY:		TOTAL SHTS. 803
					CHECKED BY:		

2/15/2011 11:42:06 PM
M:\PROJECTS\2003\03059_DELTRNPK\SRIMALL\CADD\2809003\PLANS\TS31_SR1.DGN

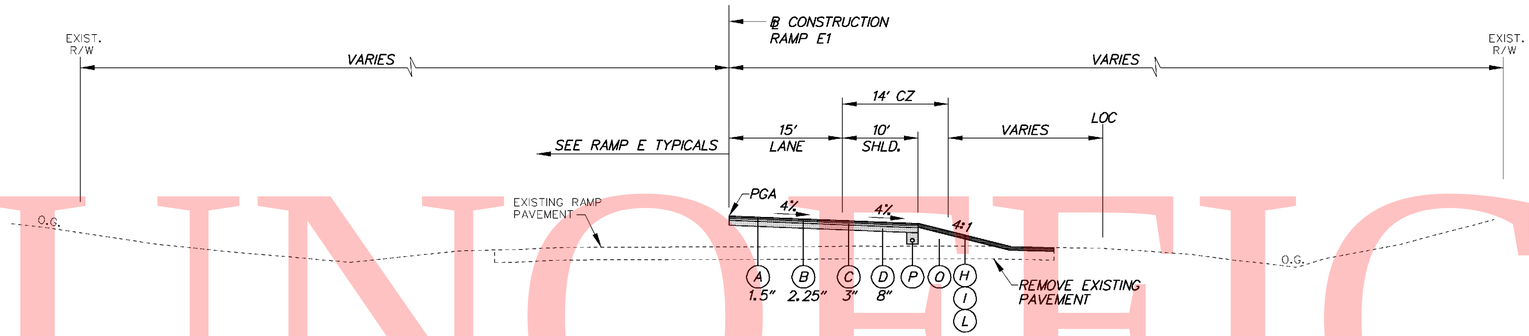

RAMP E1

STA. 1011+64.66 TO STA. 1012+51.50

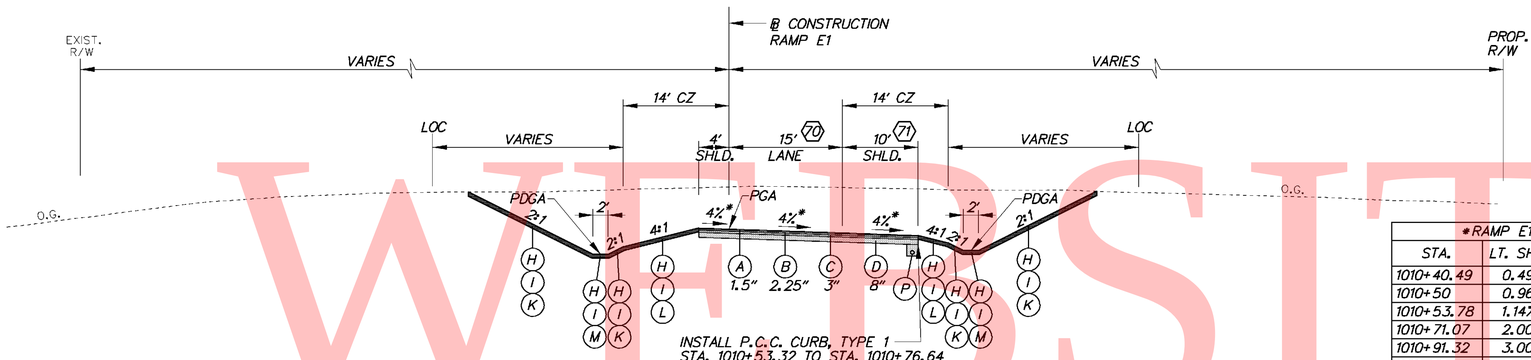

INSTALL P.C.C. CURB, TYPE 1
STA. 1010+53.32 TO STA. 1010+76.64

RAMP E1

STA. 1010+53.32 TO STA. 1011+64.66

70 STA. 1010+53.32 TO STA. 1010+74.02
WIDTH TAPERS 21.32' TO 15'

71 STA. 1010+53.32 TO STA. 1010+76.64
SHOULDER TAPERS 10.56' TO 10'

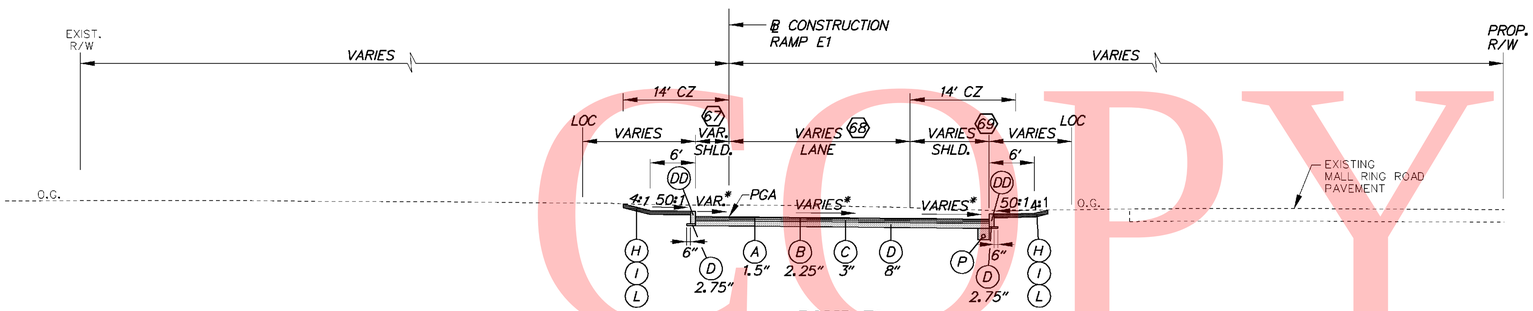

RAMP E1

STA. 1010+45.48 TO STA. 1010+53.32

67 STA. 1010+45.48 TO STA. 1010+53.32
SHOULDER TAPERS 3.98' TO 4'

68 STA. 1010+45.48 TO STA. 1010+53.32
WIDTH TAPERS 30.16' TO 21.32'

69 STA. 1010+45.48 TO STA. 1010+53.32
SHOULDER TAPERS 9.93' TO 10.56'

*RAMP E1 CROSS-SLOPES			
STA.	LT. SHLD.	LANES	RT. SHLD.
1010+40.49	0.49%	-0.49%	-0.49%
1010+50	0.96%	-0.96%	-0.96%
1010+53.78	1.14%	-1.14%	-1.14%
1010+71.07	2.00%	-2.00%	-2.00%
1010+91.32	3.00%	-3.00%	-3.00%
1011+00	3.43%	-3.43%	-3.43%
1011+11.58	4.00%	-4.00%	-4.00%

LEGEND

- (A) ITEM 401708 - SUPERPAVE, TYPE C HOT-MIX, 160 GYRATIONS, PG 70-22 (NON-CARBONATE STONE)
- (B) ITEM 401654 - SUPERPAVE, TYPE B HOT-MIX, 160 GYRATIONS, PG 70-22
- (C) ITEM 401663 - SUPERPAVE, BITUMINOUS CONCRETE BASE COURSE, 160 GYRATIONS, PG 64-22
- (D) ITEM 302007 - GRADED AGGREGATE BASE COURSE, TYPE B
- (E) ITEM 401711 - SUPERPAVE, TYPE C HOT-MIX, 160 GYRATIONS, PG 76-22 (NON-CARBONATE STONE)
- (F) ITEM 401660 - SUPERPAVE, TYPE B HOT-MIX, 160 GYRATIONS, PG 76-22
- (G) ITEM 501006 - PORTLAND CEMENT CONCRETE PAVEMENT, 12"
- (H) ITEM 732002 - TOPSOIL, 6" DEPTH
- (I) ITEM 734013 - PERMANENT GRASS SEEDING, DRY GROUND
- (J) ITEM 602017 - PCC MASONRY, PARAPET, CLASS A
- (K) ITEM 735533 - SOIL RETENTION BLANKET MULCH, TYPE 3
- (L) ITEM 735534 - SOIL RETENTION BLANKET MULCH, TYPE 4
- (M) ITEM 735535 - SOIL RETENTION BLANKET MULCH, TYPE 5, UNLESS OTHERWISE NOTED, SEE DRAINAGE PLANS FOR LIMITS AND TYPE
- (N) ITEM 209001 - BORROW, TYPE A
- (O) ITEM 209006 - BORROW, TYPE F OR APPROVED PROJECT EXCAVATION
- (P) ITEM 715001 - PERFORATED PIPE UNDERDRAINS, 6"
- (Q) ITEM 760504 - RUMBLE STRIPS, HOT-MIX
- (R) ITEM 602772 - MECHANICALLY STABILIZED EARTH WALLS
- (S) ITEM 602773 - PCC MASONRY FOR MECHANICALLY STABILIZED EARTH WALLS
- (T) ITEM ~~720512~~ 3 720529 - PCC SAFETY BARRIER PERMANENT, SINGLE FACE
- (U) ITEM 720654 - PCC SAFETY BARRIER PERMANENT, SINGLE FACE, MODIFIED TYPE 1
- (V) ITEM 720587 - PCC SAFETY BARRIER PERMANENT, DOUBLE FACE, MODIFIED
- (W) ITEM 720655 - PCC SAFETY BARRIER PERMANENT, SINGLE FACE, MODIFIED TYPE 2
- (X) ITEM 712005 - RIPRAP, R-4
- (Y) ITEM 401665 - SUPERPAVE, TYPE C HOT-MIX, 160 GYRATIONS, PG 64-22, PATCHING
- (Z) ITEM 401666 - SUPERPAVE, TYPE B HOT-MIX, 160 GYRATIONS, PG 64-22, PATCHING
- (AA) ITEM 401667 - SUPERPAVE, BITUMINOUS CONCRETE BASE COURSE, 160 GYRATIONS, PG 64-22, PATCHING
- (BB) ITEM 302008 - GRADED AGGREGATE BASE COURSE, TYPE B, PATCHING
- (CC) ITEM 755000 - HOT-MIX, HOT LAID, BITUMINOUS CONCRETE CURB
- (DD) ITEM 701010 - PORTLAND CEMENT CONCRETE CURB, TYPE 1
- (EE) ITEM 701011 - PORTLAND CEMENT CONCRETE CURB, TYPE 2
- (FF) ITEM 701020 - INTEGRAL PORTLAND CEMENT CONCRETE CURB AND GUTTER, TYPE 1
- (GG) ITEM 701023 - INTEGRAL PORTLAND CEMENT CONCRETE CURB AND GUTTER, TYPE 4
- (HH) ITEM 701026 - PORTLAND CEMENT CONCRETE MONOLITHIC MEDIAN
- (II) ITEM 701027 - PORTLAND CEMENT CONCRETE CURB, TYPE 1 MODIFIED
- (JJ) ITEM 720658 - PCC SAFETY BARRIER PERMANENT SINGLE FACE, MODIFIED, TYPE 5
- (KK) ITEM 720050 - GALVANIZED STEEL BEAM GUARDRAIL, TYPE 1
- (LL) ITEM 760507 - PROFILE MILLING, HOT-MIX
- (MM) ITEM 720656 - PCC SAFETY BARRIER PERMANENT, SINGLE FACE, MODIFIED, TYPE 3
- (NN) ITEM 720657 - PCC SAFETY BARRIER PERMANENT, SINGLE FACE, MODIFIED, TYPE 4
- (OO) ITEM 720651 - PCC SAFETY BARRIER PERMANENT, DOUBLE FACE, BIFURCATED, TYPE 1
- (PP) ITEM 720652 - PCC SAFETY BARRIER PERMANENT, DOUBLE FACE, BIFURCATED, TYPE 2
- (RR) ITEM 401668 - SUPERPAVE, TYPE C HOT-MIX, 160 GYRATIONS, PG 64-22, WEDGE
- (SS) ITEM 401669 - SUPERPAVE, TYPE B HOT-MIX, 160 GYRATIONS, PG 64-22, WEDGE

PAVEMENT LIFT NOTE:

THE MAXIMUM LIFTS FOR THE INDIVIDUAL PAVING MATERIAL ARE AS FOLLOWS:
SUPERPAVE, TYPE C HOT-MIX - 2"
SUPERPAVE, TYPE B HOT-MIX - 3"
SUPERPAVE, BIT. CONC. BASE COURSE - 6"
GRADED AGGREGATE BASE COURSE - 8"

NOTES:

1) THE PGA IS APPLIED TO THE TOP OF THE FINAL PAVEMENT SURFACE.

UNOFFICIAL WEBSITE COPY

DELAWARE DEPARTMENT OF TRANSPORTATION	ADDENDUMS / REVISIONS	NOT TO SCALE	SR1 / I-95 INTERCHANGE	CONTRACT 28-090-03	BRIDGE NO.	TYPICAL SECTIONS	SHEET NO. 39
	ADDENDUM NO. 3 CHANGED ITEM NO., 02/18/2011, RLS			COUNTY NEW CASTLE	DESIGNED BY:		TOTAL SHTS. 803
					CHECKED BY:		

2/15/2011 11:43:14 PM
M:\PROJECTS\2003\03059_DELTRNPK\SRIMALL\CADD\2809003\PLANS\TS32_SR1.DGN

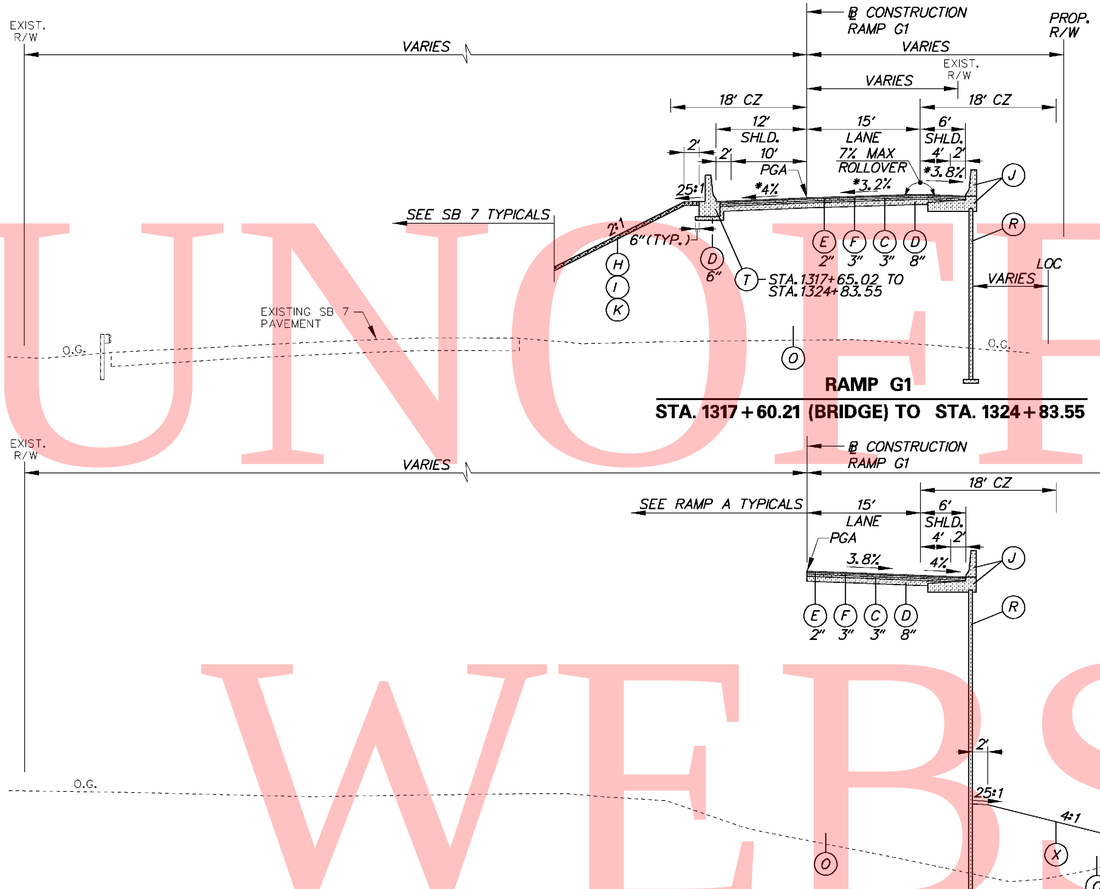

RAMP G1

STA. 1317+60.21 (BRIDGE) TO STA. 1324+83.55

*RAMP G1 CROSS-SLOPES			
STA.	LT. SHLD.	LANES	RT. SHLD.
1317+50.80	-6.00%	6.00%	6.00%
1317+92.80	-4.60%	4.60%	3.20%
1318+00	-4.36%	4.36%	2.72%
1318+10.80	-4.00%	4.00%	2.00%
1318+34.80	-4.00%	3.20%	0.40%
1318+40.80	-4.00%	3.20%	0.00%
1318+50	-4.00%	3.20%	-0.61%
1318+97.80	-4.00%	3.20%	-3.80%
1324+51.55	-4.00%	3.20%	-3.80%
1324+57.55	-4.00%	3.00%	-4.00%
1324+83.55	-4.00%	2.13%	-4.00%

RAMP G1

STA. 1310+64.89 TO STA. 1311+30.11 (BRIDGE)

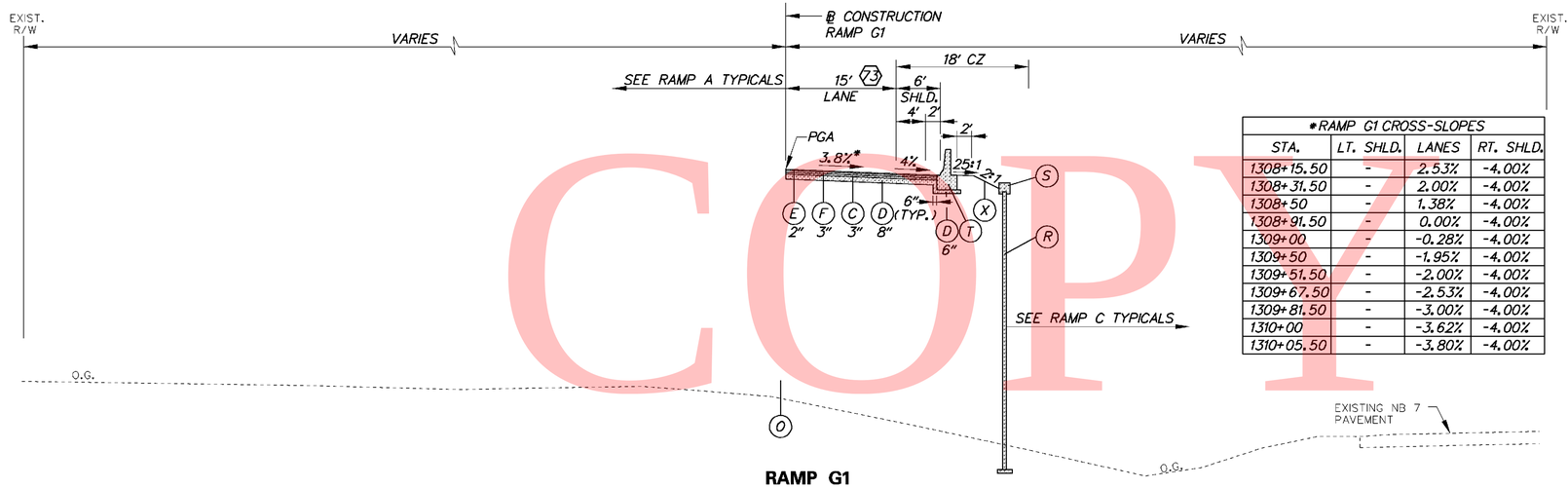

RAMP G1

STA. 1308+15.50 TO STA. 1310+64.89

73 STA. 1308+15.50 TO STA. 1309+67.49
WIDTH TAPERS 12' TO 15'

*RAMP G1 CROSS-SLOPES			
STA.	LT. SHLD.	LANES	RT. SHLD.
1308+15.50	-	2.53%	-4.00%
1308+31.50	-	2.00%	-4.00%
1308+50	-	1.38%	-4.00%
1308+91.50	-	0.00%	-4.00%
1309+00	-	-0.28%	-4.00%
1309+50	-	-1.95%	-4.00%
1309+51.50	-	-2.00%	-4.00%
1309+67.50	-	-2.53%	-4.00%
1309+81.50	-	-3.00%	-4.00%
1310+00	-	-3.62%	-4.00%
1310+05.50	-	-3.80%	-4.00%

LEGEND

- (A) ITEM 401708 - SUPERPAVE, TYPE C HOT-MIX, 160 GYRATIONS, PG 70-22 (NON-CARBONATE STONE)
- (B) ITEM 401654 - SUPERPAVE, TYPE B HOT-MIX, 160 GYRATIONS, PG 70-22
- (C) ITEM 401663 - SUPERPAVE, BITUMINOUS CONCRETE BASE COURSE, 160 GYRATIONS, PG 64-22
- (D) ITEM 302007 - GRADED AGGREGATE BASE COURSE, TYPE B
- (E) ITEM 401711 - SUPERPAVE, TYPE C HOT-MIX, 160 GYRATIONS, PG 76-22 (NON-CARBONATE STONE)
- (F) ITEM 401660 - SUPERPAVE, TYPE B HOT-MIX, 160 GYRATIONS, PG 76-22
- (G) ITEM 501006 - PORTLAND CEMENT CONCRETE PAVEMENT, 12"
- (H) ITEM 732002 - TOPSOIL, 6" DEPTH
- (I) ITEM 734013 - PERMANENT GRASS SEEDING, DRY GROUND
- (J) ITEM 602017 - PCC MASONRY, PARAPET, CLASS A
- (K) ITEM 735533 - SOIL RETENTION BLANKET MULCH, TYPE 3
- (L) ITEM 735534 - SOIL RETENTION BLANKET MULCH, TYPE 4
- (M) ITEM 735535 - SOIL RETENTION BLANKET MULCH, TYPE 5, UNLESS OTHERWISE NOTED, SEE DRAINAGE PLANS FOR LIMITS AND TYPE
- (N) ITEM 209001 - BORROW, TYPE A
- (O) ITEM 209006 - BORROW, TYPE F OR APPROVED PROJECT EXCAVATION
- (P) ITEM 715001 - PERFORATED PIPE UNDERDRAINS, 6"
- (Q) ITEM 760504 - RUMBLE STRIPS, HOT-MIX
- (R) ITEM 602772 - MECHANICALLY STABILIZED EARTH WALLS
- (S) ITEM 602773 - PCC MASONRY FOR MECHANICALLY STABILIZED EARTH WALLS
- (T) ITEM ~~720512~~ 3 720529 - PCC SAFETY BARRIER PERMANENT, SINGLE FACE
- (U) ITEM 720654 - PCC SAFETY BARRIER PERMANENT, SINGLE FACE, MODIFIED TYPE 1
- (V) ITEM 720587 - PCC SAFETY BARRIER PERMANENT, DOUBLE FACE, MODIFIED
- (W) ITEM 720655 - PCC SAFETY BARRIER PERMANENT, SINGLE FACE, MODIFIED TYPE 2
- (X) ITEM 712005 - RIPRAP, R-4
- (Y) ITEM 401665 - SUPERPAVE, TYPE C HOT-MIX, 160 GYRATIONS, PG 64-22, PATCHING
- (Z) ITEM 401666 - SUPERPAVE, TYPE B HOT-MIX, 160 GYRATIONS, PG 64-22, PATCHING
- (AA) ITEM 401667 - SUPERPAVE, BITUMINOUS CONCRETE BASE COURSE, 160 GYRATIONS, PG 64-22, PATCHING
- (BB) ITEM 302008 - GRADED AGGREGATE BASE COURSE, TYPE B, PATCHING
- (CC) ITEM 755000 - HOT-MIX, HOT LAID, BITUMINOUS CONCRETE CURB
- (DD) ITEM 701010 - PORTLAND CEMENT CONCRETE CURB, TYPE 1
- (EE) ITEM 701011 - PORTLAND CEMENT CONCRETE CURB, TYPE 2
- (FF) ITEM 701020 - INTEGRAL PORTLAND CEMENT CONCRETE CURB AND GUTTER, TYPE 1
- (GG) ITEM 701023 - INTEGRAL PORTLAND CEMENT CONCRETE CURB AND GUTTER, TYPE 4
- (HH) ITEM 701026 - PORTLAND CEMENT CONCRETE MONOLITHIC MEDIAN
- (II) ITEM 701027 - PORTLAND CEMENT CONCRETE CURB, TYPE 1 MODIFIED
- (JJ) ITEM 720658 - PCC SAFETY BARRIER PERMANENT SINGLE FACE, MODIFIED, TYPE 5
- (KK) ITEM 720050 - GALVANIZED STEEL BEAM GUARDRAIL, TYPE 1
- (LL) ITEM 760507 - PROFILE MILLING, HOT-MIX
- (MM) ITEM 720656 - PCC SAFETY BARRIER PERMANENT, SINGLE FACE, MODIFIED, TYPE 3
- (NN) ITEM 720657 - PCC SAFETY BARRIER PERMANENT, SINGLE FACE, MODIFIED, TYPE 4
- (OO) ITEM 720651 - PCC SAFETY BARRIER PERMANENT, DOUBLE FACE, BIFURCATED, TYPE 1
- (PP) ITEM 720652 - PCC SAFETY BARRIER PERMANENT, DOUBLE FACE, BIFURCATED, TYPE 2
- (RR) ITEM 401668 - SUPERPAVE, TYPE C HOT-MIX, 160 GYRATIONS, PG 64-22, WEDGE
- (SS) ITEM 401669 - SUPERPAVE, TYPE B HOT-MIX, 160 GYRATIONS, PG 64-22, WEDGE

PAVEMENT LIFT NOTE:

THE MAXIMUM LIFTS FOR THE INDIVIDUAL PAVING MATERIAL ARE AS FOLLOWS:
SUPERPAVE, TYPE C HOT-MIX - 2"
SUPERPAVE, TYPE B HOT-MIX - 3"
SUPERPAVE, BIT. CONC. BASE COURSE - 6"
GRADED AGGREGATE BASE COURSE - 8"

NOTES:

1) THE PGA IS APPLIED TO THE TOP OF THE FINAL PAVEMENT SURFACE.

UNOFFICIAL WEBSITE COPY

2/15/2011 11:44:17 PM
M:\PROJECTS\2003\03059_DELTRNPK\SRTMALL\CADD\2809003\PLANS\TS33_SR1.DGN

DELAWARE DEPARTMENT OF TRANSPORTATION	ADDENDUMS / REVISIONS	NOT TO SCALE	SR1 / I-95 INTERCHANGE	CONTRACT 28-090-03	BRIDGE NO.	TYPICAL SECTIONS	SHEET NO. 40
	ADDENDUM NO. 3 CHANGED ITEM NO., 02/18/2011, RLS			COUNTY NEW CASTLE	DESIGNED BY:		TOTAL SHTS. 803
					CHECKED BY:		

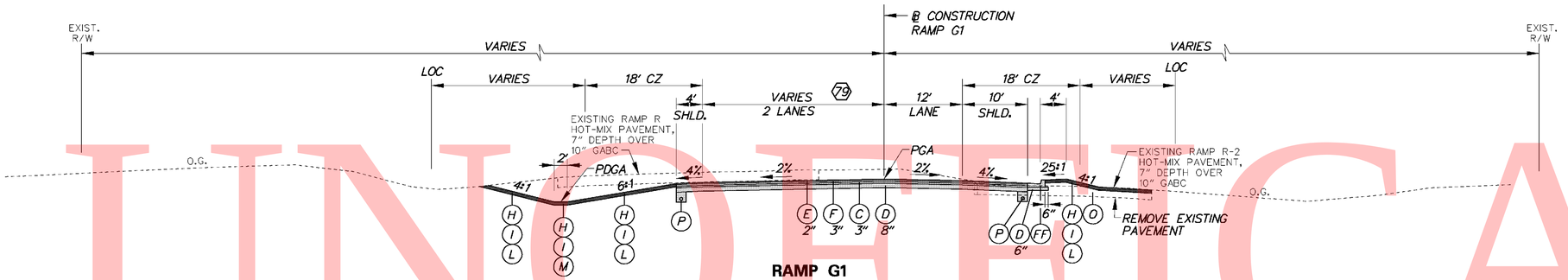

RAMP G1

STA. 1330+75.00 TO STA. 1331+75.12

(79) STA.1330+75.00 TO STA.1331+75.12
WIDTH TAPERS 25.57' TO 28'

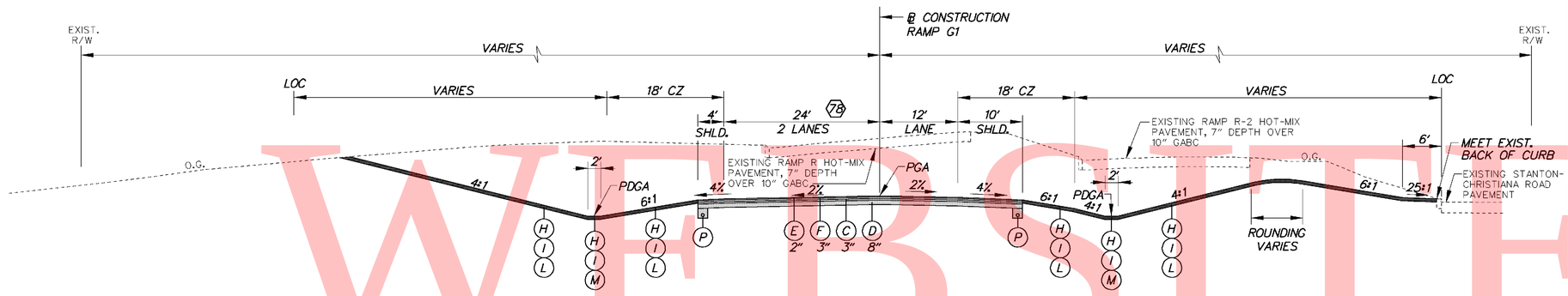

RAMP G1

STA. 1327+10.00 TO STA. 1330+75.00

(78) STA.1329+96.28 TO STA.1330+75.00
WIDTH TAPERS 24' TO 25.57'

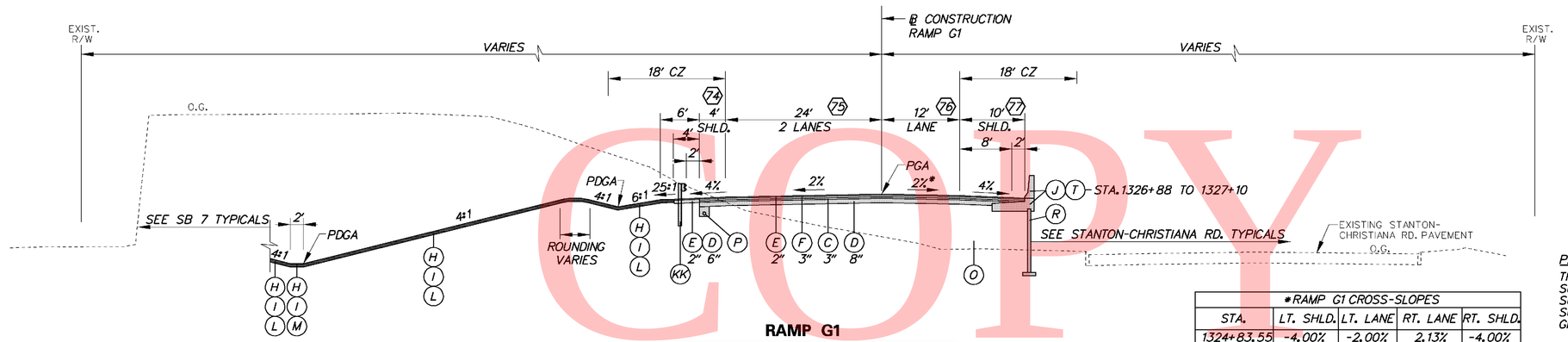

RAMP G1

STA. 1324+83.55 TO STA. 1327+10.00

(74) STA.1325+00.00 TO STA.1325+50.00
SHOULDER TAPERS 12' TO 4'

(75) STA.1325+00.00 TO STA.1326+50.00
WIDTH TAPERS 0' TO 24'

(76) STA.1325+00.00 TO STA.1326+50.00
WIDTH TAPERS 15' TO 12'

(77) STA.1325+00.00 TO STA.1326+50.00
SHOULDER TAPERS 6' TO 10'

*RAMP G1 CROSS-SLOPES				
STA.	LT. SHLD.	LT. LANE	RT. LANE	RT. SHLD.
1324+83.55	-4.00%	-2.00%	2.13%	-4.00%
1325+00	-4.00%	-2.00%	1.59%	-4.00%
1325+47.55	-4.00%	-2.00%	0.00%	-4.00%
1325+50	-4.00%	-2.00%	-0.08%	-4.00%
1326+00	-4.00%	-2.00%	-1.75%	-4.00%
1326+07.55	-4.00%	-2.00%	-2.00%	-4.00%

LEGEND

(A) ITEM 401708 - SUPERPAVE, TYPE C HOT-MIX, 160 GYRATIONS, PG 70-22 (NON-CARBONATE STONE)
(B) ITEM 401654 - SUPERPAVE, TYPE B HOT-MIX, 160 GYRATIONS, PG 70-22
(C) ITEM 401663 - SUPERPAVE, BITUMINOUS CONCRETE BASE COURSE, 160 GYRATIONS, PG 64-22
(D) ITEM 302007 - GRADED AGGREGATE BASE COURSE, TYPE B
(E) ITEM 401711 - SUPERPAVE, TYPE C HOT-MIX, 160 GYRATIONS, PG 76-22 (NON-CARBONATE STONE)
(F) ITEM 401660 - SUPERPAVE, TYPE B HOT-MIX, 160 GYRATIONS, PG 76-22
(G) ITEM 501006 - PORTLAND CEMENT CONCRETE PAVEMENT, 12"
(H) ITEM 732002 - TOPSOIL, 6" DEPTH
(I) ITEM 734013 - PERMANENT GRASS SEEDING, DRY GROUND
(J) ITEM 602017 - PCC MASONRY, PARAPET, CLASS A
(K) ITEM 735533 - SOIL RETENTION BLANKET MULCH, TYPE 3
(L) ITEM 735534 - SOIL RETENTION BLANKET MULCH, TYPE 4
(M) ITEM 735535 - SOIL RETENTION BLANKET MULCH, TYPE 5, UNLESS OTHERWISE NOTED, SEE DRAINAGE PLANS FOR LIMITS AND TYPE
(N) ITEM 209001 - BORROW, TYPE A
(O) ITEM 209006 - BORROW, TYPE F OR APPROVED PROJECT EXCAVATION
(P) ITEM 715001 - PERFORATED PIPE UNDERDRAINS, 6"
(Q) ITEM 760504 - RUMBLE STRIPS, HOT-MIX
(R) ITEM 602772 - MECHANICALLY STABILIZED EARTH WALLS
(S) ITEM 602773 - PCC MASONRY FOR MECHANICALLY STABILIZED EARTH WALLS
(T) ITEM ~~720512~~ 720529 - PCC SAFETY BARRIER PERMANENT, SINGLE FACE
(U) ITEM 720654 - PCC SAFETY BARRIER PERMANENT, SINGLE FACE, MODIFIED TYPE 1
(V) ITEM 720587 - PCC SAFETY BARRIER PERMANENT, DOUBLE FACE, MODIFIED
(W) ITEM 720655 - PCC SAFETY BARRIER PERMANENT, SINGLE FACE, MODIFIED TYPE 2
(X) ITEM 712005 - RIPRAP, R-4
(Y) ITEM 401665 - SUPERPAVE, TYPE C HOT-MIX, 160 GYRATIONS, PG 64-22, PATCHING
(Z) ITEM 401666 - SUPERPAVE, TYPE B HOT-MIX, 160 GYRATIONS, PG 64-22, PATCHING
(AA) ITEM 401667 - SUPERPAVE, BITUMINOUS CONCRETE BASE COURSE, 160 GYRATIONS, PG 64-22, PATCHING
(BB) ITEM 302008 - GRADED AGGREGATE BASE COURSE, TYPE B, PATCHING
(CC) ITEM 755000 - HOT-MIX, HOT LAID, BITUMINOUS CONCRETE CURB
(DD) ITEM 701010 - PORTLAND CEMENT CONCRETE CURB, TYPE 1
(EE) ITEM 701011 - PORTLAND CEMENT CONCRETE CURB, TYPE 2
(FF) ITEM 701020 - INTEGRAL PORTLAND CEMENT CONCRETE CURB AND GUTTER, TYPE 1
(GG) ITEM 701023 - INTEGRAL PORTLAND CEMENT CONCRETE CURB AND GUTTER, TYPE 4
(HH) ITEM 701026 - PORTLAND CEMENT CONCRETE MONOLITHIC MEDIAN
(II) ITEM 701027 - PORTLAND CEMENT CONCRETE CURB, TYPE 1 MODIFIED
(JJ) ITEM 720658 - PCC SAFETY BARRIER PERMANENT SINGLE FACE, MODIFIED, TYPE 5
(KK) ITEM 720050 - GALVANIZED STEEL BEAM GUARDRAIL, TYPE 1
(LL) ITEM 760507 - PROFILE MILLING, HOT-MIX
(MM) ITEM 720656 - PCC SAFETY BARRIER PERMANENT, SINGLE FACE, MODIFIED, TYPE 3
(NN) ITEM 720657 - PCC SAFETY BARRIER PERMANENT, SINGLE FACE, MODIFIED, TYPE 4
(OO) ITEM 720651 - PCC SAFETY BARRIER PERMANENT, DOUBLE FACE, BIFURCATED, TYPE 1
(PP) ITEM 720652 - PCC SAFETY BARRIER PERMANENT, DOUBLE FACE, BIFURCATED, TYPE 2
(RR) ITEM 401668 - SUPERPAVE, TYPE C HOT-MIX, 160 GYRATIONS, PG 64-22, WEDGE
(SS) ITEM 401669 - SUPERPAVE, TYPE B HOT-MIX, 160 GYRATIONS, PG 64-22, WEDGE

PAVEMENT LIFT NOTE:

THE MAXIMUM LIFTS FOR THE INDIVIDUAL PAVING MATERIAL ARE AS FOLLOWS:
SUPERPAVE, TYPE C HOT-MIX - 2"
SUPERPAVE, TYPE B HOT-MIX - 3"
SUPERPAVE, BIT. CONC. BASE COURSE - 6"
GRADED AGGREGATE BASE COURSE - 8"

NOTES:

1) THE PGA IS APPLIED TO THE TOP OF THE FINAL PAVEMENT SURFACE.

UNOFFICIAL WEBSITE COPY

2/15/2011 1:45:43 PM
M:\PROJECTS\2003\03059_DELTRNPK\SRIMALL\CADD\2809003\PLANS\TS34_SR1.DGN

DELAWARE DEPARTMENT OF TRANSPORTATION	ADDENDUMS / REVISIONS	NOT TO SCALE	SR1 / I-95 INTERCHANGE	CONTRACT 28-090-03	BRIDGE NO.	TYPICAL SECTIONS	SHEET NO. 41
	ADDENDUM NO. 3 CHANGED ITEM NO., 02/18/2011, RLS			COUNTY NEW CASTLE	DESIGNED BY:		TOTAL SHTS. 803
					CHECKED BY:		

UNOFFICIAL WEBSITE COPY

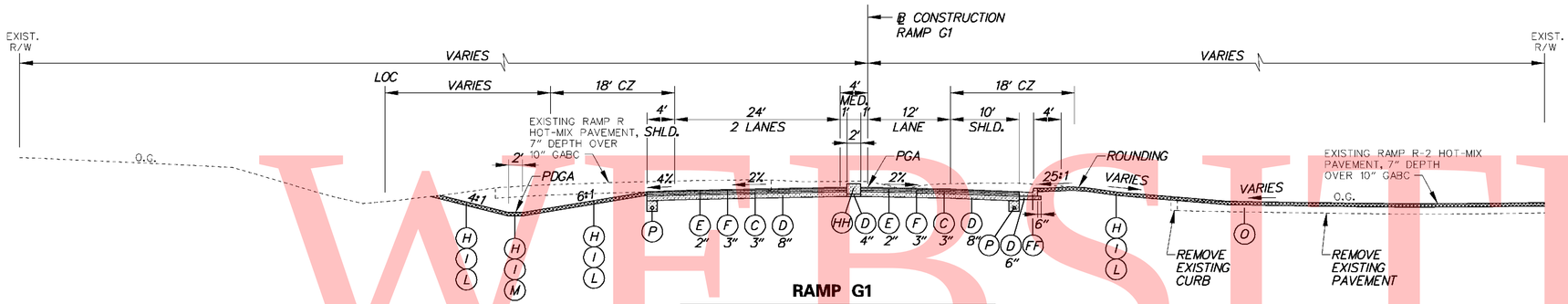

RAMP G1

STA. 1331+75.12 TO STA. 1332+40.00

LEGEND

- (A) ITEM 401708 - SUPERPAVE, TYPE C HOT-MIX, 160 GYRATIONS, PG 70-22 (NON-CARBONATE STONE)
- (B) ITEM 401654 - SUPERPAVE, TYPE B HOT-MIX, 160 GYRATIONS, PG 70-22
- (C) ITEM 401663 - SUPERPAVE, BITUMINOUS CONCRETE BASE COURSE, 160 GYRATIONS, PG 64-22
- (D) ITEM 302007 - GRADED AGGREGATE BASE COURSE, TYPE B
- (E) ITEM 401711 - SUPERPAVE, TYPE C HOT-MIX, 160 GYRATIONS, PG 76-22 (NON-CARBONATE STONE)
- (F) ITEM 401660 - SUPERPAVE, TYPE B HOT-MIX, 160 GYRATIONS, PG 76-22
- (G) ITEM 501006 - PORTLAND CEMENT CONCRETE PAVEMENT, 12"
- (H) ITEM 732002 - TOPSOIL, 6" DEPTH
- (I) ITEM 734013 - PERMANENT GRASS SEEDING, DRY GROUND
- (J) ITEM 602017 - PCC MASONRY, PARAPET, CLASS A
- (K) ITEM 735533 - SOIL RETENTION BLANKET MULCH, TYPE 3
- (L) ITEM 735534 - SOIL RETENTION BLANKET MULCH, TYPE 4
- (M) ITEM 735535 - SOIL RETENTION BLANKET MULCH, TYPE 5, UNLESS OTHERWISE NOTED, SEE DRAINAGE PLANS FOR LIMITS AND TYPE
- (N) ITEM 209001 - BORROW, TYPE A
- (O) ITEM 209006 - BORROW, TYPE F OR APPROVED PROJECT EXCAVATION
- (P) ITEM 715001 - PERFORATED PIPE UNDERDRAINS, 6"
- (Q) ITEM 760504 - RUMBLE STRIPS, HOT-MIX
- (R) ITEM 602772 - MECHANICALLY STABILIZED EARTH WALLS
- (S) ITEM 602773 - PCC MASONRY FOR MECHANICALLY STABILIZED EARTH WALLS
- (T) ITEM ~~720512~~ 3 720529 - PCC SAFETY BARRIER PERMANENT, SINGLE FACE
- (U) ITEM 720654 - PCC SAFETY BARRIER PERMANENT, SINGLE FACE, MODIFIED TYPE 1
- (V) ITEM 720587 - PCC SAFETY BARRIER PERMANENT, DOUBLE FACE, MODIFIED
- (W) ITEM 720655 - PCC SAFETY BARRIER PERMANENT, SINGLE FACE, MODIFIED TYPE 2
- (X) ITEM 712005 - RIPRAP, R-4
- (Y) ITEM 401665 - SUPERPAVE, TYPE C HOT-MIX, 160 GYRATIONS, PG 64-22, PATCHING
- (Z) ITEM 401666 - SUPERPAVE, TYPE B HOT-MIX, 160 GYRATIONS, PG 64-22, PATCHING
- (AA) ITEM 401667 - SUPERPAVE, BITUMINOUS CONCRETE BASE COURSE, 160 GYRATIONS, PG 64-22, PATCHING
- (BB) ITEM 302008 - GRADED AGGREGATE BASE COURSE, TYPE B, PATCHING
- (CC) ITEM 755000 - HOT-MIX, HOT LAID, BITUMINOUS CONCRETE CURB
- (DD) ITEM 701010 - PORTLAND CEMENT CONCRETE CURB, TYPE 1
- (EE) ITEM 701011 - PORTLAND CEMENT CONCRETE CURB, TYPE 2
- (FF) ITEM 701020 - INTEGRAL PORTLAND CEMENT CONCRETE CURB AND GUTTER, TYPE 1
- (GG) ITEM 701023 - INTEGRAL PORTLAND CEMENT CONCRETE CURB AND GUTTER, TYPE 4
- (HH) ITEM 701026 - PORTLAND CEMENT CONCRETE MONOLITHIC MEDIAN
- (II) ITEM 701027 - PORTLAND CEMENT CONCRETE CURB, TYPE 1 MODIFIED
- (JJ) ITEM 720658 - PCC SAFETY BARRIER PERMANENT SINGLE FACE, MODIFIED, TYPE 5
- (KK) ITEM 720050 - GALVANIZED STEEL BEAM GUARDRAIL, TYPE 1
- (LL) ITEM 760507 - PROFILE MILLING, HOT-MIX
- (MM) ITEM 720656 - PCC SAFETY BARRIER PERMANENT, SINGLE FACE, MODIFIED, TYPE 3
- (NN) ITEM 720657 - PCC SAFETY BARRIER PERMANENT, SINGLE FACE, MODIFIED, TYPE 4
- (OO) ITEM 720651 - PCC SAFETY BARRIER PERMANENT, DOUBLE FACE, BIFURCATED, TYPE 1
- (PP) ITEM 720652 - PCC SAFETY BARRIER PERMANENT, DOUBLE FACE, BIFURCATED, TYPE 2
- (RR) ITEM 401668 - SUPERPAVE, TYPE C HOT-MIX, 160 GYRATIONS, PG 64-22, WEDGE
- (SS) ITEM 401669 - SUPERPAVE, TYPE B HOT-MIX, 160 GYRATIONS, PG 64-22, WEDGE

PAVEMENT LIFT NOTE:

THE MAXIMUM LIFTS FOR THE INDIVIDUAL PAVING MATERIAL ARE AS FOLLOWS:
SUPERPAVE, TYPE C HOT-MIX - 2"
SUPERPAVE, TYPE B HOT-MIX - 3"
SUPERPAVE, BIT. CONC. BASE COURSE - 6"
GRADED AGGREGATE BASE COURSE - 8"

NOTES:

1) THE PGA IS APPLIED TO THE TOP OF THE FINAL PAVEMENT SURFACE.

2/15/2011 1:47:14 PM
M:\PROJECTS\2003\03059_DELTRNPK\SRIMALL\CADD\2809003\PLANS\TS35_SR1.DGN

DELAWARE DEPARTMENT OF TRANSPORTATION	ADDENDUMS / REVISIONS	NOT TO SCALE	SR1 / I-95 INTERCHANGE	CONTRACT 28-090-03	BRIDGE NO.	TYPICAL SECTIONS	SHEET NO. 42
	ADDENDUM NO. 3 CHANGED ITEM NO., 02/18/2011, RLS			COUNTY NEW CASTLE	DESIGNED BY:		TOTAL SHTS. 803
					CHECKED BY:		

UNOFFICIAL WEBSITE COPY

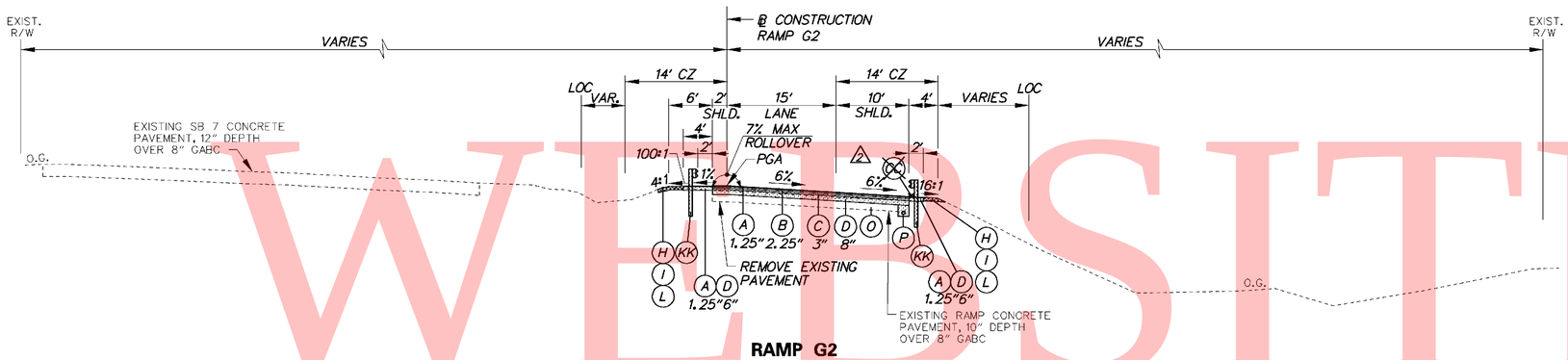

RAMP G2

STA. 1412+96.81 TO STA. 1414+40

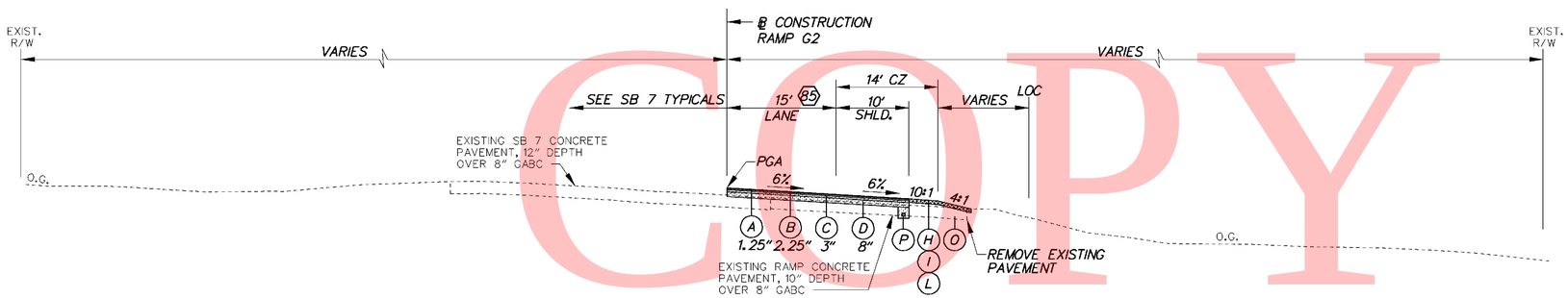

RAMP G2

STA. 1410+00 TO STA. 1412+96.81

(85) STA.1410+00 TO STA.1411+53.83
WIDTH TAPERS 12' TO 15'

LEGEND

- (A) ITEM 401708 - SUPERPAVE, TYPE C HOT-MIX, 160 GYRATIONS, PG 70-22 (NON-CARBONATE STONE)
- (B) ITEM 401654 - SUPERPAVE, TYPE B HOT-MIX, 160 GYRATIONS, PG 70-22
- (C) ITEM 401663 - SUPERPAVE, BITUMINOUS CONCRETE BASE COURSE, 160 GYRATIONS, PG 64-22
- (D) ITEM 302007 - GRADED AGGREGATE BASE COURSE, TYPE B
- (E) ITEM 401711 - SUPERPAVE, TYPE C HOT-MIX, 160 GYRATIONS, PG 76-22 (NON-CARBONATE STONE)
- (F) ITEM 401660 - SUPERPAVE, TYPE B HOT-MIX, 160 GYRATIONS, PG 76-22
- (G) ITEM 501006 - PORTLAND CEMENT CONCRETE PAVEMENT, 12"
- (H) ITEM 732002 - TOPSOIL, 6" DEPTH
- (I) ITEM 734013 - PERMANENT GRASS SEEDING, DRY GROUND
- (J) ITEM 602017 - PCC MASONRY, PARAPET, CLASS A
- (K) ITEM 735533 - SOIL RETENTION BLANKET MULCH, TYPE 3
- (L) ITEM 735534 - SOIL RETENTION BLANKET MULCH, TYPE 4
- (M) ITEM 735535 - SOIL RETENTION BLANKET MULCH, TYPE 5, UNLESS OTHERWISE NOTED, SEE DRAINAGE PLANS FOR LIMITS AND TYPE
- (N) ITEM 209001 - BORROW, TYPE A
- (O) ITEM 209006 - BORROW, TYPE F OR APPROVED PROJECT EXCAVATION
- (P) ITEM 715001 - PERFORATED PIPE UNDERDRAINS, 6"
- (Q) ITEM 760504 - RUMBLE STRIPS, HOT-MIX
- (R) ITEM 602772 - MECHANICALLY STABILIZED EARTH WALLS
- (S) ITEM 602773 - PCC MASONRY FOR MECHANICALLY STABILIZED EARTH WALLS
- (T) ITEM ~~720512~~ 720529 - PCC SAFETY BARRIER PERMANENT, SINGLE FACE
- (U) ITEM 720654 - PCC SAFETY BARRIER PERMANENT, SINGLE FACE, MODIFIED TYPE 1
- (V) ITEM 720587 - PCC SAFETY BARRIER PERMANENT, DOUBLE FACE, MODIFIED
- (W) ITEM 720655 - PCC SAFETY BARRIER PERMANENT, SINGLE FACE, MODIFIED TYPE 2
- (X) ITEM 712005 - RIPRAP, R-4
- (Y) ITEM 401665 - SUPERPAVE, TYPE C HOT-MIX, 160 GYRATIONS, PG 64-22, PATCHING
- (Z) ITEM 401666 - SUPERPAVE, TYPE B HOT-MIX, 160 GYRATIONS, PG 64-22, PATCHING
- (AA) ITEM 401667 - SUPERPAVE, BITUMINOUS CONCRETE BASE COURSE, 160 GYRATIONS, PG 64-22, PATCHING
- (BB) ITEM 302008 - GRADED AGGREGATE BASE COURSE, TYPE B, PATCHING
- (CC) ITEM 755000 - HOT-MIX, HOT LAID, BITUMINOUS CONCRETE CURB
- (DD) ITEM 701010 - PORTLAND CEMENT CONCRETE CURB, TYPE 1
- (EE) ITEM 701011 - PORTLAND CEMENT CONCRETE CURB, TYPE 2
- (FF) ITEM 701020 - INTEGRAL PORTLAND CEMENT CONCRETE CURB AND GUTTER, TYPE 1
- (GG) ITEM 701023 - INTEGRAL PORTLAND CEMENT CONCRETE CURB AND GUTTER, TYPE 4
- (HH) ITEM 701026 - PORTLAND CEMENT CONCRETE MONOLITHIC MEDIAN
- (II) ITEM 701027 - PORTLAND CEMENT CONCRETE CURB, TYPE 1 MODIFIED
- (JJ) ITEM 720658 - PCC SAFETY BARRIER PERMANENT SINGLE FACE, MODIFIED, TYPE 5
- (KK) ITEM 720050 - GALVANIZED STEEL BEAM GUARDRAIL, TYPE 1
- (LL) ITEM 760507 - PROFILE MILLING, HOT-MIX
- (MM) ITEM 720656 - PCC SAFETY BARRIER PERMANENT, SINGLE FACE, MODIFIED, TYPE 3
- (NN) ITEM 720657 - PCC SAFETY BARRIER PERMANENT, SINGLE FACE, MODIFIED, TYPE 4
- (OO) ITEM 720651 - PCC SAFETY BARRIER PERMANENT, DOUBLE FACE, BIFURCATED, TYPE 1
- (PP) ITEM 720652 - PCC SAFETY BARRIER PERMANENT, DOUBLE FACE, BIFURCATED, TYPE 2
- (RR) ITEM 401668 - SUPERPAVE, TYPE C HOT-MIX, 160 GYRATIONS, PG 64-22, WEDGE
- (SS) ITEM 401669 - SUPERPAVE, TYPE B HOT-MIX, 160 GYRATIONS, PG 64-22, WEDGE

PAVEMENT LIFT NOTE:

THE MAXIMUM LIFTS FOR THE INDIVIDUAL PAVING MATERIAL ARE AS FOLLOWS:
SUPERPAVE, TYPE C HOT-MIX - 2"
SUPERPAVE, TYPE B HOT-MIX - 3"
SUPERPAVE, BIT. CONC. BASE COURSE - 6"
GRADED AGGREGATE BASE COURSE - 8"

NOTES:

1) THE PGA IS APPLIED TO THE TOP OF THE FINAL PAVEMENT SURFACE.

2/15/2011 1:48:16 PM
M:\PROJECTS\2003\03059_DELTRNPK\SRIMALL\CADD\2809003\PLANS\TS37_SR1.DGN

DELAWARE DEPARTMENT OF TRANSPORTATION	ADDENDUMS / REVISIONS	NOT TO SCALE	SR1 / I-95 INTERCHANGE	CONTRACT 28-090-03	BRIDGE NO.	TYPICAL SECTIONS	SHEET NO. 43
	ADDENDUM NO. 2 REMOVED BITUMIONOUS CURB, 01/26/2011, RLS			COUNTY NEW CASTLE	DESIGNED BY:		TOTAL SHTS. 803
	ADDENDUM NO. 3 CHANGED ITEM NO., 02/18/2011, RLS				CHECKED BY:		

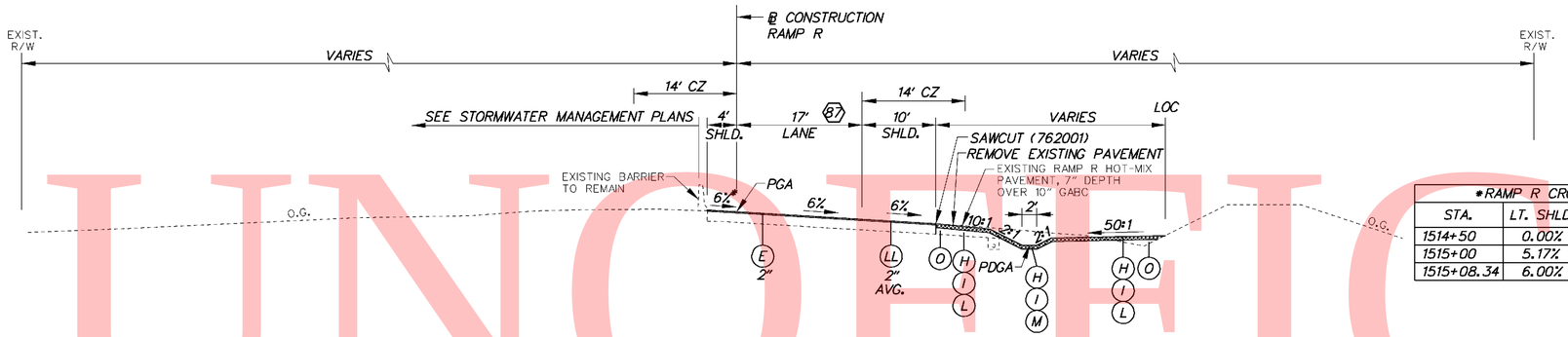

RAMP R

STA. 1514+18.76 TO STA. 1515+50.00

87 STA. 1514+18.76 TO STA. 1515+08.34
WIDTH TAPERS 15.34' TO 17'

*RAMP R CROSS-SLOPES

STA.	LT. SHLD.	LANES	RT. SHLD.
1514+50	0.00%	-6.00%	-6.00%
1515+00	5.17%	-6.00%	-6.00%
1515+08.34	6.00%	-6.00%	-6.00%

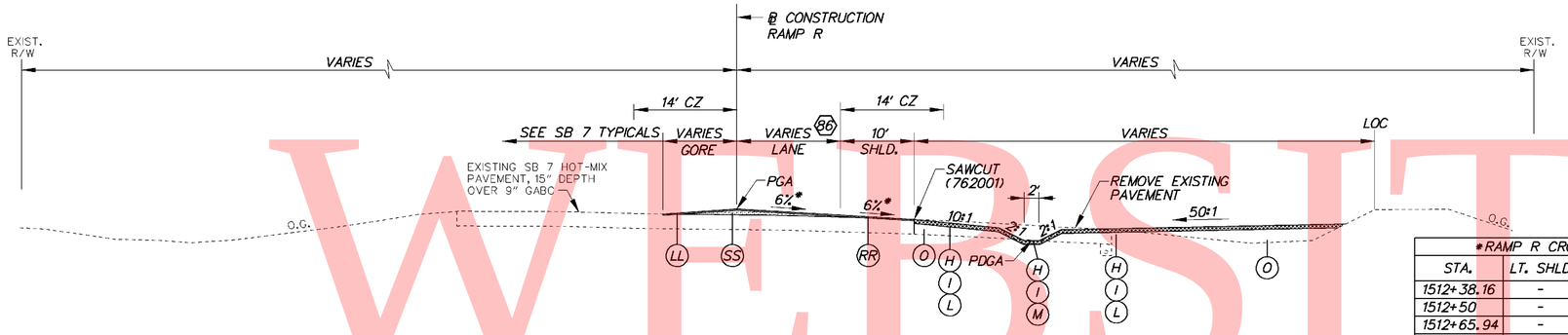

RAMP R

STA. 1512+38.16 TO STA. 1514+18.76

86 STA. 1512+38.16 TO STA. 1514+18.76
WIDTH TAPERS 12' TO 15.34'

*RAMP R CROSS-SLOPES

STA.	LT. SHLD.	LANES	RT. SHLD.
1512+38.16	-	-2.00%	-4.00%
1512+50	-	-2.43%	-4.00%
1512+65.94	-	-3.00%	-4.00%
1512+93.72	-	-4.00%	-4.00%
1513+00	-	-4.23%	-4.23%
1513+49.27	-	-6.00%	-6.00%

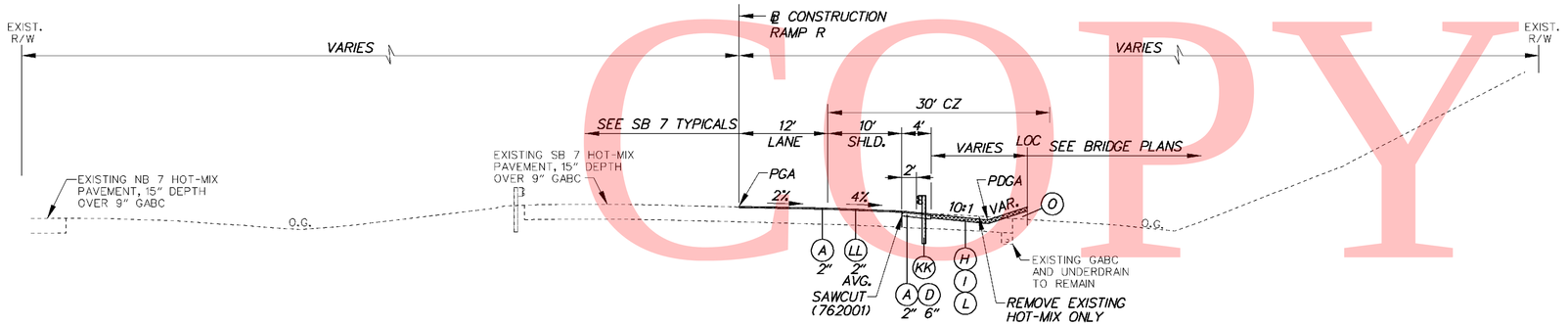

RAMP R

STA. 1510+00.00 TO STA. 1512+38.16

LEGEND

- (A) ITEM 401708 - SUPERPAVE, TYPE C HOT-MIX, 160 GYRATIONS, PG 70-22 (NON-CARBONATE STONE)
- (B) ITEM 401654 - SUPERPAVE, TYPE B HOT-MIX, 160 GYRATIONS, PG 70-22
- (C) ITEM 401663 - SUPERPAVE, BITUMINOUS CONCRETE BASE COURSE, 160 GYRATIONS, PG 64-22
- (D) ITEM 302007 - GRADED AGGREGATE BASE COURSE, TYPE B
- (E) ITEM 401711 - SUPERPAVE, TYPE C HOT-MIX, 160 GYRATIONS, PG 76-22 (NON-CARBONATE STONE)
- (F) ITEM 401660 - SUPERPAVE, TYPE B HOT-MIX, 160 GYRATIONS, PG 76-22
- (G) ITEM 501006 - PORTLAND CEMENT CONCRETE PAVEMENT, 12"
- (H) ITEM 732002 - TOPSOIL, 6" DEPTH
- (I) ITEM 734013 - PERMANENT GRASS SEEDING, DRY GROUND
- (J) ITEM 602017 - PCC MASONRY, PARAPET, CLASS A
- (K) ITEM 735533 - SOIL RETENTION BLANKET MULCH, TYPE 3
- (L) ITEM 735534 - SOIL RETENTION BLANKET MULCH, TYPE 4
- (M) ITEM 735535 - SOIL RETENTION BLANKET MULCH, TYPE 5, UNLESS OTHERWISE NOTED, SEE DRAINAGE PLANS FOR LIMITS AND TYPE
- (N) ITEM 209001 - BORROW, TYPE A
- (O) ITEM 209006 - BORROW, TYPE F OR APPROVED PROJECT EXCAVATION
- (P) ITEM 715001 - PERFORATED PIPE UNDERDRAINS, 6"
- (Q) ITEM 760504 - RUMBLE STRIPS, HOT-MIX
- (R) ITEM 602772 - MECHANICALLY STABILIZED EARTH WALLS
- (S) ITEM 602773 - PCC MASONRY FOR MECHANICALLY STABILIZED EARTH WALLS
- (T) ITEM ~~720512~~ 3 720529 - PCC SAFETY BARRIER PERMANENT, SINGLE FACE
- (U) ITEM 720654 - PCC SAFETY BARRIER PERMANENT, SINGLE FACE, MODIFIED TYPE 1
- (V) ITEM 720587 - PCC SAFETY BARRIER PERMANENT, DOUBLE FACE, MODIFIED
- (W) ITEM 720655 - PCC SAFETY BARRIER PERMANENT, SINGLE FACE, MODIFIED TYPE 2
- (X) ITEM 712005 - RIPRAP, R-4
- (Y) ITEM 401665 - SUPERPAVE, TYPE C HOT-MIX, 160 GYRATIONS, PG 64-22, PATCHING
- (Z) ITEM 401666 - SUPERPAVE, TYPE B HOT-MIX, 160 GYRATIONS, PG 64-22, PATCHING
- (AA) ITEM 401667 - SUPERPAVE, BITUMINOUS CONCRETE BASE COURSE, 160 GYRATIONS, PG 64-22, PATCHING
- (BB) ITEM 302008 - GRADED AGGREGATE BASE COURSE, TYPE B, PATCHING
- (CC) ITEM 755000 - HOT-MIX, HOT LAID, BITUMINOUS CONCRETE CURB
- (DD) ITEM 701010 - PORTLAND CEMENT CONCRETE CURB, TYPE 1
- (EE) ITEM 701011 - PORTLAND CEMENT CONCRETE CURB, TYPE 2
- (FF) ITEM 701020 - INTEGRAL PORTLAND CEMENT CONCRETE CURB AND GUTTER, TYPE 1
- (GG) ITEM 701023 - INTEGRAL PORTLAND CEMENT CONCRETE CURB AND GUTTER, TYPE 4
- (HH) ITEM 701026 - PORTLAND CEMENT CONCRETE MONOLITHIC MEDIAN
- (II) ITEM 701027 - PORTLAND CEMENT CONCRETE CURB, TYPE 1 MODIFIED
- (JJ) ITEM 720658 - PCC SAFETY BARRIER PERMANENT SINGLE FACE, MODIFIED, TYPE 5
- (KK) ITEM 720050 - GALVANIZED STEEL BEAM GUARDRAIL, TYPE 1
- (LL) ITEM 760507 - PROFILE MILLING, HOT-MIX
- (MM) ITEM 720656 - PCC SAFETY BARRIER PERMANENT, SINGLE FACE, MODIFIED, TYPE 3
- (NN) ITEM 720657 - PCC SAFETY BARRIER PERMANENT, SINGLE FACE, MODIFIED, TYPE 4
- (OO) ITEM 720651 - PCC SAFETY BARRIER PERMANENT, DOUBLE FACE, BIFURCATED, TYPE 1
- (PP) ITEM 720652 - PCC SAFETY BARRIER PERMANENT, DOUBLE FACE, BIFURCATED, TYPE 2
- (RR) ITEM 401668 - SUPERPAVE, TYPE C HOT-MIX, 160 GYRATIONS, PG 64-22, WEDGE
- (SS) ITEM 401669 - SUPERPAVE, TYPE B HOT-MIX, 160 GYRATIONS, PG 64-22, WEDGE

PAVEMENT LIFT NOTE:

THE MAXIMUM LIFTS FOR THE INDIVIDUAL PAVING MATERIAL ARE AS FOLLOWS:
SUPERPAVE, TYPE C HOT-MIX - 2"
SUPERPAVE, TYPE B HOT-MIX - 3"
SUPERPAVE, BIT. CONC. BASE COURSE - 6"
GRADED AGGREGATE BASE COURSE - 8"

NOTES:

1) THE PGA IS APPLIED TO THE TOP OF THE FINAL PAVEMENT SURFACE.

UNOFFICIAL WEBSITE COPY

2/15/2011 1:50:55 PM
M:\PROJECTS\2003\03059_DELTRNPK\SR1MALL\CADD\2809003\PLANS\TS38_SR1.DGN

DELAWARE DEPARTMENT OF TRANSPORTATION	ADDENDUMS / REVISIONS	NOT TO SCALE	SR1 / I-95 INTERCHANGE	CONTRACT 28-090-03	BRIDGE NO.	TYPICAL SECTIONS	SHEET NO. 44
	ADDENDUM NO. 3 CHANGED ITEM NO., 02/18/2011, RLS			COUNTY NEW CASTLE	DESIGNED BY:		TOTAL SHTS. 803
					CHECKED BY:		

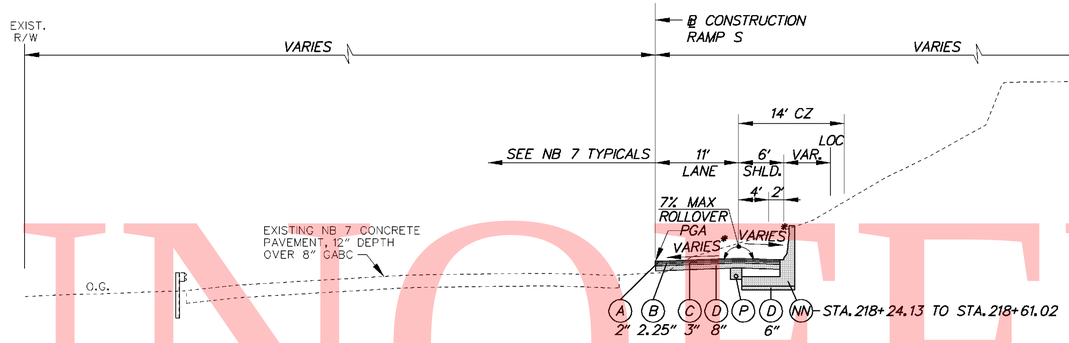

*RAMP S CROSS-SLOPES			
STA.	LT. SHLD.	LANES	RT. SHLD.
218+31.02	-	3.00%	-4.00%
218+50	-	3.63%	-3.37%
218+61.02	-	4.00%	-3.00%

RAMP S

STA. 218+24.13 TO STA. 218+61.02

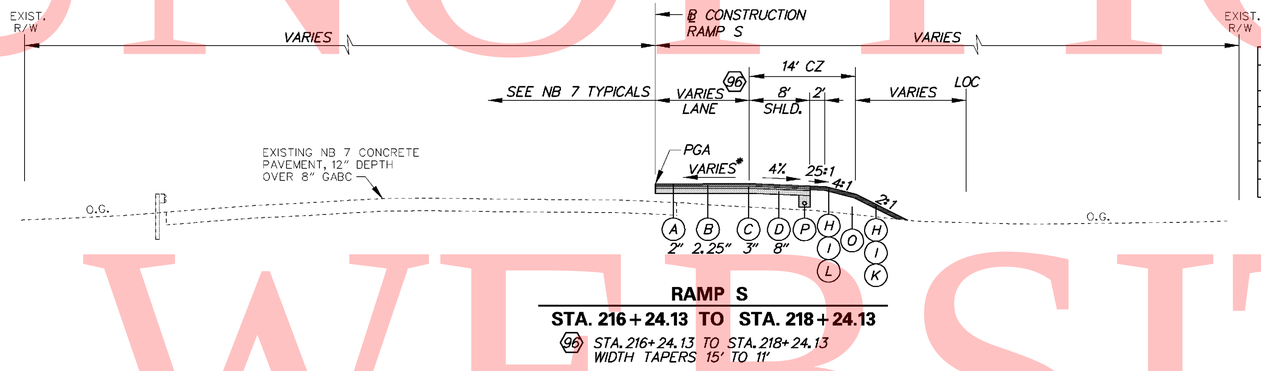

*RAMP S CROSS-SLOPES			
STA.	LT. SHLD.	LANES	RT. SHLD.
216+81.02	-	-2.00%	-4.00%
217+00	-	-1.37%	-4.00%
217+41.02	-	0.00%	-4.00%
217+50	-	0.30%	-4.00%
218+00	-	1.97%	-4.00%
218+01.02	-	2.00%	-4.00%

RAMP S

STA. 216+24.13 TO STA. 218+24.13

(96) STA. 216+24.13 TO STA. 218+24.13 WIDTH TAPERS 15' TO 11'

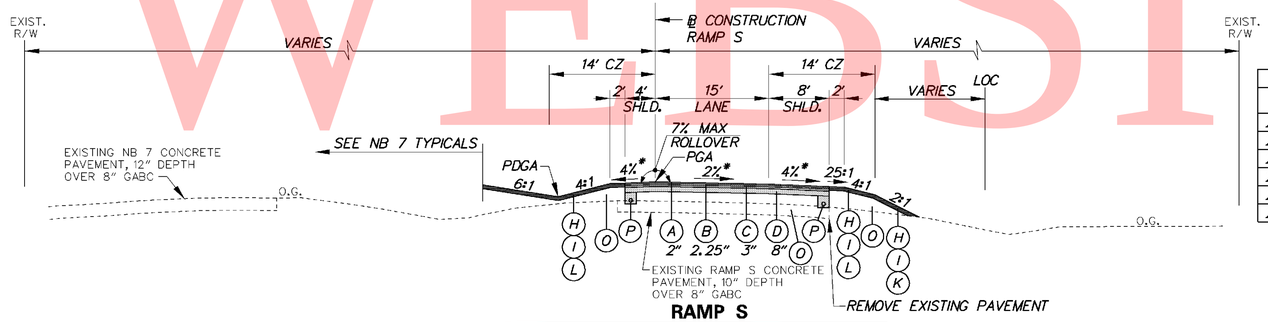

*RAMP S CROSS-SLOPES			
STA.	LT. SHLD.	LANES	RT. SHLD.
213+94.11	-1.00%	-6.00%	-6.00%
214+00	-1.24%	-5.76%	-5.76%
214+42.78	-3.00%	-4.00%	-4.00%
214+50	-3.30%	-3.70%	-4.00%
214+67.12	-4.00%	-3.00%	-4.00%
214+91.45	-4.00%	-2.00%	-4.00%

RAMP S

STA. 214+50.00 TO STA. 216+24.13

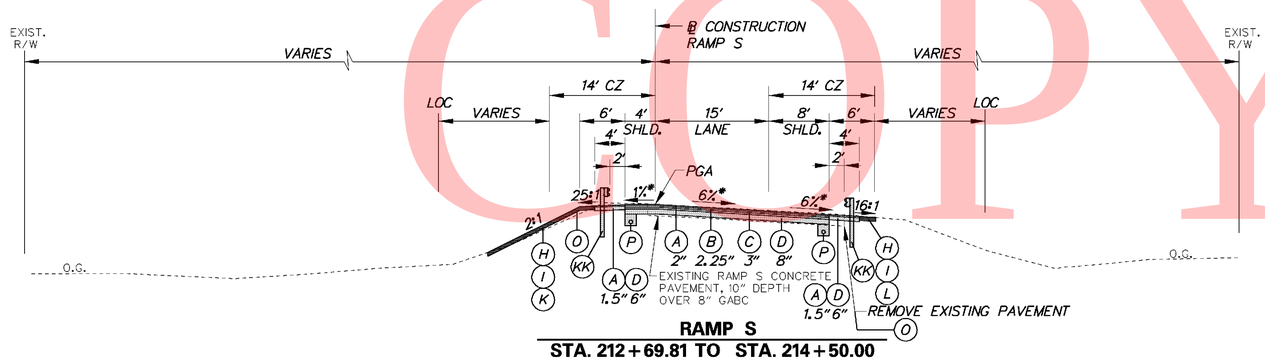

RAMP S

STA. 212+69.81 TO STA. 214+50.00

LEGEND

- (A) ITEM 401708 - SUPERPAVE, TYPE C HOT-MIX, 160 GYRATIONS, PG 70-22 (NON-CARBONATE STONE)
- (B) ITEM 401654 - SUPERPAVE, TYPE B HOT-MIX, 160 GYRATIONS, PG 70-22
- (C) ITEM 401663 - SUPERPAVE, BITUMINOUS CONCRETE BASE COURSE, 160 GYRATIONS, PG 64-22
- (D) ITEM 302007 - GRADED AGGREGATE BASE COURSE, TYPE B
- (E) ITEM 401711 - SUPERPAVE, TYPE C HOT-MIX, 160 GYRATIONS, PG 76-22 (NON-CARBONATE STONE)
- (F) ITEM 401660 - SUPERPAVE, TYPE B HOT-MIX, 160 GYRATIONS, PG 76-22
- (G) ITEM 501006 - PORTLAND CEMENT CONCRETE PAVEMENT, 12"
- (H) ITEM 732002 - TOPSOIL, 6" DEPTH
- (I) ITEM 734013 - PERMANENT GRASS SEEDING, DRY GROUND
- (J) ITEM 602017 - PCC MASONRY, PARAPET, CLASS A
- (K) ITEM 735533 - SOIL RETENTION BLANKET MULCH, TYPE 3
- (L) ITEM 735534 - SOIL RETENTION BLANKET MULCH, TYPE 4
- (M) ITEM 735535 - SOIL RETENTION BLANKET MULCH, TYPE 5, UNLESS OTHERWISE NOTED, SEE DRAINAGE PLANS FOR LIMITS AND TYPE
- (N) ITEM 209001 - BORROW, TYPE A
- (O) ITEM 209006 - BORROW, TYPE F OR APPROVED PROJECT EXCAVATION
- (P) ITEM 715001 - PERFORATED PIPE UNDERDRAINS, 6"
- (Q) ITEM 760504 - RUMBLE STRIPS, HOT-MIX
- (R) ITEM 602772 - MECHANICALLY STABILIZED EARTH WALLS
- (S) ITEM 602773 - PCC MASONRY FOR MECHANICALLY STABILIZED EARTH WALLS
- (T) ITEM ~~720512~~ 3 720529 - PCC SAFETY BARRIER PERMANENT, SINGLE FACE
- (U) ITEM 720654 - PCC SAFETY BARRIER PERMANENT, SINGLE FACE, MODIFIED TYPE 1
- (V) ITEM 720587 - PCC SAFETY BARRIER PERMANENT, DOUBLE FACE, MODIFIED
- (W) ITEM 720655 - PCC SAFETY BARRIER PERMANENT, SINGLE FACE, MODIFIED TYPE 2
- (X) ITEM 712005 - RIPRAP, R-4
- (Y) ITEM 401665 - SUPERPAVE, TYPE C HOT-MIX, 160 GYRATIONS, PG 64-22, PATCHING
- (Z) ITEM 401666 - SUPERPAVE, TYPE B HOT-MIX, 160 GYRATIONS, PG 64-22, PATCHING
- (AA) ITEM 401667 - SUPERPAVE, BITUMINOUS CONCRETE BASE COURSE, 160 GYRATIONS, PG 64-22, PATCHING
- (BB) ITEM 302008 - GRADED AGGREGATE BASE COURSE, TYPE B, PATCHING
- (CC) ITEM 755000 - HOT-MIX, HOT LAID, BITUMINOUS CONCRETE CURB
- (DD) ITEM 701010 - PORTLAND CEMENT CONCRETE CURB, TYPE 1
- (EE) ITEM 701011 - PORTLAND CEMENT CONCRETE CURB, TYPE 2
- (FF) ITEM 701020 - INTEGRAL PORTLAND CEMENT CONCRETE CURB AND GUTTER, TYPE 1
- (GG) ITEM 701023 - INTEGRAL PORTLAND CEMENT CONCRETE CURB AND GUTTER, TYPE 4
- (HH) ITEM 701026 - PORTLAND CEMENT CONCRETE MONOLITHIC MEDIAN
- (II) ITEM 701027 - PORTLAND CEMENT CONCRETE CURB, TYPE 1 MODIFIED
- (JJ) ITEM 720658 - PCC SAFETY BARRIER PERMANENT SINGLE FACE, MODIFIED, TYPE 5
- (KK) ITEM 720050 - GALVANIZED STEEL BEAM GUARDRAIL, TYPE 1
- (LL) ITEM 760507 - PROFILE MILLING, HOT-MIX
- (MM) ITEM 720656 - PCC SAFETY BARRIER PERMANENT, SINGLE FACE, MODIFIED, TYPE 3
- (NN) ITEM 720657 - PCC SAFETY BARRIER PERMANENT, SINGLE FACE, MODIFIED, TYPE 4
- (OO) ITEM 720651 - PCC SAFETY BARRIER PERMANENT, DOUBLE FACE, BIFURCATED, TYPE 1
- (PP) ITEM 720652 - PCC SAFETY BARRIER PERMANENT, DOUBLE FACE, BIFURCATED, TYPE 2
- (RR) ITEM 401668 - SUPERPAVE, TYPE C HOT-MIX, 160 GYRATIONS, PG 64-22, WEDGE
- (SS) ITEM 401669 - SUPERPAVE, TYPE B HOT-MIX, 160 GYRATIONS, PG 64-22, WEDGE

PAVEMENT LIFT NOTE:

THE MAXIMUM LIFTS FOR THE INDIVIDUAL PAVING MATERIAL ARE AS FOLLOWS:
SUPERPAVE, TYPE C HOT-MIX - 2"
SUPERPAVE, TYPE B HOT-MIX - 3"
SUPERPAVE, BIT. CONC. BASE COURSE - 6"
GRADED AGGREGATE BASE COURSE - 8"

NOTES:

1) THE PGA IS APPLIED TO THE TOP OF THE FINAL PAVEMENT SURFACE.

UNOFFICIAL WEBSITE COPY

8/25/2010 3:52:53 PM
M:\PROJECTS\2003\03059_DELTRNPK\SRIMALL\CADD\2809003\PLANS\TS41_SR1.DGN

DELAWARE DEPARTMENT OF TRANSPORTATION	ADDENDUMS / REVISIONS	NOT TO SCALE	SR1 / I-95 INTERCHANGE	CONTRACT 28-090-03	BRIDGE NO.	TYPICAL SECTIONS	SHEET NO. 45
	ADDENDUM NO. 3 CHANGED ITEM NO., 02/18/2011, RLS			COUNTY NEW CASTLE	DESIGNED BY: CHECKED BY:		TOTAL SHTS. 803

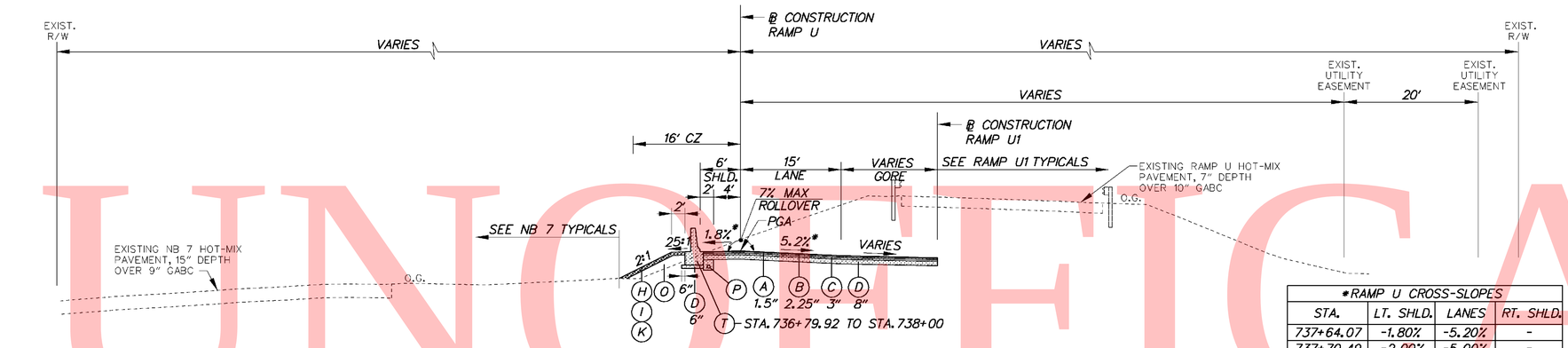

RAMP U

STA. 737+16.46 TO STA. 738+00

*RAMP U CROSS-SLOPES

STA.	LT. SHLD.	LANES	RT. SHLD.
737+64.07	-1.80%	-5.20%	-
737+70.49	-2.00%	-5.00%	-
738+00	-3.00%	-4.00%	-

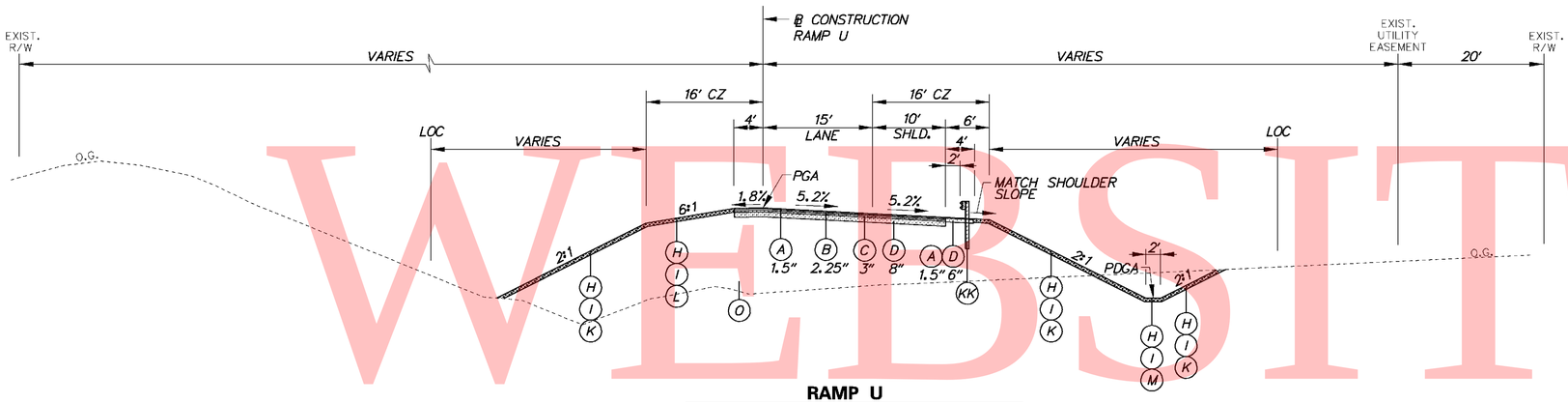

RAMP U

STA. 731+86.70 TO STA. 737+16.46

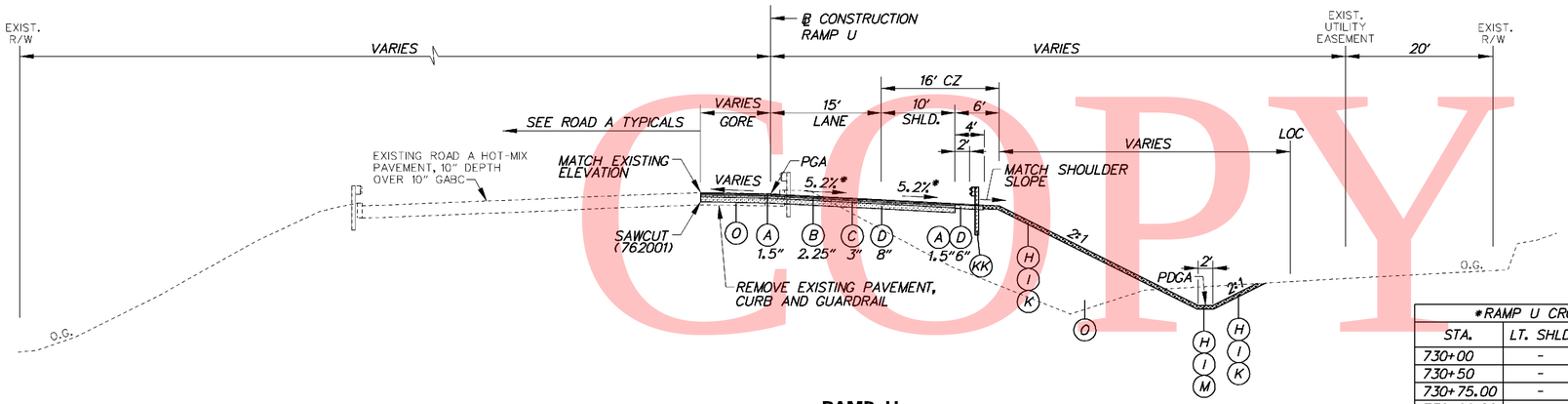

RAMP U

STA. 730+00 TO STA. 731+86.70

*RAMP U CROSS-SLOPES

STA.	LT. SHLD.	LANES	RT. SHLD.
730+00	-	-2.00%	-4.00%
730+50	-	-3.67%	-4.00%
730+75.00	-	-4.50%	-4.00%
730+96.00	-	-5.20%	-5.20%

LEGEND

- (A) ITEM 401708 - SUPERPAVE, TYPE C HOT-MIX, 160 GYRATIONS, PG 70-22 (NON-CARBONATE STONE)
- (B) ITEM 401654 - SUPERPAVE, TYPE B HOT-MIX, 160 GYRATIONS, PG 70-22
- (C) ITEM 401663 - SUPERPAVE, BITUMINOUS CONCRETE BASE COURSE, 160 GYRATIONS, PG 64-22
- (D) ITEM 302007 - GRADED AGGREGATE BASE COURSE, TYPE B
- (E) ITEM 401711 - SUPERPAVE, TYPE C HOT-MIX, 160 GYRATIONS, PG 76-22 (NON-CARBONATE STONE)
- (F) ITEM 401660 - SUPERPAVE, TYPE B HOT-MIX, 160 GYRATIONS, PG 76-22
- (G) ITEM 501006 - PORTLAND CEMENT CONCRETE PAVEMENT, 12"
- (H) ITEM 732002 - TOPSOIL, 6" DEPTH
- (I) ITEM 734013 - PERMANENT GRASS SEEDING, DRY GROUND
- (J) ITEM 602017 - PCC MASONRY, PARAPET, CLASS A
- (K) ITEM 735533 - SOIL RETENTION BLANKET MULCH, TYPE 3
- (L) ITEM 735534 - SOIL RETENTION BLANKET MULCH, TYPE 4
- (M) ITEM 735535 - SOIL RETENTION BLANKET MULCH, TYPE 5, UNLESS OTHERWISE NOTED, SEE DRAINAGE PLANS FOR LIMITS AND TYPE
- (N) ITEM 209001 - BORROW, TYPE A
- (O) ITEM 209006 - BORROW, TYPE F OR APPROVED PROJECT EXCAVATION
- (P) ITEM 715001 - PERFORATED PIPE UNDERDRAINS, 6"
- (Q) ITEM 760504 - RUMBLE STRIPS, HOT-MIX
- (R) ITEM 602772 - MECHANICALLY STABILIZED EARTH WALLS
- (S) ITEM 602773 - PCC MASONRY FOR MECHANICALLY STABILIZED EARTH WALLS
- (T) ITEM ~~720512~~ 3 720529 - PCC SAFETY BARRIER PERMANENT, SINGLE FACE
- (U) ITEM 720654 - PCC SAFETY BARRIER PERMANENT, SINGLE FACE, MODIFIED TYPE 1
- (V) ITEM 720587 - PCC SAFETY BARRIER PERMANENT, DOUBLE FACE, MODIFIED
- (W) ITEM 720655 - PCC SAFETY BARRIER PERMANENT, SINGLE FACE, MODIFIED TYPE 2
- (X) ITEM 712005 - RIPRAP, R-4
- (Y) ITEM 401665 - SUPERPAVE, TYPE C HOT-MIX, 160 GYRATIONS, PG 64-22, PATCHING
- (Z) ITEM 401666 - SUPERPAVE, TYPE B HOT-MIX, 160 GYRATIONS, PG 64-22, PATCHING
- (AA) ITEM 401667 - SUPERPAVE, BITUMINOUS CONCRETE BASE COURSE, 160 GYRATIONS, PG 64-22, PATCHING
- (BB) ITEM 302008 - GRADED AGGREGATE BASE COURSE, TYPE B, PATCHING
- (CC) ITEM 755000 - HOT-MIX, HOT LAID, BITUMINOUS CONCRETE CURB
- (DD) ITEM 701010 - PORTLAND CEMENT CONCRETE CURB, TYPE 1
- (EE) ITEM 701011 - PORTLAND CEMENT CONCRETE CURB, TYPE 2
- (FF) ITEM 701020 - INTEGRAL PORTLAND CEMENT CONCRETE CURB AND GUTTER, TYPE 1
- (GG) ITEM 701023 - INTEGRAL PORTLAND CEMENT CONCRETE CURB AND GUTTER, TYPE 4
- (HH) ITEM 701026 - PORTLAND CEMENT CONCRETE MONOLITHIC MEDIAN
- (II) ITEM 701027 - PORTLAND CEMENT CONCRETE CURB, TYPE 1 MODIFIED
- (JJ) ITEM 720658 - PCC SAFETY BARRIER PERMANENT SINGLE FACE, MODIFIED, TYPE 5
- (KK) ITEM 720050 - GALVANIZED STEEL BEAM GUARDRAIL, TYPE 1
- (LL) ITEM 760507 - PROFILE MILLING, HOT-MIX
- (MM) ITEM 720656 - PCC SAFETY BARRIER PERMANENT, SINGLE FACE, MODIFIED, TYPE 3
- (NN) ITEM 720657 - PCC SAFETY BARRIER PERMANENT, SINGLE FACE, MODIFIED, TYPE 4
- (OO) ITEM 720651 - PCC SAFETY BARRIER PERMANENT, DOUBLE FACE, BIFURCATED, TYPE 1
- (PP) ITEM 720652 - PCC SAFETY BARRIER PERMANENT, DOUBLE FACE, BIFURCATED, TYPE 2
- (RR) ITEM 401668 - SUPERPAVE, TYPE C HOT-MIX, 160 GYRATIONS, PG 64-22, WEDGE
- (SS) ITEM 401669 - SUPERPAVE, TYPE B HOT-MIX, 160 GYRATIONS, PG 64-22, WEDGE

PAVEMENT LIFT NOTE:

THE MAXIMUM LIFTS FOR THE INDIVIDUAL PAVING MATERIAL ARE AS FOLLOWS:
SUPERPAVE, TYPE C HOT-MIX - 2"
SUPERPAVE, TYPE B HOT-MIX - 3"
SUPERPAVE, BIT. CONC. BASE COURSE - 6"
GRADED AGGREGATE BASE COURSE - 8"

NOTES:

1) THE PGA IS APPLIED TO THE TOP OF THE FINAL PAVEMENT SURFACE.

UNOFFICIAL WEBSITE COPY

2/15/2011 1:53:06 PM
M:\PROJECTS\2003\03059_DELTRNPK\SRTMALL\CADD\2809003\PLANS\TS42_SR1.DGN

DELAWARE DEPARTMENT OF TRANSPORTATION	ADDENDUMS / REVISIONS	NOT TO SCALE	SR1 / I-95 INTERCHANGE	CONTRACT 28-090-03	BRIDGE NO.	TYPICAL SECTIONS	SHEET NO. 46
	ADDENDUM NO. 3 CHANGED ITEM NO., 02/18/2011, RLS			COUNTY NEW CASTLE	DESIGNED BY:		TOTAL SHTS. 803
					CHECKED BY:		

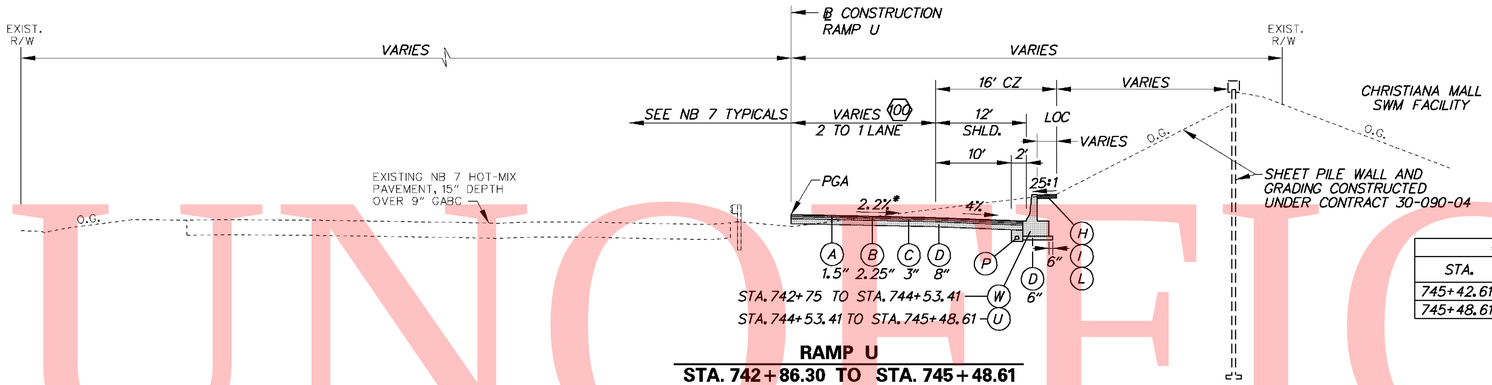

RAMP U

STA. 742+86.30 TO STA. 745+48.61

(100) STA. 742+86.30 TO STA. 745+48.61
WIDTH TAPERS 20.53' TO 12'

*RAMP U CROSS-SLOPES			
STA.	LT. SHLD.	LANES	RT. SHLD.
745+42.61	-	-2.20%	-4.00%
745+48.61	-	-2.00%	-4.00%

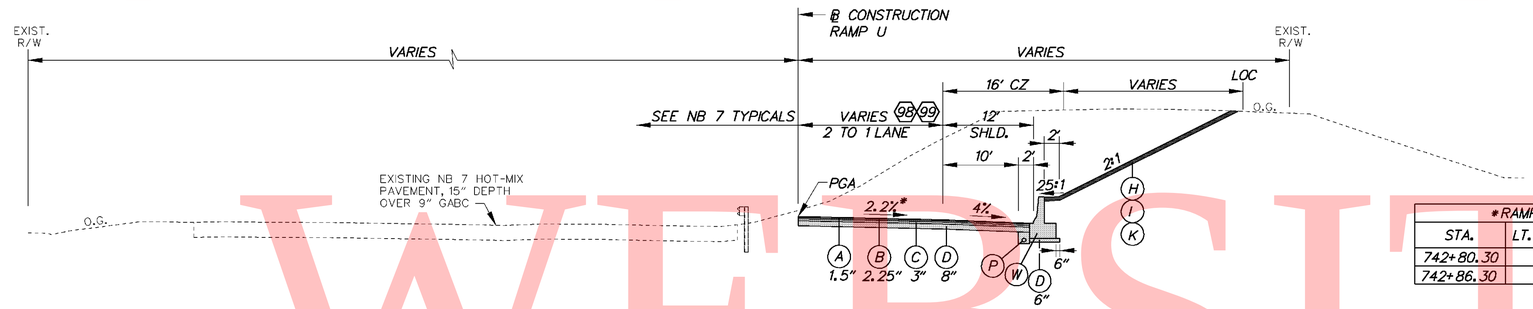

RAMP U

STA. 740+74.68 TO STA. 742+86.30

(98) STA. 740+74.68 TO STA. 741+79.92
WIDTH TAPERS 25.66' TO 24'

(99) STA. 741+79.92 TO STA. 742+86.30
WIDTH TAPERS 24' TO 20.53'

*RAMP U CROSS-SLOPES			
STA.	LT. SHLD.	LANES	RT. SHLD.
742+80.30	-	-2.00%	-4.00%
742+86.30	-	-2.20%	-4.00%

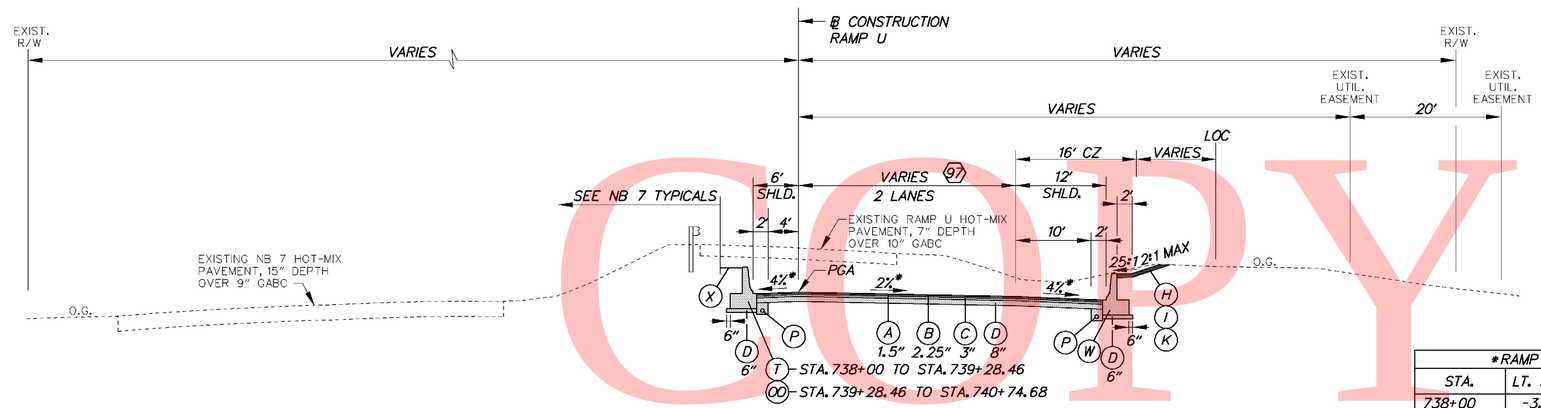

RAMP U

STA. 738+00 TO STA. 740+74.68

(97) STA. 738+00 TO STA. 740+74.68
WIDTH TAPERS 30' TO 25.66'

*RAMP U CROSS-SLOPES			
STA.	LT. SHLD.	LANES	RT. SHLD.
738+00	-3.00%	-4.00%	-
738+00.07	-3.00%	-4.00%	-4.00%
738+30.07	-4.00%	-3.00%	-4.00%
738+50	-4.00%	-2.34%	-4.00%
738+60.07	-4.00%	-2.00%	-4.00%

LEGEND

- (A) ITEM 401708 - SUPERPAVE, TYPE C HOT-MIX, 160 GYRATIONS, PG 70-22 (NON-CARBONATE STONE)
- (B) ITEM 401654 - SUPERPAVE, TYPE B HOT-MIX, 160 GYRATIONS, PG 70-22
- (C) ITEM 401663 - SUPERPAVE, BITUMINOUS CONCRETE BASE COURSE, 160 GYRATIONS, PG 64-22
- (D) ITEM 302007 - GRADED AGGREGATE BASE COURSE, TYPE B
- (E) ITEM 401711 - SUPERPAVE, TYPE C HOT-MIX, 160 GYRATIONS, PG 76-22 (NON-CARBONATE STONE)
- (F) ITEM 401660 - SUPERPAVE, TYPE B HOT-MIX, 160 GYRATIONS, PG 76-22
- (G) ITEM 501006 - PORTLAND CEMENT CONCRETE PAVEMENT, 12"
- (H) ITEM 732002 - TOPSOIL, 6" DEPTH
- (I) ITEM 734013 - PERMANENT GRASS SEEDING, DRY GROUND
- (J) ITEM 602017 - PCC MASONRY, PARAPET, CLASS A
- (K) ITEM 735533 - SOIL RETENTION BLANKET MULCH, TYPE 3
- (L) ITEM 735534 - SOIL RETENTION BLANKET MULCH, TYPE 4
- (M) ITEM 735535 - SOIL RETENTION BLANKET MULCH, TYPE 5, UNLESS OTHERWISE NOTED, SEE DRAINAGE PLANS FOR LIMITS AND TYPE
- (N) ITEM 209001 - BORROW, TYPE A
- (O) ITEM 209006 - BORROW, TYPE F OR APPROVED PROJECT EXCAVATION
- (P) ITEM 715001 - PERFORATED PIPE UNDERDRAINS, 6"
- (Q) ITEM 760504 - RUMBLE STRIPS, HOT-MIX
- (R) ITEM 602772 - MECHANICALLY STABILIZED EARTH WALLS
- (S) ITEM 602773 - PCC MASONRY FOR MECHANICALLY STABILIZED EARTH WALLS
- (T) ITEM ~~720512~~ 3 720529 - PCC SAFETY BARRIER PERMANENT, SINGLE FACE
- (U) ITEM 720654 - PCC SAFETY BARRIER PERMANENT, SINGLE FACE, MODIFIED TYPE 1
- (V) ITEM 720587 - PCC SAFETY BARRIER PERMANENT, DOUBLE FACE, MODIFIED
- (W) ITEM 720655 - PCC SAFETY BARRIER PERMANENT, SINGLE FACE, MODIFIED TYPE 2
- (X) ITEM 712005 - RIPRAP, R-4
- (Y) ITEM 401665 - SUPERPAVE, TYPE C HOT-MIX, 160 GYRATIONS, PG 64-22, PATCHING
- (Z) ITEM 401666 - SUPERPAVE, TYPE B HOT-MIX, 160 GYRATIONS, PG 64-22, PATCHING
- (AA) ITEM 401667 - SUPERPAVE, BITUMINOUS CONCRETE BASE COURSE, 160 GYRATIONS, PG 64-22, PATCHING
- (BB) ITEM 302008 - GRADED AGGREGATE BASE COURSE, TYPE B, PATCHING
- (CC) ITEM 755000 - HOT-MIX, HOT LAID, BITUMINOUS CONCRETE CURB
- (DD) ITEM 701010 - PORTLAND CEMENT CONCRETE CURB, TYPE 1
- (EE) ITEM 701011 - PORTLAND CEMENT CONCRETE CURB, TYPE 2
- (FF) ITEM 701020 - INTEGRAL PORTLAND CEMENT CONCRETE CURB AND GUTTER, TYPE 1
- (GG) ITEM 701023 - INTEGRAL PORTLAND CEMENT CONCRETE CURB AND GUTTER, TYPE 4
- (HH) ITEM 701026 - PORTLAND CEMENT CONCRETE MONOLITHIC MEDIAN
- (II) ITEM 701027 - PORTLAND CEMENT CONCRETE CURB, TYPE 1 MODIFIED
- (JJ) ITEM 720658 - PCC SAFETY BARRIER PERMANENT SINGLE FACE, MODIFIED, TYPE 5
- (KK) ITEM 720050 - GALVANIZED STEEL BEAM GUARDRAIL, TYPE 1
- (LL) ITEM 760507 - PROFILE MILLING, HOT-MIX
- (MM) ITEM 720656 - PCC SAFETY BARRIER PERMANENT, SINGLE FACE, MODIFIED, TYPE 3
- (NN) ITEM 720657 - PCC SAFETY BARRIER PERMANENT, SINGLE FACE, MODIFIED, TYPE 4
- (OO) ITEM 720651 - PCC SAFETY BARRIER PERMANENT, DOUBLE FACE, BIFURCATED, TYPE 1
- (PP) ITEM 720652 - PCC SAFETY BARRIER PERMANENT, DOUBLE FACE, BIFURCATED, TYPE 2
- (RR) ITEM 401668 - SUPERPAVE, TYPE C HOT-MIX, 160 GYRATIONS, PG 64-22, WEDGE
- (SS) ITEM 401669 - SUPERPAVE, TYPE B HOT-MIX, 160 GYRATIONS, PG 64-22, WEDGE

PAVEMENT LIFT NOTE:

THE MAXIMUM LIFTS FOR THE INDIVIDUAL PAVING MATERIAL ARE AS FOLLOWS:
SUPERPAVE, TYPE C HOT-MIX - 2"
SUPERPAVE, TYPE B HOT-MIX - 3"
SUPERPAVE, BIT. CONC. BASE COURSE - 6"
GRADED AGGREGATE BASE COURSE - 8"

NOTES:

1) THE PGA IS APPLIED TO THE TOP OF THE FINAL PAVEMENT SURFACE.

UNOFFICIAL WEBSITE COPY

DELAWARE DEPARTMENT OF TRANSPORTATION	ADDENDUMS / REVISIONS	NOT TO SCALE	SR1 / I-95 INTERCHANGE	CONTRACT 28-090-03	BRIDGE NO.	TYPICAL SECTIONS	SHEET NO. 47
	ADDENDUM NO. 3 CHANGED ITEM NO., 02/18/2011, RLS			COUNTY NEW CASTLE	DESIGNED BY:		TOTAL SHTS. 803
					CHECKED BY:		

2/15/2011 1:54:10 PM
M:\PROJECTS\2003\03059_DELTRNPK\SRIMALL\CADD\2809003\PLANS\TS43_SR1.DGN

UNOFFICIAL WEBSITE COPY

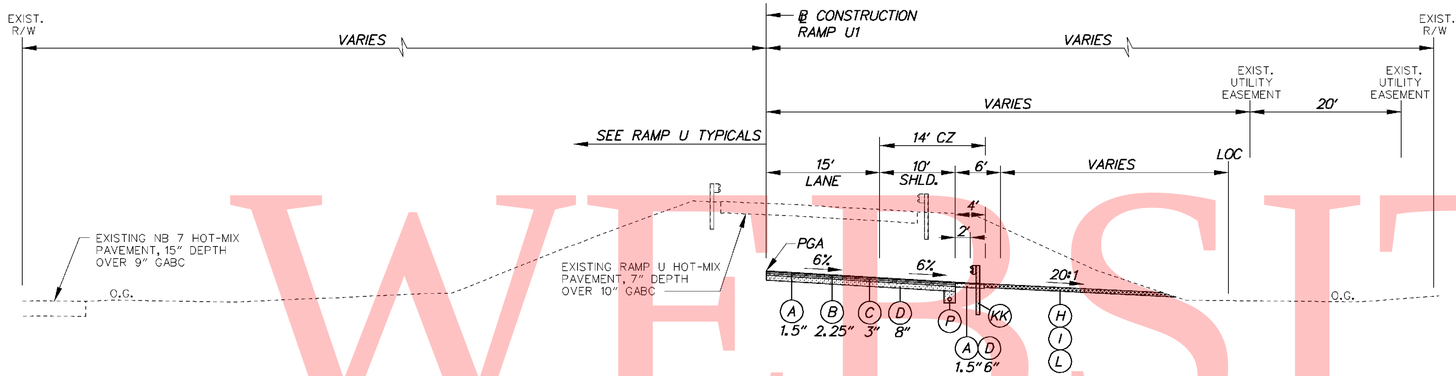

RAMP U1

STA. 835+81.89 TO STA. 836+65.79

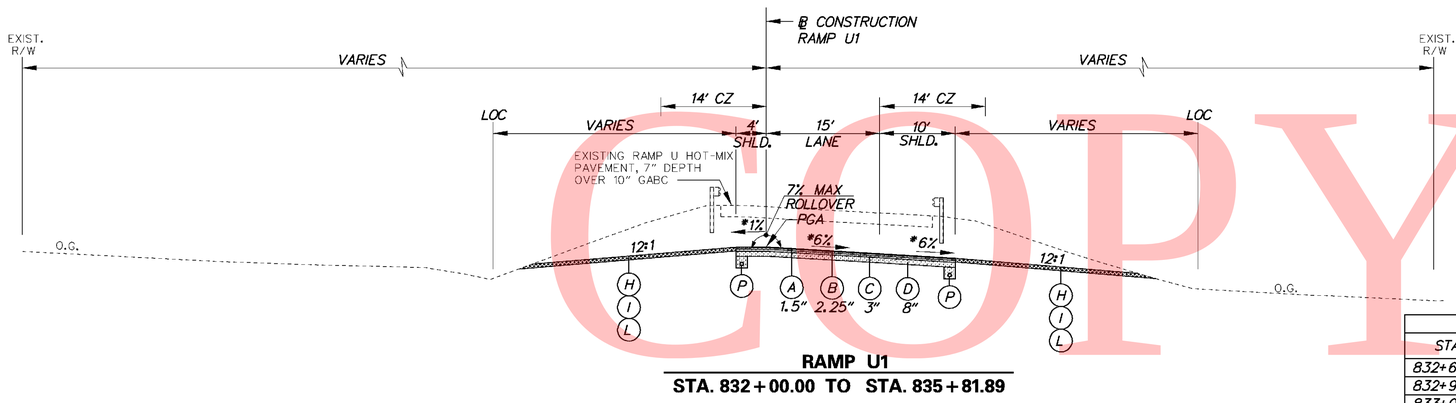

RAMP U1

STA. 832+00.00 TO STA. 835+81.89

*RAMP U1 CROSS-SLOPES			
STA.	LT. SHLD.	LANES	RT. SHLD.
832+69.18	-4.00%	-2.00%	-4.00%
832+90.68	-4.00%	-3.00%	-4.00%
833+00	-3.57%	-3.43%	-4.00%
833+12.18	-3.00%	-4.00%	-4.00%
833+50	-1.24%	-5.76%	-5.76%
833+55.18	-1.00%	-6.00%	-6.00%
835+57.89	-1.00%	-6.00%	-6.00%
835+81.89	2.00%	-6.00%	-6.00%

LEGEND

- (A) ITEM 401708 - SUPERPAVE, TYPE C HOT-MIX, 160 GYRATIONS, PG 70-22 (NON-CARBONATE STONE)
- (B) ITEM 401654 - SUPERPAVE, TYPE B HOT-MIX, 160 GYRATIONS, PG 70-22
- (C) ITEM 401663 - SUPERPAVE, BITUMINOUS CONCRETE BASE COURSE, 160 GYRATIONS, PG 64-22
- (D) ITEM 302007 - GRADED AGGREGATE BASE COURSE, TYPE B
- (E) ITEM 401711 - SUPERPAVE, TYPE C HOT-MIX, 160 GYRATIONS, PG 76-22 (NON-CARBONATE STONE)
- (F) ITEM 401660 - SUPERPAVE, TYPE B HOT-MIX, 160 GYRATIONS, PG 76-22
- (G) ITEM 501006 - PORTLAND CEMENT CONCRETE PAVEMENT, 12"
- (H) ITEM 732002 - TOPSOIL, 6" DEPTH
- (I) ITEM 734013 - PERMANENT GRASS SEEDING, DRY GROUND
- (J) ITEM 602017 - PCC MASONRY, PARAPET, CLASS A
- (K) ITEM 735533 - SOIL RETENTION BLANKET MULCH, TYPE 3
- (L) ITEM 735534 - SOIL RETENTION BLANKET MULCH, TYPE 4
- (M) ITEM 735535 - SOIL RETENTION BLANKET MULCH, TYPE 5, UNLESS OTHERWISE NOTED, SEE DRAINAGE PLANS FOR LIMITS AND TYPE
- (N) ITEM 209001 - BORROW, TYPE A
- (O) ITEM 209006 - BORROW, TYPE F OR APPROVED PROJECT EXCAVATION
- (P) ITEM 715001 - PERFORATED PIPE UNDERDRAINS, 6"
- (Q) ITEM 760504 - RUMBLE STRIPS, HOT-MIX
- (R) ITEM 602772 - MECHANICALLY STABILIZED EARTH WALLS
- (S) ITEM 602773 - PCC MASONRY FOR MECHANICALLY STABILIZED EARTH WALLS
- (T) ITEM ~~720512~~ 3 720529 - PCC SAFETY BARRIER PERMANENT, SINGLE FACE
- (U) ITEM 720654 - PCC SAFETY BARRIER PERMANENT, SINGLE FACE, MODIFIED TYPE 1
- (V) ITEM 720587 - PCC SAFETY BARRIER PERMANENT, DOUBLE FACE, MODIFIED
- (W) ITEM 720655 - PCC SAFETY BARRIER PERMANENT, SINGLE FACE, MODIFIED TYPE 2
- (X) ITEM 712005 - RIPRAP, R-4
- (Y) ITEM 401665 - SUPERPAVE, TYPE C HOT-MIX, 160 GYRATIONS, PG 64-22, PATCHING
- (Z) ITEM 401666 - SUPERPAVE, TYPE B HOT-MIX, 160 GYRATIONS, PG 64-22, PATCHING
- (AA) ITEM 401667 - SUPERPAVE, BITUMINOUS CONCRETE BASE COURSE, 160 GYRATIONS, PG 64-22, PATCHING
- (BB) ITEM 302008 - GRADED AGGREGATE BASE COURSE, TYPE B, PATCHING
- (CC) ITEM 755000 - HOT-MIX, HOT LAID, BITUMINOUS CONCRETE CURB
- (DD) ITEM 701010 - PORTLAND CEMENT CONCRETE CURB, TYPE 1
- (EE) ITEM 701011 - PORTLAND CEMENT CONCRETE CURB, TYPE 2
- (FF) ITEM 701020 - INTEGRAL PORTLAND CEMENT CONCRETE CURB AND GUTTER, TYPE 1
- (GG) ITEM 701023 - INTEGRAL PORTLAND CEMENT CONCRETE CURB AND GUTTER, TYPE 4
- (HH) ITEM 701026 - PORTLAND CEMENT CONCRETE MONOLITHIC MEDIAN
- (II) ITEM 701027 - PORTLAND CEMENT CONCRETE CURB, TYPE 1 MODIFIED
- (JJ) ITEM 720658 - PCC SAFETY BARRIER PERMANENT SINGLE FACE, MODIFIED, TYPE 5
- (KK) ITEM 720050 - GALVANIZED STEEL BEAM GUARDRAIL, TYPE 1
- (LL) ITEM 760507 - PROFILE MILLING, HOT-MIX
- (MM) ITEM 720656 - PCC SAFETY BARRIER PERMANENT, SINGLE FACE, MODIFIED, TYPE 3
- (NN) ITEM 720657 - PCC SAFETY BARRIER PERMANENT, SINGLE FACE, MODIFIED, TYPE 4
- (OO) ITEM 720651 - PCC SAFETY BARRIER PERMANENT, DOUBLE FACE, BIFURCATED, TYPE 1
- (PP) ITEM 720652 - PCC SAFETY BARRIER PERMANENT, DOUBLE FACE, BIFURCATED, TYPE 2
- (RR) ITEM 401668 - SUPERPAVE, TYPE C HOT-MIX, 160 GYRATIONS, PG 64-22, WEDGE
- (SS) ITEM 401669 - SUPERPAVE, TYPE B HOT-MIX, 160 GYRATIONS, PG 64-22, WEDGE

PAVEMENT LIFT NOTE:

THE MAXIMUM LIFTS FOR THE INDIVIDUAL PAVING MATERIAL ARE AS FOLLOWS:
SUPERPAVE, TYPE C HOT-MIX - 2"
SUPERPAVE, TYPE B HOT-MIX - 3"
SUPERPAVE, BIT. CONC. BASE COURSE - 6"
GRADED AGGREGATE BASE COURSE - 8"

NOTES:

1) THE PGA IS APPLIED TO THE TOP OF THE FINAL PAVEMENT SURFACE.

2/15/2011 1:55:26 PM
M:\PROJECTS\2003\03059_DELTRNPK\SRIMALL\CADD\2809003\PLANS\TS44_SR1.DGN

DELAWARE DEPARTMENT OF TRANSPORTATION

ADDENDUMS / REVISIONS	
ADDENDUM NO. 3 CHANGED ITEM NO.,	
02/18/2011, RLS	

NOT TO SCALE

SR1 / I-95 INTERCHANGE

CONTRACT	BRIDGE NO.	
28-090-03	DESIGNED BY:	
COUNTY	CHECKED BY:	
NEW CASTLE		

TYPICAL SECTIONS

SHEET NO.
48
TOTAL SHTS.
803

GUARDRAIL SCHEDULE

NO.	ITEM DESCRIPTION / TYPE	BEGIN STA.	OFFSET	LENGTH
4	GALVANIZED STEEL BEAM GUARDRAIL, TYPE 1	373+03.70	-79.00'	337.50'
	END ANCHORAGE	369+70.13	-79.00'	1 EA.
	MAINTENANCE PAVEMENT			150 S.Y.
5	GUARDRAIL TO BARRIER CONNECTION (EXIT TYPE)	598+95.64	36.00'	1 EA.
	GALVANIZED STEEL BEAM GUARDRAIL, TYPE 1	599+09.89	36.00'	512.50'
	END ANCHORAGE	604+22.39	36.00'	1 EA.
	MAINTENANCE PAVEMENT			232 S.Y.
41	TREATED WOOD BLOCK	367+00	RT.	95 EA.
42	TREATED WOOD BLOCK	373+00	LT.	9 EA.
43	TREATED WOOD BLOCK	1284+50	RT.	18 EA.

NOTES: ALL BEGINNING STATIONS ARE APPROXIMATE. EXACT LOCATIONS ARE TO BE DETERMINED BY THE ENGINEER IN THE FIELD.
A = OFFSET ATTENUATORS AS PER STANDARD DETAILS.

BARRIER SCHEDULE

NO.	ITEM DESCRIPTION / TYPE	LENGTH
2	DOUBLE FACE, BIFURCATED TYPE 1 (720651)	566'
3	SINGLE FACE ~~(720512)~~ (720529)	399'
4	SINGLE FACE, MODIFIED TYPE 2 (720655)	374'

△3

LIMIT OF CONSTRUCTION
CONTRACT 28-090-03
STATION 1286+11.18

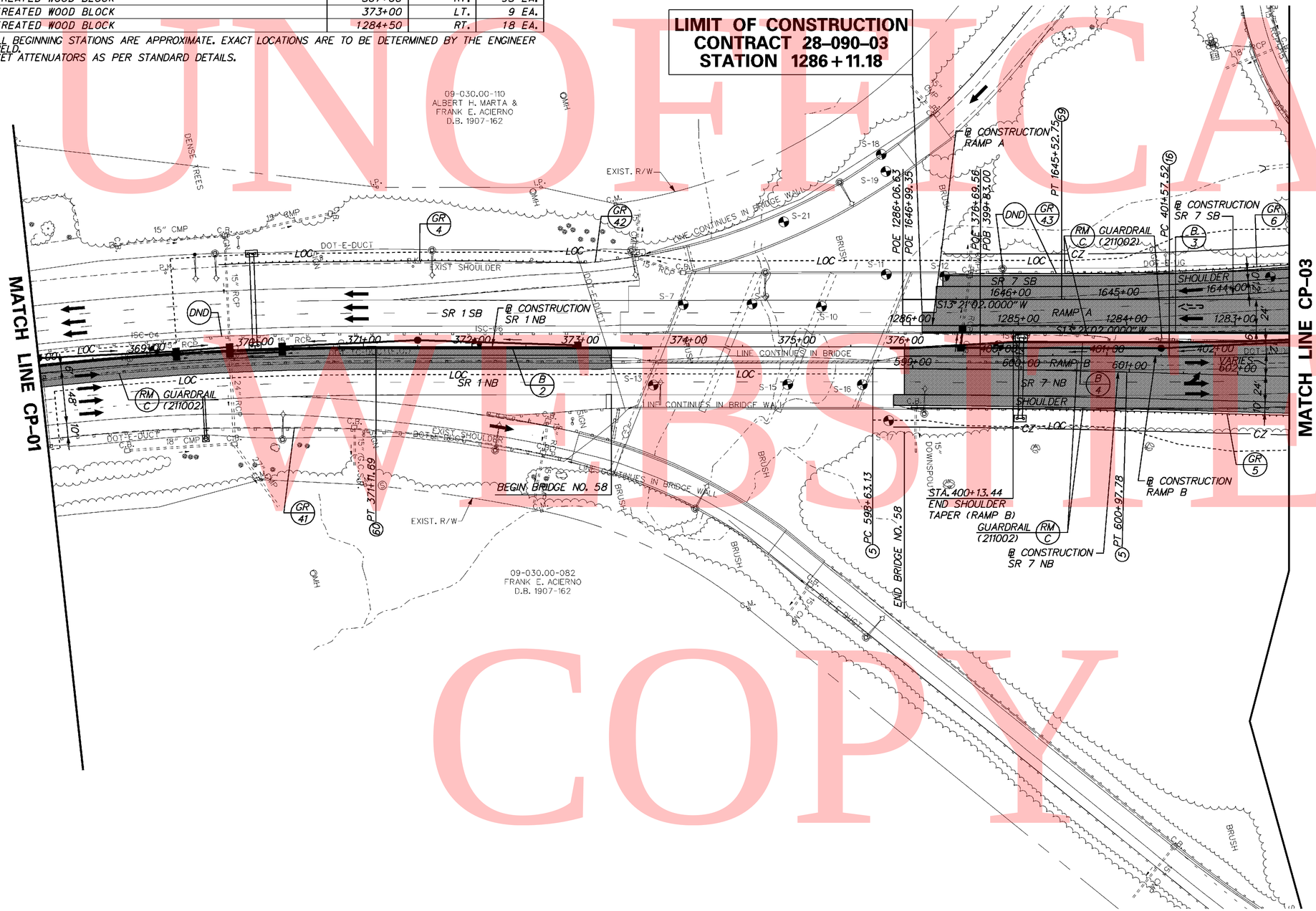

NOTES:

1. SEE LIGHTING PLANS FOR EXISTING LIGHTS AND JUNCTION WELLS TO BE REMOVED.
2. SEE DRAINAGE PLANS FOR PROPOSED PIPE AND DRAINAGE STRUCTURE SCHEDULES AND DITCH GRADING.

UNOFFICIAL WEBSITE COPY

2/15/2011 12:49:00 PM
M:\PROJECTS\2003\03059_DELTRNPK\SRIMALL\CADD\2809003\PLANS\CP02_SR1.DGN

DELAWARE DEPARTMENT OF TRANSPORTATION	ADDENDUMS / REVISIONS ADDENDUM NO. △3 CHANGED ITEM NO., 02/18/2011, RLS	SCALE 0 50 100 150 FEET	**SR1 / I-95 INTERCHANGE**	CONTRACT 28-090-03 COUNTY NEW CASTLE	BRIDGE NO. DESIGNED BY: CHECKED BY:	**CONSTRUCTION PLAN**	CP-02 SHEET NO. 63 TOTAL SHTS. 803

UNOFFICAL
WEBSITE
COPY

GUARDRAIL SCHEDULE

NO.	ITEM DESCRIPTION / TYPE	BEGIN STA.	OFFSET	LENGTH
6	GUARDRAIL END TREATMENT ATTENUATOR, TYPE 1	1641+75.00	A	1 EA.
	GALVANIZED STEEL BEAM GUARDRAIL, TYPE 1	1642+25.00	24.00'	312.50'
	END ANCHORAGE	1645+37.50	24.00'	1 EA.
	MAINTENANCE PAVEMENT			139 S.Y.
7	GUARDRAIL END TREATMENT ATTENUATOR, TYPE 1	1413+27.50	A	1 EA.
	GALVANIZED STEEL BEAM GUARDRAIL, TYPE 1	1413+77.50	-4.00'	62.50'
	MAINTENANCE PAVEMENT			28 S.Y.
8	GALVANIZED STEEL BEAM GUARDRAIL, TYPE 1	212+25.09	-6.00'	212.50'
	END ANCHORAGE	214+37.59	-6.00'	1 EA.
	MAINTENANCE PAVEMENT			95 S.Y.
9	GALVANIZED STEEL BEAM GUARDRAIL, TYPE 1	212+69.81	25.00'	62.50'
	END ANCHORAGE	213+32.31	25.00'	1 EA.
	MAINTENANCE PAVEMENT			28 S.Y.
10	GUARDRAIL END TREATMENT ATTENUATOR, TYPE 1	1411+65.00	A	1 EA.
	GALVANIZED STEEL BEAM GUARDRAIL, TYPE 1	1412+15.00	25.00'	225.00'
	MAINTENANCE PAVEMENT			100 S.Y.
11	GUARDRAIL END TREATMENT ATTENUATOR, TYPE 1	1632+95.00	A	1 EA.
	GALVANIZED STEEL BEAM GUARDRAIL, TYPE 1	1633+45.00	36.00'	250.00'
	END ANCHORAGE	1635+99.60	36.00'	1 EA.
	MAINTENANCE PAVEMENT			111 S.Y.
12	GUARDRAIL END TREATMENT ATTENUATOR, TYPE 1	835+95.93	A	1 EA.
	GUARDRAIL TO BARRIER CONNECTION (EXIT TYPE)	836+45.93	27.00'	1 EA.
	MAINTENANCE PAVEMENT			5 S.Y.
13	GUARDRAIL END TREATMENT ATTENUATOR, TYPE 1	736+87.30	A	1 EA.
	GUARDRAIL TO BARRIER CONNECTION (EXIT TYPE)	736+60.30	6.00'	1 EA.
	MAINTENANCE PAVEMENT			5 S.Y.
14	GUARDRAIL END TREATMENT ATTENUATOR, TYPE 1	217+54.27	A	1 EA.
	GUARDRAIL TO BARRIER CONNECTION, APPROACH TYPE 1	218+04.27	17.00'	1 EA.
	MAINTENANCE PAVEMENT			9 S.Y.
△3 56	IMPACT ATTENUATOR, SPECIAL	B	30.00'	1 EA.

NOTES: ALL BEGINNING STATIONS ARE APPROXIMATE. EXACT LOCATIONS ARE TO BE DETERMINED BY THE ENGINEER IN THE FIELD.
A = OFFSET ATTENUATORS AS PER STANDARD DETAILS.
△3 B = ATTACH TO P.C.C. BARRIER.

UNOFFICAL WEBSITE COPY

3/1/2011 3:02:37 PM
M:\PROJECTS\2003\03059_DELTRNPK\SRIMALL\CADD\2809003\PLANS\CP03A_SR1.DGN

DELAWARE
DEPARTMENT OF TRANSPORTATION

ADDENDUMS / REVISIONS	
ADDENDUM NO. △3 UPDATED SCHEDULE, 02/18/2011, RLS	

NOT TO SCALE

SR1 / I-95 INTERCHANGE

CONTRACT	28-090-03
COUNTY	NEW CASTLE
BRIDGE NO.	
DESIGNED BY:	
CHECKED BY:	

CONSTRUCTION PLAN

CP-03A	
SHEET NO.	65
TOTAL SHTS.	803

UNOFFICAL
WEBSITE
COPY

UNOFFICAL
WEBSITE
COPY

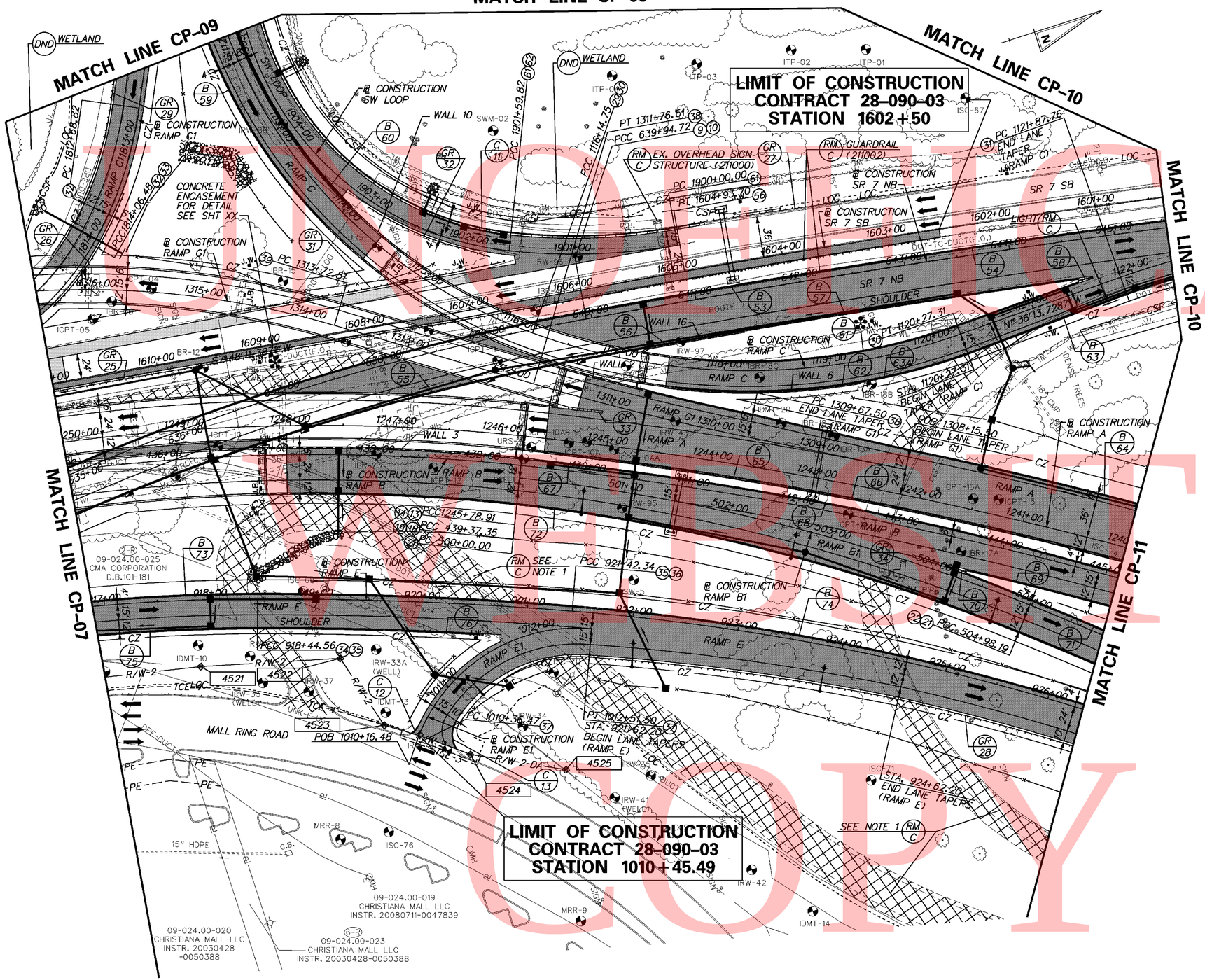

RIGHT-OF-WAY MONUMENT SCHEDULE				
NO.	STATION	OFFSET	NORTHING	EASTING
4521	1249+00.00	-224.00	612151.1818	432538.8978
4522	1247+50.00	-220.00	612278.9481	432572.1575
4523	1247+00.00	-282.14	612299.0397	432645.1257
4524	1246+01.54	-304.30	612367.8029	432696.3659
4525	1245+02.18	-308.50	612447.3999	432736.9828

CURB SCHEDULE		
NO.	ITEM DESCRIPTION / TYPE	LENGTH
11	INT. PCC CURB AND GUTTER, TYPE 4 (701023)	1,029'
12	PCC CURB, TYPE 1 (701010)	10'
13	PCC CURB, TYPE 1 (701010)	29'

BARRIER SCHEDULE			
	NO.	ITEM DESCRIPTION / TYPE	LENGTH
	53	SINGLE FACE, MODIFIED TYPE 2 (720655)	817'
3	54	SINGLE FACE ~~(720512)~~ (720529)	250'
	55	SINGLE FACE, MODIFIED TYPE 2 (720655)	565'
	56	SINGLE FACE, MODIFIED TYPE 1 (720654)	92'
	57	SINGLE FACE, MODIFIED TYPE 2 (720655)	320'
	58	DOUBLE FACE, BIFURCATED TYPE 1 (720651)	14'
3	59	SINGLE FACE ~~(720512)~~ (720529)	205'
	60	SINGLE FACE, MODIFIED TYPE 1 (720654)	200'
3	61	SINGLE FACE ~~(720512)~~ (720529)	375'
	62	SINGLE FACE, MODIFIED TYPE 1 (720654)	184'
3	63	SINGLE FACE ~~(720512)~~ (720529)	274'
	63A	SINGLE FACE, MODIFIED TYPE 3 (720656)	40'
3	64	SINGLE FACE ~~(720512)~~ (720529)	470'
3	65	SINGLE FACE ~~(720512)~~ (720529)	208'
	66	SINGLE FACE, MODIFIED TYPE 2 (720655)	349'
	67	SINGLE FACE, MODIFIED TYPE 2 (720655)	208'
3	68	SINGLE FACE ~~(720512)~~ (720529)	353'
3	69	SINGLE FACE ~~(720512)~~ (720529)	140'
	70	DOUBLE FACE, BIFURCATED TYPE 1 (720651)	21'
3	71	SINGLE FACE ~~(720512)~~ (720529)	141'
3	72	SINGLE FACE ~~(720512)~~ (720529)	750'
	73	SINGLE FACE, MODIFIED TYPE 2 (720655)	252'
3	74	SINGLE FACE ~~(720512)~~ (720529)	696'
	75	SINGLE FACE, MODIFIED TYPE 2 (720655)	281'
3	76	SINGLE FACE ~~(720512)~~ (720529)	84'

NOTES

1. REMOVE EXISTING PAVEMENT BACKFILL, TOPSOIL, SEED & MULCH.
2. SEE LIGHTING PLANS FOR EXISTING LIGHTS AND JUNCTION WELLS TO BE REMOVED.
3. SEE DRAINAGE PLANS FOR PIPE AND DRAINAGE STRUCTURE SCHEDULES AND DITCH GRADING.

UNOFFICIAL WEB COPY

DELAWARE
DEPARTMENT OF TRANSPORTATION

ADDENDUMS / REVISIONS	
ADDENDUM NO. 3 CHANGED ITEM NO., 02/18/2011, RLS	

SCALE 0 50 100 150 FEET

SR1 / I-95 INTERCHANGE

CONTRACT	BRIDGE NO.	
28-090-03	DESIGNED BY:	
COUNTY	CHECKED BY:	
NEW CASTLE		

CONSTRUCTION PLAN

CP-08
SHEET NO. 71
TOTAL SHTS. 803

2/16/2011 2:52:58 PM
M:\PROJECTS\2003\03059_DELTRNPK\SR1MALL\CADD\2809003\PLANS\CP08_SR1.DGN

UNOFFICIAL WEBSITE COPY

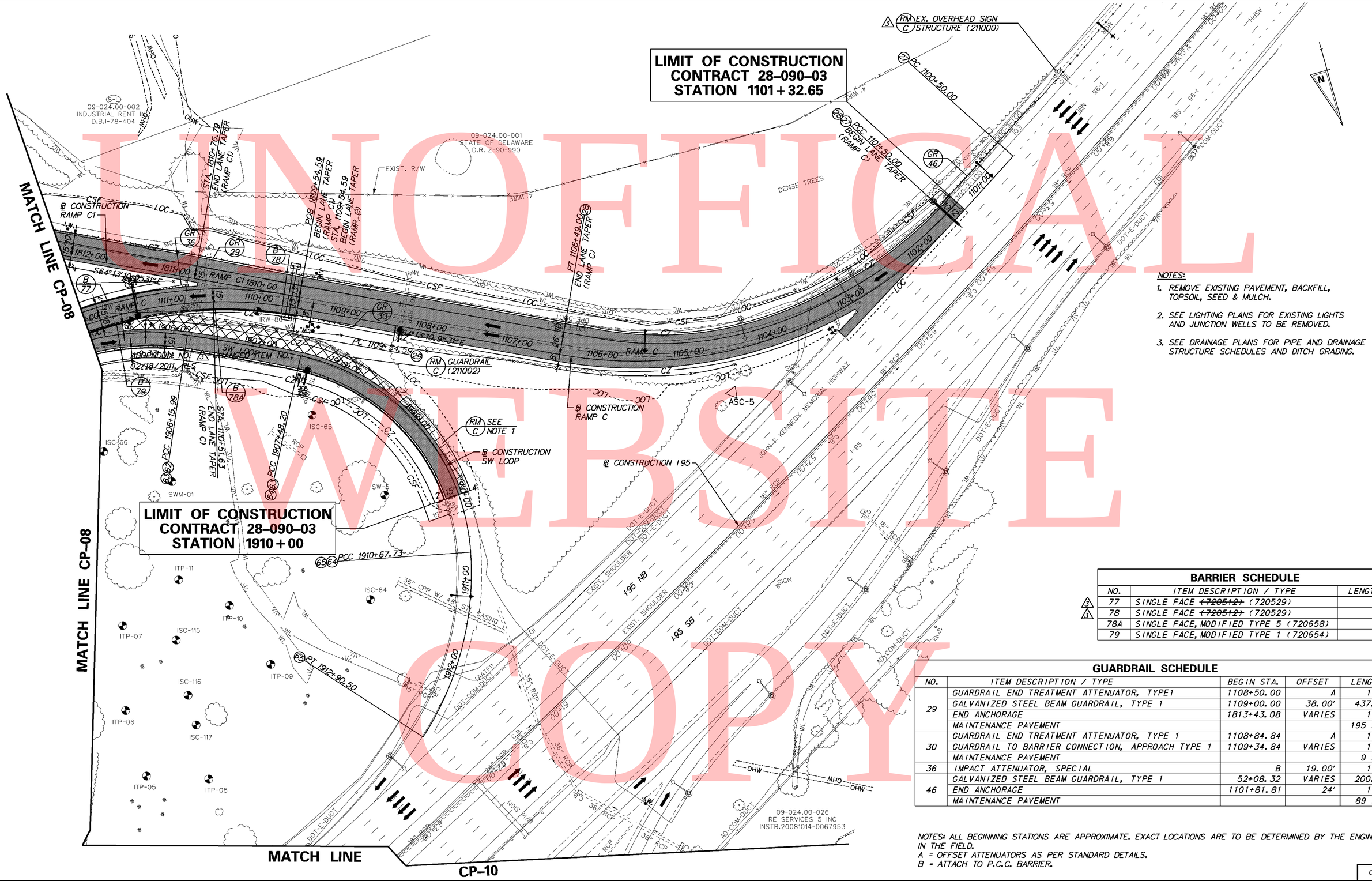

NOTES:

1. REMOVE EXISTING PAVEMENT, BACKFILL, TOPSOIL, SEED & MULCH.
2. SEE LIGHTING PLANS FOR EXISTING LIGHTS AND JUNCTION WELLS TO BE REMOVED.
3. SEE DRAINAGE PLANS FOR PIPE AND DRAINAGE STRUCTURE SCHEDULES AND DITCH GRADING.

BARRIER SCHEDULE

NO.	ITEM DESCRIPTION / TYPE	LENGTH
3 77	SINGLE FACE ~~(720512)~~ (720529)	95′
3 78	SINGLE FACE ~~(720512)~~ (720529)	90′
78A	SINGLE FACE, MODIFIED TYPE 5 (720658)	30′
79	SINGLE FACE, MODIFIED TYPE 1 (720654)	53′

GUARDRAIL SCHEDULE

NO.	ITEM DESCRIPTION / TYPE	BEGIN STA.	OFFSET	LENGTH
29	GUARDRAIL END TREATMENT ATTENUATOR, TYPE1	1108+50.00	A	1 EA.
	GALVANIZED STEEL BEAM GUARDRAIL, TYPE 1	1109+00.00	38.00′	437.50′
	END ANCHORAGE	1813+43.08	VARIES	1 EA.
	MAINTENANCE PAVEMENT			195 S.Y.
30	GUARDRAIL END TREATMENT ATTENUATOR, TYPE 1	1108+84.84	A	1 EA.
	GUARDRAIL TO BARRIER CONNECTION, APPROACH TYPE 1	1109+34.84	VARIES	1 EA.
	MAINTENANCE PAVEMENT			9 S.Y.
36	IMPACT ATTENUATOR, SPECIAL	B	19.00′	1 EA.
46	GALVANIZED STEEL BEAM GUARDRAIL, TYPE 1	52+08.32	VARIES	200.00′
	END ANCHORAGE	1101+81.81	24′	1 EA.
	MAINTENANCE PAVEMENT			89 S.Y.

NOTES: ALL BEGINNING STATIONS ARE APPROXIMATE. EXACT LOCATIONS ARE TO BE DETERMINED BY THE ENGINEER IN THE FIELD.
A = OFFSET ATTENUATORS AS PER STANDARD DETAILS.
B = ATTACH TO P.C.C. BARRIER.

3/1/2011 11:34:23 PM
M:\projects\2003\03059_deltrnok\SR1Mail\Cadd\2809003\Plans\ca09_sr1.dgn

DELAWARE
DEPARTMENT OF TRANSPORTATION

ADDENDUMS / REVISIONS	
ADDENDUM NO. 3 CHANGED ITEM NO.,	
ADDED O.H. SIGN REMOVAL, 02/18/2011	
RLS	

SCALE
0 50 100 150
FEET

SR1 / I–95 INTERCHANGE

CONTRACT	28-090-03	BRIDGE NO.
COUNTY	NEW CASTLE	DESIGNED BY:
		CHECKED BY:

CONSTRUCTION PLAN

	CP-09
SHEET NO.	73
TOTAL SHTS.	803

BARRIER SCHEDULE		
NO.	ITEM DESCRIPTION / TYPE	LENGTH
80	SINGLE FACE ~~(720512)~~ (720529)	150'
81	SINGLE FACE ~~(720512)~~ (720529)	115'
82	SINGLE FACE, MODIFIED TYPE 2 (720655)	35'

GUARDRAIL SCHEDULE				
NO.	ITEM DESCRIPTION / TYPE	BEGIN STA.	OFFSET	LENGTH
47	GUARDRAIL TO BARRIER CONNECTION, EXIT TYPE	647+00	-6.00'	1 EA.
	MAINTENANCE PAVEMENT			5 S.Y.
	TREATED WOOD BLOCKS			89 EA.

NOTES: ALL BEGINNING STATIONS ARE APPROXIMATE. EXACT LOCATIONS ARE TO BE DETERMINED BY THE ENGINEER IN THE FIELD.
A = OFFSET ATTENUATORS AS PER STANDARD DETAILS.
B = ATTACH TO P.C.C. BARRIER.

NOTES:

1. REMOVE EXISTING PAVEMENT, SEE REFORESTATION PLAN.
2. SEE LIGHTING PLANS FOR EXISTING LIGHTS AND JUNCTION WELLS TO BE REMOVED.
3. SEE DRAINAGE PLANS FOR PIPE AND DRAINAGE STRUCTURES AND DITCH GRADING.

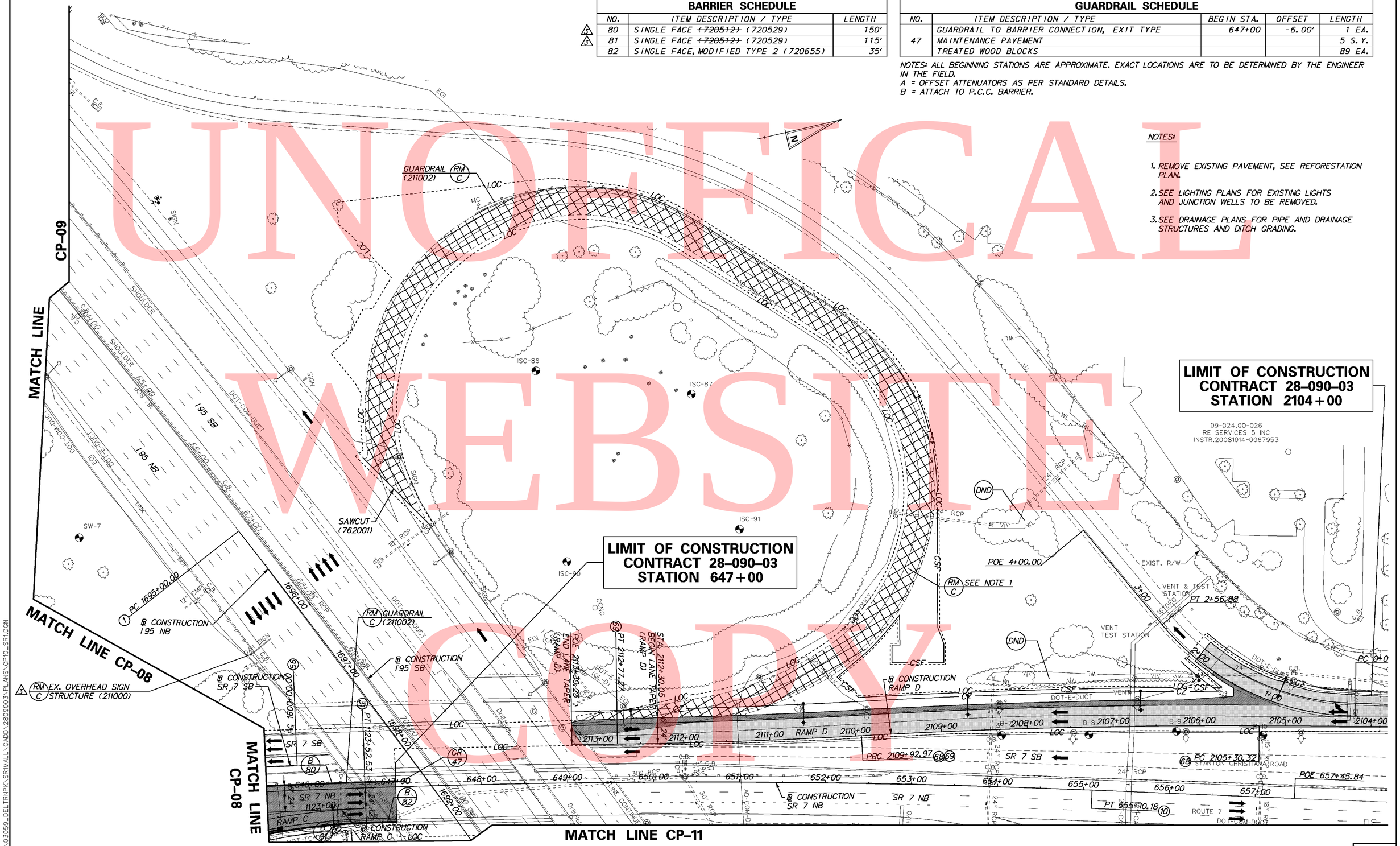

UNOFFICIAL WEBSITE COPY

DELAWARE DEPARTMENT OF TRANSPORTATION	ADDENDUMS / REVISIONS ADDENDUM NO. 3 CHANGED ITEM NO., ADDED O.H. SIGN REMOVAL, 02/18/2011 RLS	SCALE 0 50 100 150 FEET	SR1 / I-95 INTERCHANGE	CONTRACT 28-090-03 COUNTY NEW CASTLE	BRIDGE NO. DESIGNED BY: CHECKED BY:	CONSTRUCTION PLAN

CP-10
SHEET NO. 74
TOTAL SHTS. 803

3/1/2011 1:38:52 PM
M:\PROJECTS\2003\03059_DELTRNPK\SR1MALL\CADD\2809003\PLANS\CP10_SR1.DGN

RIGHT-OF-WAY MONUMENT SCHEDULE				
NO.	STATION	OFFSET	NORTHING	EASTING
4550	511+89.40	111.79	613300.5981	433291.3473
4551	514+00.00	85.00	613439.3678	433442.7909
4552	516+82.88	85.00	613577.9815	433680.0219

BARRIER SCHEDULE		
NO.	ITEM DESCRIPTION / TYPE	LENGTH
83	DOUBLE FACE, BIFURCATED TYPE 1(720651)	418'
84	SINGLE FACE, MODIFIED TYPE 2 (720655)	742'
85	SINGLE FACE ~~(720512)~~ (720529)	218'
86	SINGLE FACE, MODIFIED TYPE 2 (720655)	531'
87	SINGLE FACE ~~(720512)~~ (720529)	215'
88	SINGLE FACE ~~(720512)~~ (720529)	126'
89	SINGLE FACE ~~(720512)~~ (720529)	1,095'
90	SINGLE FACE ~~(720512)~~ (720529)	309'
91	SINGLE FACE, MODIFIED TYPE 2 (720655)	50'
92	SINGLE FACE ~~(720512)~~ (720529)	337'
93	SINGLE FACE, MODIFIED TYPE 2 (720655)	410'
94	SINGLE FACE ~~(720512)~~ (720529)	485'
95	SINGLE FACE ~~(720512)~~ (720529)	1,180'
96	SINGLE FACE ~~(720512)~~ (720529)	427'
97	DOUBLE FACE, BIFURCATED TYPE 1(720651)	29'
98	SINGLE FACE ~~(720512)~~ (720529)	216'
99	SINGLE FACE, MODIFIED TYPE 2 (720655)	204'
100	SINGLE FACE ~~(720512)~~ (720529)	288'

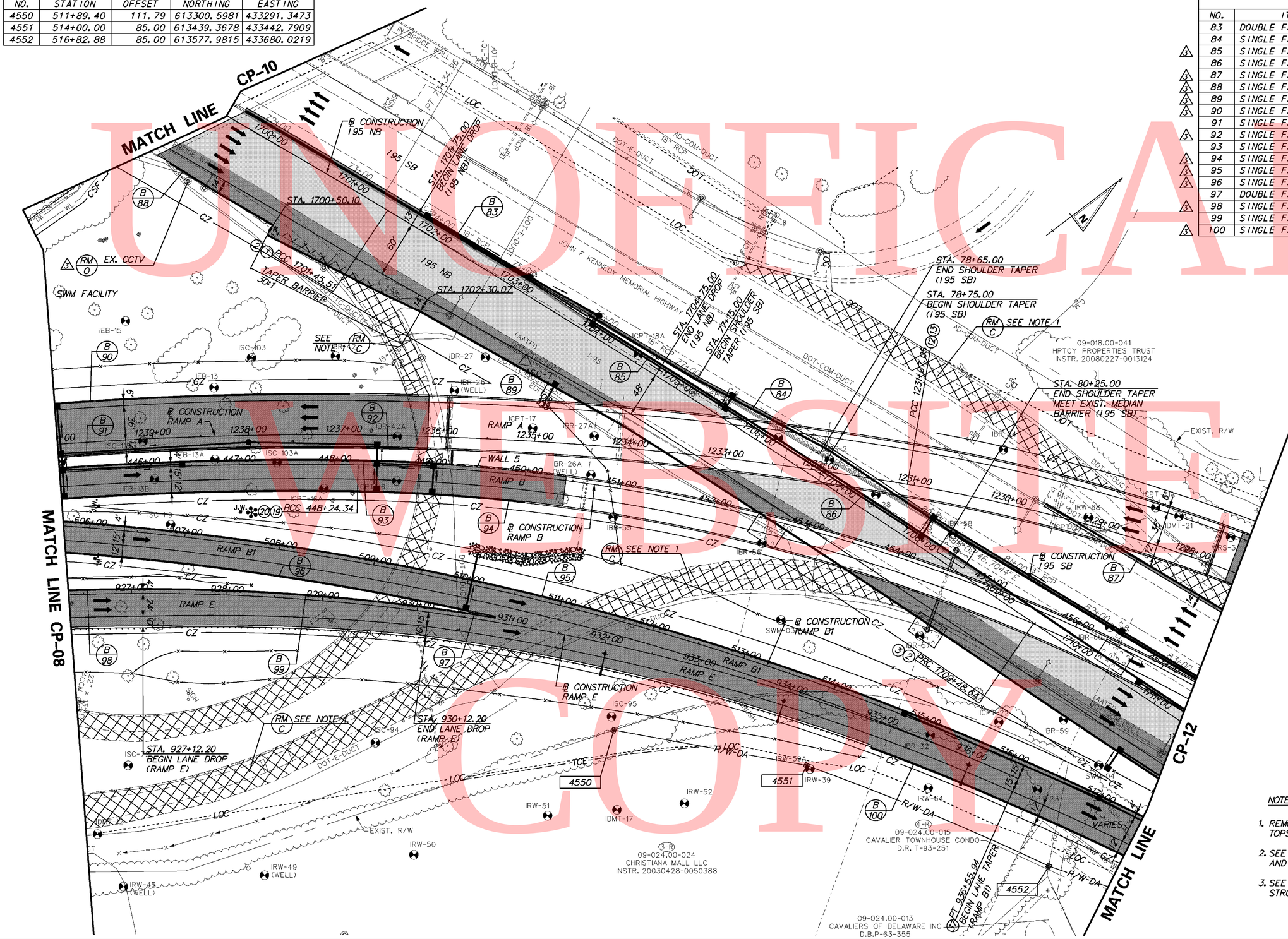

NOTES:

1. REMOVE EXISTING PAVEMENT, BACKFILL, TOPSOIL, SEED & MULCH.
2. SEE LIGHTING PLANS FOR EXISTING LIGHTS AND JUNCTION WELLS TO BE REMOVED.
3. SEE DRAINAGE PLANS FOR PIPE AND DRAINAGE STRUCTURE SCHEDULES AND DITCH GRADING.

UNOFFICIAL WEBSITE COPY

DELAWARE DEPARTMENT OF TRANSPORTATION

ADDENDUMS / REVISIONS
ADDENDUM NO. 3 CHANGED ITEM NO.,
ADDED CCTV REMOVAL, 02/18/2011, RLS

SCALE 0 50 100 150 FEET

SR1 / I-95 INTERCHANGE

CONTRACT	BRIDGE NO.	CONSTRUCTION PLAN	CP-11
28-090-03	DESIGNED BY:		SHEET NO. 75
COUNTY NEW CASTLE	CHECKED BY:		TOTAL SHTS. 803

3/1/2011 1:40:31 PM
M:\projects\2003\03059_deltrnpk\SR1Mall\Cadd\2809003\Plans\cp11_sr1.dgn

UNOFFICAL
WEBSITE
COPY

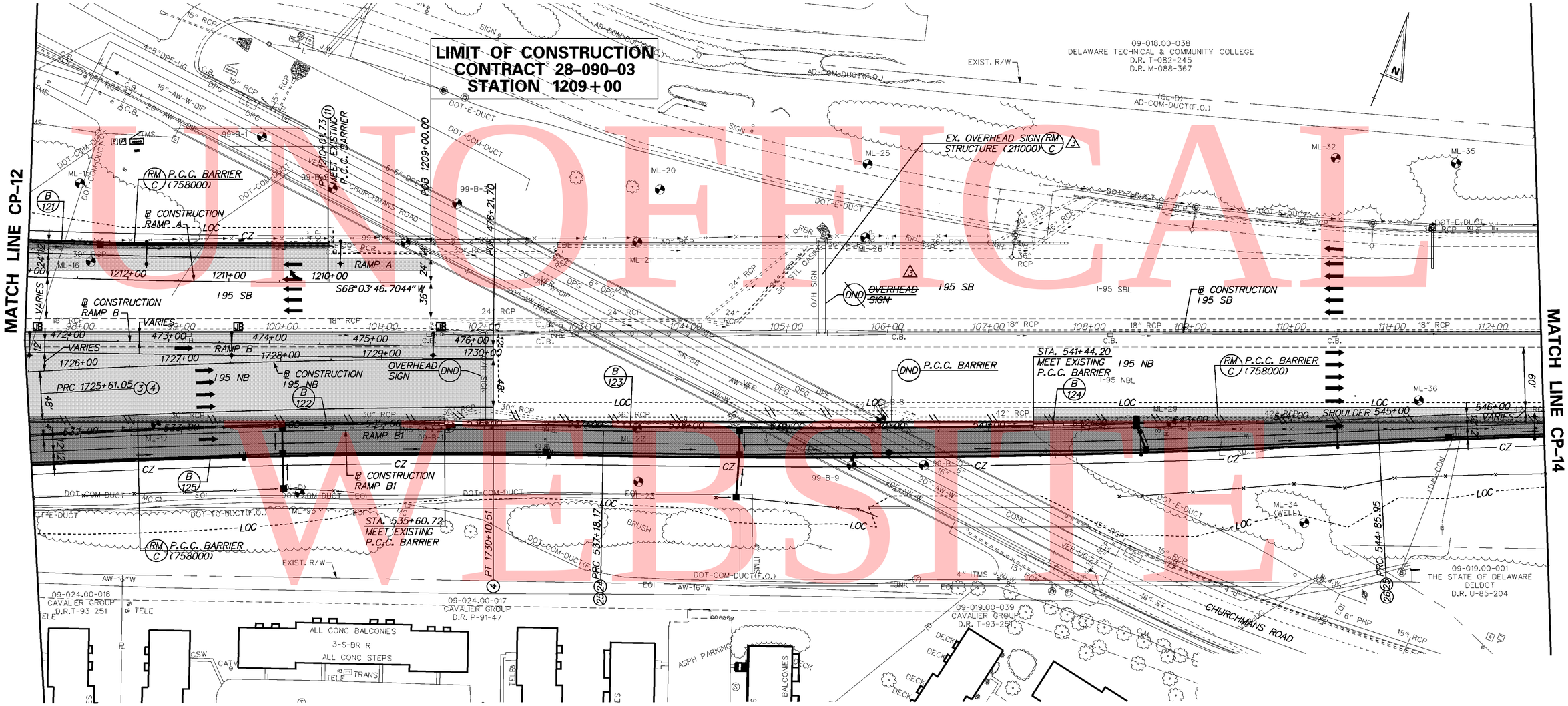

UNOFFICIAL WEBSITE COPY

BARRIER SCHEDULE

NO.	ITEM DESCRIPTION / TYPE	LENGTH
121	SINGLE FACE, MODIFIED TYPE 2 (720655)	297'
122	DOUBLE FACE, BIFURCATED TYPE 1(720651)	411'
123	SINGLE FACE, MODIFIED TYPE 2 (720655)	584'
124	DOUBLE FACE, BIFURCATED TYPE 1(720651)	110'
125	SINGLE FACE, MODIFIED TYPE 2 (720655)	1,500'

NOTES:

1. SEE LIGHTING PLANS FOR EXISTING LIGHTS AND JUNCTION WELLS TO BE REMOVED.
2. SEE DRAINAGE PLANS FOR PIPE AND DRAINAGE STRUCTURE SCHEDULES AND DITCH GRADING.

3/1/2011 11:42:26 PM
M:\PROJECTS\2003\03059_DELTRNPK\SRIMALL\CADD\2809003\PLANS\CP13_SR1.DGN

DELAWARE DEPARTMENT OF TRANSPORTATION

ADDENDUMS / REVISIONS	
ADDENDUM NO. 3 CHANGED ITEM NO.,	
ADDED O.H. SIGN REMOVAL, 02/18/2011	
RLS	

SCALE 0 50 100 150 FEET

SR1 / I-95 INTERCHANGE

CONTRACT 28-090-03	BRIDGE NO.	
COUNTY NEW CASTLE	DESIGNED BY:	
	CHECKED BY:	

CONSTRUCTION PLAN

	CP-13
SHEET NO.	77
TOTAL SHTS.	803

UNOFFICIAL WEBSITE COPY

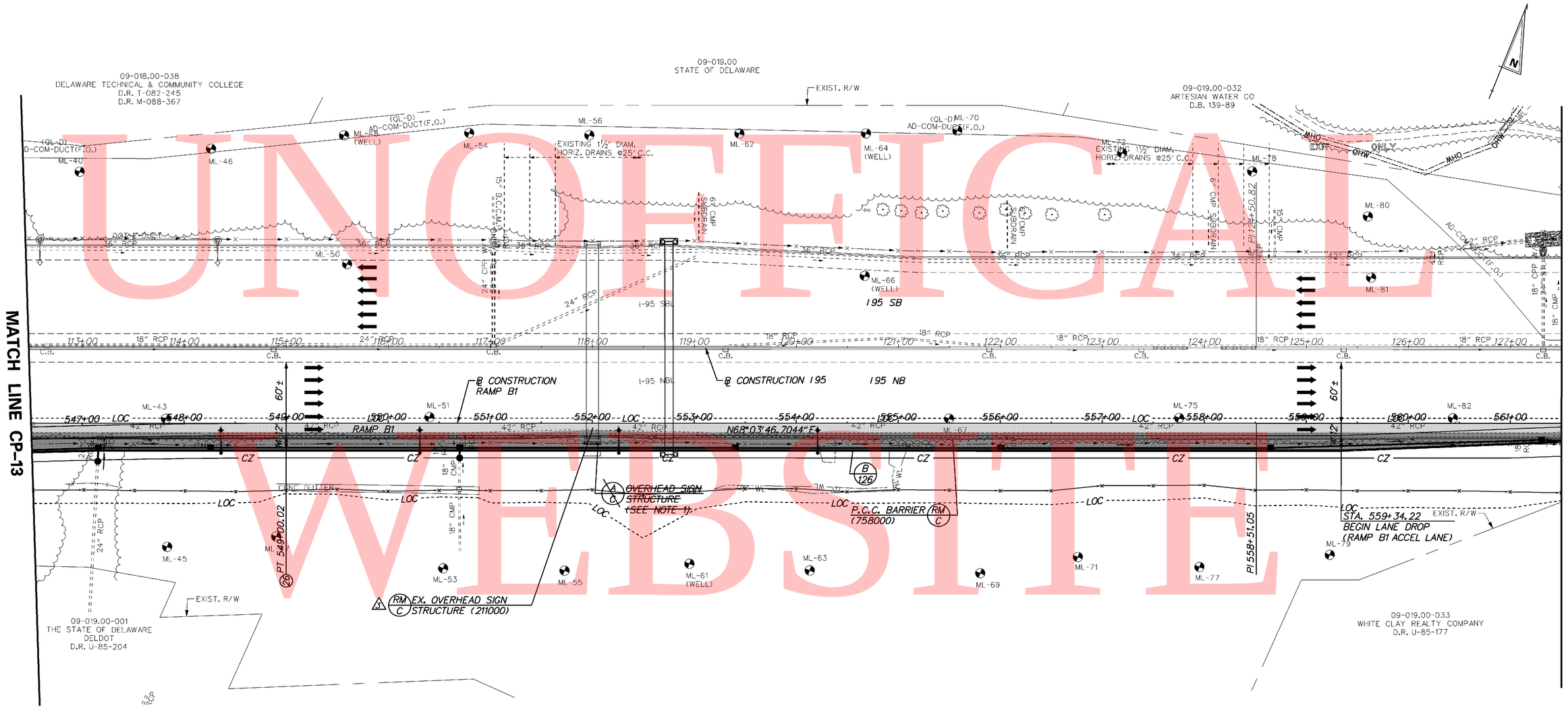

NOTES

3 ~~1. MODIFY EXISTING OVERHEAD SIGN STRUCTURE. SEE DETAIL SHEET XX.~~

2. SEE LIGHTING PLANS FOR EXISTING LIGHTS AND JUNCTION WELLS TO BE REMOVED.

3. SEE DRAINAGE PLANS FOR PIPE AND DRAINAGE STRUCTURE SCHEDULES AND DITCH GRADING.

BARRIER SCHEDULE

NO.	ITEM DESCRIPTION / TYPE	LENGTH
126	SINGLE FACE, MODIFIED TYPE 2 (720655)	1,500'

DELAWARE DEPARTMENT OF TRANSPORTATION

ADDENDUMS / REVISIONS

ADDENDUM NO. 3 CHANGED ITEM NO.,	
ADDED O.H. SIGN REMOVAL, 02/18/2011	
RLS	

SCALE 0 50 100 150 FEET

SR1 / I-95 INTERCHANGE

CONTRACT	28-090-03
COUNTY	NEW CASTLE
BRIDGE NO.	
DESIGNED BY:	
CHECKED BY:	

CONSTRUCTION PLAN

CP-14	
SHEET NO.	78
TOTAL SHTS.	803

3/1/2011 1:43:52 PM
M:\projects\2003\03059_deltrnpk\SR1Mail\Cadd\2809003\Plans\cp14_sr1.dgn

DRAINAGE PIPE SCHEDULE

NO.	SIZE / TYPE	CLASS	LENGTH	SLOPE	INT. EL.	DIS. EL.
40	24" RCP	IV	139.80	0.0050	75.10	74.40
41	24" RCP	IV	129.50	0.0060	68.00	67.20
204	24" RCP	IV	293.80	0.0020	72.80	72.10
205	24" RCP	IV	291.00	0.0040	71.90	70.70
206	24" RCP	IV	35.70	0.0200	70.30	69.60
208	18" RCP	IV	33.50	0.0150	80.60	80.10
209	18" RCP	IV	293.00	0.0200	79.60	73.75
210	18" RCP	IV	290.80	0.0130	73.30	69.60
211	30" RCP	IV	22.10	0.0090	66.10	65.90
212	24" RCP	IV	141.10	0.0120	68.60	66.90
213	36" RCP	IV	228.00	0.0070	65.70	64.00
214	18" RCP	IV	25.00	0.0080	64.90	64.70
215	36" RCP	IV	228.00	0.0080	63.10	61.25
216	36" RCP	IV	252.20	0.0100	60.70	58.20
237	24" RCP	IV	215.00	0.0090	74.00	72.10
238	24" RCP	IV	241.00	0.0100	71.70	69.25
239	24" RCP	IV	32.40*	0.0090*	66.79*	66.60
240	15" RCP	IV	249.60	0.0060	68.00	66.60
241	18" RCP	IV	121.10	0.0030	66.40	66.00
242	18" RCP	IV	31.00*	0.0050*	65.80	65.63*
244	18" RCP	IV	6.40	0.0160	66.70	66.60
245	18" RCP	IV	37.60	0.0050	77.40	77.20
246	18" RCP	V	26.40	0.0060	75.90	75.75
247	18" RCP	V	24.40	0.0060	73.15	73.00
249	18" RCP	IV	229.00	0.0090	68.80	66.70
256	15" RCP	IV	126.30	0.0570	104.40	97.20
257	15" RCP	IV	133.20	0.0410	97.00	91.50
258	18" RCP	IV	269.30	0.0040	79.00	77.90
260	18" RCP	IV	13.20	0.0380	86.00	85.50
262	18" RCP	IV	16.10	0.0120	77.70	77.50
264	18" RCP	IV	15.50	0.0100	71.30	71.15
265	24" RCP	IV	17.10	0.0060	70.95	70.85
266	24" RCP	IV	45.70	0.0050	70.65	70.40
267	18" RCP	IV	4.50	0.0110	68.55	68.50
268	18" RCP	IV	43.50	0.0070	68.50	68.20
269	24" RCP	IV	287.30	0.0080	66.70	64.40
276	30" RCP	IV	163.20	0.0130	63.80	61.75
297	24" RCP	IV	210.00	0.0070	77.00	75.50
298	18" RCP	V	226.70	0.0100	72.60	70.40
351	18" RCP	V	214.50	0.0120	75.55	73.00
352	18" RCP	IV	260.70	0.0380	106.94	96.92
401	18" RCP	IV	48.00	0.0630	94.50	91.50
402	24" RCP	IV	188.10	0.0070	70.20	68.80
403	24" RCP	IV	80.00	0.0050	68.60	68.20
404	18" RCP	IV	13.80	0.0140	73.50	73.30

DRAINAGE INLET SCHEDULE

NO.	STATION	OFFSET	BOX SIZE / TOP	GRATE	T.G. EL.	INV. EL.
204	1713+27.00	***	72" x 48" TYPE A MOD.	1	**	72.80
205	1716+27.00	***	72" x 48" TYPE A MOD.	1	**	71.90
206	1719+23.50	***	72" x 48" TYPE A MOD.	1	**	70.30
208	519+25.00	***	34" x 24" TYPE A MOD.	1	**	80.60
209	519+25.00	***	72" x 48" TYPE A MOD.	1	**	79.60
210	522+25.00	***	72" x 48" TYPE A MOD.	1	**	73.30
211	526+72.00	***	48" x 48" TYPE A MOD.	1	**	66.10
212	525+23.00	***	72" x 48" TYPE A MOD.	1	**	68.60
213	526+72.00	***	72" x 48" TYPE A MOD.	1	**	65.70
214	1723+04.00	***	72" x 24" TYPE A MOD.	1	**	64.90
215	529+05.00	***	72" x 48" TYPE A MOD.	1	**	63.10
216	531+42.00	***	72" x 48" TYPE A MOD.	1	**	60.70
237	1715+50.00	***	72" x 48" TYPE A MOD.	1	**	74.00
238	1717+72.00	***	72" x 48" TYPE A MOD.	1	**	71.70
239	1720+20.00	***	72" x 48" TYPE A MOD.	1	**	67.13*
240	1721+05.00	***	34" x 24" TYPE A MOD.	1	**	68.00
241	1723+60.00	***	72" x 48" TYPE A MOD.	1	**	66.40
243	466+18.00	***	SPECIAL X, TYPE A MOD.	1	**	67.28*
244	469+72.00	***	72" x 24" TYPE A MOD.	1	**	66.70
3 245	458+00.00	***	72" x 48" TYPE A MOD.	1	~~** 84.28	77.40
3 246	461+63.00	***	72" x 24" TYPE A MOD.	1	~~** 80.17	75.90
3 247	463+84.00	***	72" x 24" TYPE A MOD.	1	~~** 77.56	73.15
249	467+71.50	***	48" x 30" TYPE A MOD.	1	**	68.80
250	470+06.50	***	SPECIAL II, TYPE A MOD.	1	**	66.46*
256	1227+08.00	***	72" x 24" TYPE A MOD.	1	**	104.40
3 258	83+65.00	***	72" x 48" TYPE A MOD.	1	~~** 84.83	79.00
260	1224+35.00	***	72" x 24" TYPE A MOD.	1	**	86.00
3 262	86+41.00	***	72" x 48" TYPE A MOD.	1	~~** 81.73	77.70
3 264	89+35.00	***	72" x 24" TYPE A MOD.	1	~~** 78.19	71.30
265	1221+10.00	-29.50	72" x 24" TYPE A	1	76.00	70.95
266	1221+10.00	***	72" x 24" TYPE A MOD.	1	**	70.65
3 267	92+17.00	***	72" x 24" TYPE A MOD.	1	~~** 74.35	68.55
268	1218+30.00	***	72" x 24" TYPE A MOD.	1	**	68.50
269	1216+95.00	***	72" x 48" TYPE A MOD.	1	**	66.70
276	1213+99.00	***	72" x 48" TYPE A MOD.	1	**	63.80
297	1711+88.00	***	72" x 48" TYPE A MOD.	1	**	77.00
298	463+84.00	***	SPECIAL X, TYPE A MOD.	1	**	72.60
351	461+63.00	***	SPECIAL XI, TYPE A MOD.	1	**	75.55
352	458+94.00	***	72" x 24" TYPE A MOD.	1	**	106.94
401	1224+35.00	***	72" x 24" TYPE A MOD.	1	**	94.50
402	1221+10.00	***	SPECIAL VI, TYPE A MOD.	1	**	70.20
403	1219+16.00	***	72" x 48" TYPE A MOD.	1	**	68.60
404	522+25.00	***	34" x 24" TYPE A MOD.	1	**	73.50

MANHOLE SCHEDULE

NO.	STATION	OFFSET	SIZE / TYPE	T.C. EL.	INV. EL.
40	1714+03.00	-6.00	48" ROUND	82.42	75.10
41	1218+30.00	37.00	48" x 30"	73.69	68.00
242	1724+84.00	-10.46	48" x 30"	70.38	65.80
257	1225+75.00	-5.00	48" x 30"	103.57	97.00

* TO BE VERIFIED BY ENGINEER IN THE FIELD.

** MATCH FLOWLINE OF PROPOSED CURB AND GUTTER.

*** MATCH PROPOSED CURB LINE.

UNDERDRAIN SCHEDULE

NO.	SIZE / TYPE	LENGTH	DIS. TYPE	DIS. EL.
206	6" PERFORATED	290.00	DI-402	79.23
207	6" PERFORATED	194.00	DI-403	72.24
208	6" PERFORATED	221.00	DI-269	68.01
209	6" PERFORATED	296.00	DI-276	65.25
210	6" PERFORATED	170.50	DI-275	63.39
211	6" PERFORATED	290.00	DI-266	78.56
212	6" PERFORATED	280.00	DI-268	71.98
213	6" PERFORATED	24.30	DI-268	71.74
214	6" PERFORATED	155.62	DI-245	80.12
215	6" PERFORATED	363.00	DI-246	76.34
216	6" PERFORATED	221.00	DI-247	73.74
217	6" PERFORATED	218.50	DI-248	71.50
218	6" PERFORATED	169.00	DI-249	69.30
219	6" PERFORATED	235.00	DI-250	66.66
220	6" PERFORATED	15.00	XXXXXXX	XX.XX
221	6" PERFORATED	38.00	DI-243	81.44
222	6" PERFORATED	354.00	DI-244	69.35
223	6" PERFORATED	86.88	DI-244	67.18
224	6" PERFORATED	113.44	DI-297	80.57
225	6" PERFORATED	362.00	DI-237	76.26
226	6" PERFORATED	222.00	DI-238	73.61
227	6" PERFORATED	248.00	DI-239	70.74
228	6" PERFORATED	85.00	DI-240	69.88
229	6" PERFORATED	255.00	DI-241	67.48
230	6" PERFORATED	87.59	DI-241	66.51
231	6" PERFORATED	229.00	DI-201	78.84
232	6" PERFORATED	300.00	DI-205	75.26
233	6" PERFORATED	296.50	DI-206	71.73
234	6" PERFORATED	380.50	DI-214	67.44
235	6" PERFORATED	495.72	DI-218	61.55
236	6" PERFORATED	310.55	DI-208	82.25
237	6" PERFORATED	300.00	DI-404	75.94
238	6" PERFORATED	447.00	DI-211	70.26
239	6" PERFORATED	728.00	DI-218	61.76
240	6" PERFORATED	310.55	DI-209	81.38
241	6" PERFORATED	300.00	DI-210	75.14
242	6" PERFORATED	298.00	DI-212	71.30
243	6" PERFORATED	149.00	DI-213	69.69
244	6" PERFORATED	233.00	DI-215	63.10
245	6" PERFORATED	237.00	DI-216	64.25

UNOFFICIAL WEBSITE COPY

UNOFFICIAL WEBSITE COPY

NOTES(CONT.): 3

7. 4" DIA. PVC DRAINS SHALL BE SPACED AT 15'-0" C/C.
8. GEOTEXTILE SHALL CONFORM TO THE REQUIREMENTS OF SUBSECTION 827.06.
9. COST OF THE CONCRETE FOOTER, ALL REINFORCEMENT, DRAINAGE APPURTENANCES, JOINT MATERIAL, GEOTEXTILE, EXCAVATION, BACKFILL, LABOR, TOOLS, EQUIPMENT, ETC., AND ALL INCIDENTALS SHALL BE INCLUDED IN THE CONTRACT UNIT PRICE PER LINEAR FOOT FOR ITEM NO. 720529, 720655 AND 720656.

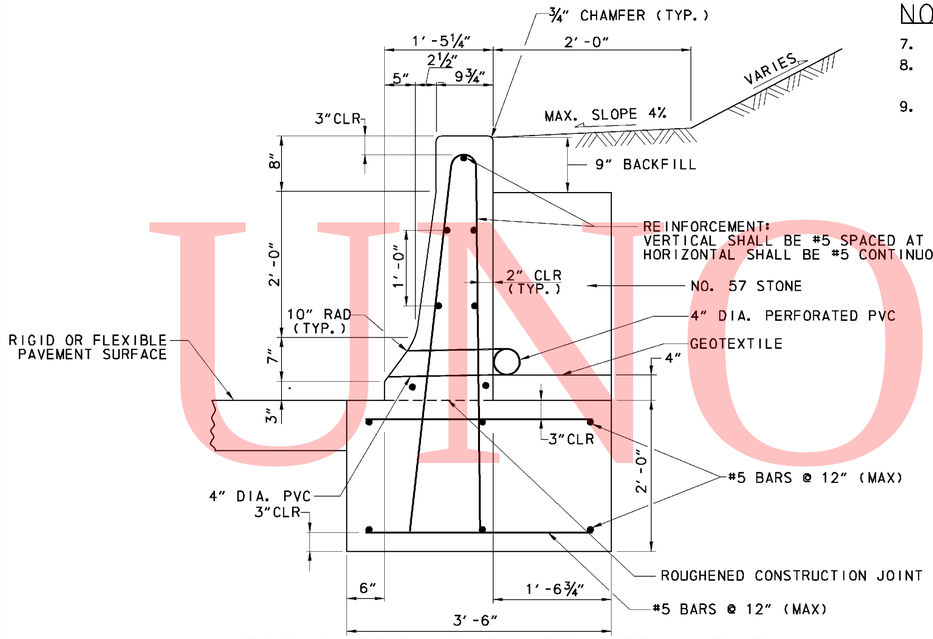

PCC SAFETY BARRIER PERMANENT, SINGLE FACE, MODIFIED TYPE 2 (720655)

NOT TO SCALE

42 INCH F-SHAPE
(BOTTOM OF CUT OR TOE OF FILL)

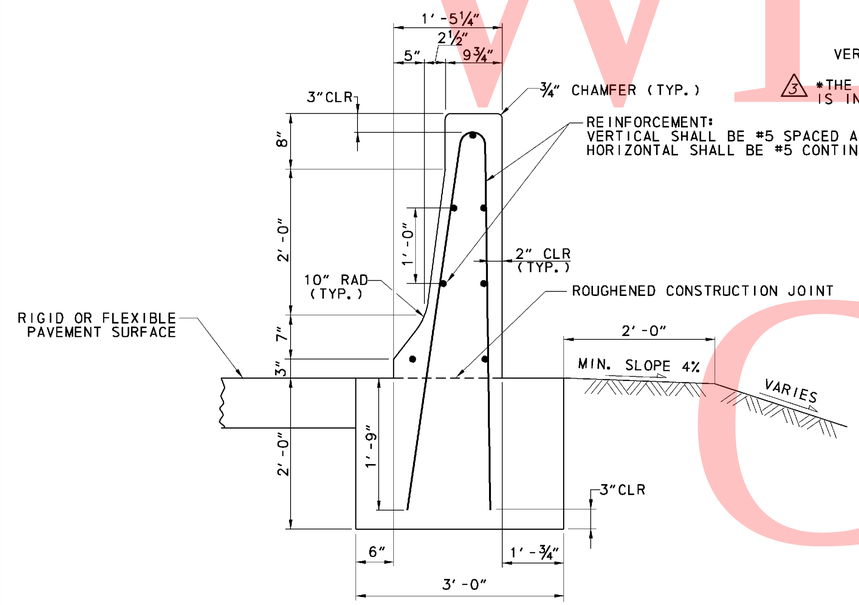

PCC SAFETY BARRIER PERMANENT, SINGLE FACE ~~(720512)~~ (720529) 3

NOT TO SCALE

42 INCH F-SHAPE (FREE STANDING - FILL)

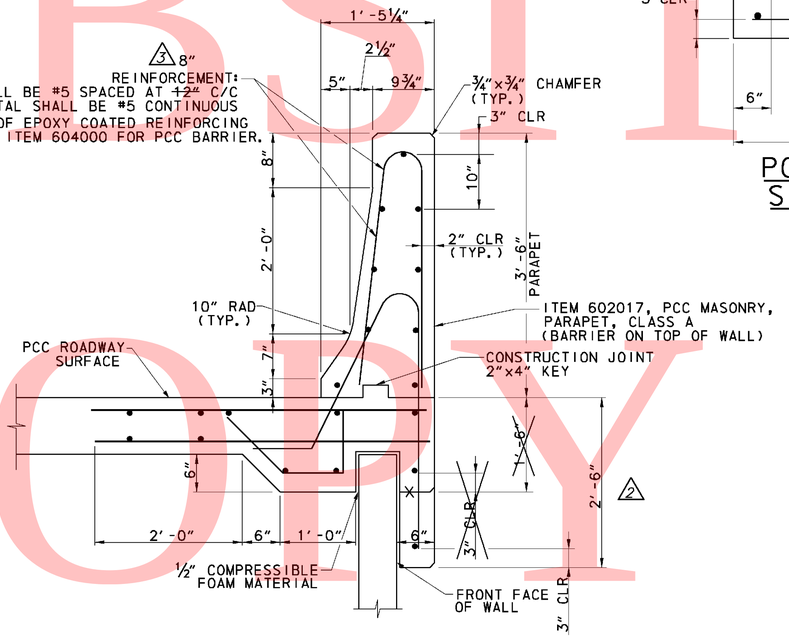

PCC BARRIER

NOT TO SCALE

42 INCH F-SHAPE

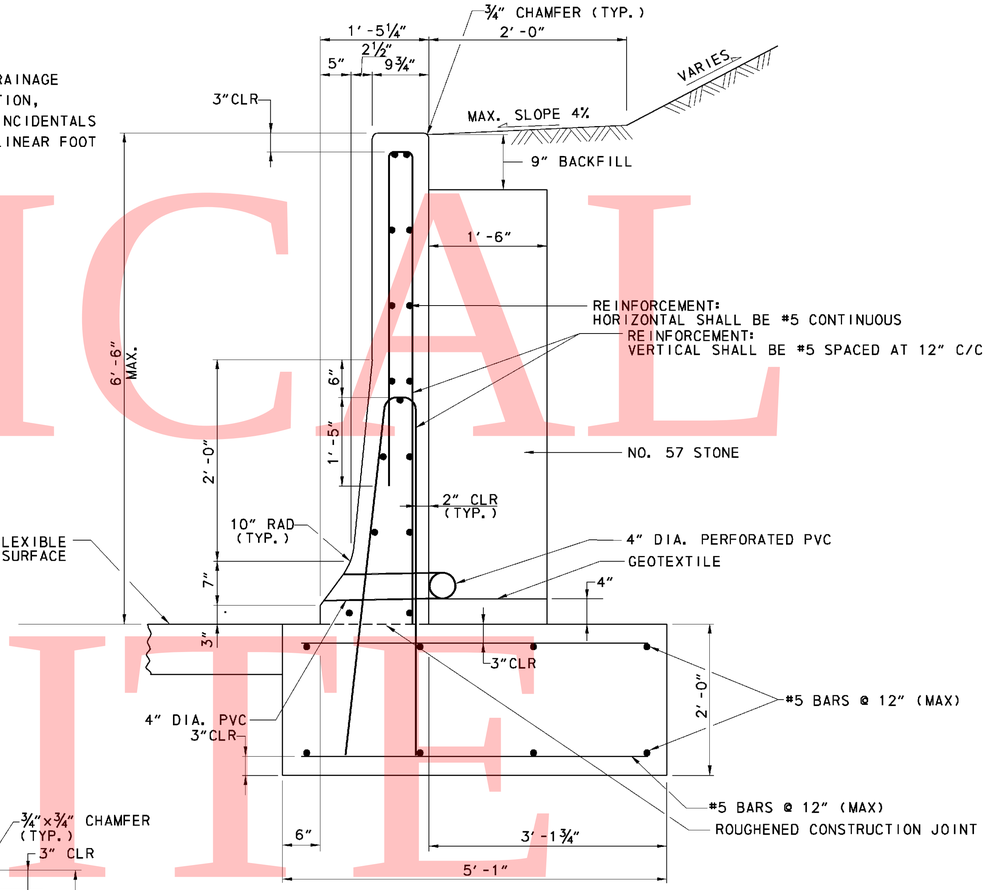

PCC SAFETY BARRIER PERMANENT, SINGLE FACE, MODIFIED TYPE 3 (720656)

NOT TO SCALE

42 INCH F-SHAPE 1'-6" TO 4'-0"

NOTES:

1. ALL CONCRETE SHALL BE 4500 PSI. BARRIER AND FOOTING SHALL BE CAST SEPARATELY.
2. ALL REINFORCING BARS SHALL BE ASTM A615, GRADE 60. ALL BARS SHALL BE EPOXY COATED.
3. ALL REINFORCING BAR LAP SPLICES SHALL BE 24" MINIMUM.
4. CONTRACTION JOINTS SHALL BE SPACED AT 20'-0".
5. BARRIER FOOTER AND BARRIER FORMS SHALL BE REMOVED PRIOR TO PLACING PAVEMENT.
6. OUTLET 4" DIA PVC DRAIN INTO INLET WHERE POSSIBLE.

2 CROSS REFERENCE NOTES:

1. FOR BARRIER END SEGMENT DETAILS, SEE SHEET NO. 183.
2. FOR MINIMUM BARRIER SECTION LENGTH, SEE SHEET NO. 183.

DELAWARE DEPARTMENT OF TRANSPORTATION	ADDENDUMS / REVISIONS		SR1 / I-95 INTERCHANGE	CONTRACT	28-090-03	BRIDGE NO.		BARRIER DETAILS	SHEET NO.	182
	ADDENDUM NO. 2, UPDATED PCC BARRIER, ADDED CROSS REFERENCE NOTES, 01/26/11, JSW & DWD			COUNTY	NEW CASTLE	DESIGNED BY:	RMB		TOTAL SHTS.	803
	ADDENDUM NO. 3, BARRIER ITEM NUMBER, NOTES, 2/18/11, DWD					CHECKED BY:	DWD			

2/16/2011 5:14:10 PM
M:\PROJECTS\2003\03059_DELTRNPK\SR1_MALL\CADD\2809003\PLANS.DOV\SR1 BARRIER SHEETS\DT01_SR1.DGN

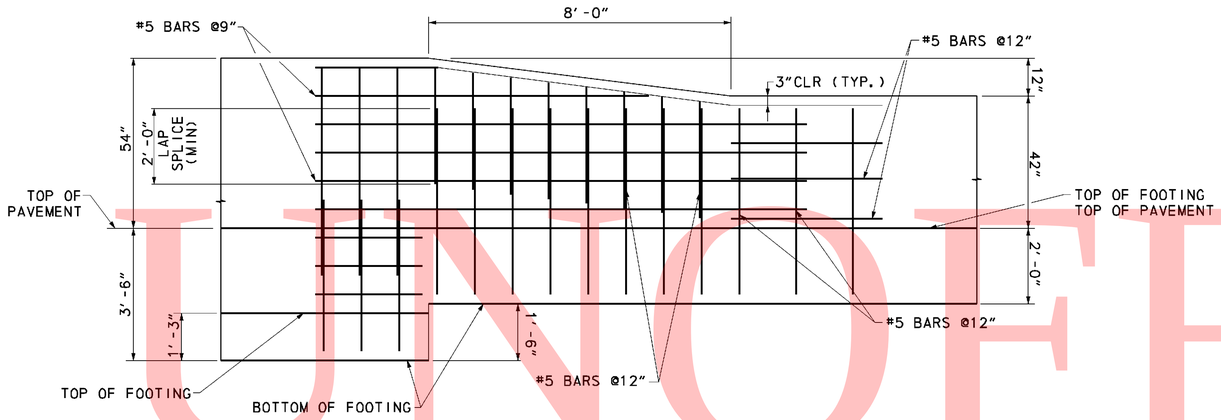

54" to 42" BARRIER TRANSITION DETAIL

NOT TO SCALE

BARRIER ITEM NO.	MINIMUM BARRIER SECTION LENGTH
720512	20'-0"
720651	20'-0"
720652	55'-0"
720654	20'-0"
720655	20'-0"
720656	20'-0"
720657	75'-0"
720658	55'-0"

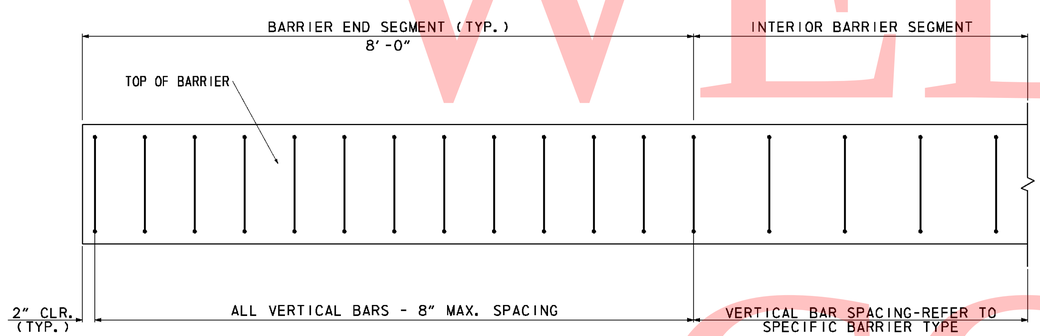

PLAN

HORIZONTAL BARS AND BARRIER FOOTING NOT SHOWN FOR CLARITY

⚠2 BARRIER END SEGMENT DETAIL

NOT TO SCALE

BARRIER END SEGMENT DETAIL APPLIES TO ALL ROADWAY BARRIERS (ITEM NO. ~~720512~~, 720651, 720652, 720654, 720655, 720656, 720657, 720658 AND PCC BARRIER)

720529 ⚠3

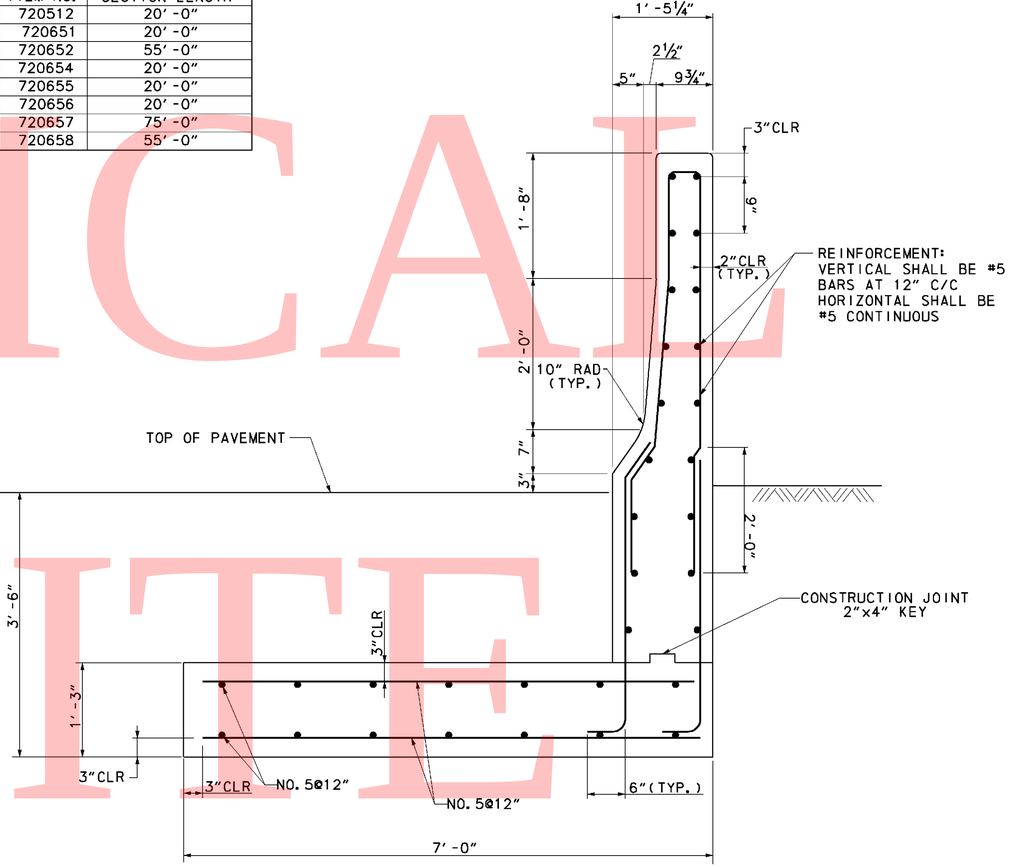

PCC SAFETY BARRIER PERMANENT, SINGLE FACE MODIFIED TYPE 4 (720657)

NOT TO SCALE

NOTES:

1. ALL CONCRETE SHALL BE 4500 PSI. BARRIER AND FOOTING SHALL BE CAST SEPARATELY.
2. ALL REINFORCING BARS SHALL BE ASTM A615, GRADE 60. ALL BARS SHALL BE EPOXY COATED.
3. ALL REINFORCING BAR LAP SPLICES SHALL BE 24" MINIMUM.
4. CONTRACTION JOINTS SHALL BE SPACED AT 20'-0".
5. BARRIER FOOTER AND BARRIER FORMS SHALL BE REMOVED PRIOR TO PLACING PAVEMENT.
6. OUTLET 4" DIA PVC DRAIN INTO INLET WHERE POSSIBLE.
7. ⚠3 COST OF THE CONCRETE FOOTER, ALL REINFORCEMENT, DRAINAGE APPURTENANCES, JOINT MATERIAL, GEOTEXTILE, EXCAVATION, BACKFILL, LABOR, TOOLS, EQUIPMENT, ETC., AND ALL INCIDENTALS SHALL BE INCLUDED IN THE CONTRACT UNIT PRICE PER LINEAR FOOT FOR ITEM NO. 720657.

UNOFFICIAL WEBSITE COPY

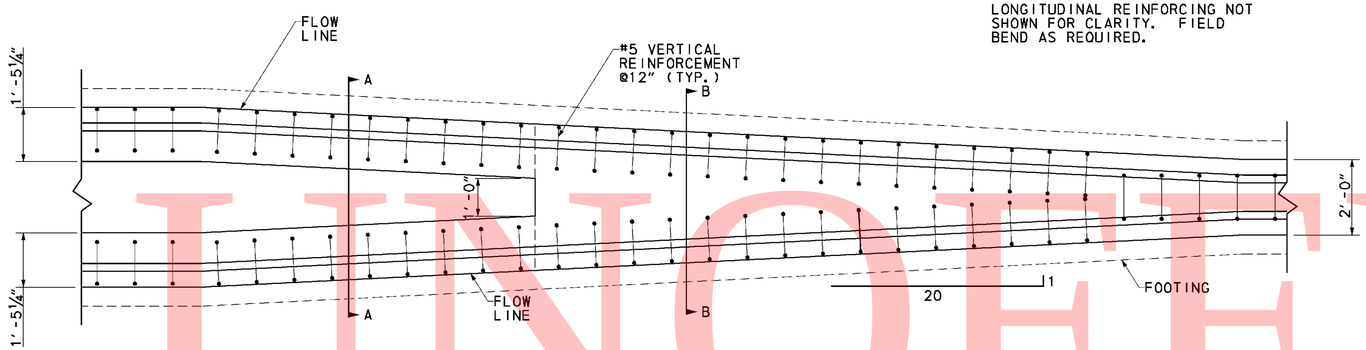

PLAN

LONGITUDINAL REINFORCING NOT SHOWN FOR CLARITY. FIELD BEND AS REQUIRED.

TRANSITION DETAIL DOUBLE FACE TO TWO SINGLE FACE

NOT TO SCALE

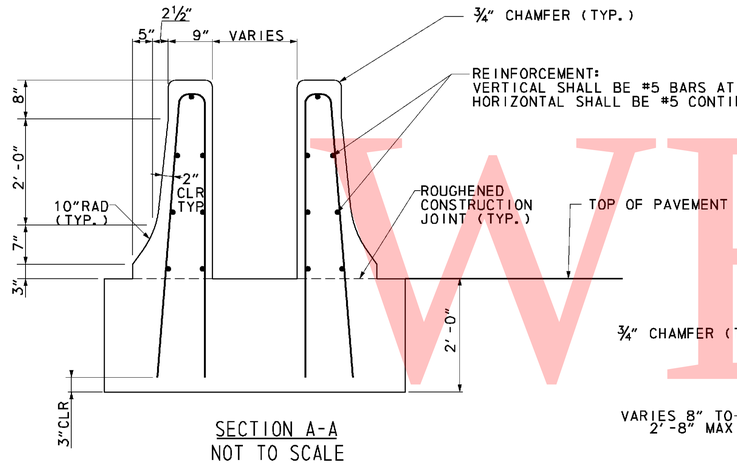

SECTION A-A

NOT TO SCALE

IF TAPER EXCEEDS 70'-0", A TRANSITION FROM SECTION A-A TO TWO SINGLE FACE BARRIERS (7205012) WITH 6" MIN GAP BETWEEN FOOTINGS IS ACCEPTABLE.

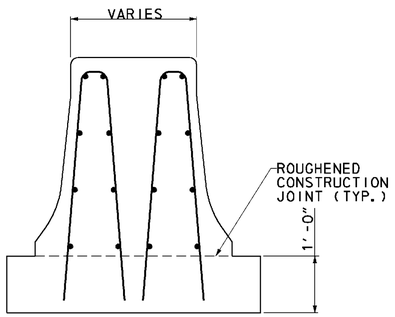

SECTION B-B

NOT TO SCALE

NOTES (CONT.): △3

7. 4" DIA. PVC DRAINS SHALL BE SPACED AT 15'-0" C/C.
8. GEOTEXTILE SHALL CONFORM TO THE REQUIREMENTS OF SUBSECTION 827.06.
9. COST OF THE CONCRETE FOOTER, ALL REINFORCEMENT, DRAINAGE APPURTENANCES, JOINT MATERIAL, GEOTEXTILE, EXCAVATION, BACKFILL, LABOR, TOOLS, EQUIPMENT, ETC., AND ALL INCIDENTALS SHALL BE INCLUDED IN THE CONTRACT UNIT PRICE PER LINEAR FOOT FOR ITEM NO. 720651 AND 720652.

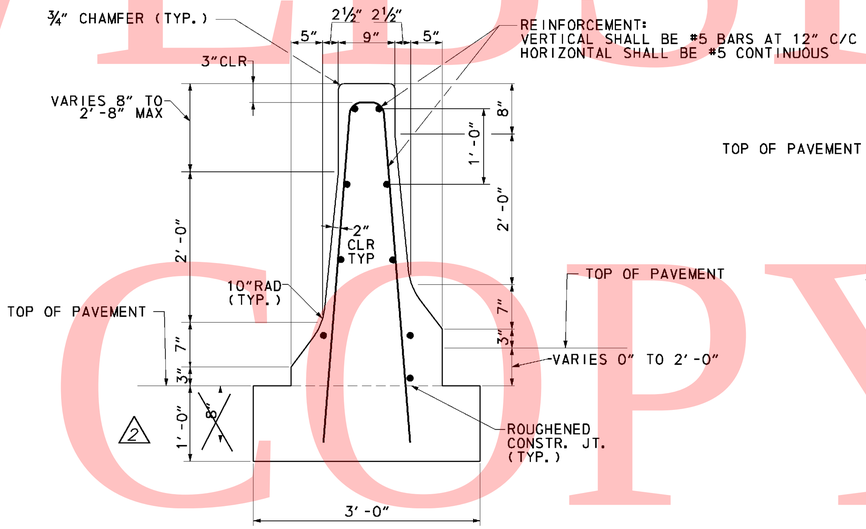

PCC SAFETY BARRIER PERMANENT, DOUBLE FACE BIFURCATED TYPE 1 (720651)

NOT TO SCALE

42 INCH F-SHAPE 0" TO 2'-0"

NOTES:

1. ALL CONCRETE SHALL BE 4500 PSI. BARRIER AND FOOTING SHALL BE CAST SEPARATELY.
2. ALL REINFORCING BARS SHALL BE ASTM A615, GRADE 60. ALL BARS SHALL BE EPOXY COATED.
3. ALL REINFORCING BAR LAP SPLICES SHALL BE 24" MINIMUM.
4. CONTRACTION JOINTS SHALL BE SPACED AT 20'-0".
5. BARRIER FOOTER AND BARRIER FORMS SHALL BE REMOVED PRIOR TO PLACING PAVEMENT.
6. OUTLET 4" DIA PVC DRAIN INTO INLET WHERE POSSIBLE.

△2 CROSS REFERENCE NOTES:

1. FOR BARRIER END SEGMENT DETAILS, SEE SHEET NO. 183.
2. FOR MINIMUM BARRIER SECTION LENGTH, SEE SHEET NO. 183.

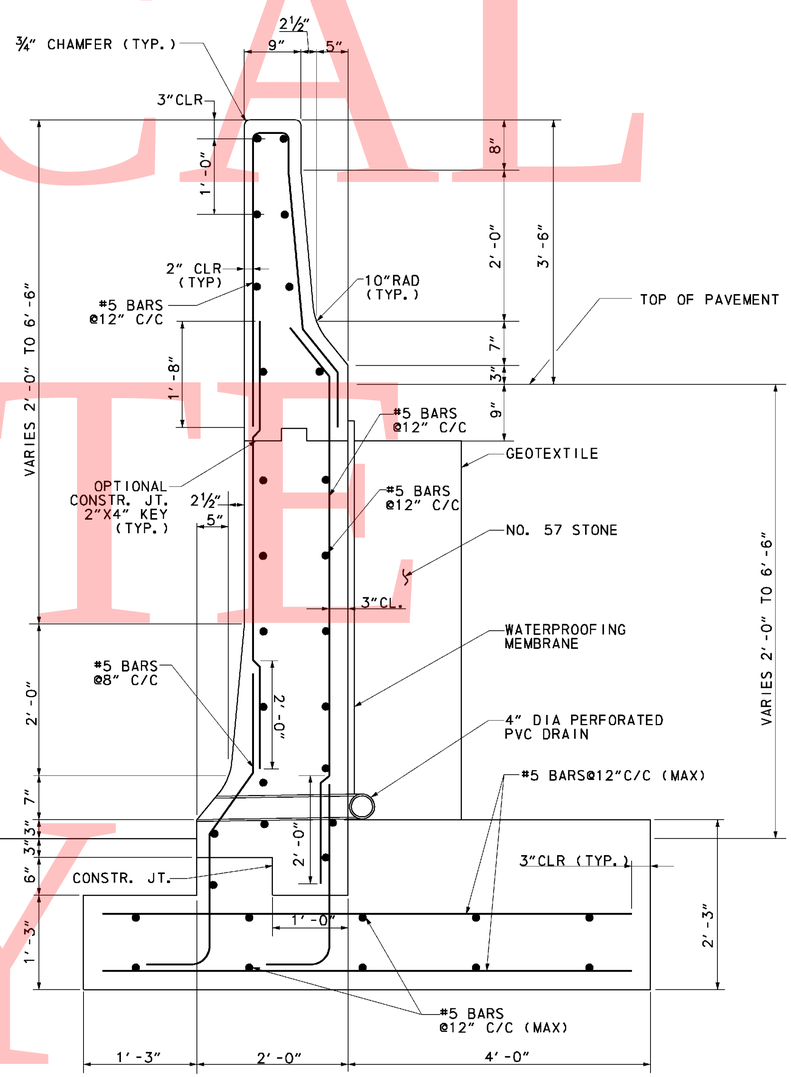

PCC SAFETY BARRIER PERMANENT, DOUBLE FACE BIFURCATED TYPE 2 (720652)

NOT TO SCALE

42 INCH F-SHAPE 2'-0" TO 6'-6"

UNOFFICIAL WEBSITE COPY

DELAWARE DEPARTMENT OF TRANSPORTATION	ADDENDUMS / REVISIONS		SR1 / I-95 INTERCHANGE	CONTRACT 28-090-03	BRIDGE NO.	BARRIER DETAILS	SHEET NO. 184
	ADDENDUM NO. △2, CORRECTED BARRIER 720651 FTG DEPTH, CROSS REFERENCE NOTES, 01/26/11, DWD			COUNTY NEW CASTLE	DESIGNED BY: RWB		TOTAL SHTS. 803
	ADDENDUM NO. △3, ADDED NOTES, 02/18/11, DWD				CHECKED BY: DWD		

2/16/2011 5:28:26 PM
M:\PROJECTS\2003\03059_DELTRNPK\SR1_MALL\PHASE III CONSTRUCTION SERVICES\ADDENDUM 3\CADD WORKING DRAWINGS\DT03_SR1.DGN

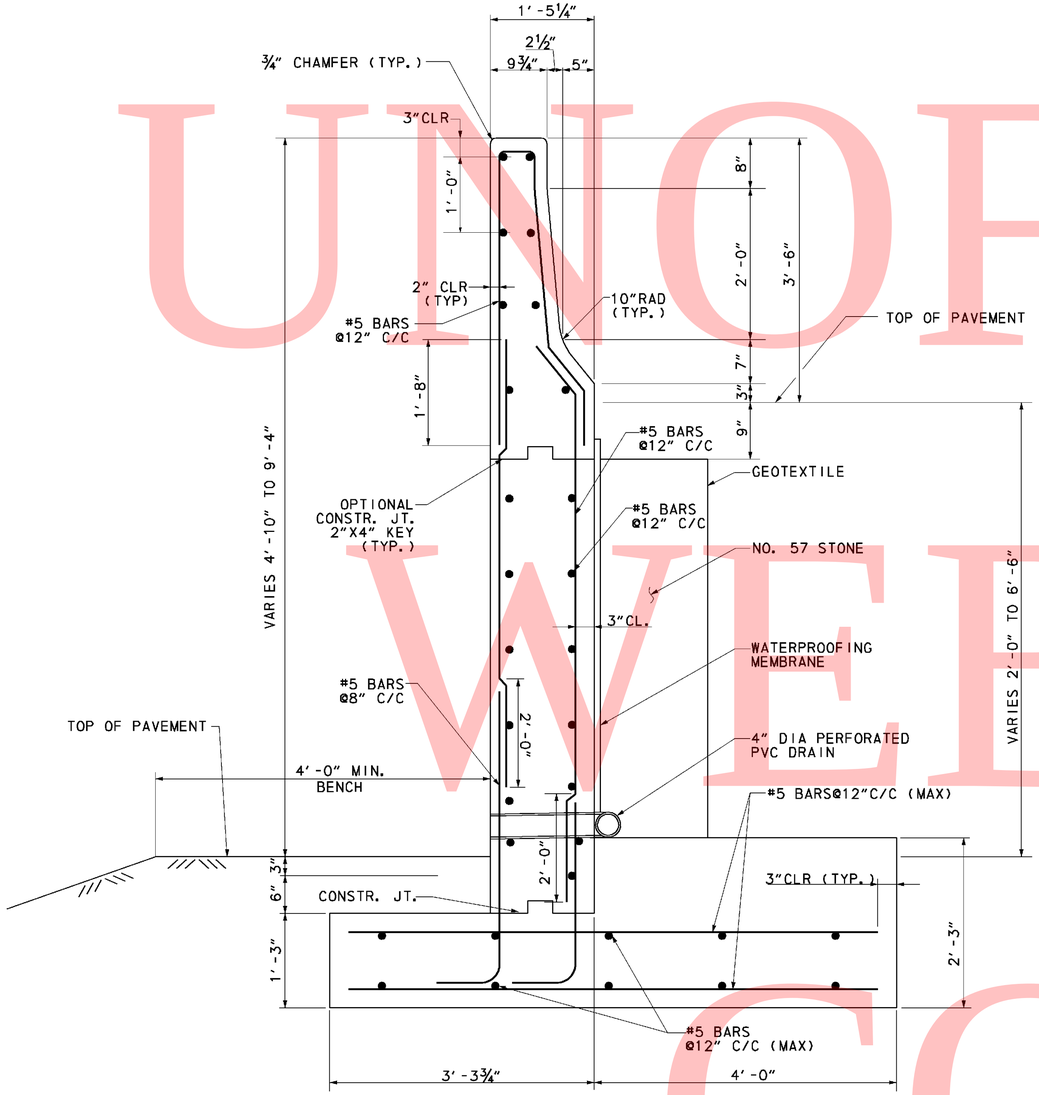

PCC SAFETY BARRIER PERMANENT, SINGLE FACE, MODIFIED TYPE 5 ~~(720585)~~ (720658) ⚠2

NOT TO SCALE

42 INCH F-SHAPE 2′-0″ TO 6′-6″

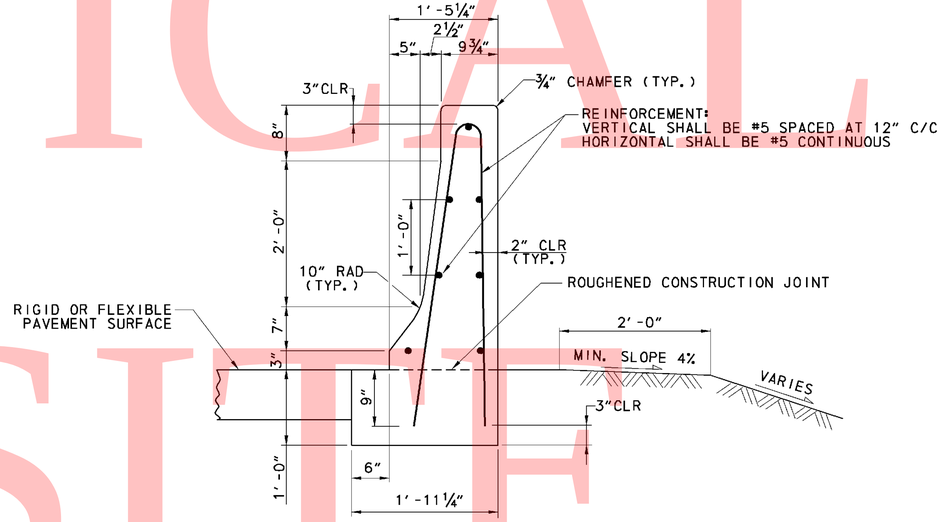

PCC SAFETY BARRIER PERMANENT, SINGLE FACE MODIFIED TYPE 1 (720654)

NOT TO SCALE

42 INCH F-SHAPE (FREE STANDING - FILL)

⚠2 7. 4″ DIA. PVC DRAINS SHALL BE SPACED AT 15′-0″ C/C.

8. GEOTEXTILE SHALL CONFORM TO THE REQUIREMENTS OF SUBSECTION 827.06.

9. COST OF THE CONCRETE FOOTER, ALL REINFORCEMENT, DRAINAGE APPURTENANCES, JOINT MATERIAL, GEOTEXTILE, EXCAVATION, BACKFILL, LABOR, TOOLS, EQUIPMENT, ETC., AND ALL INCIDENTALS SHALL BE INCLUDED IN THE CONTRACT UNIT PRICE PER LINEAR FOOT FOR ITEM NO. 720654 AND 720658.

NOTES:

1. ALL CONCRETE SHALL BE 4500 PSI. BARRIER AND FOOTING SHALL BE CAST SEPARATELY.
2. ALL REINFORCING BARS SHALL BE ASTM A615, GRADE 60. ALL BARS SHALL BE EPOXY COATED.
3. ALL REINFORCING BAR LAP SPLICES SHALL BE 24″ MINIMUM.
4. CONTRACTION JOINTS SHALL BE SPACED AT 20′-0″.
5. BARRIER FOOTER AND BARRIER FORMS SHALL BE REMOVED PRIOR TO PLACING PAVEMENT.
6. OUTLET 4″ DIA PVC DRAIN INTO INLET WHERE POSSIBLE.

⚠2 CROSS REFERENCE NOTES:

1. FOR BARRIER END SEGMENT DETAILS, SEE SHEET NO. 183.
2. FOR MINIMUM BARRIER SECTION LENGTH, SEE SHEET NO. 183.

UNOFFICAL WEBSITE COPY

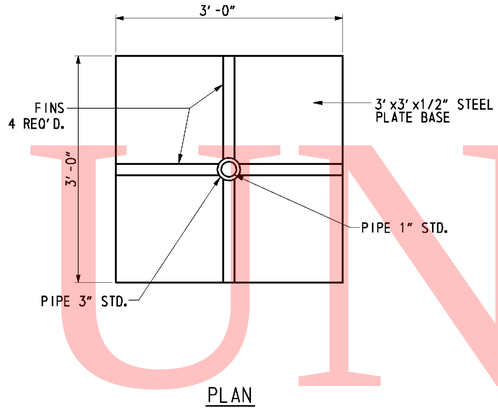

PLAN

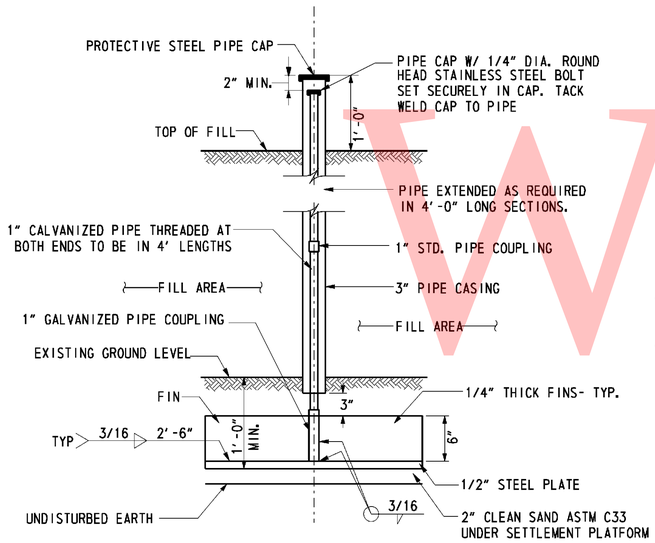

ELEVATION

NOTES:

⚠2 1. SETTLEMENT PLATFORMS AND SETTLEMENT MONUMENTS (SM) SHALL BE INSTALLED ACCORDING TO SPECIAL PROVISIONS ~~XXX.~~ 202505 & 202518.

⚠2 2. VIBRATING WIRE PIEZIEOMETERS SHALL BE INSTALLED PER SPECIAL PROVISION ~~XXX.~~ 202514.

3. THE SETTLEMENT PLATFORM SHALL BE INSTALLE DWITH THE PIPE PLUMB.

4. THE ELEVATION OF THE SETTLEMENT PLATFORMS AND GROUND SURFACE NEAR THE INSTRUMENTS SHALL BE SURVEYED UPON INSTALLATION, AND AGAIN 24-72 HOURS AFTER INSTALLATION TO VERIFY INITAL DATA.

5. SETTLEMENT PLATFORMS SHALL BE READ AT LEAST WEEKLY DURING FILL OPERATION ANDWEEKLY THEREAFTER FOR 30 DAYS. SETTLEMENT PLATFORMS SHALL BE READ ONCE EVERYMONTH THEREAFTER FOR 6 MONTHS, OR AS DIRECTED BY THE ENGINEER.

6. WHEN MEASURING SETTLEMENTS CONTRACTOR SHALL ALSO MEASURE ELEVATION AT THE TOP OF FILL ADJACENT TO SETTLEMENT PLATFORMS AND SETTLMENT MONUMNETS.

7. THE CONTRACTOR SHALL PROTECT ALL SETTLEMENT PLATFORMS AND SETTLEMENT MONUMENT FROM DAMAGE DUE TO CONSTRUCTION OPERATIONS, WEATHER, TRAFFIC, AND VANDALISM. IF A SETTLEMENT PLATFORM OR SETTLEMENT MONUMENT IS DAMAGED, THE CONTRACTOR SHALL REPAIR OR REPLACE THE DAMAGED SETTLEMENT PLATFORM AT NO ADDITIONALCOST TO THE AUTHORITY.

8. THE ELEVATION OF THE SETTLEMENT PLATFORM SHALL BE SURVEYED BEFORE AND AFTER EACH RISER IS INSTALLED.

⚠3 9. DEPTH OF VIBRATING WIRE PIEZOMETERS IS DEPTH BELOW LEVELING PAD. IT SHOULD BE VERIFIED THAT THE PIEZOMETERS ARE INSTALLED IN A CLAY LAYER, NOT A SAND LAYER.

VIBRATING WIRE PIEZOMETERS

STRUCTURE NO.	INSTRUMENT NAME	COORDINATES		BASELINE	STATION	OFFSET	⚠3 DEPTH (FT)
		NORTHING	EASTING				
S-6-VP-1	S-6-VP-1	613423	433051	RAMP B	450+45	04 LT	30
S-6-VP-2	S-6-VP-2	613401	433073	RAMP B	450+65	28 RT	30
S-6-VP-3	S-6-VP-3	613847	433691	RAMP B	~~458+16~~	04 LT	30
S-6-VP-4	S-6-VP-4	613826	433720	RAMP B	~~458+15~~	27 RT	30

⚠3 458+15

SETTLEMENT MONITORING LOCATIONS

STRUCTURE NO.	INSTRUMENT NAME	INSTRUMENTATION TYPE	COORDINATES		BASELINE	STATION	OFFSET
			NORTHING	EASTING			
S1	S-1-SP-1	SETTLEMENT PLATFORM	613933	433547	RAMP A	1227+48	15
S1	S-1-SM-1	SETTLEMENT MONUMENTS	613894	433534	RAMP A	1227+81	11
S1	S-1-SM-2	SETTLEMENT MONUMENTS	613937	433506	RAMP A	1227+81	41
S1	S-1-SP-2	SETTLEMENT PLATFORM	613317	432917	RAMP A	1236+30	0
S1	S-1-SM-3	SETTLEMENT MONUMENTS	613342	432951	RAMP A	1235+89	11
S1	S-1-SM-4	SETTLEMENT MONUMENTS	613375	432912	RAMP A	1235+89	41
S2	S-2-SP-1	SETTLEMENT PLATFORM	612534	432437	RAMP A	1245+51	0
S2	S-2-SM-1	SETTLEMENT MONUMENTS	612502	432435	RAMP A	1245+81	11
S2	S-2-SM-2	SETTLEMENT MONUMENTS	612518	432399	RAMP A	1245+81	29
S2	S-2-SP-2	SETTLEMENT PLATFORM	612014	432275	RAMP A	1250+97	09
S2	S-2-SM-3	SETTLEMENT MONUMENTS	612045	432300	RAMP A	1250+29	11
S2	S-2-SM-4	SETTLEMENT MONUMENTS	612051	432261	RAMP A	1250+29	29
S3	S-3-SP-1	SETTLEMENT PLATFORM	611874	432312	RAMP B	432+93	15
S3	S-3-SM-1	SETTLEMENT MONUMENTS	611910	432296	RAMP B	433+28	04
S3	S-3-SM-2	SETTLEMENT MONUMENTS	611907	432334	RAMP B	433+28	34
S3	S-3-SP-2	SETTLEMENT PLATFORM	612297	432391	RAMP B	437+28	15
S3	S-3-SM-3	SETTLEMENT MONUMENTS	612269	432363	RAMP B	436+93	04
S3	S-3-SM-4	SETTLEMENT MONUMENTS	612258	432400	RAMP B	436+93	34
S4	S-4-SP-1	SETTLEMENT PLATFORM	612421	432202	RAMP C	1114+32	06
S4	S-4-SM-1	SETTLEMENT MONUMENTS	612450	432224	RAMP C	1114+66	07
S4	S-4-SM-2	SETTLEMENT MONUMENTS	612430	432228	RAMP C	1114+66	18
S4	S-4-SP-2	SETTLEMENT PLATFORM	612667	432415	RAMP C	1117+59	06
S4	S-4-SM-3	SETTLEMENT MONUMENTS	612642	432288	RAMP C	1117+18	07
S4	S-4-SM-4	SETTLEMENT MONUMENTS	612630	432410	RAMP C	1117+18	18
S5	S-5-SP-1	SETTLEMENT PLATFORM	612581	432414	RAMP G1	1311+18	0
S5	S-5-SM-1	SETTLEMENT MONUMENTS	612546	432403	RAMP G1	1311+53	11
S5	S-5-SM-2	SETTLEMENT MONUMENTS	612563	432378	RAMP G1	1311+53	20
S5	S-5-SP-2	SETTLEMENT PLATFORM	611999	432135	RAMP G1	1317+73	03
S5	S-5-SM-3	SETTLEMENT MONUMENTS	612032	432147	RAMP G1	1317+38	11
S5	S-5-SM-4	SETTLEMENT MONUMENTS	612037	432117	RAMP G1	1317+38	20
S6	S-6-SP-1	SETTLEMENT PLATFORM	613423	433033	RAMP B	450+53	04 RT
S6	S-6-SM-1	SETTLEMENT MONUMENTS	613437	433065	RAMP B	450+65	04 LT
S6	S-6-SM-2	SETTLEMENT MONUMENTS	613401	433073	RAMP B	450+45	27 RT
S6	S-6-SP-2	SETTLEMENT PLATFORM	613412	433074	RAMP B	450+53	19 RT
S6	S-6-SM-4	SETTLEMENT MONUMENTS	613817	433702	RAMP B	458+35	04 LT
S6	S-6-SP-3	SETTLEMENT PLATFORM	613844	433704	RAMP B	458+27	04 RT
S6	S-6-SM-3	SETTLEMENT MONUMENTS	613855	433709	RAMP B	458+15	28 RT
S6	S-6-SP-4	SETTLEMENT PLATFORM	613830	433709	RAMP B	458+27	19 RT
RW1	RW-1-SP-1	SETTLEMENT PLATFORM	611937	432268	RAMP A	1251+74	07
RW1	RW-1-SM-1	SETTLEMENT MONUMENTS	611976	432292	RAMP A	1251+32	12
RW2	RW-2-SP-1	SETTLEMENT PLATFORM	612615	432439	RAMP G1	1310+76	03
RW2	RW-2-SM-1	SETTLEMENT MONUMENTS	612632	432421	RAMP G1	1310+71	22
RW2	RW-2-SM-2	SETTLEMENT MONUMENTS	612600	432400	RAMP G1	1311+10	22
RW3	RW-3-SM-1	SETTLEMENT MONUMENTS	612472	432433	RAMP B	439+07	07
RW3	RW-3-SP-1	SETTLEMENT PLATFORM	612376	432395	RAMP B	438+05	07
RW3	RW-3-SP-2	SETTLEMENT PLATFORM	612462	432456	RAMP B	439+07	18
RW3	RW-3-SM-2	SETTLEMENT MONUMENTS	612368	432419	RAMP B	438+05	18
RW4	RW-4-SM-1	SETTLEMENT MONUMENTS	611861	432347	SR 7	632+54	06 LT
RW5	RW-5-SM-1	SETTLEMENT MONUMENTS	613409	433037	RAMP B	450+61	05 LT
RW5	RW-5-SM-2	SETTLEMENT MONUMENTS	613354	432985	RAMP B	449+78	05 LT
RW6	RW-6-SM-1	SETTLEMENT MONUMENTS	612828	432471	RAMP C	1119+25	15 RT
RW6	RW-6-SM-2	SETTLEMENT MONUMENTS	612730	432449	RAMP C	1118+27	15 RT
RW6	RW-6-SM-3	SETTLEMENT MONUMENTS	612658	432421	RAMP C	117+51	15 RT
RW7	RW-7-SM-1	SETTLEMENT MONUMENTS	612013	432112	RAMP G1	1317+63	22 RT
RW7	RW-7-SM-2	SETTLEMENT MONUMENTS	611888	432101	RAMP G1	1318+88	22 RT
RW7	RW-7-SM-3	SETTLEMENT MONUMENTS	611787	432096	RAMP G1	1319+87	22 RT
RW7	RW-7-SM-4	SETTLEMENT MONUMENTS	611687	432093	RAMP G1	1320+87	22 RT
RW7	RW-7-SM-5	SETTLEMENT MONUMENTS	611583	432094	RAMP G1	1321+91	22 RT
RW7	RW-7-SM-6	SETTLEMENT MONUMENTS	611495	432097	RAMP G1	1322+78	22 RT
RW9	RW-9-SM-1	SETTLEMENT MONUMENTS	611725	432237	RAMP A	1253+86	31 RT
RW10	RW-10-SM-1	SETTLEMENT MONUMENTS	612428	432184	RAMP C	1114+18	09 LT
RW10	RW-10-SM-2	SETTLEMENT MONUMENTS	612388	432090	RAMP C	1113+14	09 LT
RW10	RW-10-SM-3	SETTLEMENT MONUMENTS	612370	431996	RAMP C	1112+17	09 LT
RW12	RW-12-SMP-1	SETTLEMENT MONUMENTS	614032	433661	RAMP A	1226+04	43 RT
RW12	RW-12-SMP-2	SETTLEMENT MONUMENTS	613983	433575	RAMP A	1227+00	43 RT
RW13	RW-13-SM-1	SETTLEMENT MONUMENTS	613910	433561	RAMP A	1226+35	13 LT
RW13	RW-13-SM-2	SETTLEMENT MONUMENTS	613968	433660	RAMP A	1227+51	13 LT
RW14	RW-14-SM-1	SETTLEMENT MONUMENTS	613831	433732	RAMP B	458+47	28 RT
RW14	RW-14-SM-2	SETTLEMENT MONUMENTS	613871	433832	RAMP B	459+55	27 RT
RW14	RW-14-SM-3	SETTLEMENT MONUMENTS	613908	433921	RAMP B	460+51	26 RT
RW14	RW-14-SM-4	SETTLEMENT MONUMENTS	613953	434028	RAMP B	461+67	25 RT
RW15	RW-15-SM-1	SETTLEMENT MONUMENTS	613955	433955	RAMP B	461+00	05 LT
RW15	RW-15-SM-2	SETTLEMENT MONUMENTS	613918	433862	RAMP B	460+00	05 LT
RW15	RW-15-SM-3	SETTLEMENT MONUMENTS	613881	433769	RAMP B	459+00	06 LT
RW16	RW-16-SM-1	SETTLEMENT MONUMENTS	612678	432388	SR7 NB	640+78	38 RT

UNOFFICIAL WEB COPY

2/14/2011 10:28:05 AM
M:\PROJECTS\2003\03059_DELTRNPK\SRINALL\CADD\2809003\PLANS\DT_SMP_SR1.DGN

DELAWARE DEPARTMENT OF TRANSPORTATION

ADDENDUMS / REVISIONS	
ADDENDUM NO. ⚠2 MODIFIED NOTES. 01/26/2011, RLS	
ADDENDUM NO. ⚠3 UPDATED NOTES AND CHART, 02/18/2011, GKG	

SR1 / I-95 INTERCHANGE

CONTRACT	BRIDGE NO.	
28-090-03	DESIGNED BY:	GKG
COUNTY	CHECKED BY:	EMK
NEW CASTLE		

SETTLEMENT MONITORING PLATFORM DETAIL

SHEET NO.
194A
TOTAL SHTS.
803

GENERAL NOTES

1. DESIGN SPECIFICATIONS
AASHTO LRFD BRIDGE DESIGN SPECIFICATIONS, 4th EDITION WITH 2009 INTERIM REVISIONS.
DELAWARE DEPARTMENT OF TRANSPORTATION BRIDGE DESIGN MANUAL, MAY 2005 INCLUDING LATEST REVISIONS. ANSI/AASHTO/AWS D1.5 BRIDGE WELDING CODE.

2. LOADING
UNIT WEIGHTS OF MATERIALS SHALL BE IN ACCORDANCE WITH THE DELAWARE DESIGN MANUAL.
FUTURE OVERLAY ALLOWANCE SHALL BE 25 LBS/SQ FT.
STEEL BRIDGE DECK FORMS WHICH STAY IN PLACE (INCLUDING CONCRETE IN FORM CORRUGATIONS) SHALL BE 15 LBS/SQ FT.
VEHICLE LIVE LOAD SHALL BE HL-93, WHICH CONSISTS OF A DESIGN TRUCK OR TANDEM WITH DYNAMIC LOAD ALLOWANCE AND A LANE LOAD. RATING SHALL USE ALL DELAWARE LEGAL LOADS SPECIFIED IN THE BRIDGE DESIGN MANUAL.
BARRIER HAS BEEN DESIGNED FOR TEST LEVEL FIVE (TL-5).
FATIGUE DESIGN SHALL BE BASED ON THE FOLLOWING ONE DIRECTIONAL TRAFFIC VOLUMES:

RAMP A OVER I-95: DESIGN ADT = 27,550, DESIGN ADTT = 3,300
FOR THERMAL LOADS, CONSIDER THE MODERATE TEMPERATURE RANGE AS STIPULATED IN THE AASHTO LRFD DESIGN SPECIFICATIONS. THE NORMAL TEMPERATURE SHALL BE CONSIDERED TO BE 60F.
FOR SEISMIC LOADS, CONSIDER SEISMIC PERFORMANCE ZONE 1, WITH A SITE CLASS = E AND IMPORTANCE CATEGORY - CRITICAL.

△3 3. PORTLAND CEMENT CONCRETE
PORTLAND CEMENT CONCRETE FOR CAST-IN-PLACE ELEMENTS SHALL BE AS FOLLOWS:
(28 DAY COMPRESSIVE STRENGTH)
~~ITEM NO. 602007 (CLASS A, F'c=4500 PSI) - PIER ABOVE FOOTING~~
~~ITEM NO. 602011 (CLASS A, F'c=4500 PSI) - PIER FOOTING, TOP OF PIER PILES~~
~~ITEM NO. 602786 (CLASS A, F'c=8000 PSI) - POST TENSIONED PIER CAP~~
~~ITEM NO. 602013 (CLASS D, F'c=4500 PSI) - DECK~~
~~ITEM NO. 602014 (CLASS D, F'c=4500 PSI) - APPROACH SLAB~~
~~ITEM NO. 602015 (CLASS A, F'c=4500 PSI) - ABUTMENT, TOP OF ABUTMENT PILES~~
~~ITEM NO. 602017 (CLASS A, F'c=4500 PSI) - BARRIER~~

602007 - PORTLAND CEMENT CONCRETE MASONRY, PIER ABOVE FOOTING, CLASS A (fc' = 4,500 PSI, PIER ABOVE FOOTING)
602011 - PORTLAND CEMENT CONCRETE MASONRY, PIER FOOTING, CLASS A (fc' = 4,500 PSI, PIER FOOTING, TOP OF PIER PILES)
602013 - PORTLAND CEMENT CONCRETE MASONRY, SUPERSTRUCTURE, CLASS D (fc' = 4,500 PSI, DECK)
602014 - PORTLAND CEMENT CONCRETE MASONRY, APPROACH SLAB, CLASS D (fc' = 4,500 PSI, APPROACH SLAB)
602015 - PORTLAND CEMENT CONCRETE MASONRY, ABUTMENT ABOVE FOOTING, CLASS A (fc' = 4,500 PSI, ABUTMENT, TOP OF ABUTMENT PILES)
602017 - PORTLAND CEMENT CONCRETE MASONRY, PARAPET, CLASS A (fc' = 4,500 PSI, BARRIER)
602786 - PORTLAND CEMENT CONCRETE MASONRY, SUBSTRUCTURE, 8000PSI (fc' = 8,000 PSI, PIER CAP 1, 2 & 3)
602787 - POST TENSIONING PIER CAPS, BONDED SYSTEM, (PIER CAPS 1, 2 & 3)

MIX REQUIREMENTS SHALL CONFORM TO SECTION 812 OF THE DELAWARE DEPARTMENT OF TRANSPORTATION STANDARD SPECIFICATIONS. ALL EXPOSED CORNERS OF CONCRETE SHALL BE CHAMFERED WITH ¾" X ¾" MILLED CHAMFER STRIPS UNLESS NOTED OTHERWISE, EXCEPT ON UNEXPOSED FOOTINGS OR WHERE INDICATED BY THE NOTATION ON THE PLANS, "DO NOT CHAMFER", NO SLIP-FORMING OF BARRIERS IS PERMITTED, UNLESS NOTED OTHERWISE.

4. BAR REINFORCEMENT
REINFORCING STEEL SHALL CONFORM TO AASHTO M31 (ASTM A615), GRADE 60. ALL REINFORCING STEEL SHALL HAVE A CLEAR COVER OF 2" UNLESS OTHERWISE SPECIFIED ON THE PLANS. FUSION-BONDED EPOXY COATED REINFORCING STEEL SHALL CONFORM TO AASHTO M284 (ASTM D3963), AND SHALL BE DENOTED WITH A SUFFIX "E" IN THE BAR MARKS.

DO NOT WELD GRADE 60 REINFORCING STEEL.

5. POST-TENSIONING STEEL
ALL POST-TENSIONING STRAND TENDONS SHALL CONSIST OF 0.6 INCH DIAMETER SEVEN WIRE UNCOATED LOW RELAXATION STRANDS CONFORMING TO AASHTO M203 (ASTM A416), GRADE 270.
DUCTS SHALL BE 4½ INCH DIA.POLYETHYLENE/POLYPROPYLENE (PE/PP) PLASTIC DUCTS.
GROUT FOR DUCTS SHALL BE IN ACCORDANCE WITH ITEM NO. 602779 "POST TENSIONING GROUT"

6. STRUCTURAL STEEL
STRUCTURAL STEEL SHALL CONFORM TO ASTM A 709, GRADE 50W, AND ASTM A 709, GRADE HPS 70W (AS NOTED), INCLUDING THE ADDITIONAL REQUIREMENTS FOR CHARPY V-NOTCH TESTING OF AASHTO M270 FOR PRIMARY LOAD CARRYING MEMBERS UNDER TENSILE STRESS. THE PRIMARY LOAD CARRYING MEMBER COMPONENTS ARE THE FLANGES, WEBS, AND SPLICE PLATES OF THE STEEL GIRDERS. THE USE OF FRACTURE CRITICAL MEMBERS IS PROHIBITED. FATIGUE CATEGORIES D, E AND F SHALL NOT BE USED IN STRESS REVERSAL OR TENSION AREAS, EXCEPT FOR TEMPORARY CONDITIONS.

△2 THE AREA IN CONTACT WITH THE INTEGRAL PIER CAP CONCRETE SHALL BE PAINTED WITH ONE COAT OF PRIMER AFTER THE SHEAR STUDS ARE INSTALLED.

TEN (10) FEET AT THE ENDS OF EACH GIRDER AND THE END CROSS FRAMES SHALL BE PAINTED WITH A URETHANE PAINT SYSTEM IN ACCORDANCE WITH SPECIAL PROVISION #605537-URETHANE PAINT SYSTEM. THE FINAL COLOR SHALL BE FEDERAL #10076 (BROWN) OF FED-STD-595B.
COST OF PAINTING SHALL BE INCIDENTAL TO ITEM 605002, STEEL STRUCTURES.
ALL BOLTS FOR SPLICE PLATES AND CROSS FRAMES SHALL BE ⅞" DIA. IN 15/16" DIA. HOLES AND CONFORM TO ASTM A325, TYPE 3, WITH THREADS EXCLUDED FROM SHEAR PLANES. BOLTED CONNECTIONS SHALL BE CLASS B SLIP CRITICAL CONNECTIONS, UNLESS NOTED ON THE PLANS.

7. SERVICEABILITY
LIVE LOAD DEFLECTION SHALL BE LIMITED TO L/800.
FOR REINFORCEMENT DISTRIBUTION REQUIREMENTS, CONSIDER CLASS 2 EXPOSURE CRITERIA FOR DECKS. ACCOMMODATION TO JACK GIRDERS FOR FUTURE BEARING REPLACEMENT HAS BEEN CONSIDERED IN THE DESIGN.

8. CONSTRUCTION JOINTS
KEYED CONSTRUCTION JOINTS SHALL BE 2" X 4" OR AS NOTED. ALL EXPOSED CONSTRUCTION JOINT EDGES SHALL HAVE A ¾" V-NOTCH, UNLESS NOTED OTHERWISE.

△3 ~~9. STABILIZING STRUCTURAL EXCAVATIONS~~
~~SHEETING AND SHORING SHALL BE REQUIRED FOR ANY EXCAVATION EXCEEDING FIVE (5) FEET IN HEIGHT, THE COST SHALL BE PAID UNDER ITEM NO. 207501. IN LIEU OF SHORING, THE CONTRACTOR MAY USE A 2:1 CUT SLOPE. NO PAYMENT SHALL BE MADE FOR ADDITIONAL EXCAVATION OR FILL OUTSIDE THE LIMITS AS DEFINED IN SECTION 207 OF THE STANDARD SPECIFICATIONS.~~

10. EXCAVATION REQUIRED TO ATTAIN THE GRADE FOR INSTALLATION OF MSE WALLS SHALL BE INCIDENTAL TO ITEM NO. 602772 - MECHANICALLY STABILIZED EARTH WALLS.

11. STRUCTURAL BACKFILL SHALL CONFORM TO THE REQUIREMENTS OF BORROW TYPE C. MSE WALL BACKFILL SHALL BE AS SPECIFIED ON THE PLANS.

12. ROADWAY CLEARANCES
A MINIMUM OF 16'-6" VERTICAL CLEARANCE SHALL BE MAINTAINED ABOVE ALL ROADWAYS.
A MINIMUM OF 2'-0" HORIZONTAL CLEARANCE SHALL BE MAINTAINED FROM THE OUTSIDE EDGE OF SHOULDER OFFSET (FACE OF CURB) TO THE FACE OF ANY OBSTRUCTION. THESE CLEARANCES APPLY AT ALL TIMES INCLUDING DURING CONSTRUCTION.

13. DECK REPLACEMENT
FUTURE DECK REPLACEMENT FOR THIS BRIDGE MUST TAKE INTO ACCOUNT THE UNBALANCED MOMENT FROM THE SUPERSTRUCTURE ON THE BEARINGS AT PIERS 1 AND 3. IT IS RECOMMENDED THAT THE DECK BE REPLACED IN A SYMMETRICAL FASHION, WORKING IN THE REGIONS AT BOTH FASCIA GIRDERS AT THE SAME TIME, AND PROGRESSING IN STAGES TOWARD THE CENTER OF THE TYPICAL SECTION. THIS APPROACH WILL ELIMINATE THE POSSIBILITY OF UPLIFT AT THE BEARINGS FOR PIERS 1 AND 3.

14. TEST PILES
PILE LENGTHS FOR ORDERING PURPOSES SHALL BE DETERMINED BY TEST PILES. A MINIMUM OF ONE (1) PILE PER SUBSTRUCTURE, AS SHOWN ON THE PLANS, SHALL BE DYNAMICALLY TESTED BY THE CONTRACTOR IN ACCORDANCE WITH SPECIAL PROVISION 619519. TEST AND PRODUCTION PILE RE-STRIKES WILL BE PAID AS FOLLOWS:

A). ALL TEST PILE(S) WILL BE RESTRUCK AND DYNAMICALLY TESTED BY THE CONTRACTOR. THE TEST PILE RESTRIKES SHALL BE INCIDENTAL TO ITEM NO. 619519 DYNAMIC PILE TESTING BY CONTRACTOR PROVIDED THAT THEY ARE PERFORMED WITHIN FIVE (5) CALENDAR DAYS FROM INITIAL DRIVE.

B). AN ADDITIONAL PAYMENT WILL BE MADE TO THE CONTRACTOR IF HE IS DIRECTED BY THE ENGINEER TO WAIT AND RESTRIKE THE TEST PILE MORE THAN FIVE (5) CALENDAR DAYS AFTER INITIAL DRIVE. THE CONTRACTOR SHALL BE COMPENSATED AT THE FIXED PRICE OF $1,000.00 PER CALENDAR DAY FOR EVERY DAY, AFTER THE FIFTH CALENDAR DAY, UNDER ITEM NO. 619502 TEST PILE RESTRIKE. MULTIPLE TEST PILE RESTRIKES OCCURRING ON THE SAME DAY WILL ONLY BE PAID FOR AS ONE CALENDAR DAY. NO ADDITIONAL COMPENSATION WILL BE MADE REGARDLESS OF THE NUMBER OF TEST PILE RESTRIKES PERFORMED THAT DAY.

C). RESTRIKES ON PRODUCTION PILES WHICH ARE DESIGNATED TO BE DYNAMICALLY TESTED WILL NOT BE PAID UNDER ITEM NO. 619501 PRODUCTION PILE RESTRIKE. THESE PRODUCTION PILE RESTRIKES ARE INCIDENTAL TO ITEM NO. 619519 DYNAMIC PILE TESTING BY CONTRACTOR.

THE DEPARTMENT RESERVES THE RIGHT TO PERFORM DYNAMIC TESTING OF RESTRIKES.

15. THE CONCRETE PIER CAPS SHOWN ON THE PLANS SHALL BE USED. NO OTHER ALTERNATES WILL BE CONSIDERED.

△3 16. MASS CONCRETE
CONCRETE ELEMENTS LISTED BELOW ARE DESIGNED AS MASS CONCRETE. SEE SPECIAL PROVISIONS.

PIER 1, PIER 2 AND PIER 3 POST-TENSIONED CAP

BRIDGE LEGAL LOAD RATING (TONS)
RAMP A OVER I-95

TRUCK TYPE	RATING FACTOR	SAFE LOAD CAPACITY
HS-20	2.13	76.6
S220	3.91	78.2
S327	3.08	83.1
S335	2.36	82.6
S437	2.28	83.2
T330	2.95	88.5
T435	2.60	91.0
T540	2.27	90.8

BRIDGE DESIGN LOAD RATING:
INVENTORY = 1.35
OPERATING = 1.75

NOTE:

LOAD RATING IS IN ACCORDANCE WITH THE LOAD AND RESISTANCE FACTOR RATING (LRFR) METHOD.

CROSS REFERENCE NOTE:

FOR MSE WALL NOTES, SEE DWG. S1-13 & S1-14.

UNOFFICIAL WEBSITE COPY

O:\20082687-XM\CAD\Bridge\BR-ST\gen01_BR-ST_srf.dgn
2/24/2011
Steve_Lambert

DELAWARE DEPARTMENT OF TRANSPORTATION

ADDENDUMS / REVISIONS	
ADDENDUM NO. △2 REV. NOTE 6, 01/26/11, SAM	
ADDENDUM NO. △3 REV. NOTE 3, DELETED NOTE 9, ADDED	
NOTE 16, 02/18/11, SAM	

SR1 / I-95 INTERCHANGE

CONTRACT	BRIDGE NO.	1-716B
28-090-03	DESIGNED BY: R.F. KIRCHNER	
COUNTY	CHECKED BY: J.S. LI	
NEW CASTLE		

RAMP A OVER I-95
GENERAL NOTES

SHEET NO.	TOTAL SHTS.
S1-2	196 / 803

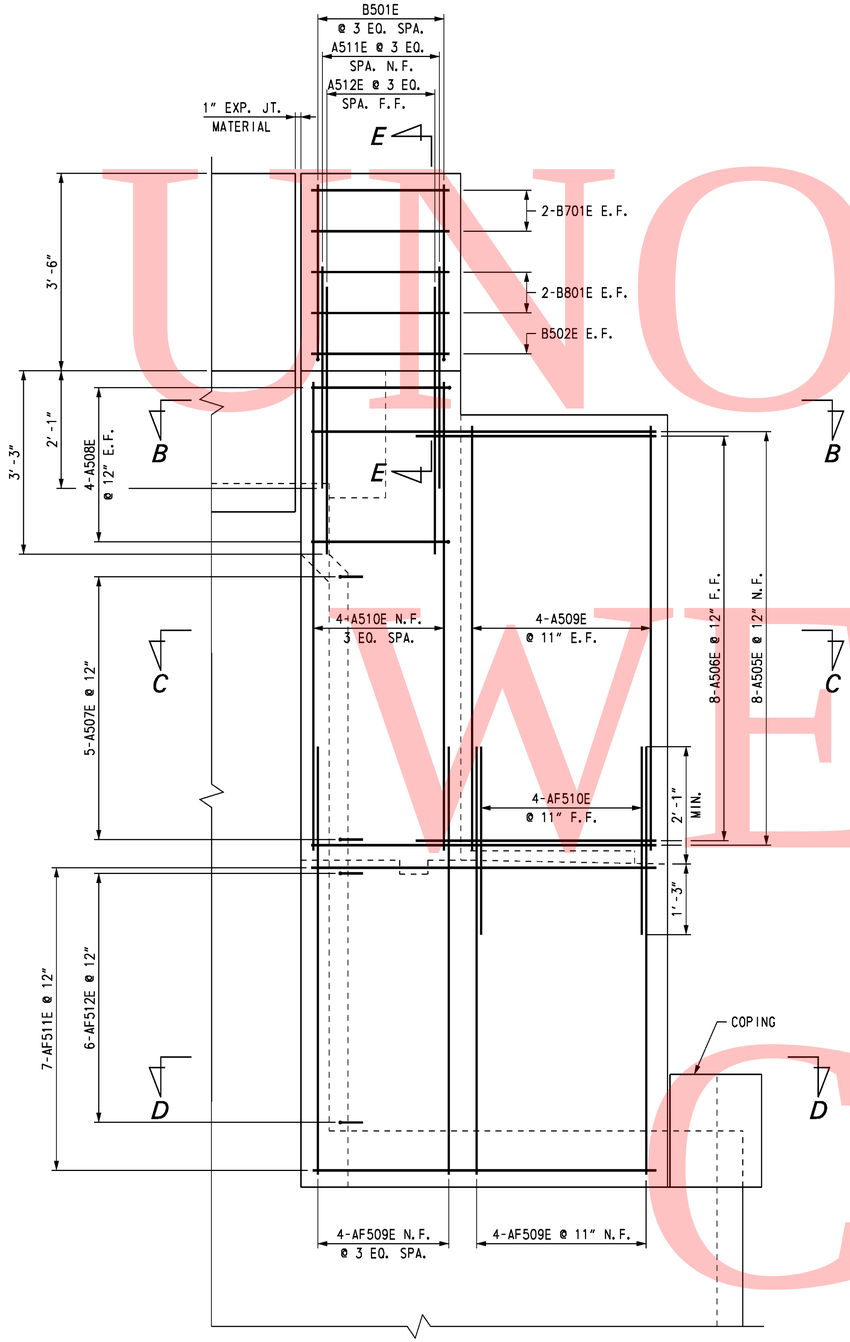

WING WALL 11 SIDE ELEVATION

SCALE: ¾" = 1'-0"

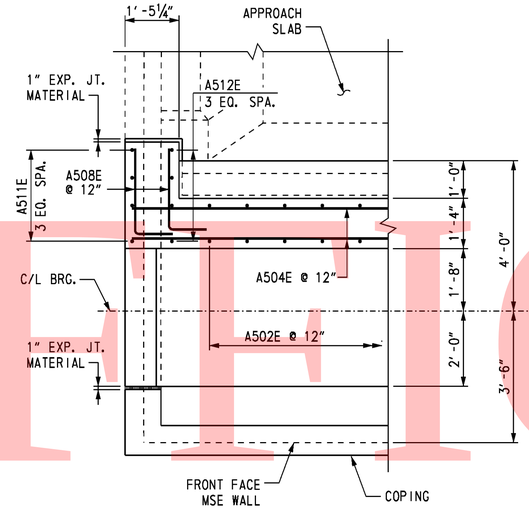

SECTION B-B

SCALE: ½" = 1'-0"

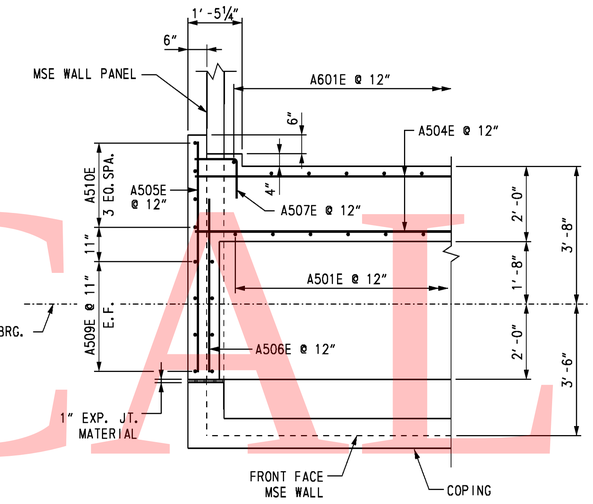

SECTION C-C

SCALE: ½" = 1'-0"

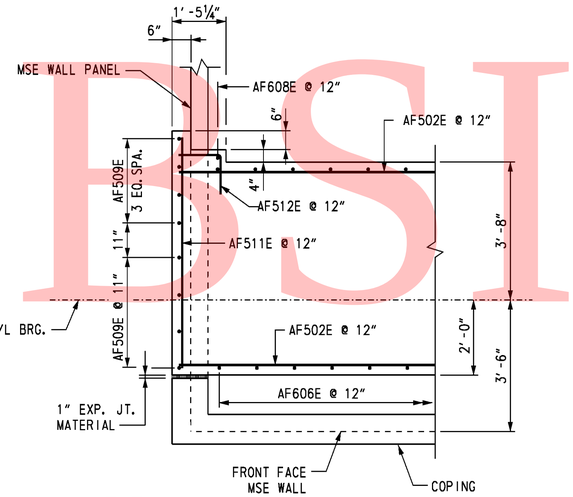

SECTION D-D

SCALE: ½" = 1'-0"

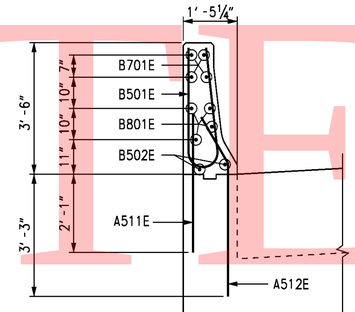

SECTION E-E

SCALE: ½" = 1'-0"

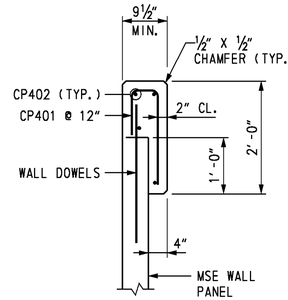

⚠3 COPING DETAIL

SCALE: ¾" = 1'-0"

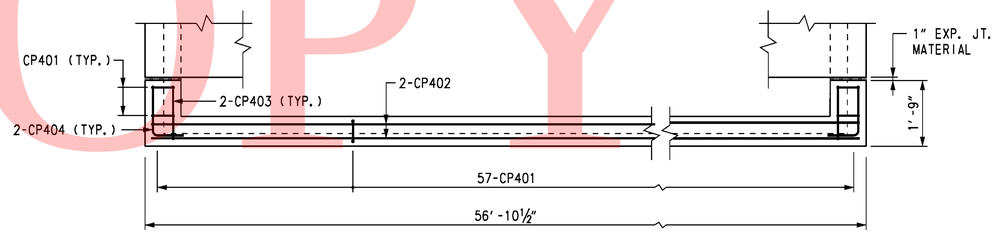

⚠3 ABUTMENT MSE WALL COPING PLAN

SCALE: ½" = 1'-0"

CROSS REFERENCE NOTES:

1. FOR ABUTMENT A PLAN AND ELEVATION, SEE DWG. S1-5.
2. FOR ABUTMENT A ELEVATION REINFORCEMENT DETAILS, SEE DWG. S1-7.
3. FOR REINFORCING BAR LIST, SEE DWG. S1-15.

UNOFFICIAL WEBSITE COPY

O:\20832687-XM\CAD\Bridge\BR-S1\ab05_BR-S1_sr1.dgn
2/10/2011
Steve_Lambert

DELAWARE
DEPARTMENT OF TRANSPORTATION

ADDENDUMS / REVISIONS	
ADDENDUM NO. ⚠3 ADDED COPING REINF., 02/18/11, RFK	

SR1 / I-95 INTERCHANGE

CONTRACT	BRIDGE NO.	1-716B	RAMP A OVER I-95
28-090-03	DESIGNED BY: K.D. BEAVER		ABUTMENT A REINFORCEMENT 2
COUNTY	CHECKED BY: J. S. LI		
NEW CASTLE			

S1-8	
SHEET NO.	202
TOTAL SHTS.	803

UNOFFICAL WEBSITE COPY

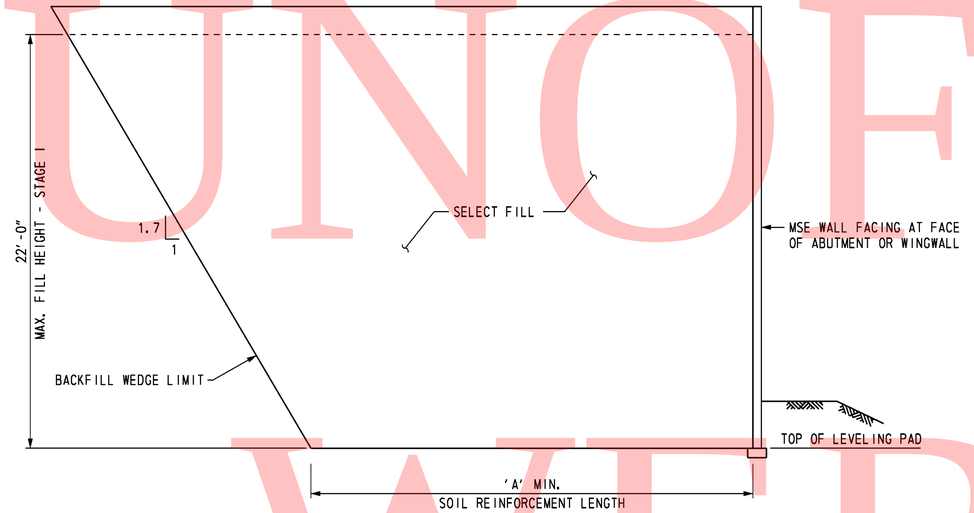

SOIL PROFILE SECTION
ABUTMENT A AND WINGWALLS I AND II

NOT TO SCALE

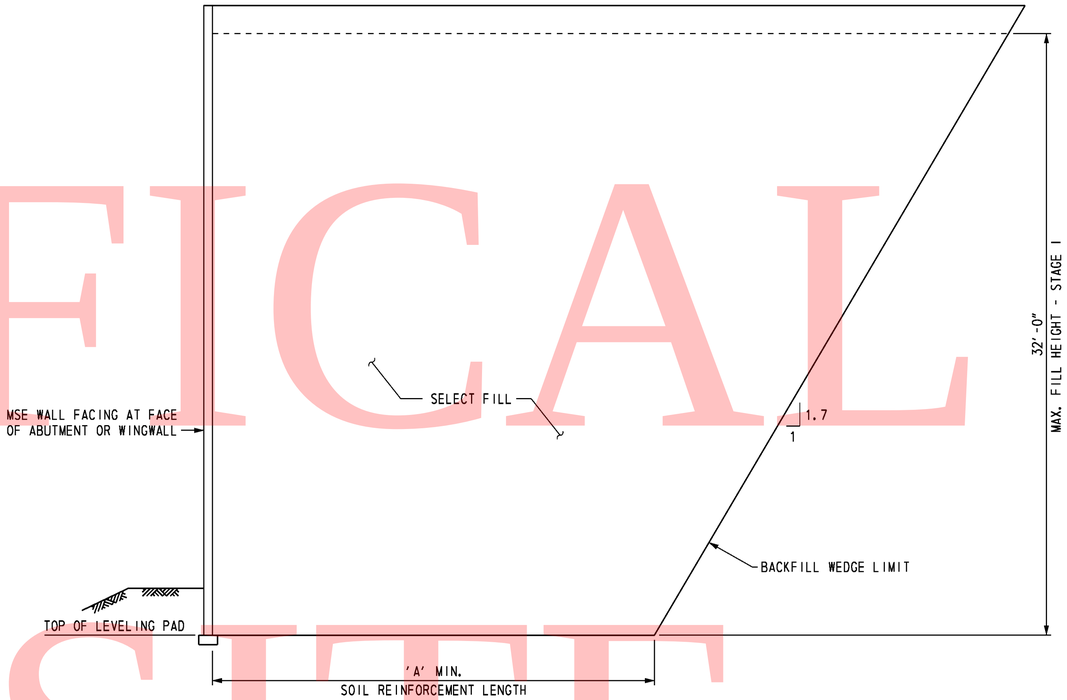

SOIL PROFILE SECTION
ABUTMENT B AND WINGWALLS III AND IV

NOT TO SCALE

MINIMUM REINFORCED ZONE WIDTH (A) FEET	
ABUTMENT A	
FACE OF ABUTMENT	33.0
3 WINGWALLS I AND ~~III~~ II	23.5
ABUTMENT B	
FACE OF ABUTMENT	38.0
3 ~~WINGWALLS III AND IV~~	~~38.0~~

SOIL PROPERTIES				
SOIL TYPE	UNIT WEIGHT (PCF)	DRAINED ANGLE OF FRICTION (DEGREES)	UNDRAINED SHEAR (PSF)	FACTORED BEARING RESISTANCE (KSF)
SELECT FILL	125	34	-	-
FOUNDATION SOIL:				
ABUTMENT A	70	27	1000	4.0
ABUTMENT B	70	28	1000	6.0

FOUNDATION NOTES

THE FACTORED BEARING RESISTANCE SHALL BE VERIFIED PRIOR TO CONSTRUCTION OF THE MSE WALL.

THE INTERNAL STABILITY OF THE MSE WALL SHALL BE DESIGNED BY THE CONTRACTOR USING THE SOIL PARAMETERS PROVIDED FOR EACH STRUCTURE LOCATION. THE INTERNAL STABILITY CALCULATIONS SHALL BE SIGNED AND SEALED BY A PROFESSIONAL ENGINEER LICENSED IN THE STATE OF DELAWARE AS INDICATED IN THE PROJECT SPECIFICATIONS.

ISOLATED AREAS OF EXISTING FILL MAY BE ENCOUNTERED DURING CONSTRUCTION OF THIS MSE WALL. EXISTING FILL SHALL BE UNDERCUT TO EXPOSE UNDISTURBED NATURAL SOIL. UNDERCUTTING AND BACKFILLING WILL BE MEASURED AND PAID IN ACCORDANCE WITH THE SPECIFICATIONS.

A MINIMUM 7-DAY QUARANTINE PERIOD SHALL BE REQUIRED AFTER CONSTRUCTION OF THE WALL TO THE "MAX. FILL HEIGHT - STAGE 1" INDICATED ON THE SOIL PROFILE SECTION. NO FURTHER FILL SHALL BE PLACED UNTIL AUTHORIZED BY THE ENGINEER. ONCE AUTHORIZATION IS GIVEN, FILL SHALL BE PLACED IN ADDITIONAL INCREMENTS OF 5 FEET IN HEIGHT, WITH THE SAME QUARANTINE PERIOD AND AUTHORIZATION REQUIRED AT EACH
2 INCREMENT. AN ADDITIONAL QUARANTINE PERIOD OF ~~30 TO~~ 60 DAYS IS REQUIRED AFTER CONSTRUCTION OF THE MSE WALL TO ITS FULL HEIGHT. NO FURTHER CONSTRUCTION SHALL BE PERMITTED UNTIL AUTHORIZED BY THE ENGINEER. A TOTAL ESTIMATED SETTLEMENT OF APPROXIMATELY FOUR (4) TO FIVE (5) INCHES IS ANTICIPATED.

3 FOR WINGWALLS III AND IV, SOIL REINFORCEMENT LENGTH RATIO SHALL BE L/H=1.2, AND LESS THAN (A)=38.0 FEET.

O:\20823687-XMK\CAD\Bridge\BR-ST\rd04_BR-ST_sr1.dgn
2/10/2011
Steve_Lambert

S1-14

DELAWARE
DEPARTMENT OF TRANSPORTATION

ADDENDUMS / REVISIONS	
ADDENDUM NO. 2 REV. QUARANTINE PERIOD, 01/26/11, RFK	
ADDENDUM NO. 3 REV. WINGWALL DESIGNATION AND BACKFILL PROFILE, 02/18/11, RFK	

SR1 / I-95 INTERCHANGE

CONTRACT	BRIDGE NO. 1-716B	RAMP A OVER I-95 WINGWALL DETAILS 2	SHEET NO.
28-090-03	DESIGNED BY: R. F. KIRCHNER		208
COUNTY			TOTAL SHTS.
NEW CASTLE	CHECKED BY: G.P. MISTRY		803

REINFORCING BAR LIST

ABUTMENT A

MARK	LENGTH	NO. BARS	TYPE	A	B	C	D	E	G	H	J	K	O	R	REMARKS
AP401E	6′-7″	114	T3									1′-8″	1′-7″		
AP801E	18′-11″	48	37	0′-11″	18′-0″						0′-8″				
AF501E	28′-4″	12	STR.												
AF502E	29′-4″	12	STR.												
AF503E	21′-1″	2	STR.												
AF504E	8′-3″	2	STR.												
AF505E	10′-4″	6	STR.												
AF506E	12′-9″	24	36	0′-10″	11′-11″										
AF507E	8′-11″	6	36	0′-10″	8′-1″										
AF508E	3′-8″	56	STR.												
AF509E	8′-2″	16	STR.												
AF510E	4′-6″	8	STR.												
AF511E	6′-2″	14	STR.												
AF512E	2′-2″	12	17		1′-1″	1′-1″									
AF601E	17′-8″	8	T2	1′-0″	5′-4″	2′-6″	5′-4″	2′-6″	1′-0″						
AF602E	18′-6″	10	T2	1′-0″	5′-4″	2′-11″	5′-4″	2′-11″	1′-0″						
AF603E	19′-6″	10	T2	1′-0″	5′-4″	3′-5″	5′-4″	3′-5″	1′-0″						
AF604E	20′-8″	10	T2	1′-0″	5′-4″	4′-0″	5′-4″	4′-0″	1′-0″						
AF605E	21′-9″	10	T2	1′-0″	5′-4″	4′-7″	5′-4″	4′-7″	1′-0″						
AF606E	23′-4″	8	T2	1′-0″	5′-4″	5′-4″	5′-4″	5′-4″	1′-0″						
AF607E	4′-3″	54	STR.												
AF608E	7′-7″	2	STR.												
A501E	8′-4″	56	STR.												
A502E	7′-1	54	17		3′-0″	1′-0″	3′-1″								
A503E	3′-9″	54	16		1′-6″	0′-10″	1′-5″			1′-0″		1′-0″			
A504E	29′-4″	40	STR.												
A505E	6′-2″	16	STR.												
A506E	4′-9″	16	STR.												
A507E	2′-2″	10	17		1′-1″	1′-1″									
A508E	3′-3″	16	36	1′-0″	2′-3″										
A509E	7′-1″	16	STR.												
A510E	9′-8″	8	STR.												
A511E	3′-10″	8	STR.												
A512E	4′-8″	8	16			3′-5″	1′-3″			1′-0¼″		0′-8¾″			
A601E	5′-11″	56	STR.												
B501E	6′-9″	8	H1		2′-9½″	1′-2″	2′-9½″			0′-5″			0′-4½″		
B502E	2′-0″	4	STR.												
B701E	2′-0″	8	STR.												
B801E	2′-0″	8	STR.												
3 CP401	2′-9½″	61	17		1′-8″	0′-5½″	0′-8″								
3 CP402	56′-6″	4	STR.												
3 CP403	1′-5″	4	STR.												
3 CP404	2′-5″	4	17		1′-0″	1′-5″									

ABUTMENT B

MARK	LENGTH	NO. BARS	TYPE	A	B	C	D	E	G	H	J	K	O	R	REMARKS
AP431E	6′-7″	114	T3									1′-8″	1′-7″		
AP831E	18′-11″	48	37	0′-11″	18′-0″						0′-8″				
AF531E	29′-6″	6	STR.												
AF532E	27′-1″	6	STR.												
AF533E	30′-7″	4	STR.												
AF534E	28′-1″	6	STR.												
AF535E	11′-11″	2	STR.												
AF536E	18′-3″	2	STR.												
AF537E	8′-1″	2	STR.												
AF538E	20′-4″	6	STR.												
AF539E	12′-9″	6	36	0′-10″	11′-11″										
AF540E	12′-1″	6	STR.												
AF541E	12′-9″	6	36	0′-10″	11′-11″										
AF542E	8′-11″	6	36	0′-10″	8′-1″										
AF543E	3′-6″	56	STR.												
AF544E	7′-0″	16	STR.												
AF545E	4′-4″	8	STR.												
AF546E	6′-2″	14	STR.												
AF547E	2′-2″	12	17		1′-1″	1′-1″									
AF550E	5′-9″	25	17		1′-7½″	2′-6″	1′-7½″								
AF551E	6′-9″	20	17		1′-7½″	3′-6″	1′-7½″								
AF631E	17′-8″	18	T2	1′-0″	5′-4″	2′-6″	5′-4″	2′-6″	1′-0″						
AF632E	18′-10″	20	T2	1′-0″	5′-4″	3′-1″	5′-4″	3′-1″	1′-0″						
AF633E	20′-4″	10	T2	1′-0″	5′-4″	3′-10″	5′-4″	3′-10″	1′-0″						
AF634E	21′-6″	8	T2	1′-0″	5′-4″	4′-5″	5′-4″	4′-5″	1′-0″						
AF635E	4′-2″	54	STR.												
AF636E	6′-8″	2	STR.												
A531E	8′-4″	56	STR.												
A532E	7′-1	54	17		3′-0″	1′-0″	3′-1″								
A533E	3′-9″	54	16		1′-6″	0′-10″	1′-5″				1′-0″		1′-0″		
A534E	30′-7″	20	STR.												
A535E	28′-2″	20	STR.												
A536E	6′-2″	16	STR.												
A537E	4′-9″	16	STR.												
A538E	2′-2″	10	17		1′-1″	1′-1″									
A539E	3′-3″	16	36	1′-0″	2′-3″										
A540E	7′-2″	16	STR.												
A541E	9′-7″	8	STR.												
A542E	3′-10″	8	STR.												
A543E	4′-8″	8	16			3′-5″	1′-3″				1′-0¼″		0′-8¾″		
A631E	5′-10″	56	STR.												
B531E	6′-9″	8	H1		2′-9½″	1′-2″	2′-9½″				0′-5″			0′-4½″	
B532E	2′-0″	4	STR.												
B731E	2′-0″	8	STR.												
B831E	2′-0″	8	STR.												
3 CP401	2′-9½″	61	17		1′-8″	0′-5½″	0′-8″								
3 CP402	56′-6″	4	STR.												
3 CP403	1′-5″	4	STR.												
3 CP404	2′-5″	4	17		1′-0″	1′-5″									

BENDING DIAGRAMS

ALL DIMENSIONS ARE FROM OUT TO OUT.

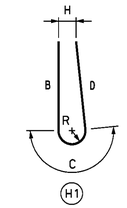

UNOFFICIAL WEBSITE COPY

O:\20832887-XMI\CAD\Bridge\BR-ST\sb08_BR-ST_sr1.dgn
2/10/2011
Steve_Lambert

S1-15

DELAWARE DEPARTMENT OF TRANSPORTATION

ADDENDUMS / REVISIONS

ADDENDUM NO.		
3	ADDED COPING REINF., 02/18/11, RFK	

SR1 / I-95 INTERCHANGE

CONTRACT	BRIDGE NO.	1-716B
28-090-03	DESIGNED BY: K.D. BEAVER	
COUNTY		
NEW CASTLE	CHECKED BY: J.S. LI	

RAMP A OVER I-95

ABUTMENTS A AND B REINFORCING BAR LIST

SHEET NO.	TOTAL SHTS.
209	803

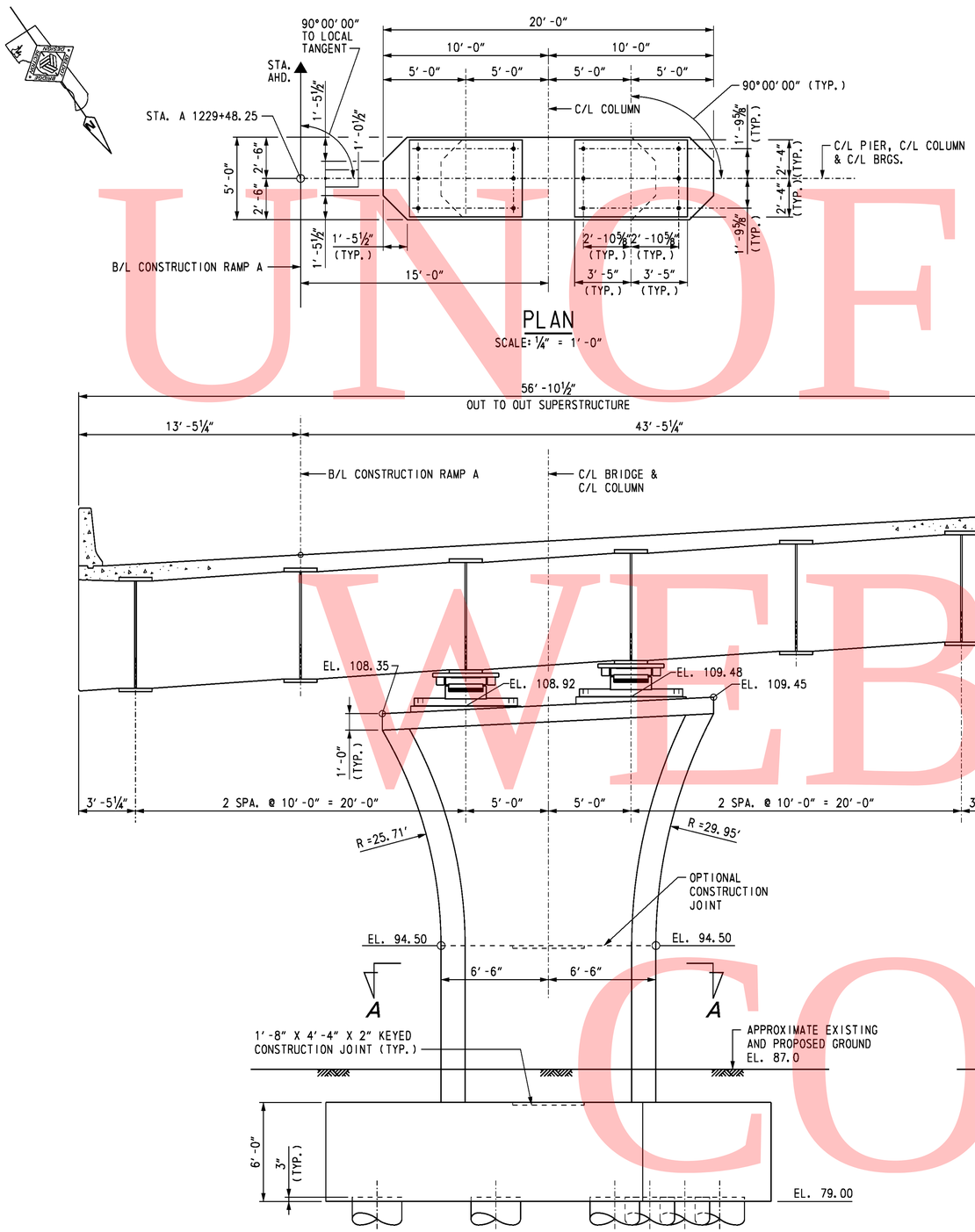

PLAN

SCALE: ¼" = 1'-0"

ELEVATION - PIER 1

SCALE: ¼" = 1'-0"

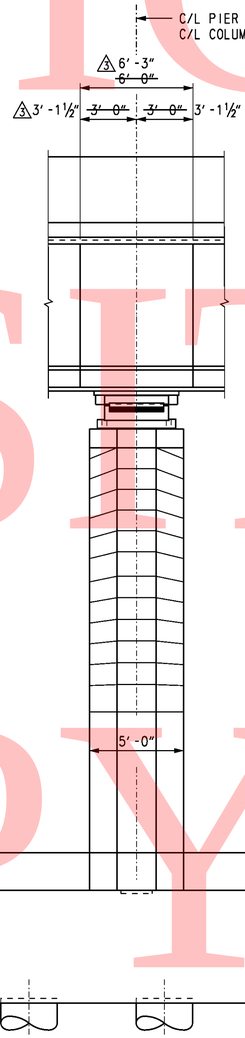

END VIEW

SCALE: ¼" = 1'-0"

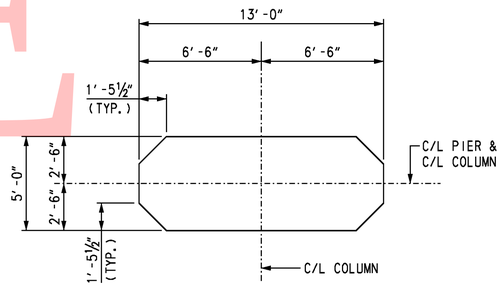

SECTION A-A

SCALE: ¼" = 1'-0"

CROSS REFERENCE NOTES:

1. FOR BRIDGE PLAN AND ELEVATION, SEE DWG. S1-1.
2. FOR PIER FOUNDATION PLAN, SEE DWG. S1-16.
3. FOR INTEGRAL PIER CAP, REINFORCEMENT DETAILS, SEE DWGS. S1-20 & S1-21.
4. FOR PIER COLUMN AND FOOTING REINFORCEMENT DETAILS, SEE DWGS. S1-22 & S1-23.

UNOFFICAL WEBSITE COPY

O:\20822687-XMI\CAD\Bridge\BR-ST\prt02_BR-ST_sr1.dgn
2/10/2011
Steve_Lambert

DELAWARE DEPARTMENT OF TRANSPORTATION

ADDENDUMS / REVISIONS	
ADDENDUM NO. △3 REV. CAP DIMENSIONS, 02/18/11, RFK	

SR1 / I-95 INTERCHANGE

CONTRACT	BRIDGE NO.	1-716B	SHEET NO.
28-090-03	DESIGNED BY: K.D. BEAVER		211
COUNTY			TOTAL SHTS.
NEW CASTLE	CHECKED BY: R. F. KIRCHNER		803

RAMP A OVER I-95

PIER 1 PLAN AND ELEVATION

S1-17

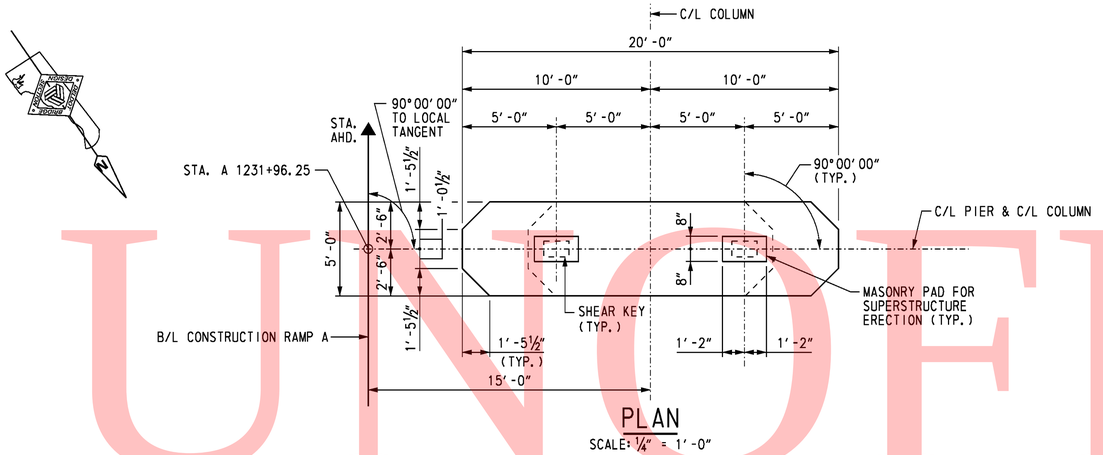

PLAN

SCALE: ¼" = 1'-0"

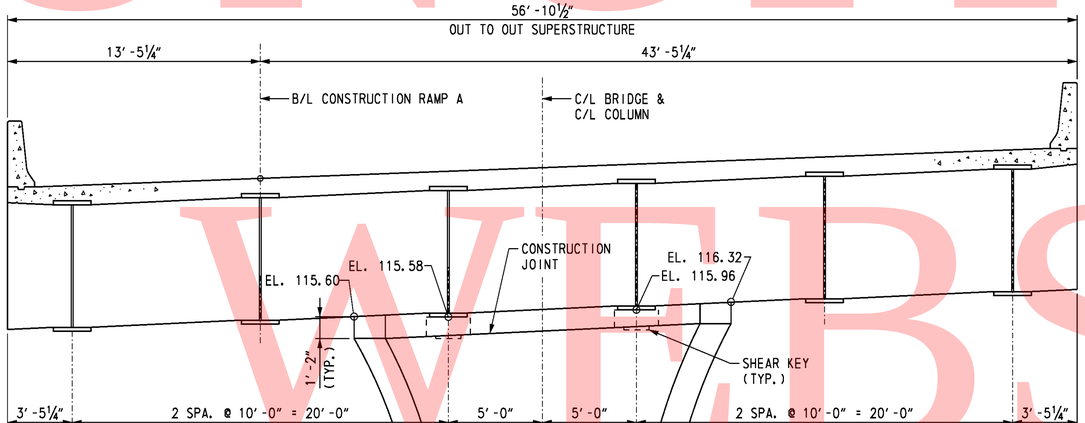

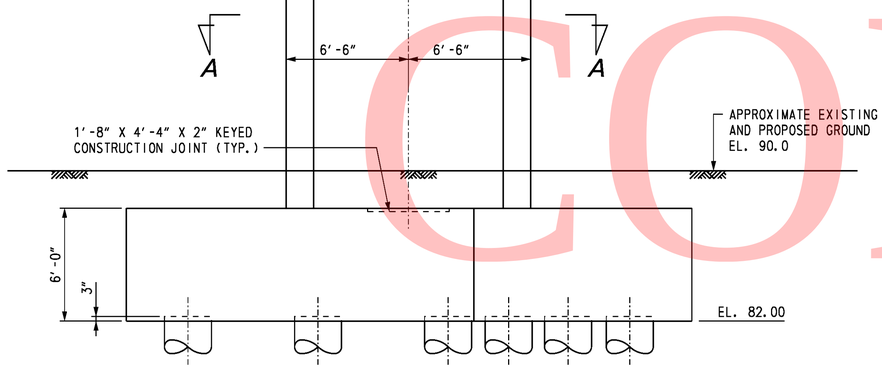

ELEVATION - - PIER 2

SCALE: ¼" = 1'-0"

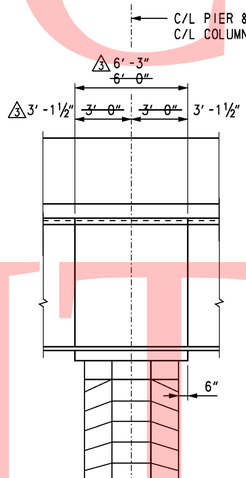

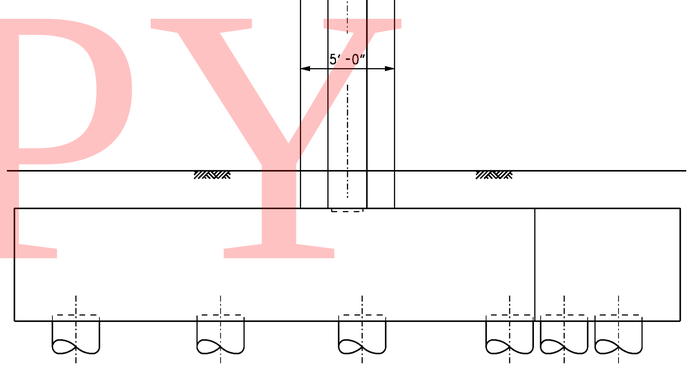

END VIEW

SCALE: ¼" = 1'-0"

NOTE:

CONCRETE FOR MASONRY PAD SHALL BE "PIER ABOVE FOOTING" CONCRETE. AS AN ALTERNATE, A NON-SHRINK GROUT (f'c = 4,500 PSI) WITH 3/8" AGGREGATE MAY BE UTILIZED FOR THE MASONRY PAD CONCRETE. CONCRETE FOR COLUMN OUTSIDE OF MASONRY PAD IN TOP 1'-2" REGION SHALL BE SAME AS "POST TENSIONED PIER CAP" CONCRETE.

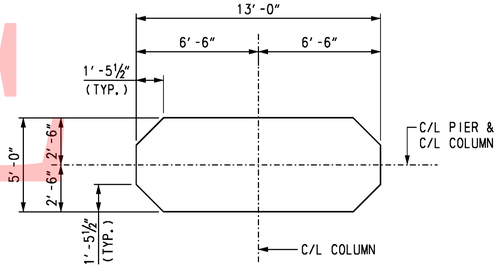

SECTION A-A

SCALE: ¼" = 1'-0"

CROSS REFERENCE NOTES:

1. FOR BRIDGE PLAN AND ELEVATION, SEE DWG. S1-1.
2. FOR PIER FOUNDATION PLAN, SEE DWG. S1-16.
3. FOR INTEGRAL PIER CAP, REINFORCEMENT DETAILS, SEE DWGS. S1-24 & S1-25.
4. FOR PIER COLUMN AND FOOTING REINFORCEMENT DETAILS, SEE DWGS. S1-26 & S1-27.

UNOFFICAL WEBSITE COPY

O:\20832687-XM\CAD\Bridge\BR-S1\pr03_BR-S1_sr1.dgn
2/10/2011
Steve_Lambert

DELAWARE DEPARTMENT OF TRANSPORTATION

ADDENDUMS / REVISIONS	
ADDENDUM NO. 3 REV. CAP DIMENSIONS, 02/18/11, RFK	

SR1 / I-95 INTERCHANGE

CONTRACT	BRIDGE NO.	1-716B
28-090-03	DESIGNED BY: K.D. BEAVER	
COUNTY	CHECKED BY: R.F. KIRCHNER	
NEW CASTLE		

RAMP A OVER I-95

PIER 2 PLAN AND ELEVATION

S1-18	
SHEET NO.	212
TOTAL SHTS.	803

UNOFFICAL WEBSITE COPY

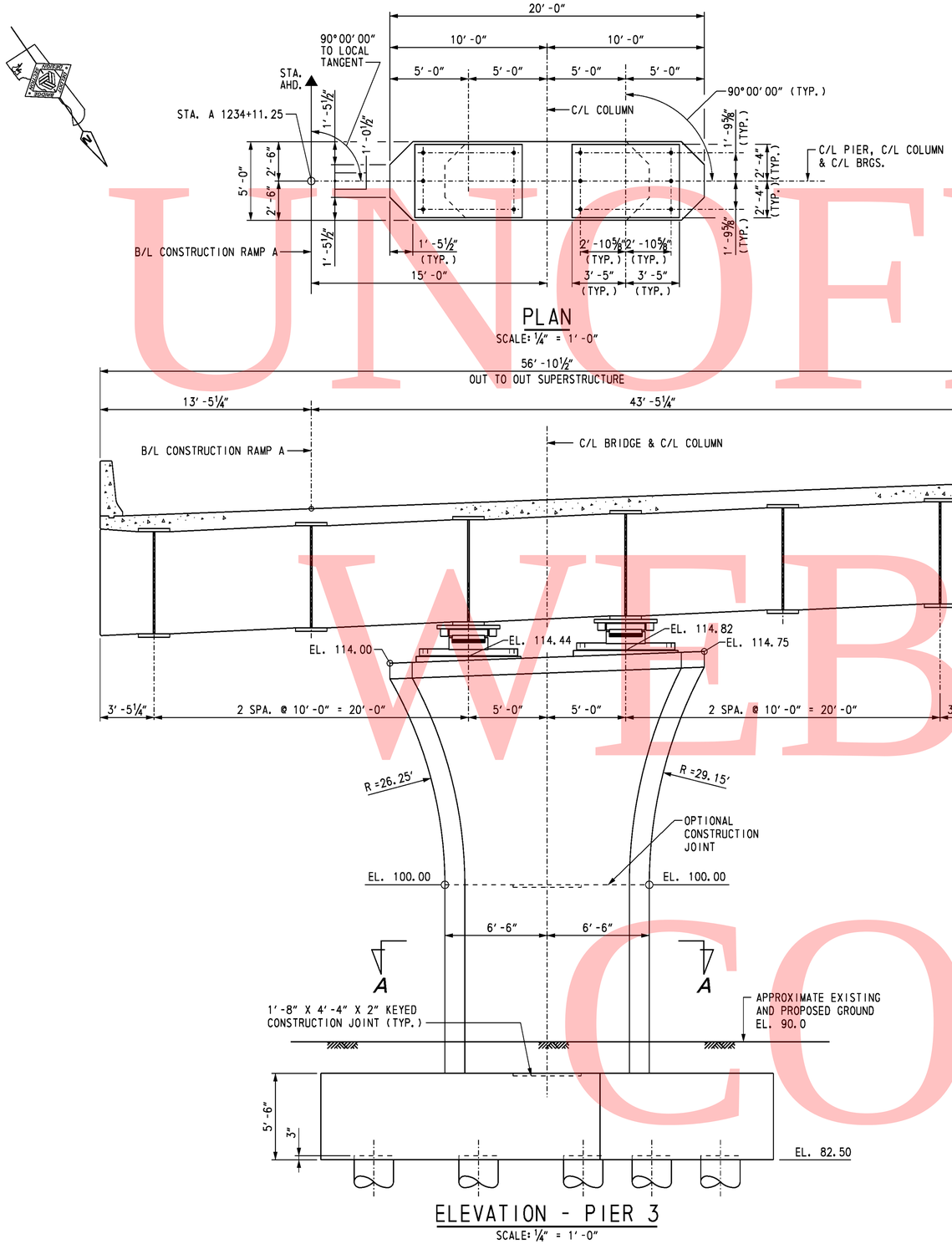

PLAN

SCALE: ¼″ = 1′-0″

ELEVATION - PIER 3

SCALE: ¼″ = 1′-0″

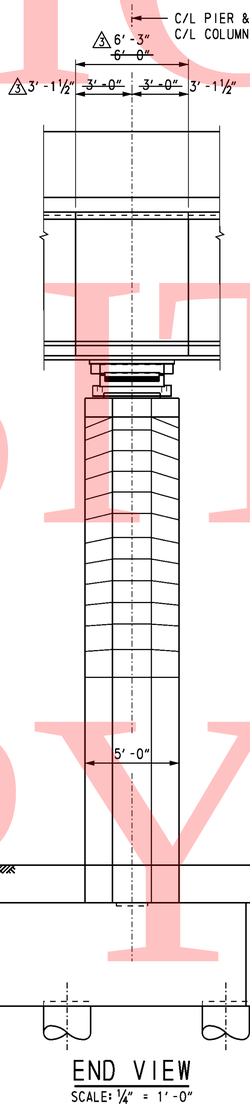

END VIEW

SCALE: ¼″ = 1′-0″

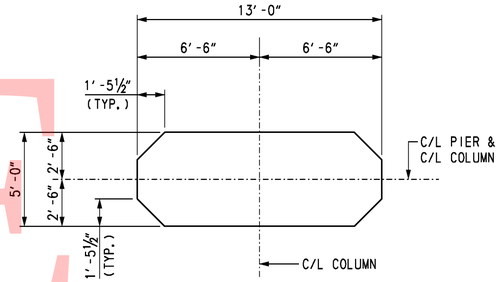

SECTION A-A

SCALE: ¼″ = 1′-0″

CROSS REFERENCE NOTES:

1. FOR BRIDGE PLAN AND ELEVATION, SEE DWG. S1-1.
2. FOR PIER FOUNDATION PLAN, SEE DWG. S1-16.
3. FOR INTEGRAL PIER CAP, REINFORCEMENT DETAILS, SEE DWGS. S1-28 & S1-29.
4. FOR PIER COLUMN AND FOOTING REINFORCEMENT DETAILS, SEE DWGS. S1-30 & S1-31.

O:\20832687-XWI\CAD\Bridge\BR-S1\pr04_BR-S1_sr1.dgn
2/10/2011
Steve_Lambert

DELAWARE
DEPARTMENT OF TRANSPORTATION

ADDENDUMS / REVISIONS	
ADDENDUM NO. 3 REV. CAP DIMENSIONS, 02/18/11, RFK	

SR1 / I-95 INTERCHANGE

CONTRACT	BRIDGE NO.	1-716B	RAMP A OVER I-95
28-090-03	DESIGNED BY: K.D. BEAVER		PIER 3
COUNTY	CHECKED BY: R. F. KIRCHNER		PLAN AND ELEVATION
NEW CASTLE			

S1-19
SHEET NO.
213
TOTAL SHTS.
803

UNOFFICIAL WEBSITE COPY

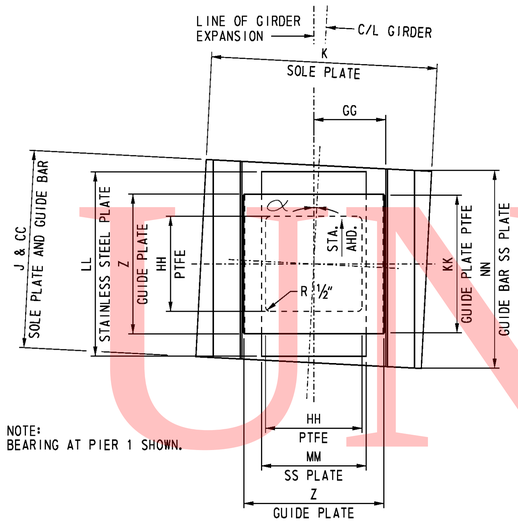

NOTE:
BEARING AT PIER 1 SHOWN.

SECTION A-A
NOT TO SCALE

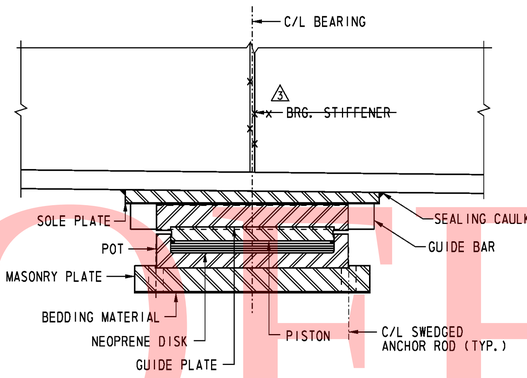

SECTION C-C
NOT TO SCALE

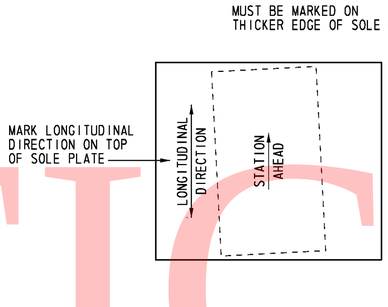

PLAN SIDE VIEW

SOLE PLATE DETAIL
NOT TO SCALE

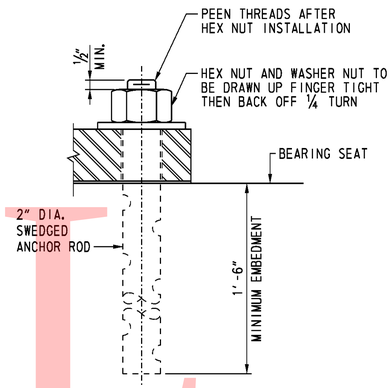

ANCHOR ROD DETAIL
SCALE: 3" = 1'-0"

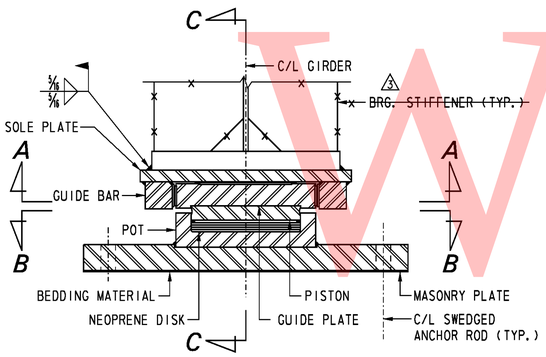

ELEVATION
NOT TO SCALE

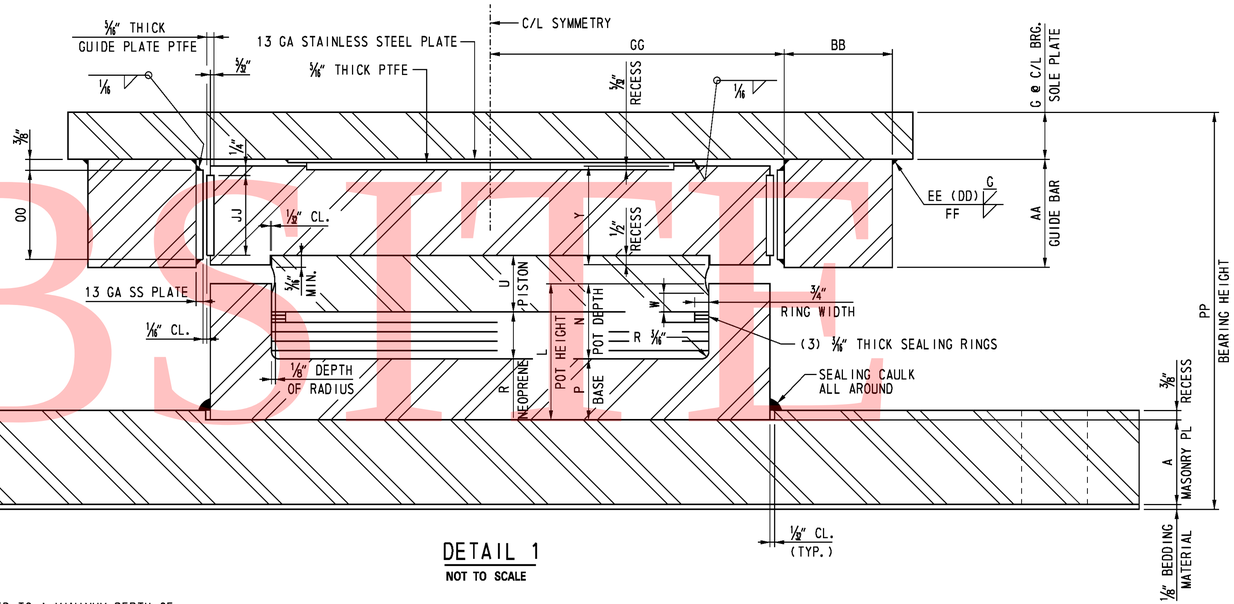

DETAIL 1
NOT TO SCALE

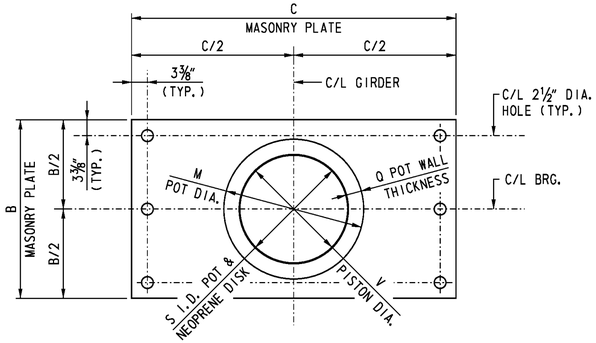

SECTION B-B
NOT TO SCALE

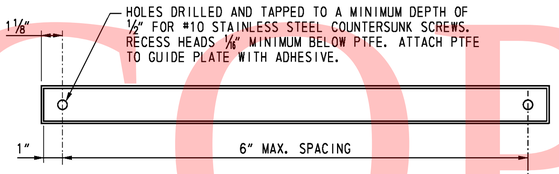

GUIDE PLATE PTFE DETAIL
NOT TO SCALE

NOTE:

SOLE PLATE THICKNESS SHALL NOT BE LESS THAN ¾" INCH.

CROSS REFERENCE NOTE:

FOR BEARING NOTES AND LOCATIONS, SEE DWG. S1-34.

LOCATION	SERVICE VERTICAL LOAD (kips)	STRENGTH VERTICAL LOAD (kips)	STRENGTH HORIZONTAL LOAD (kips)	∝	MASONRY PLATE A	MASONRY PLATE B	MASONRY PLATE C	SOLE PLATE F	SOLE PLATE G	SOLE PLATE H	SOLE PLATE J	SOLE PLATE K
PIER 1 - G3 & G4	3650	5400	485	3°-35'-21" LT	5¼"	50"	76"	2¼"	3"	3¾"	54"	62½"
PIER 3 - G3 & G4	3650	5400	485	1°-39'-53" RT	5¼"	50"	76"	3⅛"	3"	2⅝"	54"	62½"

LOCATION	GUIDE BARS AA	BB	CC	DD	EE	FF	GG	PTFE HH	JJ	KK	STAINLESS STEEL LL	MM	NN	OO	* BEARING HEIGHT PP
PIER 1 - G3 & G4	5⅜"	5⅜"	54"	¾"	⅞"	¾"	23¼"	32½"	4⅝"	45¾"	50¾"	33½"	53¼"	4⅞"	24⅛"
PIER 3 - G3 & G4	5⅜"	5⅜"	54"	¾"	⅞"	¾"	23¼"	32½"	4⅝"	45¾"	50¾"	33½"	53¼"	4⅞"	24⅛"

LOCATION	POT L	M	N	P	Q	NEOPRENE DISC R	S	PISTON U	V	W	GUIDE PLATE Y	Z
PIER 1 - G3 & G4	10¼"	46"	5½"	4¾"	4¾"	3¾"	36½"	3⅛"	36.460	1⅛"	5⅛"	46"
PIER 3 - G3 & G4	10¼"	46"	5½"	4¾"	4¾"	3¾"	36½"	3⅛"	36.460	1⅛"	5⅛"	46"

* BEARING HEIGHT INCLUDES ⅛" BEDDING MATERIAL.
BEARING HEIGHT MEASURED AT C/L BEARING

S1-37

DELAWARE DEPARTMENT OF TRANSPORTATION

ADDENDUMS / REVISIONS

ADDENDUM NO.	
3	DELETED BRG. STIFFENER, 02/18/11, RFK

SR1 / I-95 INTERCHANGE

CONTRACT	BRIDGE NO.	1-716B
28-090-03	DESIGNED BY: M.E. PEAL	
COUNTY: NEW CASTLE	CHECKED BY: G. P. MISTRY	

RAMP A OVER I-95

GUIDED EXPANSION BEARING AT PIER 1 AND 3

SHEET NO.	231
TOTAL SHTS.	803

O:\20823687-XW\CAD\Bridge\BR-S1\bd05_BR-S1_sr1.dgn
2/10/2011
Steve_Lambert

GENERAL NOTES

1. DESIGN SPECIFICATIONS
AASHTO LRFD BRIDGE DESIGN SPECIFICATIONS, 4th EDITION WITH 2009 INTERIM REVISIONS.
DELAWARE DEPARTMENT OF TRANSPORTATION BRIDGE DESIGN MANUAL, MAY 2005 INCLUDING LATEST REVISIONS. ANSI/AASHTO/AWS D1.5 BRIDGE WELDING CODE.

2. LOADING
UNIT WEIGHTS OF MATERIALS SHALL BE IN ACCORDANCE WITH THE DELAWARE DESIGN MANUAL.
FUTURE OVERLAY ALLOWANCE SHALL BE 25 LBS/SQ FT.
STEEL BRIDGE DECK FORMS WHICH STAY IN PLACE (INCLUDING CONCRETE IN FORM CORRUGATIONS) SHALL BE 15 LBS/SQ FT.
VEHICLE LIVE LOAD SHALL BE HL-93, WHICH CONSISTS OF A DESIGN TRUCK OR TANDEM WITH DYNAMIC LOAD ALLOWANCE AND A LANE LOAD. RATING SHALL USE ALL DELAWARE LEGAL LOADS SPECIFIED IN THE BRIDGE DESIGN MANUAL.
BARRIER HAS BEEN DESIGNED FOR TEST LEVEL FIVE (TL-5).
FATIGUE DESIGN SHALL BE BASED ON THE FOLLOWING ONE DIRECTIONAL TRAFFIC VOLUMES:

RAMP A OVER SR 7: DESIGN ADT = 21,700, DESIGN ADTT = 3,125

FOR THERMAL LOADS, CONSIDER THE MODERATE TEMPERATURE RANGE AS STIPULATED IN THE AASHTO LRFD DESIGN SPECIFICATIONS. THE NORMAL TEMPERATURE SHALL BE CONSIDERED TO BE 60F.
FOR SEISMIC LOADS, CONSIDER SEISMIC PERFORMANCE ZONE 1, WITH A SITE CLASS = E AND IMPORTANCE CATEGORY - CRITICAL.

△3 3. PORTLAND CEMENT CONCRETE
PORTLAND CEMENT CONCRETE FOR CAST-IN-PLACE ELEMENTS SHALL BE AS FOLLOWS:
(28 DAY COMPRESSIVE STRENGTH)
~~-ITEM NO. 602007 (CLASS A, F'c=4500 PSI) - PIER ABOVE FOOTING~~
~~-ITEM NO. 602011 (CLASS A, F'c=4500 PSI) - PIER FOOTING, TOP OF PIER PILES~~
~~-ITEM NO. 602786 (CLASS A, F'c=8000 PSI) - POST-TENSIONED PIER~~ CAP
~~-ITEM NO. 602013 (CLASS D, F'c=4500 PSI) - DECK~~
~~-ITEM NO. 602014 (CLASS D, F'c=4500 PSI) - APPROACH SLAB~~
~~-ITEM NO. 602015 (CLASS A, F'c=4500 PSI) - ABUTMENT, TOP OF ABUTMENT PILES~~
~~-ITEM NO. 602017 (CLASS A, F'c=4500 PSI) - BARRIER~~

602007 - PORTLAND CEMENT CONCRETE MASONRY, PIER ABOVE FOOTING, CLASS A (fc' = 4,500 PSI, PIER ABOVE FOOTING)
602011 - PORTLAND CEMENT CONCRETE MASONRY, PIER FOOTING, CLASS A (fc' = 4,500 PSI, PIER FOOTING, TOP OF PIER PILES)
602013 - PORTLAND CEMENT CONCRETE MASONRY, SUPERSTRUCTURE, CLASS D (fc' = 4,500 PSI, DECK)
602014 - PORTLAND CEMENT CONCRETE MASONRY, APPROACH SLAB, CLASS D (fc' = 4,500 PSI, APPROACH SLAB)
602015 - PORTLAND CEMENT CONCRETE MASONRY, ABUTMENT ABOVE FOOTING, CLASS A (fc' = 4,500 PSI, ABUTMENT, TOP OF ABUTMENT PILES)
602017 - PORTLAND CEMENT CONCRETE MASONRY, PARAPET, CLASS A (fc' = 4,500 PSI, BARRIER)
602786 - PORTLAND CEMENT CONCRETE MASONRY, SUBSTRUCTURE, 8000PSI (fc' = 8,000 PSI, PIER CAP 2)
602787 - POST TENSIONING PIER CAPS, BONDED SYSTEM, (PIER CAP 2)

MIX REQUIREMENTS SHALL CONFORM TO SECTION 812 OF THE DELAWARE DEPARTMENT OF TRANSPORTATION STANDARD SPECIFICATIONS. ALL EXPOSED CORNERS OF CONCRETE SHALL BE CHAMFERED WITH ¾" X ¾" MILLED CHAMFER STRIPS UNLESS NOTED OTHERWISE, EXCEPT ON UNEXPOSED FOOTINGS OR WHERE INDICATED BY THE NOTATION ON THE PLANS, "DO NOT CHAMFER". NO SLIP-FORMING OF BARRIERS IS PERMITTED, UNLESS OTHERWISE APPROVED.

4. BAR REINFORCEMENT
REINFORCING STEEL SHALL CONFORM TO AASHTO M31 (ASTM A615), GRADE 60. ALL REINFORCING STEEL SHALL HAVE A CLEAR COVER OF 2" UNLESS OTHERWISE SPECIFIED ON THE PLANS. FUSION-BONDED EPOXY COATED REINFORCING STEEL SHALL CONFORM TO AASHTO M284 (ASTM D3963), AND SHALL BE DENOTED WITH A SUFFIX "E" IN THE BAR MARKS.

DO NOT WELD GRADE 60 REINFORCING STEEL.

5. POST-TENSIONING STEEL
ALL POST-TENSIONING STRAND TENDONS SHALL CONSIST OF 0.6 INCH DIAMETER SEVEN WIRE UNCOATED LOW RELAXATION STRANDS CONFORMING TO AASHTO M203 (ASTM A416), GRADE 270.
DUCTS SHALL BE 4½ INCH DIA. POLYETHYLENE/POLYPROPYLENE (PE/PP) PLASTIC DUCTS.
GROUT FOR DUCTS SHALL BE IN ACCORDANCE WITH ITEM NO. 602779 "POST TENSIONING GROUT"

6. STRUCTURAL STEEL
STRUCTURAL STEEL SHALL CONFORM TO ASTM A 709, GRADE 50W, INCLUDING THE ADDITIONAL REQUIREMENTS FOR CHARPY V-NOTCH TESTING OF AASHTO M270 FOR PRIMARY LOAD CARRYING MEMBERS UNDER TENSILE STRESS. THE PRIMARY LOAD CARRYING MEMBER COMPONENTS ARE THE FLANGES, WEBS, AND SPLICE PLATES OF THE STEEL GIRDERS. THE USE OF FRACTURE CRITICAL MEMBERS IS PROHIBITED. FATIGUE CATEGORIES D, E AND F SHALL NOT BE USED IN STRESS REVERSAL OR TENSION AREAS, EXCEPT FOR TEMPORARY CONDITIONS.

SEVEN (7) FEET AT THE ENDS OF EACH GIRDER AND THE END CROSS FRAMES SHALL BE PAINTED WITH A URETHANE PAINT SYSTEM IN ACCORDANCE WITH SPECIAL PROVISION #605537-URETHANE PAINT SYSTEM. THE FINAL COLOR SHALL BE FEDERAL #10076 (BROWN) OF FED-STD-595B. COST OF PAINTING SHALL BE INCIDENTAL TO ITEM 605002, STEEL STRUCTURES.

ALL BOLTS FOR SPLICE PLATES AND CROSS FRAMES SHALL BE ⅞" DIA. IN 15/16" DIA. HOLES AND CONFORM TO ASTM A325, TYPE 3, WITH THREADS EXCLUDED FROM SHEAR PLANES. BOLTED CONNECTIONS SHALL BE CLASS B SLIP CRITICAL CONNECTIONS, UNLESS NOTED ON THE PLANS.

7. SERVICEABILITY
LIVE LOAD DEFLECTION SHALL BE LIMITED TO L/800.
FOR REINFORCEMENT DISTRIBUTION REQUIREMENTS, CONSIDER CLASS 2 EXPOSURE CRITERIA FOR DECKS. ACCOMMODATION TO JACK GIRDERS FOR FUTURE BEARING REPLACEMENT HAS BEEN CONSIDERED IN THE DESIGN.

8. CONSTRUCTION JOINTS
KEYED CONSTRUCTION JOINTS SHALL BE 2" X 4" OR AS NOTED. ALL EXPOSED CONSTRUCTION JOINT EDGES SHALL HAVE A ¾" V-NOTCH, UNLESS OTHERWISE NOTED.

△3 ~~9. STABILIZING STRUCTURAL EXCAVATIONS~~
~~SHEETING AND SHORING SHALL BE REQUIRED FOR ANY EXCAVATION EXCEEDING FIVE (5) FEET IN HEIGHT, THE COST SHALL BE PAID UNDER ITEM NO. 207501 - IN LIEU OF SHORING, THE CONTRACTOR MAY USE A 2:1 CUT SLOPE. NO PAYMENT SHALL BE MADE FOR ADDITIONAL EXCAVATION OR FILL OUTSIDE THE LIMITS AS DEFINED IN SECTION 207 OF THE STANDARD SPECIFICATIONS.~~

10. EXCAVATION REQUIRED TO ATTAIN THE GRADE FOR INSTALLATION OF MSE WALLS SHALL BE INCIDENTAL TO ITEM NO. 602772 - MECHANICALLY STABILIZED EARTH WALLS.

11. STRUCTURAL BACKFILL SHALL CONFORM TO THE REQUIREMENTS OF BORROW TYPE C. MSE WALL BACKFILL SHALL BE AS SPECIFIED ON THE PLANS.

12. ROADWAY CLEARANCES
A MINIMUM OF 16'-6" VERTICAL CLEARANCE SHALL BE MAINTAINED ABOVE ALL ROADWAYS.
A MINIMUM OF 2'-0" HORIZONTAL CLEARANCE SHALL BE MAINTAINED FROM THE OUTSIDE EDGE OF SHOULDER OFFSET (FACE OF CURB) TO THE FACE OF ANY OBSTRUCTION. THESE CLEARANCES APPLY AT ALL TIMES INCLUDING DURING CONSTRUCTION.

BRIDGE LEGAL LOAD RATING (TONS)
RAMP A OVER SR 7

TRUCK TYPE	RATING FACTOR	SAFE LOAD CAPACITY
HS-20	1.54	55.4
S220	2.45	49.0
S327	2.28	61.5
S335	1.72	60.2
S437	1.70	62.0
T330	2.24	67.2
T435	1.89	66.1
T540	1.73	69.2

BRIDGE DESIGN LOAD RATING:
INVENTORY = 1.14
OPERATING = 1.48

13. TEST PILES
PILE LENGTHS FOR ORDERING PURPOSES SHALL BE DETERMINED BY TEST PILES. A MINIMUM OF ONE (1) PILE PER SUBSTRUCTURE, AS SHOWN ON THE PLANS, SHALL BE DYNAMICALLY TESTED BY THE CONTRACTOR IN ACCORDANCE WITH SPECIAL PROVISION 619519. TEST AND PRODUCTION PILE RE-STRIKES WILL BE PAID AS FOLLOWS:

A). ALL TEST PILE(S) WILL BE RESTRUCK AND DYNAMICALLY TESTED BY THE CONTRACTOR. THE TEST PILE RESTRIKES SHALL BE INCIDENTAL TO ITEM NO. 619519 DYNAMIC PILE TESTING BY CONTRACTOR PROVIDED THAT THEY ARE PERFORMED WITHIN FIVE (5) CALENDAR DAYS FROM INITIAL DRIVE.

B). AN ADDITIONAL PAYMENT WILL BE MADE TO THE CONTRACTOR IF HE IS DIRECTED BY THE ENGINEER TO WAIT AND RESTRIKE THE TEST PILE MORE THAN FIVE (5) CALENDAR DAYS AFTER INITIAL DRIVE. THE CONTRACTOR SHALL BE COMPENSATED AT THE FIXED PRICE OF $1,000.00 PER CALENDAR DAY FOR EVERY DAY, AFTER THE FIFTH CALENDAR DAY, UNDER ITEM NO. 619502 TEST PILE RESTRIKE. MULTIPLE TEST PILE RESTRIKES OCCURRING ON THE SAME DAY WILL ONLY BE PAID FOR AS ONE CALENDAR DAY. NO ADDITIONAL COMPENSATION WILL BE MADE REGARDLESS OF THE NUMBER OF TEST PILE RESTRIKES PERFORMED THAT DAY.

C). RESTRIKES ON PRODUCTION PILES WHICH ARE DESIGNATED TO BE DYNAMICALLY TESTED WILL NOT BE PAID UNDER ITEM NO. 619501 PRODUCTION PILE RESTRIKE. THESE PRODUCTION PILE RESTRIKES ARE INCIDENTAL TO ITEM NO. 619519 DYNAMIC PILE TESTING BY CONTRACTOR.

THE DEPARTMENT RESERVES THE RIGHT TO PERFORM DYNAMIC TESTING OF RESTRIKES.

14. THE CONCRETE PIER CAPS SHOWN ON THE PLANS SHALL BE USED. NO OTHER ALTERNATES WILL BE CONSIDERED.

△3 15. MASS CONCRETE
PIER 2 POST-TENSIONED CAP IS DESIGNED AS MASS CONCRETE. SEE SPECIAL PROVISIONS.

NOTE:

LOAD RATING IS IN ACCORDANCE WITH THE LOAD AND RESISTANCE FACTOR RATING (LRFR) METHOD.

CROSS REFERENCE NOTE:

FOR MSE WALL NOTES, SEE DWG S2-13.

UNOFFICIAL WEBSITE COPY

O:\2032687-XM\CAD\Bridge\BR-S2\gen01_BR-S2_sr1.dgn
2/24/2011
Steve_Lambert

DELAWARE DEPARTMENT OF TRANSPORTATION

ADDENDUMS / REVISIONS	
ADDENDUM NO. △3 REV. NOTE 3, DELETED NOTE 9, ADDED	
NOTE 15, 02/18/11, SAM	

SR1 / I-95 INTERCHANGE

CONTRACT	28-090-03
COUNTY	NEW CASTLE
BRIDGE NO.	1-716C
DESIGNED BY: R. F. KIRCHNER	
CHECKED BY: J. S. LI	

RAMP A OVER SR 7
GENERAL NOTES

SHEET NO.	S2-2
	255
TOTAL SHTS.	803

UNOFFICIAL WEBSITE COPY

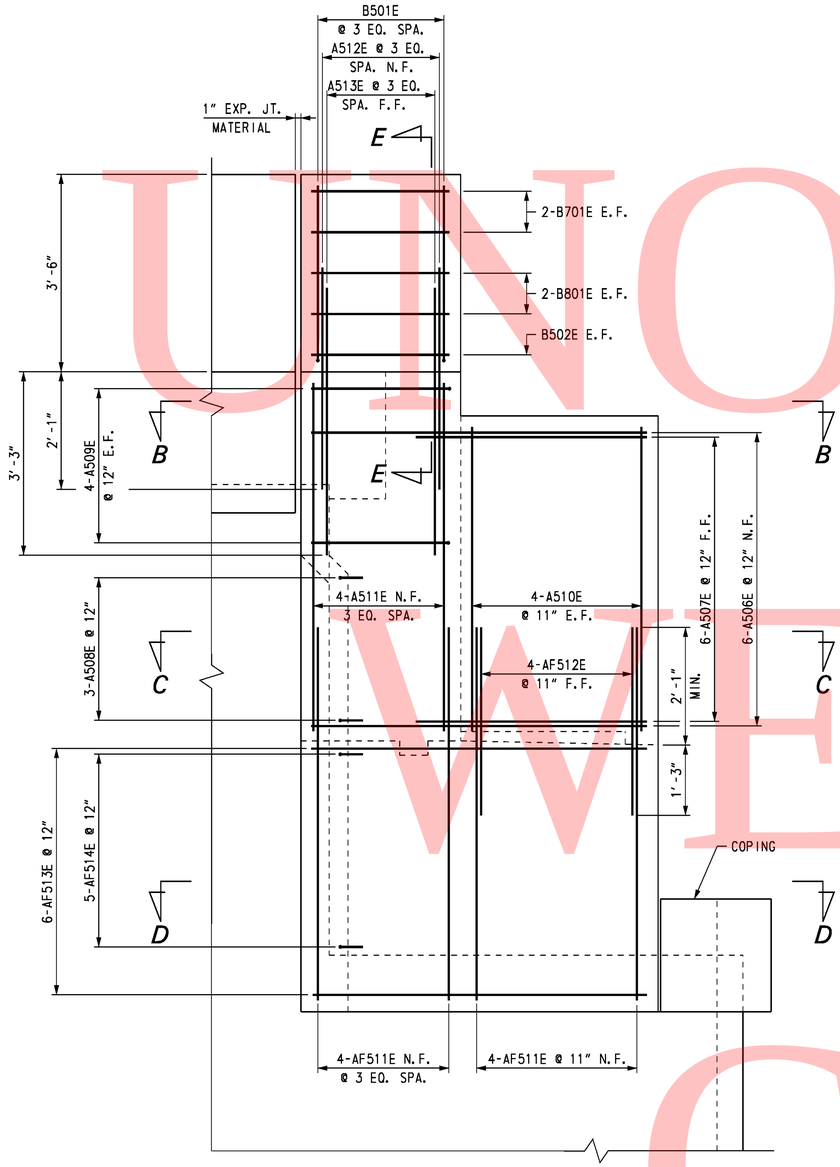

WINGWALL 11 SIDE ELEVATION

SCALE: ¾" = 1'-0"

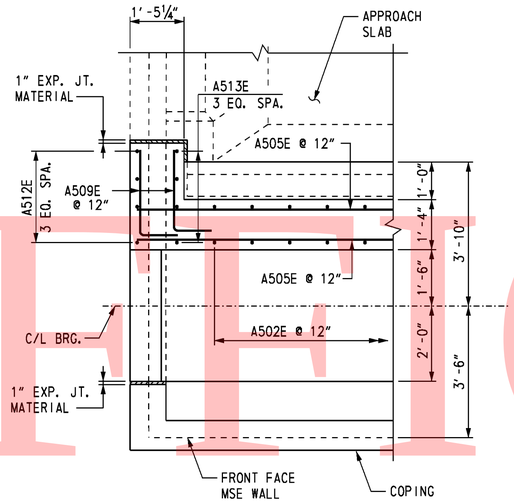

SECTION B-B

SCALE: ½" = 1'-0"

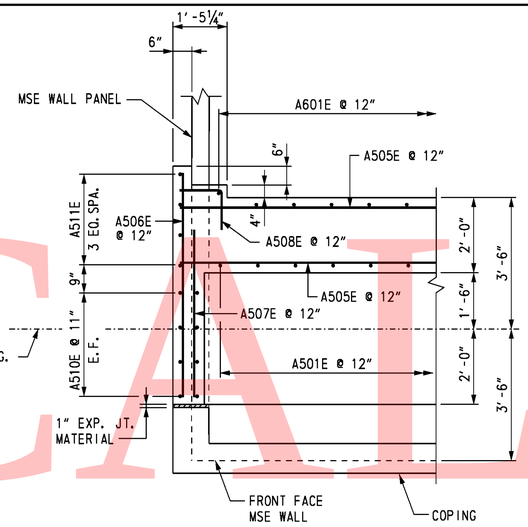

SECTION C-C

SCALE: ½" = 1'-0"

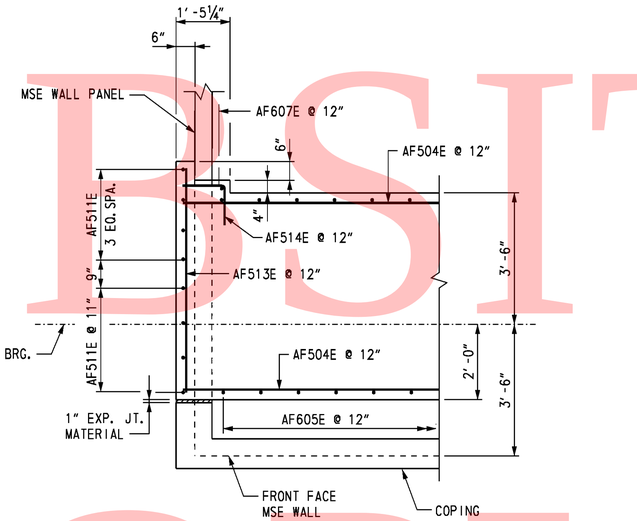

SECTION D-D

SCALE: ½" = 1'-0"

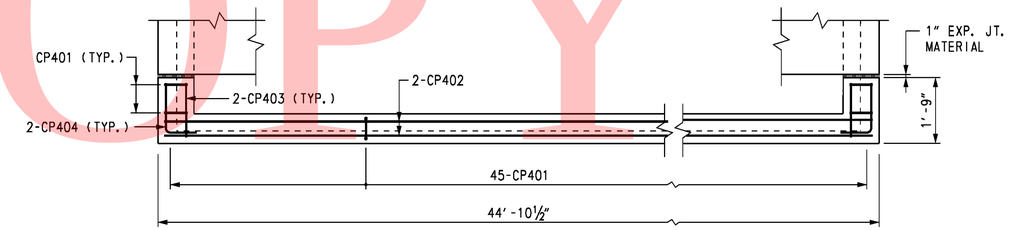

⚠3 ABUTMENT MSE WALL COPING PLAN

SCALE: ½" = 1'-0"

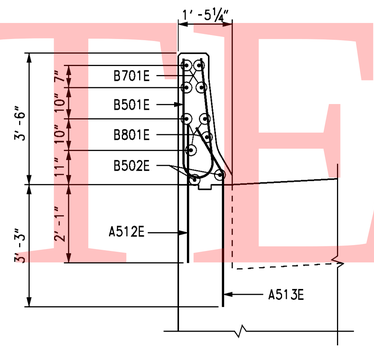

SECTION E-E

SCALE: ½" = 1'-0"

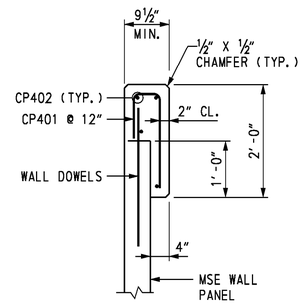

⚠3 COPING DETAIL

SCALE: ¾" = 1'-0"

CROSS REFERENCE NOTES:

1. FOR ABUTMENT A PLAN AND ELEVATION, SEE DWG. S2-5.
2. FOR ABUTMENT A ELEVATION REINFORCEMENT DETAILS, SEE DWG. S2-7.
3. FOR REINFORCING BAR LIST, SEE DWG. S2-15.

S2-8

DELAWARE
DEPARTMENT OF TRANSPORTATION

ADDENDUMS / REVISIONS	
ADDENDUM NO. ⚠3 ADDED COPING REINF., 02/18/11, RFK	

SR1 / I-95 INTERCHANGE

CONTRACT	BRIDGE NO.	1-716C
28-090-03	DESIGNED BY: K. D. BEAVER	
COUNTY	CHECKED BY: J. S. LI	
NEW CASTLE		

RAMP A OVER SR 7

ABUTMENT A REINFORCEMENT 2

SHEET NO.	261
TOTAL SHTS.	803

O:\20832687-XM\CAD\Bridge\BR-S2\sb05_BR-S2_srf.dgn
2/10/2011
Steve_Lambert

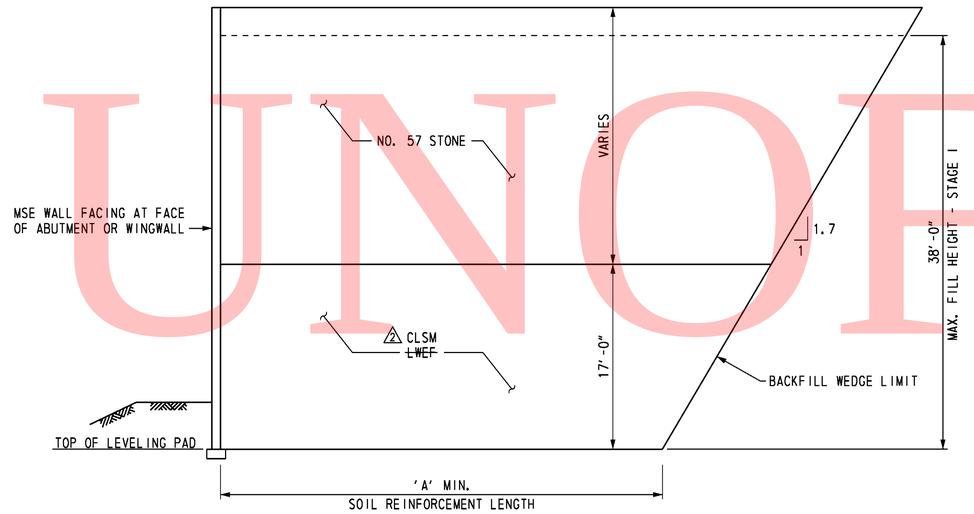

SOIL PROFILE SECTION
ABUTMENT A AND WINGWALLS I AND II

NOT TO SCALE

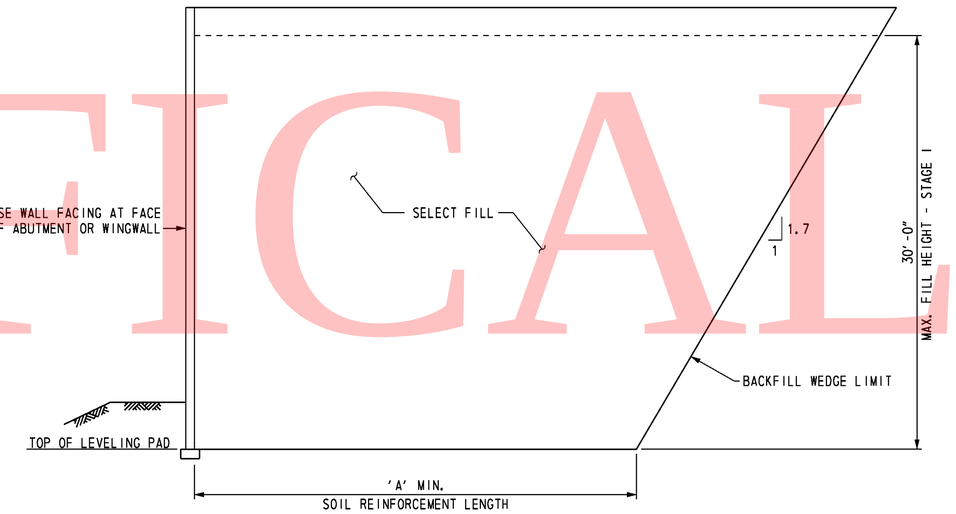

SOIL PROFILE SECTION
ABUTMENT B AND WINGWALLS III AND IV

NOT TO SCALE

MINIMUM REINFORCED ZONE WIDTH (A) FEET	
ABUTMENT A	
FACE OF ABUTMENT	31.0
3 WINGWALLS ~~I AND~~ II	31.0
ABUTMENT B	
FACE OF ABUTMENT	33.0
WINGWALLS III AND IV	26.0

SOIL PROPERTIES				
SOIL TYPE	UNIT WEIGHT (PCF)	DRAINED ANGLE OF FRICTION (DEGREES)	UNDRAINED SHEAR (PSF)	FACTORED BEARING RESISTANCE (KSF)
SELECT FILL	125	34	-	-
2 ~~LWEF~~	~~40~~	~~38~~	-	-
NO. 57 STONE	105	38	-	-
FOUNDATION SOIL:				
ABUTMENT A	120	24	1250	5.0
ABUTMENT B	120	24	1400	5.1
2 CONTROLLED LOW STRENGTH MATERIAL (CLSM)	40	38	-	-

FOUNDATION NOTES

THE FACTORED BEARING RESISTANCE SHALL BE VERIFIED PRIOR TO CONSTRUCTION OF THE MSE WALL.

THE INTERNAL STABILITY OF THE MSE WALL SHALL BE DESIGNED BY THE CONTRACTOR USING THE SOIL PARAMETERS PROVIDED FOR EACH STRUCTURE LOCATION. THE INTERNAL STABILITY CALCULATIONS SHALL BE SIGNED AND SEALED BY A PROFESSIONAL ENGINEER LICENSED IN THE STATE OF DELAWARE AS INDICATED IN THE PROJECT SPECIFICATIONS.

ISOLATED AREAS OF EXISTING FILL MAY BE ENCOUNTERED DURING CONSTRUCTION OF THIS MSE WALL. EXISTING FILL SHALL BE UNDERCUT TO EXPOSE UNDISTURBED NATURAL SOIL. UNDERCUTTING AND BACKFILLING WILL BE MEASURED AND PAID IN ACCORDANCE WITH THE SPECIFICATIONS.

A MINIMUM 7-DAY QUARANTINE PERIOD SHALL BE REQUIRED AFTER CONSTRUCTION OF THE WALL TO THE "MAX. FILL HEIGHT - STAGE 1" INDICATED ON THE SOIL PROFILE SECTION. NO FURTHER FILL SHALL BE PLACED UNTIL AUTHORIZED BY THE ENGINEER. ONCE AUTHORIZATION IS GIVEN, FILL SHALL BE PLACED IN ADDITIONAL INCREMENTS OF 5 FEET IN HEIGHT, WITH THE SAME QUARANTINE PERIOD AND AUTHORIZATION REQUIRED AT EACH 2 INCREMENT. AN ADDITIONAL QUARANTINE PERIOD OF ~~30 TO~~ 60 DAYS IS REQUIRED AFTER CONSTRUCTION OF THE MSE WALL TO ITS FULL HEIGHT. NO FURTHER CONSTRUCTION SHALL BE PERMITTED UNTIL AUTHORIZED BY THE ENGINEER. A TOTAL ESTIMATED SETTLEMENT OF APPROXIMATELY FOUR TO FIVE INCHES IS ANTICIPATED.

3 FOR WINGWALL I AND WINGWALL II (STA. 1245+50.29 TO STA. 1245+58.30), SOIL REINFORCEMENT LENGTH RATIO SHALL BE L/H=1.2. NO. 57 STONE BACKFILL APPLIES ABOVE ELEVATION 83.00.

UNOFFICAL WEBSITE COPY

O:\20832687-XM\CAD\Bridge\BR-S2\rd04_BR-S2_srf.dgn
2/10/2011
Steve_Lambert

S2-14

DELAWARE
DEPARTMENT OF TRANSPORTATION

ADDENDUMS / REVISIONS	
ADDENDUM NO. 2 REVISED QUARANTINE PERIOD AND SOIL PROPERTIES, 01/26/11, RFK	
ADDENDUM NO. 3 REV. BACKFILL PROFILE, 02/18/11, RFK	

SR1 / I-95 INTERCHANGE

CONTRACT	BRIDGE NO.	1-716C
28-090-03	DESIGNED BY: R. F. KIRCHNER	
COUNTY	CHECKED BY: G.P. MISTRY	
NEW CASTLE		

RAMP A OVER SR 7

WINGWALL DETAILS 2

SHEET NO.	TOTAL SHTS.
267	803

REINFORCING BAR LIST

ABUTMENT A

MARK	LENGTH	NO. BARS	TYPE	A	B	C	D	E	G	H	J	K	O	R	REMARKS
AP401E	6′-7″	95	T3									1′-8″	1′-7″		
AP801E	18′-11″	40	37	0′-11″	18′-0″						0′-8″				
AF501E	26′-11″	6	STR.												
AF502E	17′-6″	6	STR.												
AF503E	27′-11″	4	STR.												
AF504E	18′-6″	6	STR.												
AF505E	10′-7″	2	STR.												
AF506E	8′-0″	2	STR.												
AF507E	9′-3″	6	STR.												
AF508E	12′-3″	18	36	0′-10″	11′-5″										
AF509E	8′-8″	6	36	0′-10″	7′-10″										
AF510E	3′-7″	44	STR.												
AF511E	7′-0″	16	STR.												
AF512E	4′-5″	8	STR.												
AF513E	6′-0″	12	STR.												
AF514E	2′-2″	10	17		1′-1″	1′-1″									
AF601E	17′-4″	8	T2	1′-0″	5′-2″	2′-6″	5′-2″	2′-6″	1′-0″						
AF602E	17′-10″	10	T2	1′-0″	5′-2″	2′-9″	5′-2″	2′-9″	1′-0″						
AF603E	18′-10″	10	T2	1′-0″	5′-2″	3′-3″	5′-2″	3′-3″	1′-0″						
AF604E	19′-8″	10	T2	1′-0″	5′-2″	3′-8″	5′-2″	3′-8″	1′-0″						
AF605E	20′-10″	8	T2	1′-0″	5′-2″	4′-3″	5′-2″	4′-3″	1′-0″						
AF606E	4′-5″	42	STR.												
AF607E	6′-7″	2	STR.												
A501E	6′-2″	44	STR.												
A502E	7′-1″	42	17		3′-0″	1′-0″	3′-1″								
A503E	3′-9″	42	16		1′-6″	0′-10″	1′-5″			1′-0″		1′-0″			
A504E	28′-0″	16	STR.												
A505E	18′-9″	16	STR.												
A506E	6′-0″	12	STR.												
A507E	4′-7″	12	STR.												
A508E	2′-2″	6	17		1′-1″	1′-1″									
A509E	3′-3″	16	36	1′-0″	2′-3″										
A510E	5′-0″	16	STR.												
A511E	7′-7″	8	STR.												
A512E	3′-10″	8	STR.												
A513E	4′-8″	8	16			3′-5″	1′-3″			1′-0¼″		0′-8¾″			
A601E	3′-9″	44	STR.												
B501E	6′-9″	8	H1		2′-9½″	1′-2″	2′-9½″			0′-5″			0′-4½″		
B502E	2′-0″	4	STR.												
B701E	2′-0″	8	STR.												
B801E	2′-0″	8	STR.												
3 CP401	2′-9½″	49	17		1′-8″	0′-5½″	0′-8″								
3 CP402	44′-6″	4	STR.												
3 CP403	1′-5″	4	STR.												
3 CP404	2′-5″	4	17		1′-0″	1′-5″									

ABUTMENT B

MARK	LENGTH	NO. BARS	TYPE	A	B	C	D	E	G	H	J	K	O	R	REMARKS
AP431E	6′-7″	95	T3									1′-8″	1′-7″		
AP831E	18′-11″	40	37	0′-11″	18′-0″						0′-8″				
AF531E	27′-3″	6	STR.												
AF532E	17′-4″	6	STR.												
AF533E	28′-3″	4	STR.												
AF534E	18′-4″	8	STR.												
AF535E	21′-1″	2	STR.												
AF536E	8′-0″	2	STR.												
AF537E	10′-1″	6	STR.												
AF538E	12′-3″	18	36	0′-10″	11′-5″										
AF539E	8′-8″	6	36	0′-10″	7′-10″										
AF540E	3′-7″	44	STR.												
AF541E	7′-4″	16	STR.												
AF542E	4′-5″	8	STR.												
AF543E	6′-0″	12	STR.												
AF544E	2′-2″	10	17		1′-1″	1′-1″									
AF631E	17′-4″	8	T2	1′-0″	5′-2″	2′-6″	5′-2″	2′-6″	1′-0″						
AF632E	18′-2″	10	T2	1′-0″	5′-2″	2′-11″	5′-2″	2′-11″	1′-0″						
AF633E	19′-2″	10	T2	1′-0″	5′-2″	3′-5″	5′-2″	3′-5″	1′-0″						
AF634E	20′-2″	10	T2	1′-0″	5′-2″	3′-11″	5′-2″	3′-11″	1′-0″						
AF635E	21′-8″	8	T2	1′-0″	5′-2″	4′-8″	5′-2″	4′-8″	1′-0″						
AF636E	4′-3″	42	STR.												
AF637E	6′-11″	2	STR.												
A531E	6′-2″	44	STR.												
A532E	7′-1″	42	17		3′-0″	1′-0″	3′-1″								
A533E	3′-9″	42	16		1′-6″	0′-10″	1′-5″				1′-0″		1′-0″		
A534E	28′-4″	16	STR.												
A535E	18′-5″	16	STR.												
A536E	6′-0″	12	STR.												
A537E	4′-7″	12	STR.												
A538E	2′-2″	6	17		1′-1″	1′-1″									
A539E	3′-3″	16	36	1′-0″	2′-3″										
A540E	5′-0″	16	STR.												
A541E	7′-6″	8	STR.												
A542E	3′-10″	8	STR.												
A543E	4′-8″	8	16			3′-5″	1′-3″				1′-0¼″		0′-8¾″		
A631E	3′-8″	44	STR.												
B531E	6′-9″	8	H1		2′-9½″	1′-2″	2′-9½″				0′-5″			0′-4½″	
B532E	2′-0″	4	STR.												
B731E	2′-0″	8	STR.												
B831E	2′-0″	8	STR.												
3 CP401	2′-9½″	49	17		1′-8″	0′-5½″	0′-8″								
3 CP402	44′-6″	4	STR.												
3 CP403	1′-5″	4	STR.												
3 CP404	2′-5″	4	17		1′-0″	1′-5″									

BENDING DIAGRAMS

ALL DIMENSIONS ARE FROM OUT TO OUT.

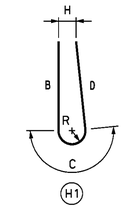

UNOFFICIAL WEBSITE COPY

O:\20832687-XM\CAD\Bridge\BR-S2\sb08_BR-S2_sr1.dgn
2/10/2011
Steve_Lambert

S2-15

DELAWARE DEPARTMENT OF TRANSPORTATION	ADDENDUMS / REVISIONS		SR1 / I-95 INTERCHANGE	CONTRACT 28-090-03	BRIDGE NO. 1-716C	RAMP A OVER SR 7	SHEET NO. 268
	ADDENDUM NO. 3 ADDED COPING REINF., 02/18/11, RFK			COUNTY NEW CASTLE	DESIGNED BY: K.D. BEAVER	ABUTMENTS A AND B REINFORCING BAR LIST	TOTAL SHTS. 803
					CHECKED BY: J.S. LI		

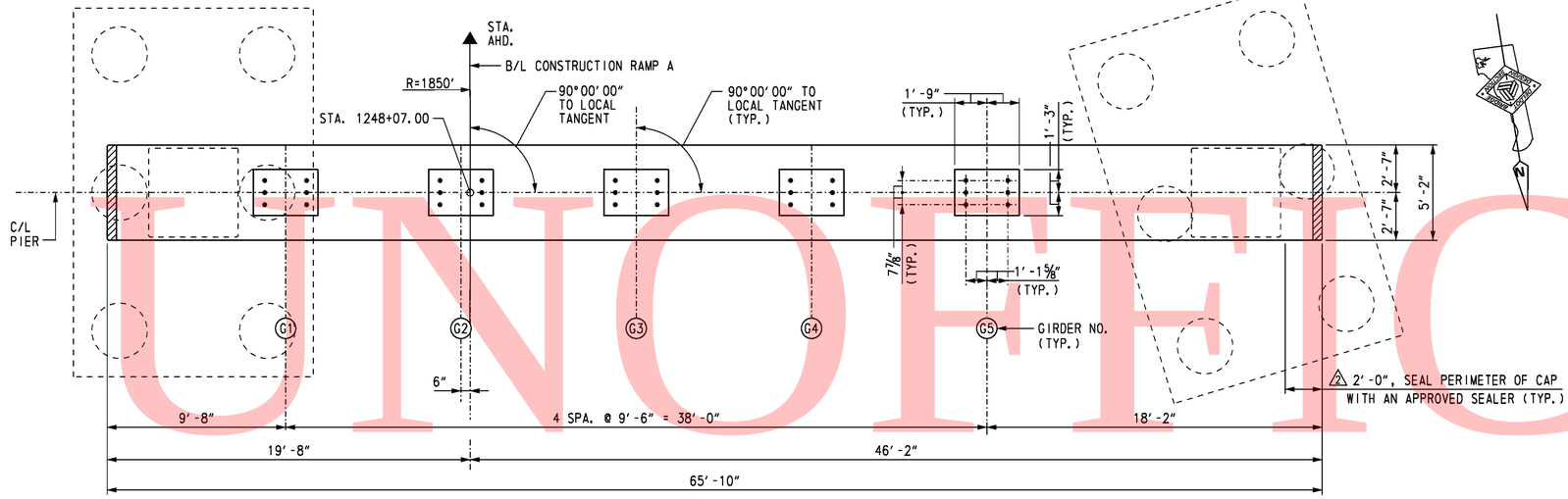

PLAN

SCALE: ¼" = 1'-0"

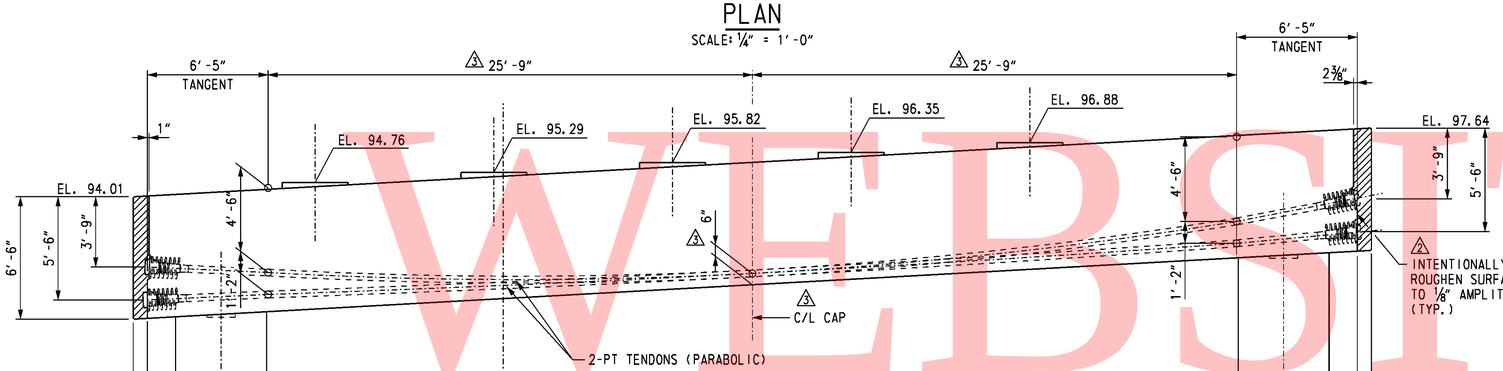

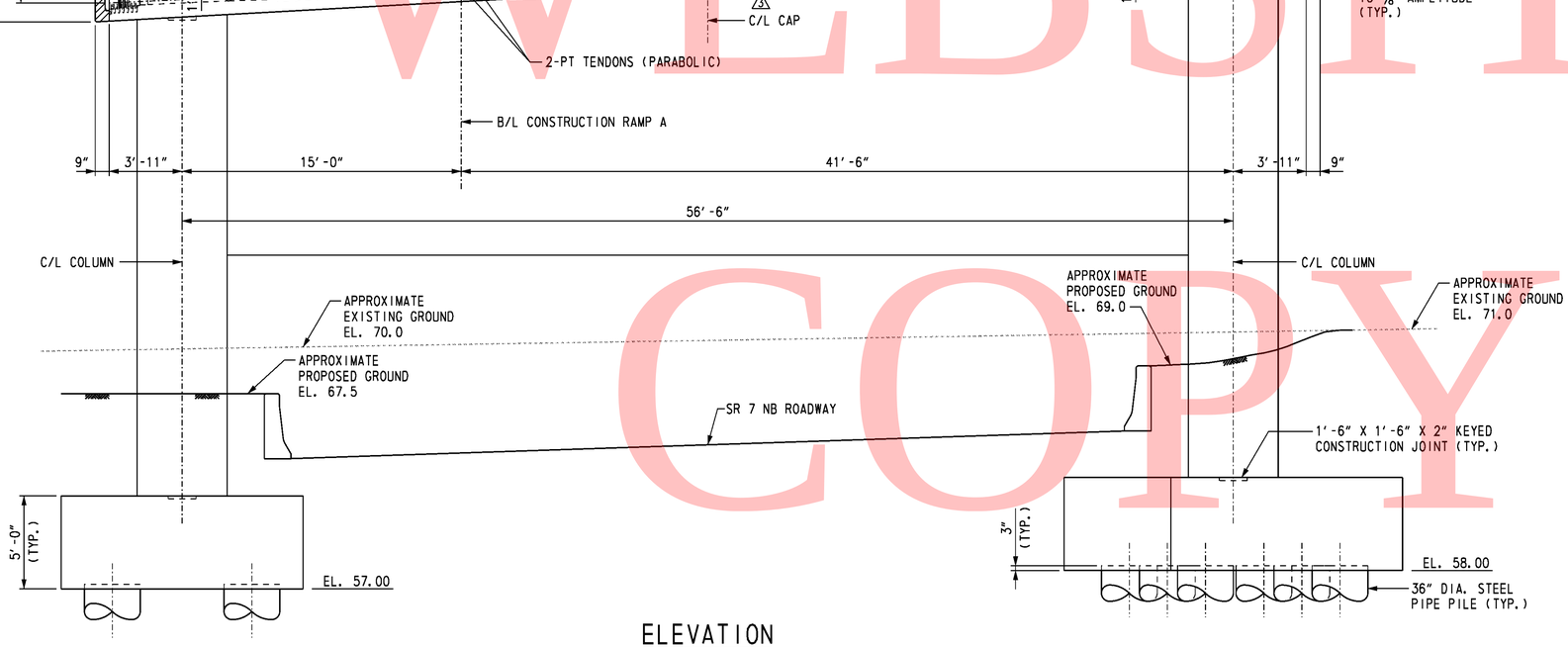

ELEVATION

SCALE: ¼" = 1'-0"

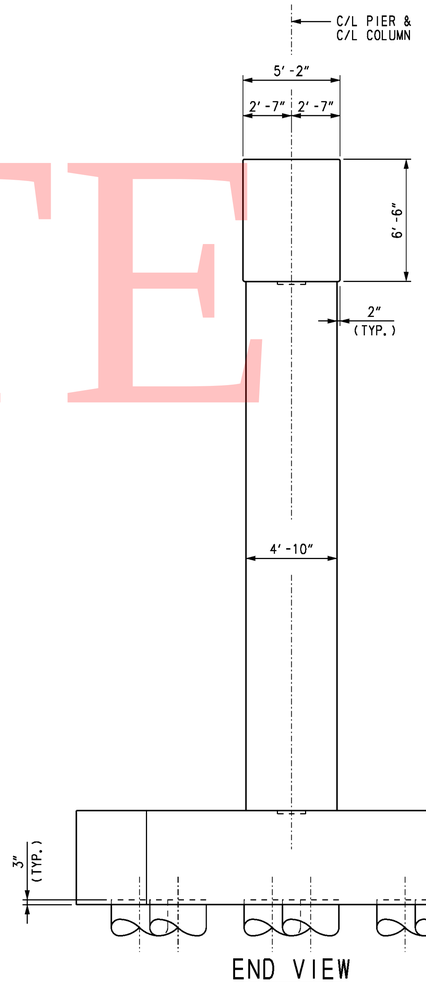

END VIEW

SCALE: ¼" = 1'-0"

CROSS REFERENCE NOTES:

1. FOR BRIDGE PLAN AND ELEVATION, SEE DWG. S2-1.
2. FOR PIER FOUNDATION PLAN, SEE DWG. S2-16.
3. FOR PIER REINFORCING DETAILS, SEE DWGS. S2-22 THRU S2-25.

UNOFFICAL WEBSITE COPY

O:\20832687-XMI\CAD\Bridge\BR-S2\pr03_BR-S2_srf.dgn
2/10/2011
Steve_Lambert

DELAWARE DEPARTMENT OF TRANSPORTATION

ADDENDUMS / REVISIONS	
ADDENDUM NO. 2 ADDED ROUGHENED SURFACE AND CONCRETE SEALER NOTES, 01/26/11, SAM	
ADDENDUM NO. 3 ADDED PT LAYOUT DIMS., 02/18/11, TBC	

SR1 / I-95 INTERCHANGE

CONTRACT	28-090-03
COUNTY	NEW CASTLE
BRIDGE NO.	1-716C
DESIGNED BY: T. B. CUSTER	
CHECKED BY: J. S. LI	

RAMP A OVER SR 7

PIER 2
PLAN AND ELEVATION

SHEET NO.	S2-18
TOTAL SHTS.	271
	803

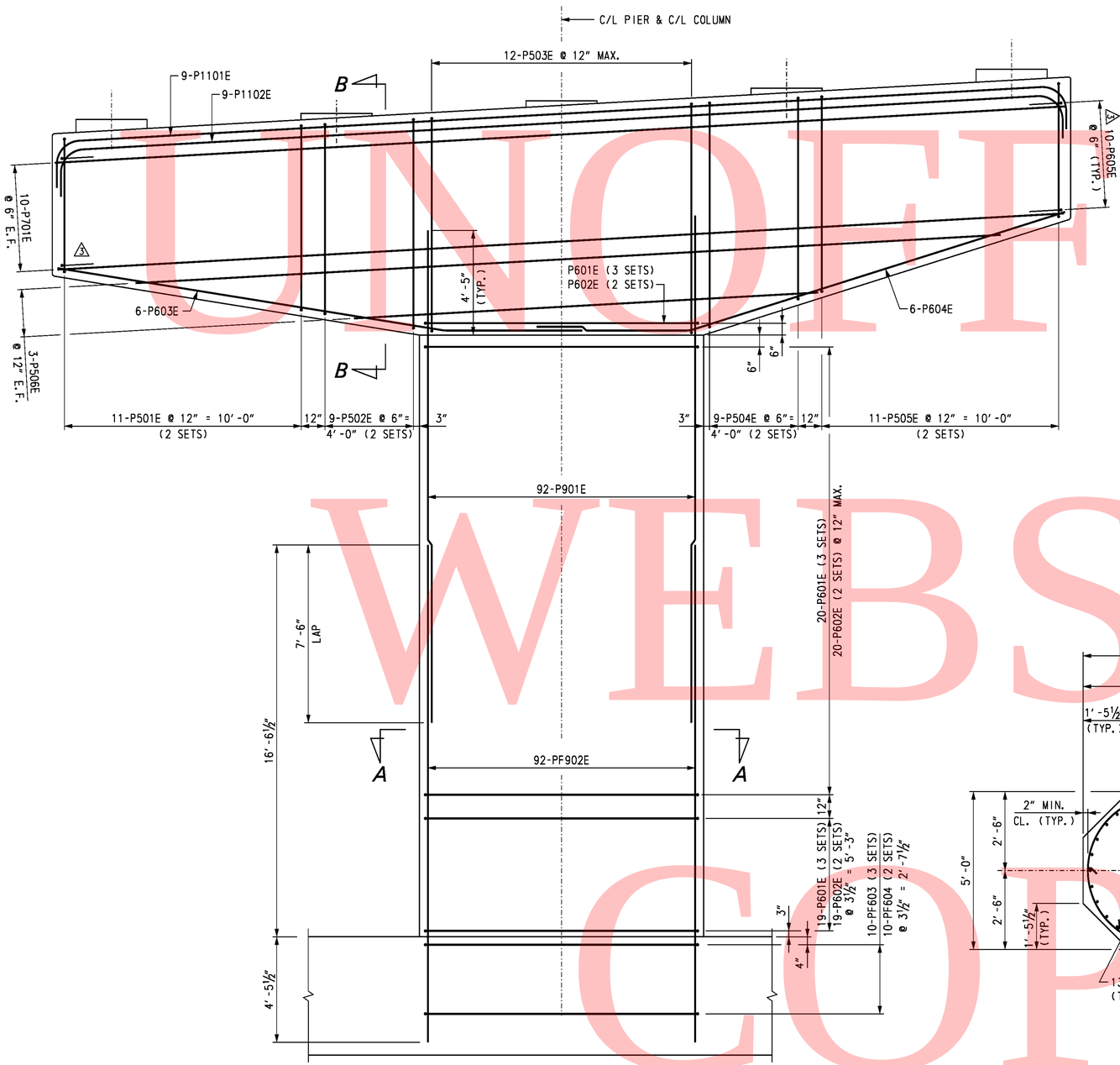

ELEVATION
SCALE: ⅜" = 1'-0"

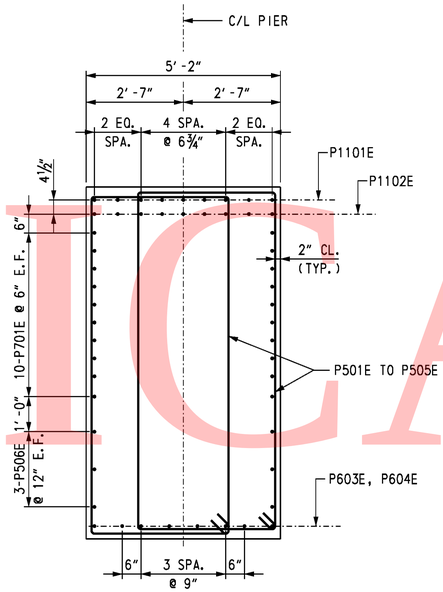

SECTION B-B
SCALE: ½" = 1'-0"

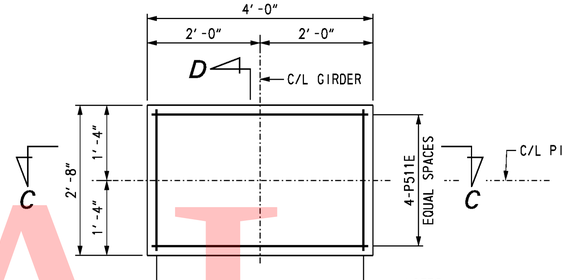

PLAN
PIER BEARING PAD
SCALE: ¾" = 1'-0"

NOTES:

1. PIER BEARING PAD REINFORCEMENT APPLIES AT PIER 1 GIRDERS G1 AND G5.
2. CHAMFER NOT SHOWN ON PLAN VIEW.

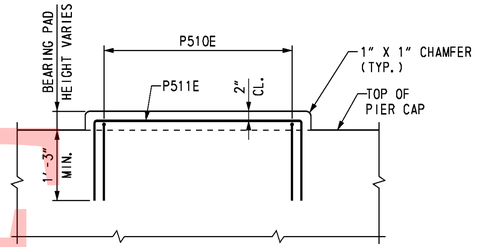

SECTION C-C
SCALE: ¾" = 1'-0"

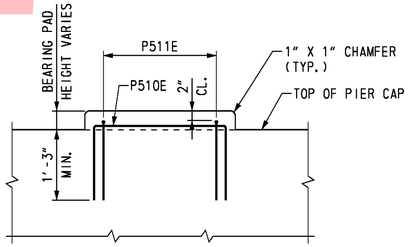

SECTION D-D
SCALE: ¾" = 1'-0"

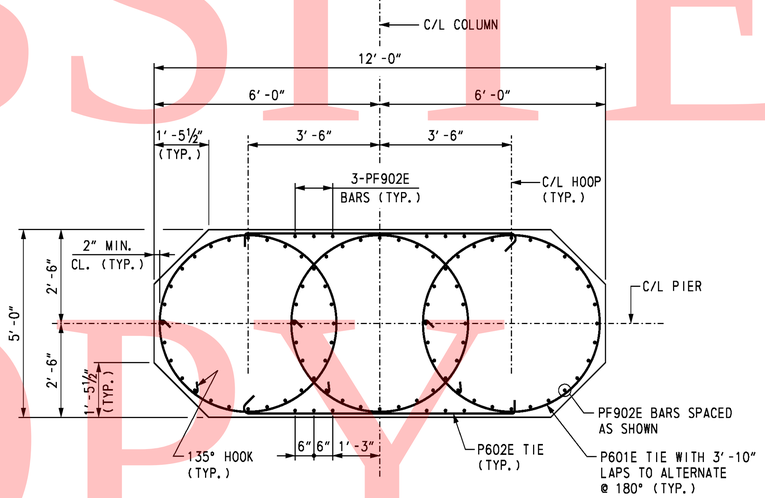

SECTION A-A
SCALE: ½" = 1'-0"

CROSS REFERENCE NOTES:

1. FOR BRIDGE PLAN AND ELEVATION, SEE DWG. S2-1.
2. FOR PIER FOUNDATION PLAN, SEE DWG. S2-16.
3. FOR PIER PLAN AND ELEVATION, SEE DWG. S2-17.
4. FOR PIER FOOTING REINFORCEMENT, SEE DWG. S2-21.
5. FOR REINFORCING BAR LIST, SEE DWG. S2-28 & S2-29.

UNOFFICIAL WEBSITE COPY

O:\2082687-XM\CAD\Bridge\BR-S2\pr05_BR-S2_sr1.dgn
2/10/2011
Steve_Lambert

DELAWARE DEPARTMENT OF TRANSPORTATION

ADDENDUMS / REVISIONS	
ADDENDUM NO. 3 ADDED #6 BARS IN CAP, 02/18/11, RFK	

SR1 / I-95 INTERCHANGE

CONTRACT	BRIDGE NO.	1-716C	SHEET NO.
28-090-03			273
COUNTY	DESIGNED BY: J. S. LI		TOTAL SHTS.
NEW CASTLE	CHECKED BY: K. D. BEAVER		803

RAMP A OVER SR 7
PIER 1
REINFORCEMENT 1

S2-20

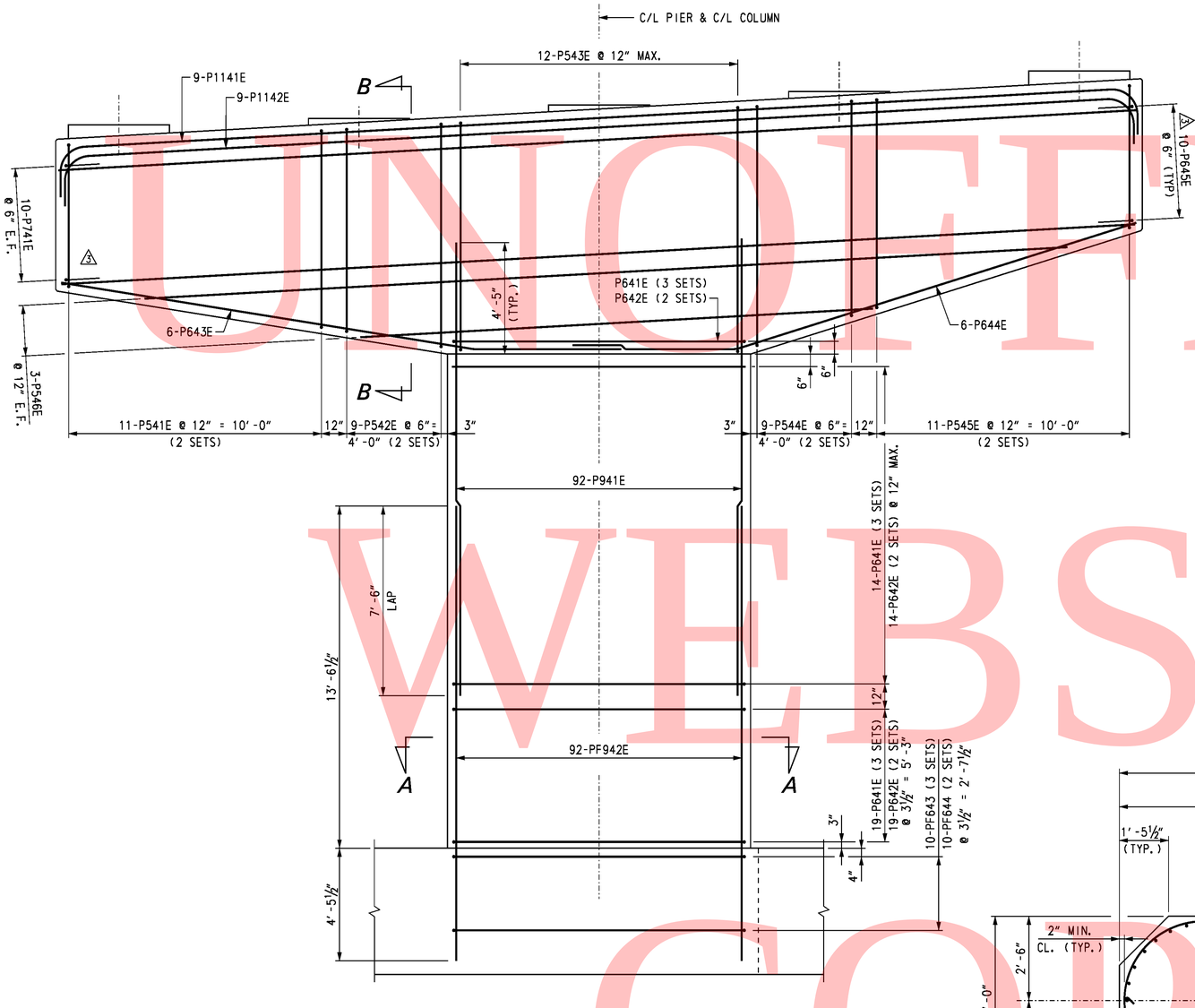

ELEVATION

SCALE: ⅜" = 1'-0"

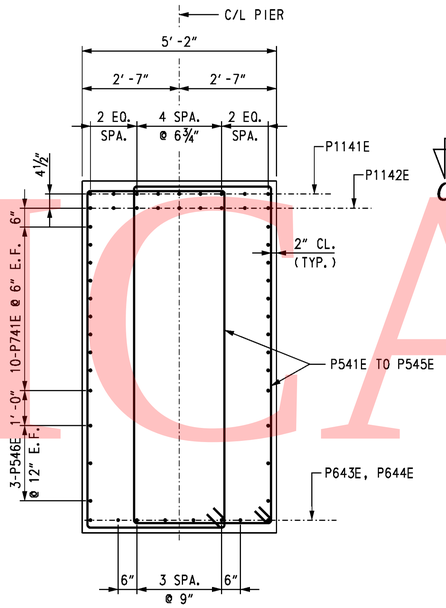

SECTION B-B

SCALE: ½" = 1'-0"

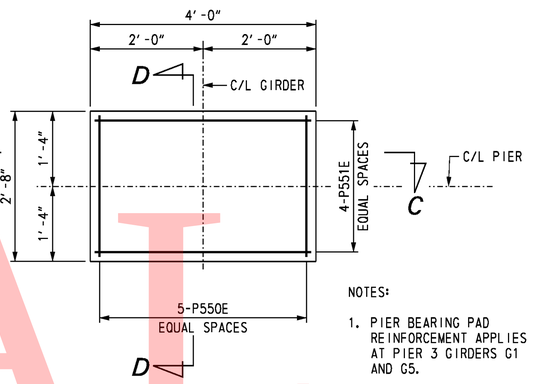

PLAN
PIER BEARING PAD

SCALE: ¾" = 1'-0"

NOTES:

1. PIER BEARING PAD REINFORCEMENT APPLIES AT PIER 3 GIRDERS G1 AND G5.
2. CHAMFER NOT SHOWN ON PLAN VIEW.

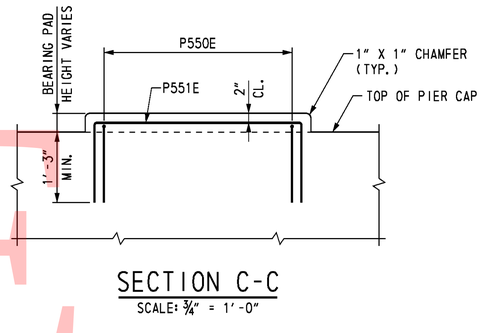

SECTION C-C

SCALE: ¾" = 1'-0"

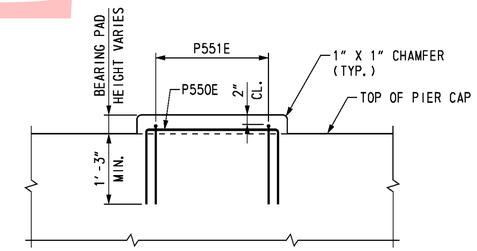

SECTION D-D

SCALE: ¾" = 1'-0"

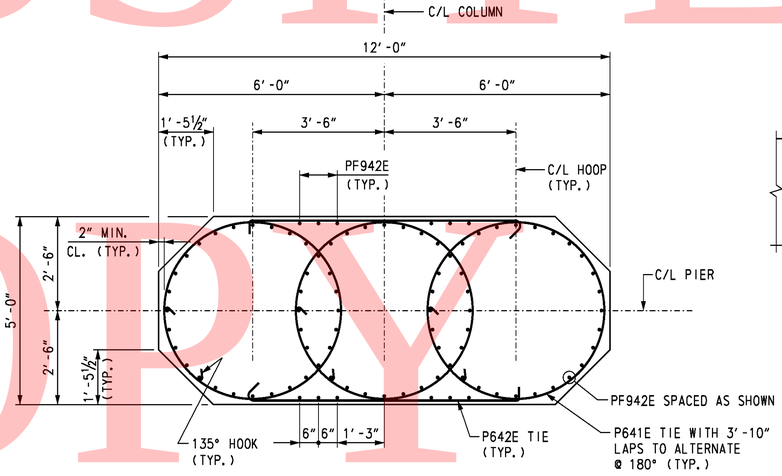

SECTION A-A

SCALE: ½" = 1'-0"

CROSS REFERENCE NOTES:

1. FOR BRIDGE PLAN AND ELEVATION, SEE DWG. S2-1.
2. FOR PIER FOUNDATION PLAN, SEE DWG. S2-16.
3. FOR PIER PLAN AND ELEVATION, SEE DWG. S2-19.
4. FOR PIER FOOTING REINFORCEMENT, SEE DWG. S2-27.
5. FOR REINFORCING BAR LIST, SEE DWG. S2-28 & S2-29.

UNOFFICIAL WEBSITE COPY

O:\20822687-XMK\CAD\Bridge\BR-S2\prf1_BR-S2_sr1.dgn
2/10/2011
Steve_Lambert

DELAWARE
DEPARTMENT OF TRANSPORTATION

ADDENDUMS / REVISIONS	
ADDENDUM NO. 3 ADDED #6 BARS IN CAP, 02/18/11, RFK	

SR1 / I-95 INTERCHANGE

CONTRACT	BRIDGE NO.	1-716C	RAMP A OVER SR 7 PIER 3 REINFORCEMENT 1
28-090-03			
COUNTY	DESIGNED BY: K. D. BEAVER		
NEW CASTLE	CHECKED BY: J. S. LI		

S2-26	
SHEET NO.	279
TOTAL SHTS.	803

REINFORCING BAR LIST

PIER 1

MARK	LENGTH	NO. BARS	TYPE	A	B	C	D	E	G	H	J	K	O	R	REMARKS
PP401	9′-7″	315	T3									1′-6″	2′-6¾″		
PP801	34′-0″	144	STR.												
PF601	19′-6″	12	STR.												
PF602	6′-2″	52	2	1′-0″	4′-2″				1′-0″						
PF603	18′-7″	30	T3S	0′-8″					0′-8″	0′-4½″		2′-7″	4′-8″		
PF604	8′-11″	20	T9	0′-8″	7′-3″				1′-0″	0′-4½″					
PF701	19′-6″	42	STR.												
PF901	22′-0″	68	1	1′-3″	19′-6″				1′-3″		11¾″				
PF902E	21′-0″	92	STR.												
P501E	19′-8″ to 24′-0½″	22	T1	0′-5½″	3′-8″	5′-8½″ to 7′-10¾″	3′-8″	5′-8½″ to 7′-10¾″	0′-5½″						$\Delta_C=\Delta_E=$ 2⅝″ 2 SETS
P502E	24′-5″ to 26′-3″	18	T1	0′-5½″	3′-8″	8′-1″ to 9′-0″	3′-8″	8′-1″ to 9′-0″	0′-5½″						$\Delta_C=\Delta_E=$1⅜″ 2 SETS
P503E	28′-9″ to 29′-11″	12	T1	0′-5½″	4′-10″	9′-1″ to 9′-8″	4′-10″	9′-1″ to 9′-8″	0′-5½″						$\Delta_C=\Delta_E=$5/8 ″ 2 SETS
P504E	25′-5″ to 27′-7″	18	T1	0′-5½″	3′-8″	8′-7″ to 9′-8″	3′-8″	8′-7″ to 9′-8″	0′-5½″						$\Delta_C=\Delta_E=$1⅝″ 2 SETS
P505E	19′-8½″ to 24′-11″	22	T1	0′-5½″	3′-8″	5′-8¾″ to 8′-4″	3′-8″	5′-8¾″ to 8′-4″	0′-5½″						$\Delta_C=\Delta_E=$3⅛″ 2 SETS
P506E	19′-6″ to 37′-3″	6	STR.												$\Delta=$8′-10½″ 2 SETS
P510E	5′-10″	10	17		1′-9″	2′-4″	1′-9″								
P511E	7′-2″	8	17		1′-9″	3′-8″	1′-9″								
P601E	19′-11″	120	T3S	0′-8″					0′-8″	0′-4½″		3′-10″	4′-8″		
P602E	8′-11″	80	T9	0′-8″	7′-3″				1′-0″	0′-4½″					
P603E	23′-6″	6	16			8′-0″	15′-6″			2′-6″		15′-4″			
P604E	24′-1″	6	16			8′-0″	16′-1″			4′-11″		15′-4″			
3 P605E	6′-8″	20	2	1′-0″	4′-8″				1′-0″						
P701E	42′-8″	20	STR.												
P901E	20′-9″	92	STR.												
P1101E	46′-7″	9	2	2′-0″	42′-7″				2′-0″						
P1102E	45′-7″	9	2	2′-0″	41′-7″				2′-0″						

PIER 2

MARK	LENGTH	NO. BARS	TYPE	A	B	C	D	E	G	H	J	K	O	R	REMARKS
PP421	9′-7″	420	T3									1′-6″	2′-6¾″		
PP821	34′-0″	192	STR.												
PF621	19′-6″	12	STR.												
PF622	12′-6″	12	STR.												
PF623	6′-2″	84	2	1′-0″	4′-2″				1′-0″						
PF624	18′-4″	18	T1	0′-8″	4′-3″	4′-3″	4′-3″	4′-3″	0′-8″						
PF625	5′-11¼″	36	T9	0′-8″	4′-3¼″				1′-0″	0′-4½″					
PF626	5′-11″	72	T9	0′-8″	4′-3″				1′-0″	0′-4½″					
PF721	19′-6″	28	STR.												
PF722	12′-6″	42	STR.												
PF821	14′-4″	48	1	0′-11″	12′-6″				0′-11″						
PF1021	22′-4″	40	1	1′-5″	19′-6″				1′-5″		1′-1¼″				
PF1101E	23′-3″	72	36	2′-0″	21′-3″										
PF1102E	28′-3″	8	36	2′-0″	26′-3″										
PC601E	19′-4″	82	T1	0′-8″	4′-6″	4′-6″	4′-6″	4′-6″	0′-8″						
PC602E	6′-2¼″	164	T9	0′-8″	4′-6¼″				1′-0″	0′-4½″					
PC603E	6′-2″	264	T9	0′-8″	4′-6″				1′-0″	0′-4½″					
PC604E	18′-4″	32	T1	0′-8″	4′-3″	4′-3″	4′-3″	4′-3″	0′-8″						
PC605E	5′-11¼″	64	T9	0′-8″	4′-3¼″				1′-0″	0′-4½″					
PC606E	5′-11″	128	T9	0′-8″	4′-3″				1′-0″	0′-4½″					
PC1101E	26′-6″	28	STR.												
PC1102E	21′-6″	4	STR.												
PC1103E	20′-4″	8	STR.												
PC1104E	28′-8″	28	STR.												
PC1105E	23′-8″	4	STR.												
PC1106E	22′-6″	8	STR.												
PG501E	20′-7″	104	T1	0′-5½″	6′-2″	3′-8″	6′-2″	3′-8″	0′-5½″						
PG502E	14′-4″	52	17		4′-9″	4′-10″	4′-9″								
PG503E	7′-1½″	16	T9	0′-5½″	6′-2″				0′-6″	0′-3¾″					
PG506E	6′-2″	10	STR.												
PG507E	4′-10″	16	STR.												
PG508E	5′-9½″	16	T9	0′-5½″	4′-10″				0′-6″	0′-3¾″					
PG701E	7′-7″	30	36	1′-2″	6′-5″										
PG801E	6′-2″	18	36	1′-4″	4′-10″										
PG901E	60′-0″	20	STR.												
PG1000E	41′-1″	9	STR.												
PG1001E	28′-0″	9	STR.												

BENDING DIAGRAMS

ALL DIMENSIONS ARE FROM OUT TO OUT.

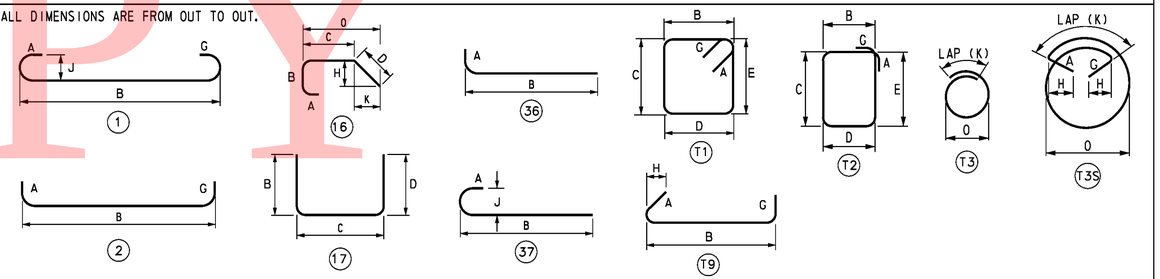

UNOFFICIAL WEB SITE COPY

O:\20832687-XM\CAD\Bridge\BR-S2\prf3_BR-S2_srf.dgn
2/10/2011
Steve_Lambert

DELAWARE
DEPARTMENT OF TRANSPORTATION

ADDENDUMS / REVISIONS

ADDENDUM NO.	
3	ADDED P605E CAP BARS, 02/18/11, RFK

SR1 / I-95 INTERCHANGE

CONTRACT	BRIDGE NO.	1-716C
28-090-03	DESIGNED BY: K.D. BEAVER	
COUNTY	CHECKED BY: J.S. LI	
NEW CASTLE		

RAMP A OVER SR 7

PIERS
REINFORCING BAR LIST 1

S2-28

SHEET NO.	TOTAL SHTS.
281	803

REINFORCING BAR LIST

PIER 3

MARK	LENGTH	NO. BARS	TYPE	A	B	C	D	E	G	H	J	K	O	R	REMARKS
PP441	9′-7″	315	T3									1′-6″	2′-6¾″		
PP841	34′-0″	144	STR.												
PF641	19′-6″	12	STR.												
PF642	6′-2″	52	2	1′-0″	4′-2″				1′-0″						
PF643	18′-7″	30	T3S	0′-8″					0′-8″	0′-4½″		2′-7″	4′-8″		
PF644	8′-11″	20	T9	0′-8″	7′-3″				1′-0″	0′-4½″					
PF741	19′-6″	42	STR.												
PF941	22′-0″	68	1	1′-3″	19′-6″				1′-3″		11¾″				
PF942E	18′-0″	92	STR.												
P541E	19′-8″ to 24′-0½″	22	T1	0′-5½″	3′-8″	5′-8½″ to 7′-10¾″	3′-8″	5′-8½″ to 7′-10¾″	0′-5½″						$\Delta_C=\Delta_E=$ 2⅝″ 2 SETS
P542E	24′-5″ to 26′-3″	18	T1	0′-5½″	3′-8″	8′-1″ to 9′-0″	3′-8″	8′-1″ to 9′-0″	0′-5½″						$\Delta_C=\Delta_E=$1⅜″ 2 SETS
P543E	28′-9″ to 29′-11″	T2	T1	0′-5½″	4′-10″	9′-1″ to 9′-8″	4′-10″	9′-1″ to 9′-8″	0′-5½″						$\Delta_C=\Delta_E=$⅝″ 2 SETS
P544E	25′-5″ to 27′-7″	18	T1	0′-5½″	3′-8″	8′-7″ to 9′-8″	3′-8″	8′-7″ to 9′-8″	0′-5½″						$\Delta_C=\Delta_E=$1⅝″ 2 SETS
P545E	19′-8½″ to 24′-11″	22	T1	0′-5½″	3′-8″	5′-8¾″ to 8′-4″	3′-8″	5′-8¾″ to 8′-4″	0′-5½″						$\Delta_C=\Delta_E=$1⅛″ 2 SETS
P546E	19′-6″ to 37′-3″	6	STR.												$\Delta=$8′-10½″ 2 SETS
P550E	5′-10″	10	17		1′-9″	2′-4″	1′-9″								
P551E	7′-2″	8	17		1′-9″	3′-8″	1′-9″								
P641E	19′-11″	102	T3S	0′-8″		8′-0″	15′-6″		0′-8″	0′-4½″		3′-10″	4′-8″		
P642E	8′-11″	68	T9	0′-8″	7′-3″	8′-0″	16′-1″		1′-0″	0′-4½″					
P643E	23′-6″	6	16							2′-6″		15′-4″			
P644E	24′-1″	6	16							4′-11″		15′-4″			
⚠3 P645E	6′-8″	20	2	1′-0″	4′-8″				1′-0″						
P741E	42′-8″	20	STR.												
P941E	17′-11″	92	STR.												
P1141E	46′-7″	9	2	2′-0″	42′-7″				2′-0″						
P1142E	45′-7″	9	2	2′-0″	41′-7″				2′-0″						

MARK	LENGTH	NO. BARS	TYPE	A	B	C	D	E	G	H	J	K	O	R	REMARKS

BENDING DIAGRAMS

ALL DIMENSIONS ARE FROM OUT TO OUT.

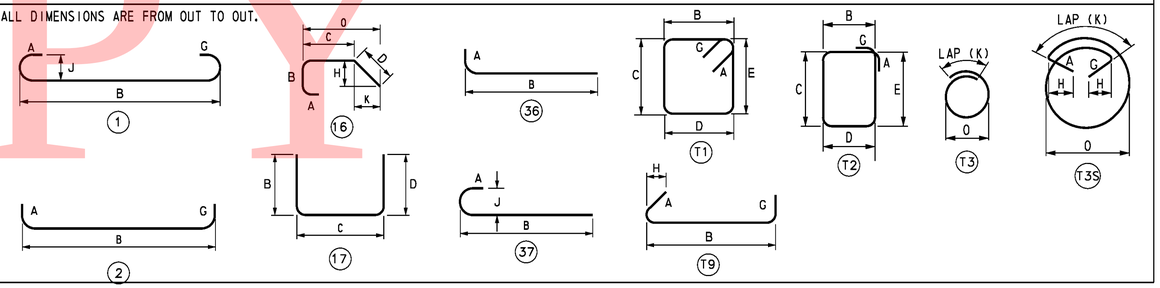

UNOFFICIAL WEBSITE COPY

DELAWARE DEPARTMENT OF TRANSPORTATION	ADDENDUMS / REVISIONS		SR1 / I-95 INTERCHANGE	CONTRACT 28-090-03	BRIDGE NO. 1-716C	RAMP A OVER SR 7 PIERS REINFORCING BAR LIST 2	S2-29 SHEET NO.
	ADDENDUM NO. ⚠3 ADDED P645E CAP BARS, 02/18/11, RFK			COUNTY NEW CASTLE	DESIGNED BY: K.D. BEAVER		282 TOTAL SHTS.
					CHECKED BY: J.S. LI		803

O:\20832687-XM\CAD\Bridge\BR-S2\pr14_BR-S2_srf.dgn
2/10/2011
Steve_Lambert

GENERAL NOTES

1. DESIGN SPECIFICATIONS
AASHTO LRFD BRIDGE DESIGN SPECIFICATIONS, 4th EDITION WITH 2009 INTERIM REVISIONS.
DELAWARE DEPARTMENT OF TRANSPORTATION BRIDGE DESIGN MANUAL, MAY 2005 INCLUDING LATEST REVISIONS. ANSI/AASHTO/AWS D1.5 BRIDGE WELDING CODE

2. LOADING
UNIT WEIGHTS OF MATERIALS SHALL BE IN ACCORDANCE WITH THE DELAWARE DESIGN MANUAL.
FUTURE OVERLAY ALLOWANCE SHALL BE 25 LBS/SQ FT.
STEEL BRIDGE DECK FORMS WHICH STAY IN PLACE (INCLUDING CONCRETE IN FORM CORRUGATIONS) SHALL BE 15 LBS/SQ FT.
VEHICLE LIVE LOAD SHALL BE HL-93, WHICH CONSISTS OF A DESIGN TRUCK OR TANDEM WITH DYNAMIC LOAD ALLOWANCE AND A LANE LOAD. RATING SHALL USE ALL DELAWARE LEGAL LOADS SPECIFIED IN THE BRIDGE DESIGN MANUAL.
BARRIER HAS BEEN DESIGNED FOR TEST LEVEL FIVE (TL-5).
FATIGUE DESIGN SHALL BE BASED ON THE FOLLOWING ONE DIRECTIONAL TRAFFIC VOLUMES:

RAMP B OVER SR 7: DESIGN ADT = 18,650, DESIGN ADTT = 2,240

FOR THERMAL LOADS, CONSIDER THE MODERATE TEMPERATURE RANGE AS STIPULATED IN THE AASHTO LRFD DESIGN SPECIFICATIONS. THE NORMAL TEMPERATURE SHALL BE CONSIDERED TO BE 60F.
FOR SEISMIC LOADS, CONSIDER SEISMIC PERFORMANCE ZONE 1, WITH A SITE CLASS = E AND IMPORTANCE CATEGORY - CRITICAL.

△3 3. PORTLAND CEMENT CONCRETE
PORTLAND CEMENT CONCRETE FOR CAST-IN-PLACE ELEMENTS SHALL BE AS FOLLOWS:
(28 DAY COMPRESSIVE STRENGTH)
~~-ITEM NO. 602007 (CLASS A, F'c=4500 PSI) - PIER ABOVE FOOTING~~
~~-ITEM NO. 602011 (CLASS A, F'c=4500 PSI) - PIER FOOTING, TOP OF PIER PILES~~
~~-ITEM NO. 602786 (CLASS A, F'c=8000 PSI) - POST-TENSIONED PIER CAP~~
~~-ITEM NO. 602013 (CLASS D, F'c=4500 PSI) - DECK~~
~~-ITEM NO. 602014 (CLASS D, F'c=4500 PSI) - APPROACH SLAB~~
~~-ITEM NO. 602015 (CLASS A, F'c=4500 PSI) - ABUTMENT, TOP OF ABUTMENT PILES~~
~~-ITEM NO. 602017 (CLASS A, F'c=4500 PSI) - BARRIER~~

602007 - PORTLAND CEMENT CONCRETE MASONRY, PIER ABOVE FOOTING, CLASS A (fc' = 4,500 PSI, PIER ABOVE FOOTING)
602011 - PORTLAND CEMENT CONCRETE MASONRY, PIER FOOTING, CLASS A (fc' = 4,500 PSI, PIER FOOTING, TOP OF PIER PILES)
602013 - PORTLAND CEMENT CONCRETE MASONRY, SUPERSTRUCTURE, CLASS D (fc' = 4,500 PSI, DECK)
602014 - PORTLAND CEMENT CONCRETE MASONRY, APPROACH SLAB, CLASS D (fc' = 4,500 PSI, APPROACH SLAB)
602015 - PORTLAND CEMENT CONCRETE MASONRY, ABUTMENT ABOVE FOOTING, CLASS A (fc' = 4,500 PSI, ABUTMENT, TOP OF ABUTMENT PILES)
602017 - PORTLAND CEMENT CONCRETE MASONRY, PARAPET, CLASS A (fc' = 4,500 PSI, BARRIER)
602786 - PORTLAND CEMENT CONCRETE MASONRY, SUBSTRUCTURE, 8000PSI (fc' = 8,000 PSI, PIER CAP)
602787 - POST TENSIONING PIER CAPS, BONDED SYSTEM, (PIER CAP)

MIX REQUIREMENTS SHALL CONFORM TO SECTION 812 OF THE DELAWARE DEPARTMENT OF TRANSPORTATION STANDARD SPECIFICATIONS. ALL EXPOSED CORNERS OF CONCRETE SHALL BE CHAMFERED WITH ¾" X ¾" MILLED CHAMFER STRIPS UNLESS NOTED OTHERWISE, EXCEPT ON UNEXPOSED FOOTINGS OR WHERE INDICATED BY THE NOTATION ON THE PLANS, "DO NOT CHAMFER". NO SLIP-FORMING OF BARRIERS IS PERMITTED, UNLESS OTHERWISE APPROVED.

4. BAR REINFORCEMENT
REINFORCING STEEL SHALL CONFORM TO AASHTO M31 (ASTM A615), GRADE 60. ALL REINFORCING STEEL SHALL HAVE A CLEAR COVER OF 2" UNLESS OTHERWISE SPECIFIED ON THE PLANS.
FUSION-BONDED EPOXY COATED REINFORCING STEEL SHALL CONFORM TO AASHTO M284 (ASTM D3963), AND SHALL BE DENOTED WITH A SUFFIX "E" IN THE BAR MARKS.

DO NOT WELD GRADE 60 REINFORCING STEEL.

5. POST-TENSIONING STEEL
ALL POST-TENSIONING STRAND TENDONS SHALL CONSIST OF 0.6 INCH DIAMETER SEVEN WIRE UNCOATED LOW RELAXATION STRANDS CONFORMING TO AASHTO M203 (ASTM A416), GRADE 270.
DUCTS SHALL BE 4½ INCH DIAMETER POLYETHYLENE/POLYPROPYLENE (PE/PP) PLASTIC DUCTS.
GROUT FOR DUCTS SHALL BE IN ACCORDANCE WITH ITEM NO. 602779 "POST TENSIONING GROUT"

6. STRUCTURAL STEEL
STRUCTURAL STEEL SHALL CONFORM TO ASTM A 709, GRADE 50W, INCLUDING THE ADDITIONAL REQUIREMENTS FOR CHARPY V-NOTCH TESTING OF AASHTO M270 FOR PRIMARY LOAD CARRYING MEMBERS UNDER TENSILE STRESS. THE PRIMARY LOAD CARRYING MEMBER COMPONENTS ARE THE FLANGES, WEBS, AND SPLICE PLATES OF THE STEEL GIRDERS. THE USE OF FRACTURE CRITICAL MEMBERS IS PROHIBITED. FATIGUE CATEGORIES D, E AND F SHALL NOT BE USED IN STRESS REVERSAL OR TENSION AREAS, EXCEPT FOR TEMPORARY CONDITIONS.

NINE (9) FEET AT THE ENDS OF EACH GIRDER AND THE END CROSS FRAMES SHALL BE PAINTED WITH A URETHANE PAINT SYSTEM IN ACCORDANCE WITH SPECIAL PROVISION #605537-URETHANE PAINT SYSTEM. THE FINAL COLOR SHALL BE FEDERAL #10076 (BROWN) OF FED-STD-595B.
COST OF PAINTING SHALL BE INCIDENTAL TO ITEM 605002, STEEL STRUCTURES.

ALL BOLTS FOR SPLICE PLATES AND CROSS FRAMES SHALL BE ⅞" DIA. IN 1⅛" DIA. HOLES AND CONFORM TO ASTM A325, TYPE 3, WITH THREADS EXCLUDED FROM SHEAR PLANES. BOLTED CONNECTIONS SHALL BE CLASS B SLIP CRITICAL CONNECTIONS, UNLESS NOTED ON THE PLANS.

7. SERVICEABILITY
LIVE LOAD DEFLECTION SHALL BE LIMITED TO L/800.
FOR REINFORCEMENT DISTRIBUTION REQUIREMENTS, CONSIDER CLASS 2 EXPOSURE CRITERIA FOR DECKS. ACCOMMODATION TO JACK GIRDERS FOR FUTURE BEARING REPLACEMENT HAS BEEN CONSIDERED IN THE DESIGN.

8. CONSTRUCTION JOINTS
KEYED CONSTRUCTION JOINTS SHALL BE 2" X 4" OR AS NOTED. ALL EXPOSED CONSTRUCTION JOINT EDGES SHALL HAVE A ¾" V-NOTCH, UNLESS OTHERWISE NOTED.

△3 ~~9. STABILIZING STRUCTURAL EXCAVATIONS~~
~~SHEETING AND SHORING SHALL BE REQUIRED FOR ANY EXCAVATION EXCEEDING FIVE (5) FEET IN HEIGHT, THE COST SHALL BE PAID UNDER ITEM NO. 207501 - IN LIEU OF SHORING, THE CONTRACTOR MAY USE A 2:1 CUT SLOPE. NO PAYMENT SHALL BE MADE FOR ADDITIONAL EXCAVATION OR FILL OUTSIDE THE LIMITS AS DEFINED IN SECTION 207 OF THE STANDARD SPECIFICATIONS.~~

10. EXCAVATION REQUIRED TO ATTAIN THE GRADE FOR INSTALLATION OF MSE WALLS SHALL BE INCIDENTAL TO ITEM NO. 602772 - MECHANICALLY STABILIZED EARTH WALLS.

11. STRUCTURAL BACKFILL SHALL CONFORM TO THE REQUIREMENTS OF BORROW TYPE C. MSE WALL BACKFILL SHALL BE AS SPECIFIED ON THE PLANS.

12. ROADWAY CLEARANCES
A MINIMUM OF 16'-6" VERTICAL CLEARANCE SHALL BE MAINTAINED ABOVE ALL ROADWAYS.
A MINIMUM OF 2'-0" HORIZONTAL CLEARANCE SHALL BE MAINTAINED FROM THE OUTSIDE EDGE OF SHOULDER OFFSET (FACE OF CURB) TO THE FACE OF ANY OBSTRUCTION. THESE CLEARANCES APPLY AT ALL TIMES INCLUDING DURING CONSTRUCTION.

BRIDGE LEGAL LOAD RATING (TONS)
RAMP B OVER SR 7

TRUCK TYPE	RATING FACTOR	SAFE LOAD CAPACITY
HS-20	1.81	65.2
S220	2.83	56.6
S327	2.69	72.6
S335	1.98	69.3
S437	2.00	73.0
T330	2.56	76.8
T435	2.16	75.6
T540	1.89	75.6

BRIDGE DESIGN LOAD RATING:
INVENTORY = 1.13
OPERATING = 1.46

13. TEST PILES
PILE LENGTHS FOR ORDERING PURPOSES SHALL BE DETERMINED BY TEST PILES. A MINIMUM OF ONE (1) PILE PER SUBSTRUCTURE, AS SHOWN ON THE PLANS, SHALL BE DYNAMICALLY TESTED BY THE CONTRACTOR IN ACCORDANCE WITH SPECIAL PROVISION 619519. TEST AND PRODUCTION PILE RE-STRIKES WILL BE PAID AS FOLLOWS:

A). ALL TEST PILE(S) WILL BE RESTRUCK AND DYNAMICALLY TESTED BY THE CONTRACTOR. THE TEST PILE RESTRIKES SHALL BE INCIDENTAL TO ITEM NO. 619519 DYNAMIC PILE TESTING BY CONTRACTOR PROVIDED THAT THEY ARE PERFORMED WITHIN FIVE (5) CALENDAR DAYS FROM INITIAL DRIVE.

B). AN ADDITIONAL PAYMENT WILL BE MADE TO THE CONTRACTOR IF HE IS DIRECTED BY THE ENGINEER TO WAIT AND RESTRIKE THE TEST PILE MORE THAN FIVE (5) CALENDAR DAYS AFTER INITIAL DRIVE. THE CONTRACTOR SHALL BE COMPENSATED AT THE FIXED PRICE OF $1,000.00 PER CALENDAR DAY FOR EVERY DAY, AFTER THE FIFTH CALENDAR DAY, UNDER ITEM NO. 619502 TEST PILE RESTRIKE. MULTIPLE TEST PILE RESTRIKES OCCURRING ON THE SAME DAY WILL ONLY BE PAID FOR AS ONE CALENDAR DAY. NO ADDITIONAL COMPENSATION WILL BE MADE REGARDLESS OF THE NUMBER OF TEST PILE RESTRIKES PERFORMED THAT DAY.

C). RESTRIKES ON PRODUCTION PILES WHICH ARE DESIGNATED TO BE DYNAMICALLY TESTED WILL NOT BE PAID UNDER ITEM NO. 619501 PRODUCTION PILE RESTRIKE. THESE PRODUCTION PILE RESTRIKES ARE INCIDENTAL TO ITEM NO. 619519 DYNAMIC PILE TESTING BY CONTRACTOR.

THE DEPARTMENT RESERVES THE RIGHT TO PERFORM DYNAMIC TESTING OF RESTRIKES.

14. THE CONCRETE PIER CAPS SHOWN ON THE PLANS SHALL BE USED. NO OTHER ALTERNATES WILL BE CONSIDERED.

△3 15. MASS CONCRETE
PIER POST-TENSIONED CAP IS DESIGNED AS MASS CONCRETE.
SEE SPECIAL PROVISIONS.

NOTE:

LOAD RATING IS IN ACCORDANCE WITH THE LOAD AND RESISTANCE FACTOR RATING (LRFR) METHOD.

CROSS REFERENCE NOTE:

FOR MSE WALL NOTES, SEE DWG S3-13.

UNOFFICIAL WEBSITE COPY

O:\2032687-XM\CAD\Bridge\BR-S3\gen01_BR-S3_sr1.dgn
2/24/2011
Steve_Lambert

DELAWARE DEPARTMENT OF TRANSPORTATION

ADDENDUMS / REVISIONS	
ADDENDUM NO. △3 REV. NOTE 3, DELETED NOTE 9, ADDED	
NOTE 15, 02/18/11, SAM	

SR1 / I-95 INTERCHANGE

CONTRACT	BRIDGE NO.	1-268A
28-090-03	DESIGNED BY: R. F. KIRCHNER	
COUNTY	CHECKED BY: J. S. LI	
NEW CASTLE		

RAMP B OVER SR 7
GENERAL NOTES

SHEET NO.	S3-2
TOTAL SHTS.	308
	803

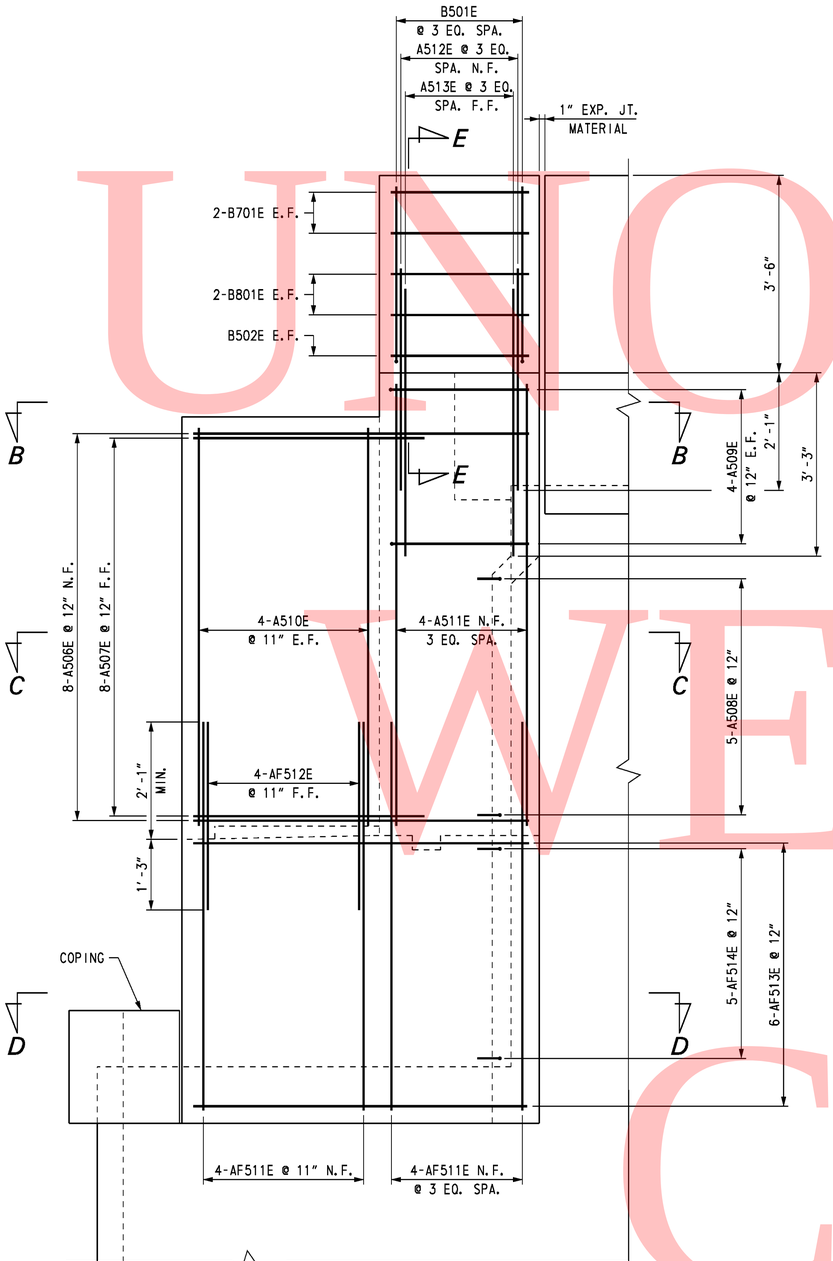

WINGWALL 1 SIDE ELEVATION

SCALE: ¾" = 1'-0"

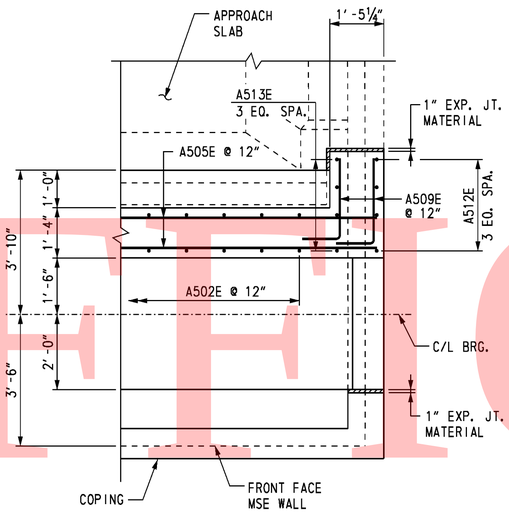

SECTION B-B

SCALE: ½" = 1'-0"

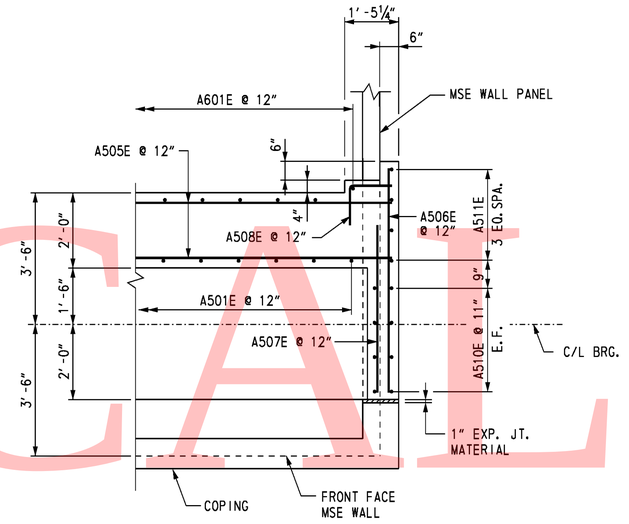

SECTION C-C

SCALE: ½" = 1'-0"

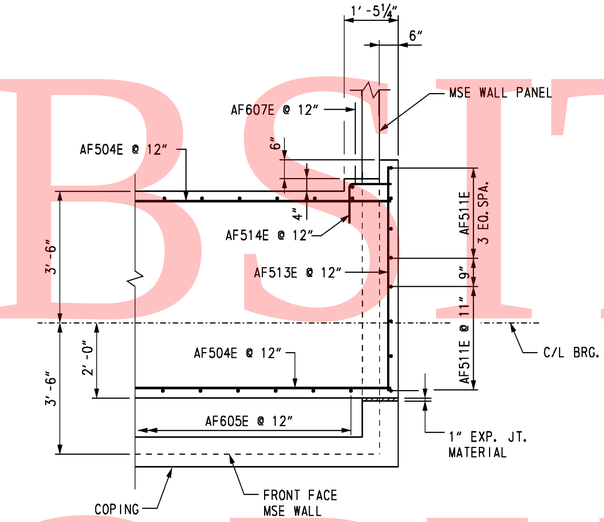

SECTION D-D

SCALE: ½" = 1'-0"

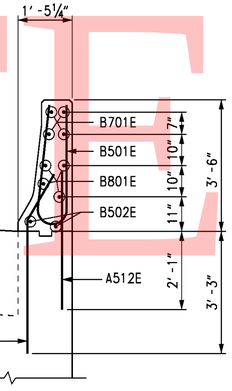

SECTION E-E

SCALE: ½" = 1'-0"

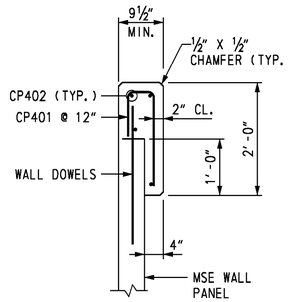

⚠3 COPING DETAIL

SCALE: ¾" = 1'-0"

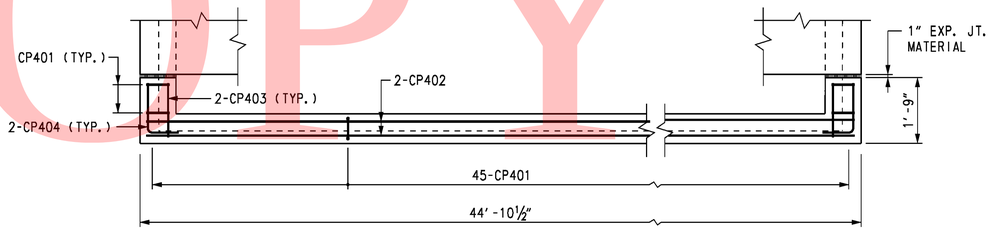

⚠3 ABUTMENT MSE WALL COPING PLAN

SCALE: ½" = 1'-0"

CROSS REFERENCE NOTES:

1. FOR ABUTMENT A PLAN AND ELEVATION, SEE DWG. S3-5.
2. FOR ABUTMENT A ELEVATION REINFORCEMENT DETAILS, SEE DWG. S3-7.
3. FOR REINFORCING BAR LIST, SEE DWG. S3-15.

UNOFFICIAL WEBSITE COPY

O:\20822687-XM\CAD\Bridge\BR-S3\ab05_BR-S3_sr1.dgn
2/10/2011
Steve_Lambert

DELAWARE DEPARTMENT OF TRANSPORTATION

ADDENDUMS / REVISIONS	
ADDENDUM NO. ⚠3 ADDED COPING REINF., 02/18/11, RFK	

SR1 / I-95 INTERCHANGE

CONTRACT	BRIDGE NO.	1-268A
28-090-03	DESIGNED BY:	K. D. BEAVER
COUNTY	CHECKED BY:	J. S. LI
NEW CASTLE		

RAMP B OVER SR 7

ABUTMENT A REINFORCEMENT 2

S3-8
SHEET NO.
314
TOTAL SHTS.
803

UNOFFICAL WEBSITE COPY

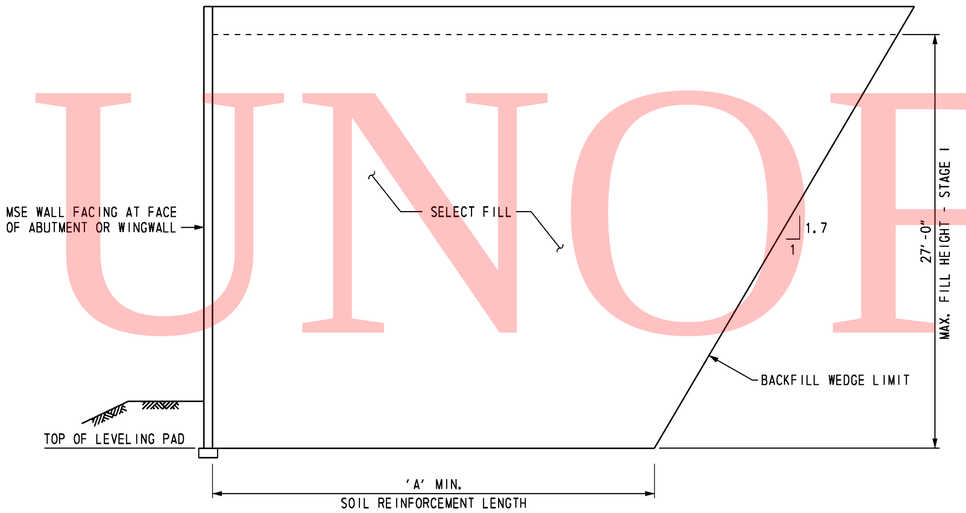

SOIL PROFILE SECTION
ABUTMENT A AND WINGWALLS I AND II

NOT TO SCALE

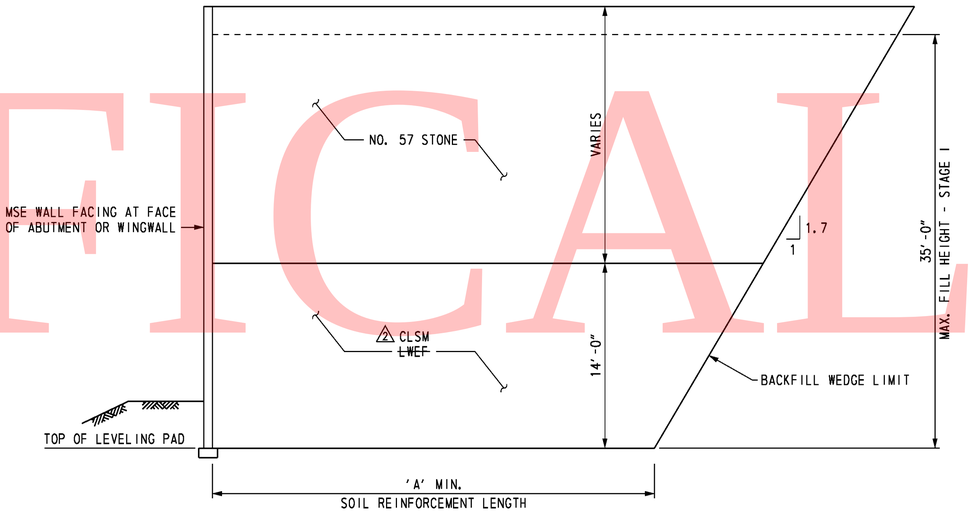

SOIL PROFILE SECTION
ABUTMENT B AND WINGWALLS III AND IV

NOT TO SCALE

MINIMUM REINFORCED ZONE WIDTH (A) FEET

ABUTMENT A	
FACE OF ABUTMENT	26.0
3 ~~WINGWALLS I AND II~~	~~26.0~~
~~3~~ ABUTMENT B	
FACE OF ABUTMENT	27.0
3 ~~WINGWALLS III AND IV~~	27.0

SOIL PROPERTIES

	SOIL TYPE	UNIT WEIGHT (PCF)	DRAINED ANGLE OF FRICTION (DEGREES)	UNDRAINED SHEAR (PSF)	FACTORED BEARING RESISTANCE (KSF)
	SELECT FILL	125	34	-	-
2	~~LWEF~~	~~40~~	~~38~~	-	-
	NO. 57 STONE	105	38	-	-
	FOUNDATION SOIL:				
	ABUTMENT A	120	24	1400	5.5
	ABUTMENT B	120	24	1250	5.5
2	CONTROLLED LOW STRENGTH MATERIAL (CLSM)	40	38	-	-

FOUNDATION NOTES

THE FACTORED BEARING RESISTANCE SHALL BE VERIFIED PRIOR TO CONSTRUCTION OF THE MSE WALL.

THE INTERNAL STABILITY OF THE MSE WALL SHALL BE DESIGNED BY THE CONTRACTOR USING THE SOIL PARAMETERS PROVIDED FOR EACH STRUCTURE LOCATION. THE INTERNAL STABILITY CALCULATIONS SHALL BE SIGNED AND SEALED BY A PROFESSIONAL ENGINEER LICENSED IN THE STATE OF DELAWARE AS INDICATED IN THE PROJECT SPECIFICATIONS.

ISOLATED AREAS OF EXISTING FILL MAY BE ENCOUNTERED DURING CONSTRUCTION OF THIS MSE WALL. EXISTING FILL SHALL BE UNDERCUT TO EXPOSE UNDISTURBED NATURAL SOIL. UNDERCUTTING AND BACKFILLING WILL BE MEASURED AND PAID IN ACCORDANCE WITH THE SPECIFICATIONS.

A MINIMUM 7-DAY QUARANTINE PERIOD SHALL BE REQUIRED AFTER CONSTRUCTION OF THE WALL TO THE "MAX. FILL HEIGHT - STAGE 1" INDICATED ON THE SOIL PROFILE SECTION. NO FURTHER FILL SHALL BE PLACED UNTIL AUTHORIZED BY THE ENGINEER. ONCE AUTHORIZATION IS GIVEN, FILL SHALL BE PLACED IN ADDITIONAL INCREMENTS OF 5 FEET IN HEIGHT, WITH THE SAME QUARANTINE PERIOD AND AUTHORIZATION REQUIRED AT EACH INCREMENT. AN ADDITIONAL QUARANTINE PERIOD OF
2 ~~30 TO~~ 60 DAYS IS REQUIRED AFTER CONSTRUCTION OF THE MSE WALL TO ITS FULL HEIGHT. NO FURTHER CONSTRUCTION SHALL BE PERMITTED UNTIL AUTHORIZED BY THE ENGINEER. A TOTAL ESTIMATED SETTLEMENT OF APPROXIMATELY FOUR TO FIVE INCHES IS ANTICIPATED.

3 FOR WINGWALLS I AND II, SOIL REINFORCEMENT LENGTH RATIO SHALL BE L/H=1.2. FOR WINGWALL IV, SOIL REINFORCEMENT LENGTH RATIO SHALL BE L/H=1.2, AND LESS THAN (A)=27.0 FEET. NO. 57 STONE BACKFILL APPLIES ABOVE ELEVATION 78.00.

S3-14

DELAWARE DEPARTMENT OF TRANSPORTATION

ADDENDUMS / REVISIONS

ADDENDUM NO. 2 REVISED QUARANTINE PERIOD AND SOIL PROPERTIES, 01/26/11, RFK	
ADDENDUM NO. 3 REV. BACKFILL PROFILE, 02/18/11, RFK	

SR1 / I-95 INTERCHANGE

CONTRACT 28-090-03	BRIDGE NO. 1-268A	RAMP B OVER SR 7
COUNTY NEW CASTLE	DESIGNED BY: R. F. KIRCHNER	WINGWALL DETAILS 2
	CHECKED BY: G.P. MISTRY	

SHEET NO.	320
TOTAL SHTS.	803

O:\20832687-XM\CAD\Bridge\BR-S3\rd04_BR-S3_srf.dgn
2/10/2011
Steve_Lambert

REINFORCING BAR LIST

ABUTMENT A

MARK	LENGTH	NO. BARS	TYPE	A	B	C	D	E	G	H	J	K	O	R	REMARKS
AP401E	6′-7″	95	T3									1′-8″	1′-7″		
AP801E	18′-11″	40	37	0′-11″	18′-0″						0′-8″				
AF501E	27′-3″	6	STR.												
AF502E	17′-4″	6	STR.												
AF503E	28′-3″	4	STR.												
AF504E	18′-4″	6	STR.												
AF505E	10′-7″	2	STR.												
AF506E	9′-3″	2	STR.												
AF507E	9′-3″	6	STR.												
AF508E	12′-3″	18	36	0′-10″	11′-5″										
AF509E	8′-8″	6	36	0′-10″	7′-10″										
AF510E	3′-8″	44	STR.												
AF511E	7′-4″	16	STR.												
AF512E	4′-6″	8	STR.												
AF513E	6′-0″	12	STR.												
AF514E	2′-2″	10	17		1′-1″	1′-1″									
AF601E	17′-4″	8	T2	1′-0″	5′-2″	2′-6″	5′-2″	2′-6″	1′-0″						
AF602E	17′-10″	10	T2	1′-0″	5′-2″	2′-9″	5′-2″	2′-9″	1′-0″						
AF603E	19′-0″	10	T2	1′-0″	5′-2″	3′-4″	5′-2″	3′-4″	1′-0″						
AF604E	20′-0″	10	T2	1′-0″	5′-2″	3′-10″	5′-2″	3′-10″	1′-0″						
AF605E	21′-6″	8	T2	1′-0″	5′-2″	4′-7″	5′-2″	4′-7″	1′-0″						
AF606E	4′-3″	42	STR.												
AF607E	6′-10″	2	STR.												
A501E	7′-9½″	44	STR.												
A502E	7′-1″	42	17		3′-0″	1′-0″	3′-1″								
A503E	3′-9″	42	16		1′-6″	0′-10″	1′-5″								
A504E	28′-4″	20	STR.												
A505E	18′-5″	20	STR.												
A506E	6′-0″	16	STR.												
A507E	4′-7″	16	STR.												
A508E	2′-2″	10	17		1′-1″	1′-1″									
A509E	3′-3″	16	36	2′-3″	1′-0″										
A510E	6′-7″	16	STR.												
A511E	9′-3″	8	STR.												
A512E	3′-10″	8	STR.												
A513E	4′-8″	8	16			3′-5″	1′-3″			1′-0¼″		0′-8¾″			
A601E	5′-5″	44	STR.												
B501E	6′-9″	8	H1		2′-9½″	1′-2″	2′-9½″			0′-5″				0′-4½″	
B502E	2′-0″	4	STR.												
B701E	2′-0″	8	STR.												
B801E	2′-0″	8	STR.												
3 CP401	2′-9½″	49	17		1′-8″	0′-5½″	0′-8″								
3 CP402	44′-6″	4	STR.												
3 CP403	1′-5″	4	STR.												
3 CP404	2′-5″	4	17		1′-0″	1′-5″									

ABUTMENT B

MARK	LENGTH	NO. BARS	TYPE	A	B	C	D	E	G	H	J	K	O	R	REMARKS
AP431E	6′-7″	95	T3									1′-8″	1′-7″		
AP831E	18′-11″	40	37	0′-11″	18′-0″						0′-8″				
AF531E	27′-3″	6	STR.												
AF532E	17′-4″	6	STR.												
AF533E	28′-3″	4	STR.												
AF534E	18′-4″	6	STR.												
AF535E	11′-10″	2	STR.												
AF536E	9′-3″	2	STR.												
AF537E	9′-3″	6	STR.												
AF538E	12′-3″	18	36	0′-10″	11′-5″										
AF539E	8′-8″	6	36	0′-10″	7′-10″										
AF540E	3′-8″	44	STR.												
AF541E	7′-4″	16	STR.												
AF542E	4′-6″	8	STR.												
AF543E	6′-0″	12	STR.												
AF544E	2′-2″	10	17		1′-1″	1′-1″									
AF631E	17′-4″	8	T2	1′-0″	5′-2″	2′-6″	5′-2″	2′-6″	1′-0″						
AF632E	18′-0″	10	T2	1′-0″	5′-2″	2′-10″	5′-2″	2′-10″	1′-0″						
AF633E	19′-2″	10	T2	1′-0″	5′-2″	3′-5″	5′-2″	3′-5″	1′-0″						
AF634E	20′-2″	10	T2	1′-0″	5′-2″	3′-11″	5′-2″	3′-11″	1′-0″						
AF635E	21′-6″	8	T2	1′-0″	5′-2″	4′-7″	5′-2″	4′-7″	1′-0″						
AF636E	4′-3″	42	STR.												
AF637E	6′-10″	2	STR.												
A531E	7′-10½″	44	STR.												
A532E	7′-1″	42	17		3′-0″	1′-0″	3′-1″								
A533E	3′-9″	42	16		1′-6″	0′-10″	1′-5″								
A534E	18′-5″	20	STR.												
A535E	28′-4″	20	STR.												
A536E	6′-0″	16	STR.												
A537E	4′-7″	16	STR.												
A538E	2′-2″	10	17		1′-1″	1′-1″									
A539E	3′-3″	16	36	2′-3″	1′-0″										
A540E	6′-9″	16	STR.												
A541E	9′-4″	8	STR.												
A542E	3′-10″	8	STR.												
A543E	4′-8″	8	16			3′-5″	1′-3″			1′-0¼″		0′-8¾″			
A631E	5′-6″	44	STR.												
B531E	6′-9″	8	H1		2′-9½″	1′-2″	2′-9½″			0′-5″				0′-4½″	
B532E	2′-0″	4	STR.												
B731E	2′-0″	8	STR.												
B831E	2′-0″	8	STR.												
3 CP401	2′-9½″	49	17		1′-8″	0′-5½″	0′-8″								
3 CP402	44′-6″	4	STR.												
3 CP403	1′-5″	4	STR.												
3 CP404	2′-5″	4	17		1′-0″	1′-5″									

BENDING DIAGRAMS

ALL DIMENSIONS ARE FROM OUT TO OUT.

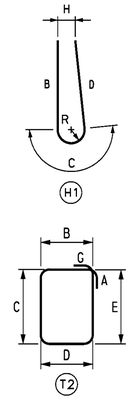

UNOFFICIAL WEBSITE COPY

O:\20832687-XM\CAD\Bridge\BR-SS\sb08_BR-SS_srf.dgn
2/10/2011
Steve_Lambert

DELAWARE
DEPARTMENT OF TRANSPORTATION

ADDENDUMS / REVISIONS

ADDENDUM NO.	
3	ADDED COPING REINF., 02/18/11, RFK

SR1 / I-95 INTERCHANGE

CONTRACT	BRIDGE NO.	1-268A
28-090-03	DESIGNED BY: K.D. BEAVER	
COUNTY	CHECKED BY: J.S. LI	
NEW CASTLE		

RAMP B OVER SR 7

ABUTMENTS A AND B
REINFORCING BAR LIST

S3-15

SHEET NO.	321
TOTAL SHTS.	803

GENERAL NOTES

1. DESIGN SPECIFICATIONS
AASHTO LRFD BRIDGE DESIGN SPECIFICATIONS, 4th EDITION WITH 2009 INTERIM REVISIONS.
DELAWARE DEPARTMENT OF TRANSPORTATION BRIDGE DESIGN MANUAL, MAY 2005 INCLUDING LATEST REVISIONS. ANSI/AASHTO/AWS D1.5 BRIDGE WELDING CODE.

2. LOADING
UNIT WEIGHTS OF MATERIALS SHALL BE IN ACCORDANCE WITH THE DELAWARE DESIGN MANUAL.
FUTURE OVERLAY ALLOWANCE SHALL BE 25 LBS/SQ FT.
STEEL BRIDGE DECK FORMS WHICH STAY IN PLACE (INCLUDING CONCRETE IN FORM CORRUGATIONS) SHALL BE 15 LBS/SQ FT.
VEHICLE LIVE LOAD SHALL BE HL-93, WHICH CONSISTS OF A DESIGN TRUCK OR TANDEM WITH DYNAMIC LOAD ALLOWANCE AND A LANE LOAD. RATING SHALL USE ALL DELAWARE LEGAL LOADS SPECIFIED IN THE BRIDGE DESIGN MANUAL.
BARRIER HAS BEEN DESIGNED FOR TEST LEVEL FIVE (TL-5).
FATIGUE DESIGN SHALL BE BASED ON THE FOLLOWING ONE DIRECTIONAL TRAFFIC VOLUMES:

RAMP C OVER SR 7: DESIGN ADT = 7,175, DESIGN ADTT = 215

FOR THERMAL LOADS, CONSIDER THE MODERATE TEMPERATURE RANGE AS STIPULATED IN THE AASHTO LRFD DESIGN SPECIFICATIONS. THE NORMAL TEMPERATURE SHALL BE CONSIDERED TO BE 60F.
FOR SEISMIC LOADS, CONSIDER SEISMIC PERFORMANCE ZONE 1, WITH A SITE CLASS = E AND IMPORTANCE CATEGORY - CRITICAL.

△3 3. PORTLAND CEMENT CONCRETE
PORTLAND CEMENT CONCRETE FOR CAST-IN-PLACE ELEMENTS SHALL BE AS FOLLOWS:
(28 DAY COMPRESSIVE STRENGTH)
~~ITEM NO. 602007 (CLASS A, F'c=4500 PSI) - PIER ABOVE FOOTING~~
~~ITEM NO. 602011 (CLASS A, F'c=4500 PSI) - PIER FOOTING, TOP OF PIER PILES~~
~~ITEM NO. 602785 (CLASS A, F'c=6000 PSI) - POST-TENSIONED PIER CAP~~
~~ITEM NO. 602013 (CLASS D, F'c=4500 PSI) - DECK~~
~~ITEM NO. 602014 (CLASS D, F'c=4500 PSI) - APPROACH SLAB~~
~~ITEM NO. 602015 (CLASS A, F'c=4500 PSI) - ABUTMENT, TOP OF ABUTMENT PILES~~
~~ITEM NO. 602017 (CLASS A, F'c=4500 PSI) - BARRIER~~

602007 - PORTLAND CEMENT CONCRETE MASONRY, PIER ABOVE FOOTING, CLASS A (fc' = 4,500 PSI, PIER ABOVE FOOTING)
602011 - PORTLAND CEMENT CONCRETE MASONRY, PIER FOOTING, CLASS A (fc' = 4,500 PSI, PIER FOOTING, TOP OF PIER PILES)
602013 - PORTLAND CEMENT CONCRETE MASONRY, SUPERSTRUCTURE, CLASS D (fc' = 4,500 PSI, DECK)
602014 - PORTLAND CEMENT CONCRETE MASONRY, APPROACH SLAB, CLASS D (fc' = 4,500 PSI, APPROACH SLAB)
602015 - PORTLAND CEMENT CONCRETE MASONRY, ABUTMENT ABOVE FOOTING, CLASS A (fc' = 4,500 PSI, ABUTMENT, TOP OF ABUTMENT PILES)
602017 - PORTLAND CEMENT CONCRETE MASONRY, PARAPET, CLASS A (fc' = 4,500 PSI, BARRIER)
602785 - PORTLAND CEMENT CONCRETE MASONRY, SUBSTRUCTURE, 6000PSI (fc' = 6,000 PSI, PIER CAP)
602787 - POST TENSIONING PIER CAPS, BONDED SYSTEM, (PIER CAP)

MIX REQUIREMENTS SHALL CONFORM TO SECTION 812 OF THE DELAWARE DEPARTMENT OF TRANSPORTATION STANDARD SPECIFICATIONS. ALL EXPOSED CORNERS OF CONCRETE SHALL BE CHAMFERED WITH ¾" X ¾" MILLED CHAMFER STRIPS UNLESS NOTED OTHERWISE, EXCEPT ON UNEXPOSED FOOTINGS OR WHERE INDICATED BY THE NOTATION ON THE PLANS, "DO NOT CHAMFER". NO SLIP-FORMING OF BARRIERS IS PERMITTED, UNLESS OTHERWISE APPROVED.

4. BAR REINFORCEMENT
REINFORCING STEEL SHALL CONFORM TO AASHTO M31 (ASTM A615), GRADE 60. ALL REINFORCING STEEL SHALL HAVE A CLEAR COVER OF 2" UNLESS OTHERWISE SPECIFIED ON THE PLANS.
FUSION-BONDED EPOXY COATED REINFORCING STEEL SHALL CONFORM TO AASHTO M284 (ASTM D3963), AND SHALL BE DENOTED WITH A SUFFIX "E" IN THE BAR MARKS.

DO NOT WELD GRADE 60 REINFORCING STEEL.

5. POST-TENSIONING STEEL
ALL POST-TENSIONING BAR TENDONS SHALL CONFORM TO ASTM A722, GRADE 150 KSI (TYPE II), AND SHALL BE EPOXY COATED. ACCESSORIES INCLUDING ANCHOR PLATE AND NUT SHALL ALSO BE EPOXY COATED. DUCTS SHALL BE SEMI-RIGID METAL. GROUT FOR DUCTS SHALL BE IN ACCORDANCE WITH ITEM NO. 602779 "POST TENSIONING GROUT"

6. STRUCTURAL STEEL
STRUCTURAL STEEL SHALL CONFORM TO ASTM A 709, GRADE 50W, NCLUDING THE ADDITIONAL REQUIREMENTS FOR CHARPY V-NOTCH TESTING OF AASHTO M270 FOR PRIMARY LOAD CARRYING MEMBERS UNDER TENSILE STRESS. THE PRIMARY LOAD CARRYING MEMBER COMPONENTS ARE THE FLANGES, WEBS, AND SPLICE PLATES OF THE STEEL GIRDERS. THE USE OF FRACTURE CRITICAL MEMBERS IS PROHIBITED. FATIGUE CATEGORIES D, E AND F SHALL NOT BE USED IN STRESS REVERSAL OR TENSION AREAS, EXCEPT FOR TEMPORARY CONDITIONS.

EIGHT (8) FEET AT THE ENDS OF EACH GIRDER AND THE END CROSS FRAMES SHALL BE PAINTED WITH A URETHANE PAINT SYSTEM IN ACCORDANCE WITH SPECIAL PROVISION #605537-URETHANE PAINT SYSTEM. THE FINAL COLOR SHALL BE FEDERAL #10076 (BROWN) OF FED-STD-595B. COST OF PAINTING SHALL BE INCIDENTAL TO ITEM 605002, STEEL STRUCTURES.

△2 THE AREA IN CONTACT WITH THE INTEGRAL PIER CAP CONCRETE SHALL BE PAINTED WITH ONE COAT OF PRIMER AFTER THE SHEAR STUDS ARE INSTALLED.

ALL BOLTS FOR SPLICE PLATES AND CROSS FRAMES SHALL BE ⅞" DIA. IN 1⅛" DIA. HOLES AND CONFORM TO ASTM A325, TYPE 3, WITH THREADS EXCLUDED FROM SHEAR PLANES. BOLTED CONNECTIONS SHALL BE CLASS B SLIP CRITICAL CONNECTIONS, UNLESS NOTED ON THE PLANS.

△3 ANCHORAGE PLATES SHOWN FOR THE HIGH STRENGTH POST-TENSIONING BARS SHALL BE ASTM A36.

7. SERVICEABILITY
LIVE LOAD DEFLECTION SHALL BE LIMITED TO L/800.
FOR REINFORCEMENT DISTRIBUTION REQUIREMENTS, CONSIDER CLASS 2 EXPOSURE CRITERIA FOR DECKS. ACCOMMODATION TO JACK GIRDERS FOR FUTURE BEARING REPLACEMENT HAS BEEN CONSIDERED IN THE DESIGN.

8. CONSTRUCTION JOINTS
KEYED CONSTRUCTION JOINTS SHALL BE 2" X 4" OR AS NOTED. ALL EXPOSED CONSTRUCTION JOINT EDGES SHALL HAVE A ¾" V-NOTCH, UNLESS OTHERWISE NOTED.

△3 ~~9. STABILIZING STRUCTURAL EXCAVATIONS~~
~~SHEETING AND SHORING SHALL BE REQUIRED FOR ANY EXCAVATION EXCEEDING FIVE (5) FEET IN HEIGHT, THE COST SHALL BE PAID UNDER ITEM NO. 207501 - IN LIEU OF SHORING, THE CONTRACTOR MAY USE A 2:1 CUT SLOPE. NO PAYMENT SHALL BE MADE FOR ADDITIONAL EXCAVATION OR FILL OUTSIDE THE LIMITS AS DEFINED IN SECTION 207 OF THE STANDARD SPECIFICATIONS.~~

10. EXCAVATION REQUIRED TO ATTAIN THE GRADE FOR INSTALLATION OF MSE WALLS SHALL BE INCIDENTAL TO ITEM NO. 602772 - MECHANICALLY STABILIZED EARTH WALLS.

11. STRUCTURAL BACKFILL SHALL CONFORM TO THE REQUIREMENTS OF BORROW TYPE C. MSE WALL BACKFILL SHALL BE AS SPECIFIED ON THE PLANS.

12. ROADWAY CLEARANCES
A MINIMUM OF 16'-6" VERTICAL CLEARANCE SHALL BE MAINTAINED ABOVE ALL ROADWAYS.
A MINIMUM OF 2'-0" HORIZONTAL CLEARANCE SHALL BE MAINTAINED FROM THE OUTSIDE EDGE OF SHOULDER OFFSET (FACE OF CURB) TO THE FACE OF ANY OBSTRUCTION. THESE CLEARANCES APPLY AT ALL TIMES INCLUDING DURING CONSTRUCTION.

BRIDGE LEGAL LOAD RATING (TONS) RAMP C OVER SR 7		
TRUCK TYPE	RATING FACTOR	SAFE LOAD CAPACITY
HS-20	1.77	63.7
S220	2.84	56.8
S327	2.49	67.2
S335	1.89	66.1
S437	1.84	67.1
T330	2.46	73.8
T435	2.14	74.9
T540	1.90	76.0

BRIDGE DESIGN LOAD RATING:
INVENTORY = 1.27
OPERATING = 1.65

13. TEST PILES
PILE LENGTHS FOR ORDERING PURPOSES SHALL BE DETERMINED BY TEST PILES. A MINIMUM OF ONE (1) PILE PER SUBSTRUCTURE, AS SHOWN ON THE PLANS, SHALL BE DYNAMICALLY TESTED BY THE CONTRACTOR IN ACCORDANCE WITH SPECIAL PROVISION 619519. TEST AND PRODUCTION PILE RE-STRIKES WILL BE PAID AS FOLLOWS:

A). ALL TEST PILE(S) WILL BE RESTRUCK AND DYNAMICALLY TESTED BY THE CONTRACTOR. THE TEST PILE RESTRIKES SHALL BE INCIDENTAL TO ITEM NO. 619519 DYNAMIC PILE TESTING BY CONTRACTOR PROVIDED THAT THEY ARE PERFORMED WITHIN FIVE (5) CALENDAR DAYS FROM INITIAL DRIVE.

B). AN ADDITIONAL PAYMENT WILL BE MADE TO THE CONTRACTOR IF HE IS DIRECTED BY THE ENGINEER TO WAIT AND RESTRIKE THE TEST PILE MORE THAN FIVE (5) CALENDAR DAYS AFTER INITIAL DRIVE. THE CONTRACTOR SHALL BE COMPENSATED AT THE FIXED PRICE OF $1,000.00 PER CALENDAR DAY FOR EVERY DAY, AFTER THE FIFTH CALENDAR DAY, UNDER ITEM NO. 619502 TEST PILE RESTRIKE. MULTIPLE TEST PILE RESTRIKES OCCURRING ON THE SAME DAY WILL ONLY BE PAID FOR AS ONE CALENDAR DAY. NO ADDITIONAL COMPENSATION WILL BE MADE REGARDLESS OF THE NUMBER OF TEST PILE RESTRIKES PERFORMED THAT DAY.

C). RESTRIKES ON PRODUCTION PILES WHICH ARE DESIGNATED TO BE DYNAMICALLY TESTED WILL NOT BE PAID UNDER ITEM NO. 619501 PRODUCTION PILE RESTRIKE. THESE PRODUCTION PILE RESTRIKES ARE INCIDENTAL TO ITEM NO. 619519 DYNAMIC PILE TESTING BY CONTRACTOR.

THE DEPARTMENT RESERVES THE RIGHT TO PERFORM DYNAMIC TESTING OF RESTRIKES.

14. THE CONCRETE PIER CAPS SHOWN ON THE PLANS SHALL BE USED. NO OTHER ALTERNATES WILL BE CONSIDERED.

△3 15. MASS CONCRETE
PIER POST-TENSIONED CAP IS DESIGNED AS MASS CONCRETE.
SEE SPECIAL PROVISIONS.

NOTE:

LOAD RATING IS IN ACCORDANCE WITH THE LOAD AND RESISTANCE FACTOR RATING (LRFR) METHOD.

CROSS REFERENCE NOTE:

FOR MSE WALL NOTES, SEE DWG S4-14.

UNOFFICIAL WEBSITE COPY

O:\20852687-XM\CAD\Bridge\BR-S4\gen01_BR-S4_srf.dgn
2/24/2011
Steve_Lambert

DELAWARE DEPARTMENT OF TRANSPORTATION

ADDENDUMS / REVISIONS	
ADDENDUM NO. △2 REV. NOTE 6, 01/26/11, SAM	
ADDENDUM NO. △3 REV. NOTES 3 & 6, DELETED NOTE 9,	
ADDED NOTE 15, 02/18/11, SAM	

SR1 / I-95 INTERCHANGE

CONTRACT	BRIDGE NO.	1-717A
28-090-03	DESIGNED BY: R. F. KIRCHNER	
COUNTY	CHECKED BY: J. S. LI	
NEW CASTLE		

RAMP C OVER SR 7
GENERAL NOTES

S4-2
SHEET NO.
350
TOTAL SHTS.
803

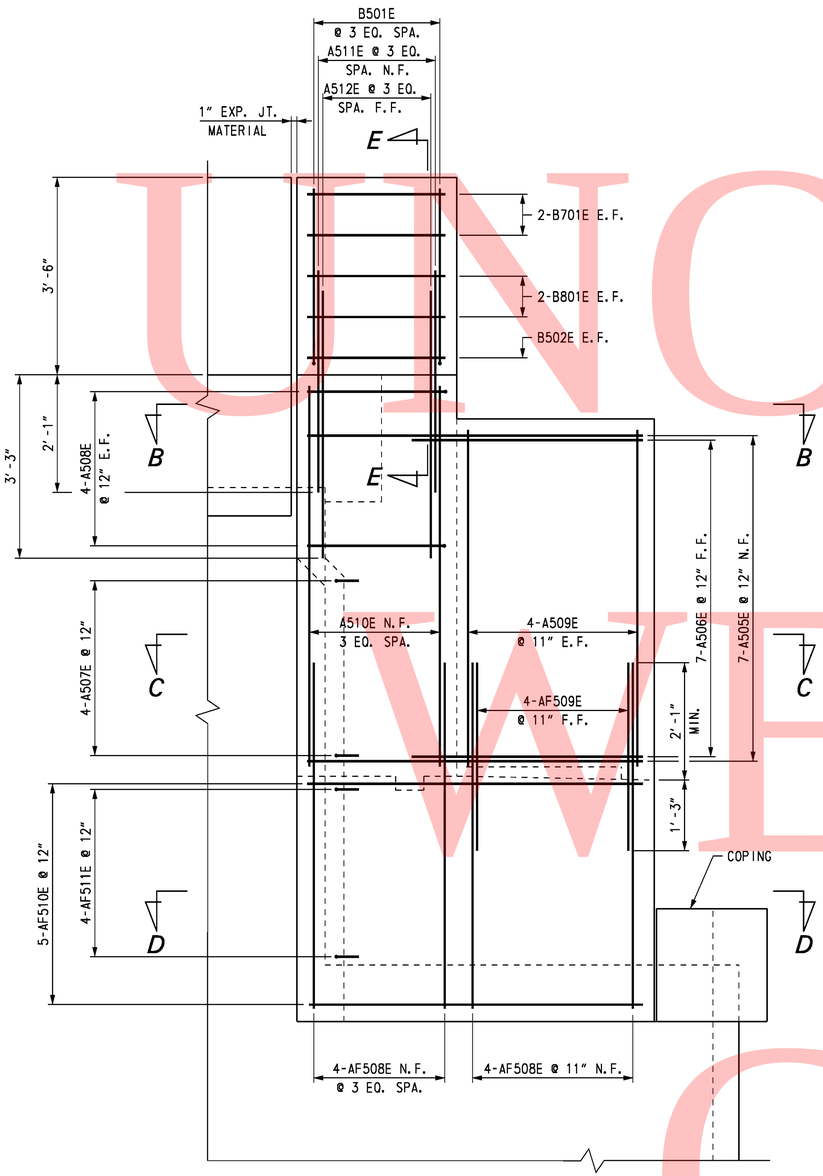

WINGWALL II SIDE ELEVATION
SCALE: ¾" = 1'-0"

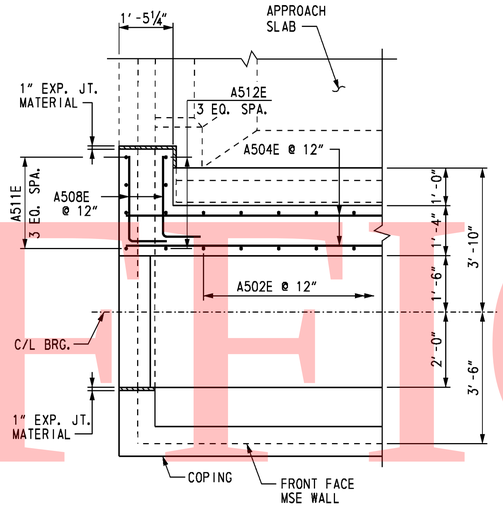

SECTION B-B
SCALE: ½" = 1'-0"

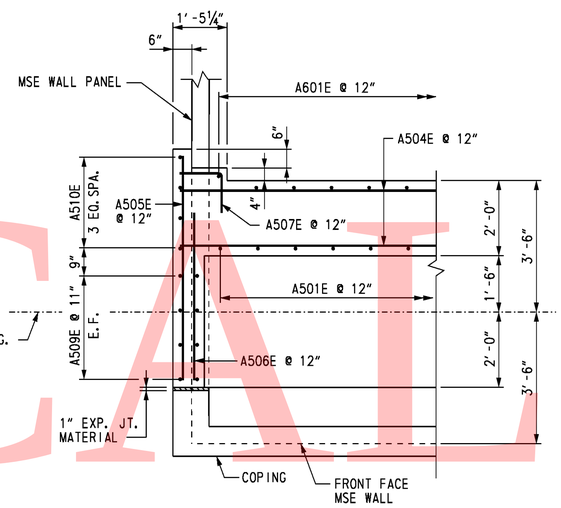

SECTION C-C
SCALE: ½" = 1'-0"

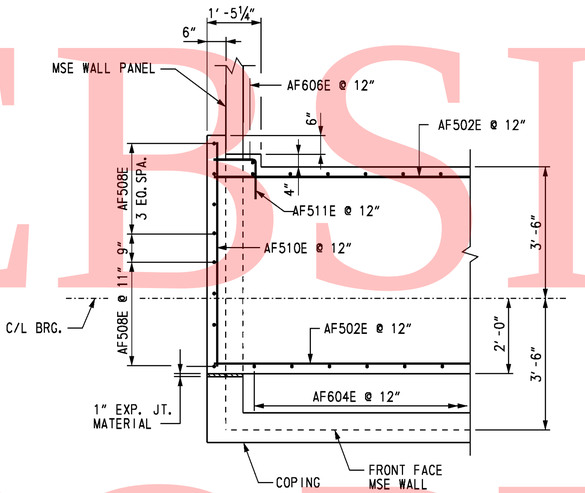

SECTION D-D
SCALE: ½" = 1'-0"

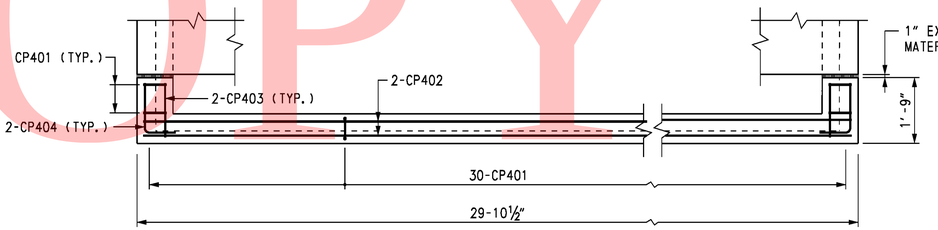

⚠5 ABUTMENT MSE WALL COPING PLAN
SCALE: ½" = 1'-0"

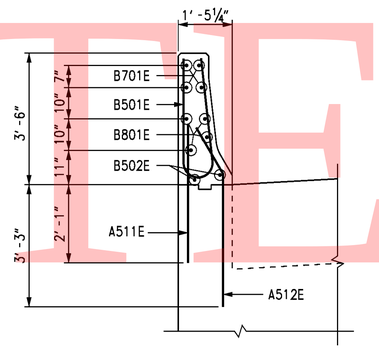

SECTION E-E
SCALE: ½" = 1'-0"

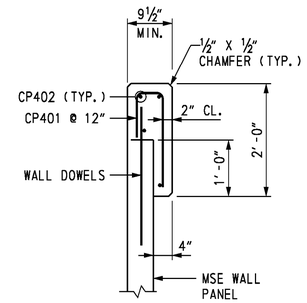

⚠5 COPING DETAIL
SCALE: ¾" = 1'-0"

NOTE:

WINGWALL I SIDE ELEVATION IS SIMILAR TO WINGWALL II.

CROSS REFERENCE NOTES:

1. FOR ABUTMENT A PLAN AND ELEVATION, SEE DWG. S4-5.
2. FOR ABUTMENT A ELEVATION REINFORCEMENT DETAILS, SEE DWG. S4-7.
3. FOR REINFORCING BAR LIST, SEE DWG. S4-18.

UNOFFICIAL WEBSITE COPY

O:\20832887-XMI\CAD\Bridge\BR-S4\sb05_BR-S4_srf.dgn
2/10/2011
Steve_Lambert

DELAWARE
DEPARTMENT OF TRANSPORTATION

ADDENDUMS / REVISIONS	

SR1 / I-95 INTERCHANGE

CONTRACT	BRIDGE NO.	1-717A
28-090-03	DESIGNED BY: K. D. BEAVER	
COUNTY	CHECKED BY: J. S. LI	
NEW CASTLE		

RAMP C OVER SR 7

ABUTMENT A
REINFORCEMENT 2

S4-8	
SHEET NO.	356
TOTAL SHTS.	803

UNOFFICAL WEBSITE COPY

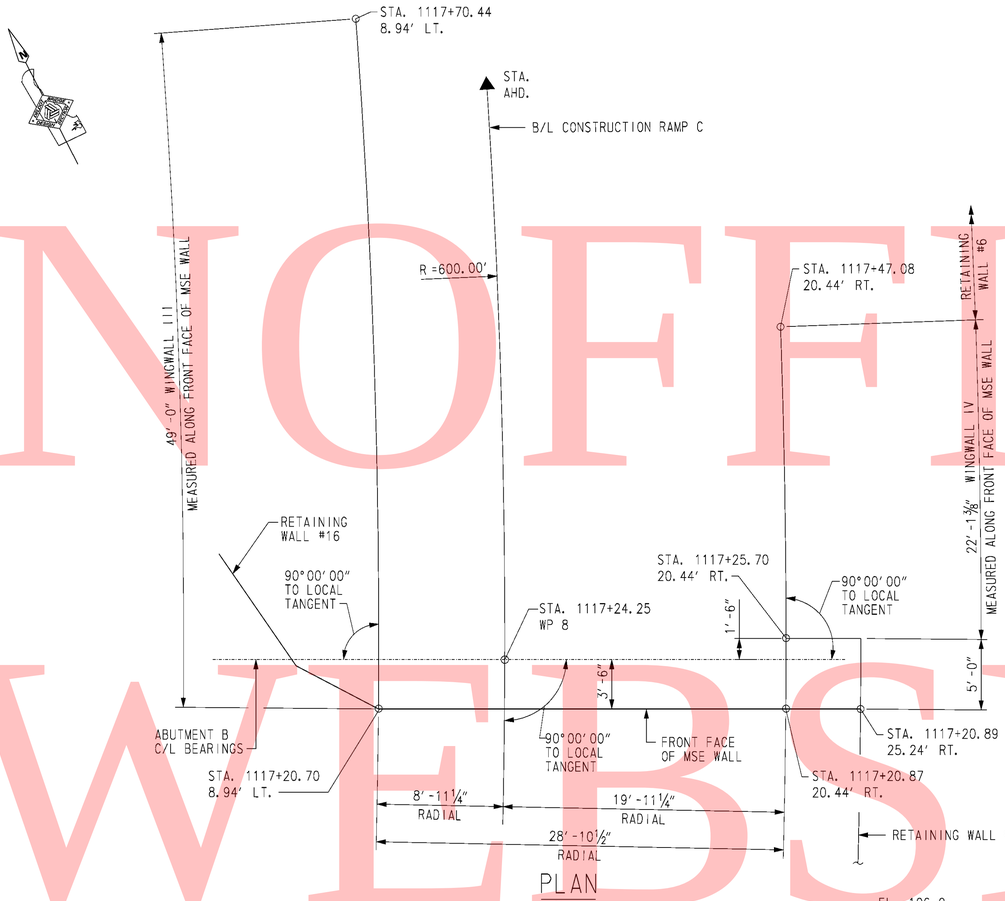

PLAN

SCALE: ⅜" = 1'-0"

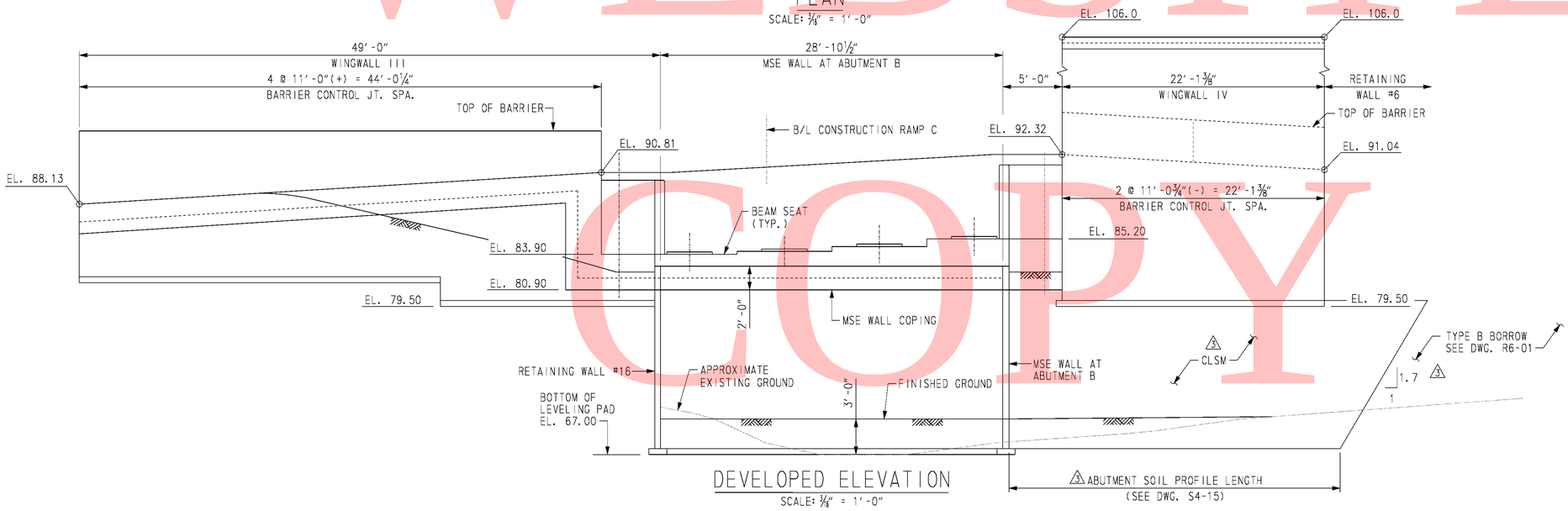

DEVELOPED ELEVATION

SCALE: ⅜" = 1'-0"

3 NOTES:

1. FILL REQUIRED BELOW WINGWALL IV SHALL BE INCIDENTAL TO ITEM 602772 - MECHANICALLY STABILIZED EARTH WALLS.

CROSS REFERENCE NOTES:

1. FOR BRIDGE PLAN AND ELEVATION, SEE DWG. S4-1.
2. FOR ABUTMENT B PLAN AND ELEVATION, SEE DWG. S4-6.
3. FOR MSE WINGWALL DETAILS, SEE DWG. S4-14 & S4-15.

O:\20832687-XMI\CAD\Bridge\BR-S4\rdl02_BR-S4_srf.dgn
2/28/2011
Steve_Lambert

DELAWARE DEPARTMENT OF TRANSPORTATION

ADDENDUMS / REVISIONS	
ADDENDUM NO. 3 ADDED NOTE & SOIL PROFILE, 02/18/11, RFK	

SR1 / I-95 INTERCHANGE

CONTRACT	BRIDGE NO.	1-717A
28-090-03	DESIGNED BY: R. F. KIRCHNER	
COUNTY	CHECKED BY: G. P. MISTRY	
NEW CASTLE		

RAMP C OVER SR 7

WINGWALLS III AND IV PLAN AND ELEVATION

S4-13	
SHEET NO.	361
TOTAL SHTS.	803

UNOFFICAL WEBSITE COPY

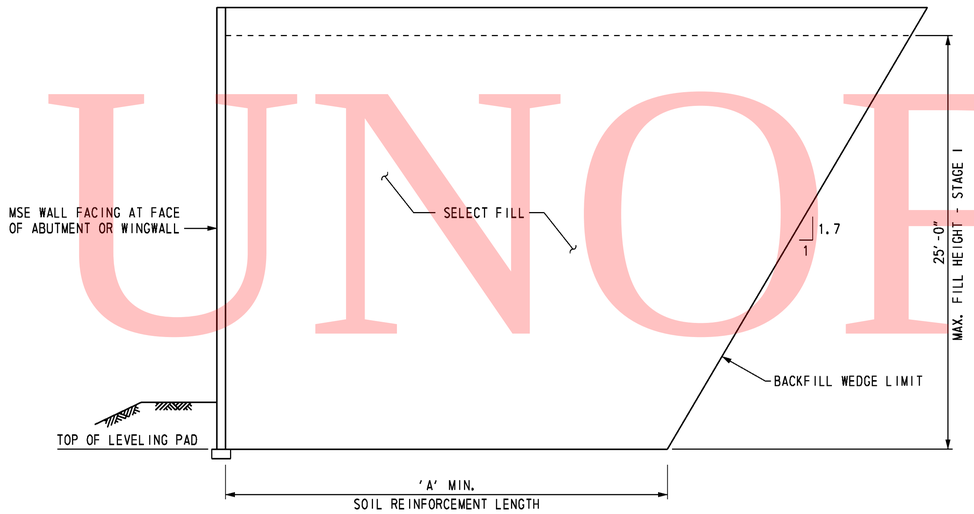

SOIL PROFILE SECTION
ABUTMENT A AND WINGWALLS I AND II

NOT TO SCALE

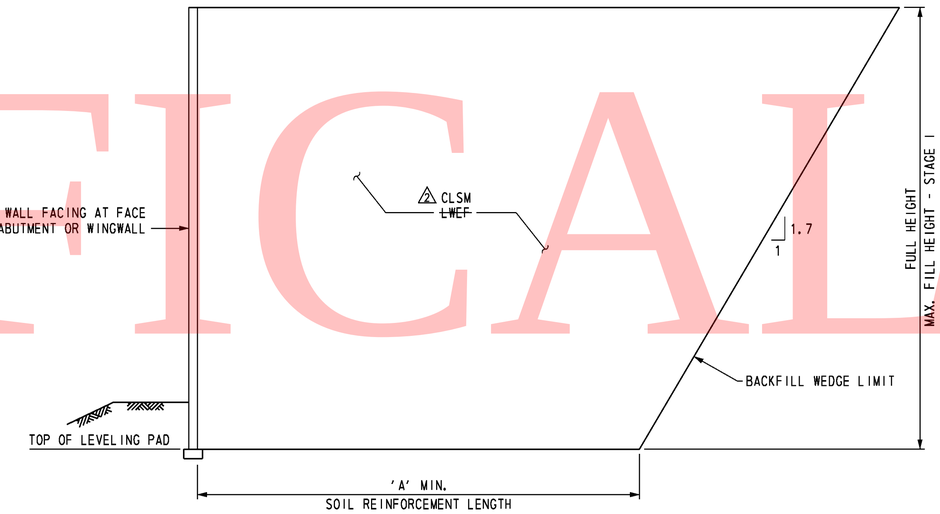

SOIL PROFILE SECTION
ABUTMENT B AND WINGWALLS III AND IV

NOT TO SCALE

MINIMUM REINFORCED ZONE WIDTH (A) FEET	
ABUTMENT A	
FACE OF ABUTMENT	24.0
3 WINGWALLS I ~~AND II~~	21.0
ABUTMENT B	
FACE OF ABUTMENT	24.5
3 ~~WINGWALLS III AND IV~~	~~24.5~~

SOIL PROPERTIES				
SOIL TYPE	UNIT WEIGHT (PCF)	DRAINED ANGLE OF FRICTION (DEGREES)	UNDRAINED SHEAR (PSF)	FACTORED BEARING RESISTANCE (KSF)
SELECT FILL	125	34	-	-
2 ~~LWEF~~	~~40~~	~~38~~	-	-
NO. 57 STONE	105	38	-	-
FOUNDATION SOIL:				
ABUTMENT A	120	24	1250	5.0
ABUTMENT B	120	24	1250	5.0
2 CONTROLLED LOW STRENGTH MATERIAL (CLSM)	40	38	-	-

FOUNDATION NOTES

THE FACTORED BEARING RESISTANCE SHALL BE VERIFIED PRIOR TO CONSTRUCTION OF THE MSE WALL.

THE INTERNAL STABILITY OF THE MSE WALL SHALL BE DESIGNED BY THE CONTRACTOR USING THE SOIL PARAMETERS PROVIDED FOR EACH STRUCTURE LOCATION. THE INTERNAL STABILITY CALCULATIONS SHALL BE SIGNED AND SEALED BY A PROFESSIONAL ENGINEER LICENSED IN THE STATE OF DELAWARE AS INDICATED IN THE PROJECT SPECIFICATIONS.

ISOLATED AREAS OF EXISTING FILL MAY BE ENCOUNTERED DURING CONSTRUCTION OF THIS MSE WALL. EXISTING FILL SHALL BE UNDERCUT TO EXPOSE UNDISTURBED NATURAL SOIL. UNDERCUTTING AND BACKFILLING WILL BE MEASURED AND PAID IN ACCORDANCE WITH THE SPECIFICATIONS.

A MINIMUM 7-DAY QUARANTINE PERIOD SHALL BE REQUIRED AFTER CONSTRUCTION OF THE WALL TO THE "MAX. FILL HEIGHT - STAGE 1" INDICATED ON THE SOIL PROFILE SECTION. NO FURTHER FILL SHALL BE PLACED UNTIL AUTHORIZED BY THE ENGINEER. ONCE AUTHORIZATION IS GIVEN, FILL SHALL BE PLACED IN ADDITIONAL INCREMENTS OF 5 FEET IN HEIGHT, WITH THE SAME QUARANTINE PERIOD AND AUTHORIZATION REQUIRED AT EACH INCREMENT. AN ADDITIONAL QUARANTINE PERIOD OF 2 ~~30 TO~~ 60 DAYS IS REQUIRED AFTER CONSTRUCTION OF THE MSE WALL TO ITS FULL HEIGHT. NO FURTHER CONSTRUCTION SHALL BE PERMITTED UNTIL AUTHORIZED BY THE ENGINEER. A TOTAL ESTIMATED SETTLEMENT OF APPROXIMATELY FOUR TO FIVE INCHES IS ANTICIPATED.

3 FOR WINGWALL II, SOIL REINFORCEMENT LENGTH RATIO SHALL BE L/H=1.2, AND LESS THAN (A)=21.0 FEET. FOR WINGWALLS III AND IV, SOIL REINFORCEMENT LENGTH RATIO SHALL BE L/H=1.2.

S4-15

DELAWARE
DEPARTMENT OF TRANSPORTATION

ADDENDUMS / REVISIONS	
ADDENDUM NO. 2 REVISED QUARANTINE PERIOD AND SOIL PROPERTIES, 01/26/11, RFK	
ADDENDUM NO. 3 REV. BACKFILL PROFILE, 02/18/11, RFK	

SR1 / I-95 INTERCHANGE

CONTRACT 28-090-03	BRIDGE NO.	1-717A
COUNTY NEW CASTLE	DESIGNED BY: R. F. KIRCHNER	
	CHECKED BY: G.P. MISTRY	

RAMP C OVER SR 7

WINGWALL DETAILS 2

SHEET NO.	363
TOTAL SHTS.	803

O:\20832687-XM\CAD\Bridge\BR-S4\rd04_BR-S4_srf.dgn
2/10/2011
Steve_Lambert

REINFORCING BAR LIST

ABUTMENT A

MARK	LENGTH	NO. BARS	TYPE	A	B	C	D	E	G	H	J	K	O	R	REMARKS
AP401E	6′-7″	76	T3									1′-8″	1′-7″		
AP801E	18′-11″	32	37	0′-11″	18′-0″						0′-8″				
AF501E	27′-6½″	6	STR.												
AF502E	29′-6½″	4	STR.												
AF503E	14′-9″	2	STR.												
AF504E	8′-0″	6	STR.												
AF505E	10′-9″	12	36	0′-10″	9′-11″										
AF506E	7′-5″	6	36	0′-10″	6′-7″										
AF507E	3′-7″	29	STR.												
AF508E	6′-6″	16	STR.												
AF509E	4′-5″	8	STR.												
AF510E	6′-0″	10	STR.												
AF511E	2′-2″	8	17		1′-1″	1′-1″									
AF601E	17′-4″	7	T2	1′-0″	5′-2″	2′-6″	5′-2″	2′-6″	1′-0″						
AF602E	17′-10″	8	T2	1′-0″	5′-2″	2′-9″	5′-2″	2′-9″	1′-0″						
AF603E	18′-8″	8	T2	1′-0″	5′-2″	3′-2″	5′-2″	3′-2″	1′-0″						
AF604E	20′-0″	7	T2	1′-0″	5′-2″	3′-10″	5′-2″	3′-10″	1′-0″						
AF605E	4′-3″	27	STR.												
AF606E	6′-1″	2	STR.												
A501E	6′-9″	29	STR.												
A502E	7′-1	27	17		3′-0″	1′-0″	3′-1″								
A503E	3′-9″	27	16		1′-6″	0′-10″	1′-5″								
A504E	29′-7″	18	STR.												
A505E	6′-0″	14	STR.												
A506E	4′-6″	14	STR.												
A507E	2′-2″	8	17		1′-1″	1′-1″									
A508E	3′-3″	16	36	1′-0″	2′-3″										
A509E	5′-7″	16	STR.												
A510E	7′-11″	8	STR.												
A511E	3′-10″	8	STR.												
A512E	4′-8″	8	16			3′-5″	1′-3″			1′-0¼″		0′-8¾″			
A601E	4′-3″	29	STR.												
B501E	6′-9″	8	H1		2′-9½″	1′-2″	2′-9½″			0′-5″			0′-4½″		
B502E	2′-0″	4	STR.												
B701E	2′-0″	8	STR.												
B801E	2′-0″	8	STR.												
3 CP401	2′-9½″	34	17		1′-8″	0′-5½″	0′-8″								
3 CP402	29′-6″	4	STR.												
3 CP403	1′-5″	4	STR.												
3 CP404	2′-5″	4	17		1′-0″	1′-5″									

ABUTMENT B

MARK	LENGTH	NO. BARS	TYPE	A	B	C	D	E	G	H	J	K	O	R	REMARKS
AP431E	6′-7″	76	T3									1′-8″	1′-7″		
AP831E	18′-11″	32	37	0′-11″	18′-0″						0′-8″				
AF531E	27′-6½″	6	STR.												
AF532E	29′-6½″	4	STR.												
AF533E	14′-9½″	2	STR.												
AF534E	8′-0″	6	STR.												
AF535E	10′-9″	12	36	0′-10″	9′-11″										
AF536E	7′-5″	6	36	0′-10″	6′-7″										
AF537E	3′-7″	29	STR.												
AF538E	6′-6″	15	STR.												
AF539E	4′-5″	8	STR.												
AF540E	6′-0″	4	STR.												
AF541E	2′-2″	8	17		1′-1″	1′-1″									
AF542E	5′-6″	5	STR.												
AF631E	17′-4″	7	T2	1′-0″	5′-2″	2′-6″	5′-2″	2′-6″	1′-0″						
AF632E	17′-10″	8	T2	1′-0″	5′-2″	2′-9″	5′-2″	2′-9″	1′-0″						
AF633E	18′-8″	8	T2	1′-0″	5′-2″	3′-2″	5′-2″	3′-2″	1′-0″						
AF634E	20′-0″	7	T2	1′-0″	5′-2″	3′-10″	5′-2″	3′-10″	1′-0″						
AF635E	4′-3″	27	STR.												
AF636E	6′-1″	2	STR.												
A531E	6′-9″	29	STR.												
A532E	7′-1	27	17		3′-0″	1′-0″	3′-1″								
A533E	3′-9″	27	16		1′-6″	0′-10″	1′-5″								
A534E	29′-7″	18	STR.												
A535E	6′-0″	7	STR.												
A536E	4′-6″	14	STR.												
A537E	2′-2″	8	17		1′-1″	1′-1″									
A538E	3′-9″	4	36	1′-0″	2′-9″										
A539E	5′-8″	8	STR.												
A540E	8′-1″	7	STR.												
A541E	3′-10″	7	STR.												
A542E	4′-8″	7	16			3′-5″	1′-3″			1′-0¼″		0′-8¾″			
A543E	5′-3″	7	STR.												
A544E	3′-3″	4	36	1′-0″	2′-3″										
A631E	5′-3″	29	STR.												
B531E	6′-9″	7	H1		2′-9½″	1′-2″	2′-9½″			0′-5″				0′-4½″	
B532E	2′-0″	4	STR.												
B731E	2′-0″	8	STR.												
B831E	2′-0″	8	STR.												
3 CP401	2′-9½″	34	17		1′-8″	0′-5½″	0′-8″								
3 CP402	29′-6″	4	STR.												
3 CP403	1′-5″	4	STR.												
3 CP404	2′-5″	4	17		1′-0″	1′-5″									

BENDING DIAGRAMS

ALL DIMENSIONS ARE FROM OUT TO OUT.

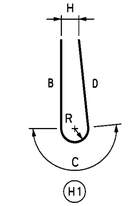

H1

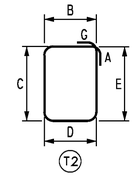

T2

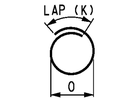

T3

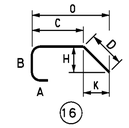

16

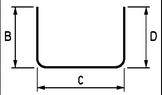

17

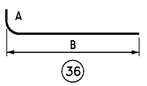

36

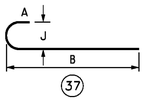

37

UNOFFICIAL WEBSITE COPY

O:\20832887-XM\CAD\Bridge\BR-S4\sb09_BR-S4_srf.dgn
2/10/2011
Steve_Lambert

S4-18

DELAWARE DEPARTMENT OF TRANSPORTATION

ADDENDUMS / REVISIONS

ADDENDUM NO.	
3	ADDED COPING REINF., 02/18/11, RFK

SR1 / I-95 INTERCHANGE

CONTRACT	BRIDGE NO.	1-717A
28-090-03	DESIGNED BY: K. D. BEAVER	
COUNTY	CHECKED BY: J. S. LI	
NEW CASTLE		

RAMP C OVER SR 7

ABUTMENTS A AND B REINFORCING BAR LIST

SHEET NO.
366
TOTAL SHTS.
803

GENERAL NOTES

1. DESIGN SPECIFICATIONS
AASHTO LRFD BRIDGE DESIGN SPECIFICATIONS, 4th EDITION WITH 2009 INTERIM REVISIONS.
DELAWARE DEPARTMENT OF TRANSPORTATION BRIDGE DESIGN MANUAL, MAY 2005 INCLUDING LATEST REVISIONS. ANSI/AASHTO/AWS D1.5 BRIDGE WELDING CODE.

2. LOADING
UNIT WEIGHTS OF MATERIALS SHALL BE IN ACCORDANCE WITH THE DELAWARE DESIGN MANUAL.
FUTURE OVERLAY ALLOWANCE SHALL BE 25 LBS/SQ FT.
STEEL BRIDGE DECK FORMS WHICH STAY IN PLACE (INCLUDING CONCRETE IN FORM CORRUGATIONS) SHALL BE 15 LBS/SQ FT.
VEHICLE LIVE LOAD SHALL BE HL-93, WHICH CONSISTS OF A DESIGN TRUCK OR TANDEM WITH DYNAMIC LOAD ALLOWANCE AND A LANE LOAD. RATING SHALL USE ALL DELAWARE LEGAL LOADS SPECIFIED IN THE BRIDGE DESIGN MANUAL.
BARRIER HAS BEEN DESIGNED FOR TEST LEVEL FIVE (TL-5).
FATIGUE DESIGN SHALL BE BASED ON THE FOLLOWING ONE DIRECTIONAL TRAFFIC VOLUMES:

RAMP G1 OVER SR7: DESIGN ADT = 5,850, DESIGN ADTT = 175

FOR THERMAL LOADS, CONSIDER THE MODERATE TEMPERATURE RANGE AS STIPULATED IN THE AASHTO LRFD DESIGN SPECIFICATIONS. THE NORMAL TEMPERATURE SHALL BE CONSIDERED TO BE 60F.
FOR SEISMIC LOADS, CONSIDER SEISMIC PERFORMANCE ZONE 1, WITH A SITE CLASS = E AND IMPORTANCE CATEGORY - CRITICAL.

△3 3. PORTLAND CEMENT CONCRETE
PORTLAND CEMENT CONCRETE FOR CAST-IN-PLACE ELEMENTS SHALL BE AS FOLLOWS:
(28 DAY COMPRESSIVE STRENGTH)
~~ITEM NO. 602007 (CLASS A, F'c=4500 PSI) - PIER ABOVE FOOTING~~
~~ITEM NO. 602011 (CLASS A, F'c=4500 PSI) - PIER FOOTING, TOP OF PIER PILES~~
~~ITEM NO. 602013 (CLASS D, F'c=4500 PSI) - DECK~~
~~ITEM NO. 602014 (CLASS D, F'c=4500 PSI) - APPROACH SLAB~~
~~ITEM NO. 602015 (CLASS A, F'c=4500 PSI) - ABUTMENT, TOP OF ABUTMENT PILES~~
~~ITEM NO. 602017 (CLASS A, F'c=4500 PSI) - BARRIER~~

602007 - PORTLAND CEMENT CONCRETE MASONRY, PIER ABOVE FOOTING, CLASS A (fc' = 4,500 PSI, PIER ABOVE FOOTING)
602011 - PORTLAND CEMENT CONCRETE MASONRY, PIER FOOTING, CLASS A (fc' = 4,500 PSI, PIER FOOTING, TOP OF PIER PILES)
602013 - PORTLAND CEMENT CONCRETE MASONRY, SUPERSTRUCTURE, CLASS D (fc' = 4,500 PSI, DECK)
602014 - PORTLAND CEMENT CONCRETE MASONRY, APPROACH SLAB, CLASS D (fc' = 4,500 PSI, APPROACH SLAB)
602015 - PORTLAND CEMENT CONCRETE MASONRY, ABUTMENT ABOVE FOOTING, CLASS A (fc' = 4,500 PSI, ABUTMENT, TOP OF ABUTMENT PILES)
602017 - PORTLAND CEMENT CONCRETE MASONRY, PARAPET, CLASS A (fc' = 4,500 PSI, BARRIER)

MIX REQUIREMENTS SHALL CONFORM TO SECTION 812 OF THE DELAWARE DEPARTMENT OF TRANSPORTATION STANDARD SPECIFICATIONS. ALL EXPOSED CORNERS OF CONCRETE SHALL BE CHAMFERED WITH ¾" X ¾" MILLED CHAMFER STRIPS UNLESS NOTED OTHERWISE, EXCEPT ON UNEXPOSED FOOTINGS OR WHERE INDICATED BY THE NOTATION ON THE PLANS, "DO NOT CHAMFER". NO SLIP-FORMING OF BARRIERS IS PERMITTED, UNLESS OTHERWISE APPROVED.

4. BAR REINFORCEMENT
REINFORCING STEEL SHALL CONFORM TO AASHTO M31 (ASTM A615), GRADE 60. ALL REINFORCING STEEL SHALL HAVE A CLEAR COVER OF 2" UNLESS OTHERWISE SPECIFIED ON THE PLANS. FUSION-BONDED EPOXY COATED REINFORCING STEEL SHALL CONFORM TO AASHTO M284 (ASTM D3963), AND SHALL BE DENOTED WITH A SUFFIX "E" IN THE BAR MARKS.

DO NOT WELD GRADE 60 REINFORCING STEEL.

5. STRUCTURAL STEEL
STRUCTURAL STEEL SHALL CONFORM TO ASTM A 709, GRADE 50W, INCLUDING THE ADDITIONAL REQUIREMENTS FOR CHARPY V-NOTCH TESTING OF AASHTO M270 FOR PRIMARY LOAD CARRYING MEMBERS UNDER TENSILE STRESS. THE PRIMARY LOAD CARRYING MEMBER COMPONENTS ARE THE FLANGES, WEBS, AND SPLICE PLATES OF THE STEEL GIRDERS. THE USE OF FRACTURE CRITICAL MEMBERS IS PROHIBITED. FATIGUE CATEGORIES D, E AND F SHALL NOT BE USED IN STRESS REVERSAL OR TENSION AREAS, EXCEPT FOR TEMPORARY CONDITIONS.

EIGHT (8) FEET AT THE ENDS OF EACH GIRDER AND THE END CROSS FRAMES SHALL BE PAINTED WITH A URETHANE PAINT SYSTEM IN ACCORDANCE WITH SPECIAL PROVISION #605537-URETHANE PAINT SYSTEM. THE FINAL COLOR SHALL BE FEDERAL #10076 (BROWN) OF FED-STD-595B. COST OF PAINTING SHALL BE INCIDENTAL TO ITEM 605002, STEEL STRUCTURES.

ALL BOLTS FOR SPLICE PLATES AND CROSS FRAMES SHALL BE ⅞" DIA. IN 1⅛" DIA. HOLES AND CONFORM TO ASTM A325, TYPE 3, WITH THREADS EXCLUDED FROM SHEAR PLANES. BOLTED CONNECTIONS SHALL BE CLASS B SLIP CRITICAL CONNECTIONS, UNLESS NOTED ON THE PLANS.

7. SERVICEABILITY
LIVE LOAD DEFLECTION SHALL BE LIMITED TO L/800.
FOR REINFORCEMENT DISTRIBUTION REQUIREMENTS, CONSIDER CLASS 2 EXPOSURE CRITERIA FOR DECKS. ACCOMMODATION TO JACK GIRDERS FOR FUTURE BEARING REPLACEMENT HAS BEEN CONSIDERED IN THE DESIGN.

8. CONSTRUCTION JOINTS
KEYED CONSTRUCTION JOINTS SHALL BE 2" X 4" OR AS NOTED. ALL EXPOSED CONSTRUCTION JOINT EDGES SHALL HAVE A ¾" V-NOTCH, UNLESS OTHERWISE NOTED.

△3 9. ~~STABILIZING STRUCTURAL EXCAVATIONS~~
~~SHEETING AND SHORING SHALL BE REQUIRED FOR ANY EXCAVATION EXCEEDING FIVE (5) FEET IN HEIGHT, THE COST SHALL BE PAID UNDER ITEM NO. 207501 - IN LIEU OF SHORING, THE CONTRACTOR MAY USE A 2:1 CUT SLOPE. NO PAYMENT SHALL BE MADE FOR ADDITIONAL EXCAVATION OR FILL OUTSIDE THE LIMITS AS DEFINED IN SECTION 207 OF THE STANDARD SPECIFICATIONS.~~

10. EXCAVATION REQUIRED TO ATTAIN THE GRADE FOR INSTALLATION OF MSE WALLS SHALL BE INCIDENTAL TO ITEM NO. 602772 - MECHANICALLY STABILIZED EARTH WALLS.

11. STRUCTURAL BACKFILL SHALL CONFORM TO THE REQUIREMENTS OF BORROW TYPE C. MSE WALL BACKFILL SHALL BE AS SPECIFIED ON THE PLANS.

12. ROADWAY CLEARANCES
A MINIMUM OF 16'-6" VERTICAL CLEARANCE SHALL BE MAINTAINED ABOVE ALL ROADWAYS.
A MINIMUM OF 2'-0" HORIZONTAL CLEARANCE SHALL BE MAINTAINED FROM THE OUTSIDE EDGE OF SHOULDER OFFSET (FACE OF CURB) TO THE FACE OF ANY OBSTRUCTION. THESE CLEARANCES APPLY AT ALL TIMES INCLUDING DURING CONSTRUCTION.

BRIDGE LEGAL LOAD RATING (TONS)
RAMP G1 OVER SR 7

TRUCK TYPE	RATING FACTOR	SAFE LOAD CAPACITY
HS-20	1.84	66.2
S220	2.93	58.6
S327	2.61	70.4
S335	2.00	70.0
S437	2.12	77.3
T330	2.51	75.3
T435	2.12	74.2
T540	2.09	83.6

BRIDGE DESIGN LOAD RATING:
INVENTORY = 1.21
OPERATING = 1.57

13. TEST PILES
PILE LENGTHS FOR ORDERING PURPOSES SHALL BE DETERMINED BY TEST PILES. A MINIMUM OF ONE (1) PILE PER SUBSTRUCTURE, AS SHOWN ON THE PLANS, SHALL BE DYNAMICALLY TESTED BY THE CONTRACTOR IN ACCORDANCE WITH SPECIAL PROVISION 619519. TEST AND PRODUCTION PILE RE-STRIKES WILL BE PAID AS FOLLOWS:

A). ALL TEST PILE(S) WILL BE RESTRUCK AND DYNAMICALLY TESTED BY THE CONTRACTOR. THE TEST PILE RESTRIKES SHALL BE INCIDENTAL TO ITEM NO. 619519 DYNAMIC PILE TESTING BY CONTRACTOR PROVIDED THAT THEY ARE PERFORMED WITHIN FIVE (5) CALENDAR DAYS FROM INITIAL DRIVE.

B). AN ADDITIONAL PAYMENT WILL BE MADE TO THE CONTRACTOR IF HE IS DIRECTED BY THE ENGINEER TO WAIT AND RESTRIKE THE TEST PILE MORE THAN FIVE (5) CALENDAR DAYS AFTER INITIAL DRIVE. THE CONTRACTOR SHALL BE COMPENSATED AT THE FIXED PRICE OF $1,000.00 PER CALENDAR DAY FOR EVERY DAY, AFTER THE FIFTH CALENDAR DAY, UNDER ITEM NO. 619502 TEST PILE RESTRIKE. MULTIPLE TEST PILE RESTRIKES OCCURRING ON THE SAME DAY WILL ONLY BE PAID FOR AS ONE CALENDAR DAY. NO ADDITIONAL COMPENSATION WILL BE MADE REGARDLESS OF THE NUMBER OF TEST PILE RESTRIKES PERFORMED THAT DAY.

C). RESTRIKES ON PRODUCTION PILES WHICH ARE DESIGNATED TO BE DYNAMICALLY TESTED WILL NOT BE PAID UNDER ITEM NO. 619501 PRODUCTION PILE RESTRIKE. THESE PRODUCTION PILE RESTRIKES ARE INCIDENTAL TO ITEM NO. 619519 DYNAMIC PILE TESTING BY CONTRACTOR.

THE DEPARTMENT RESERVES THE RIGHT TO PERFORM DYNAMIC TESTING OF RESTRIKES.

NOTE:

LOAD RATING IS IN ACCORDANCE WITH THE LOAD AND RESISTANCE FACTOR RATING (LRFR) METHOD.

CROSS REFERENCE NOTE:

FOR MSE WALL NOTES, SEE DWG S5-14.

UNOFFICIAL WEBSITE COPY

O:\20832687-XM\CAD\Bridge\BR-SS\gen01_BR-SS_srf.dgn
2/24/2011
Steve_Lambert

DELAWARE
DEPARTMENT OF TRANSPORTATION

ADDENDUMS / REVISIONS
ADDENDUM NO. △3 REV. NOTE 3, DELETED 9, 02/18/11, SAM

SR1 / I-95 INTERCHANGE

CONTRACT 28-090-03
COUNTY NEW CASTLE
BRIDGE NO. 1-716D
DESIGNED BY: R. F. KIRCHNER
CHECKED BY: J. S. LI

RAMP G1 OVER SR 7
GENERAL NOTES

S5-2
SHEET NO. 395
TOTAL SHTS. 803

UNOFFICIAL WEBSITE COPY

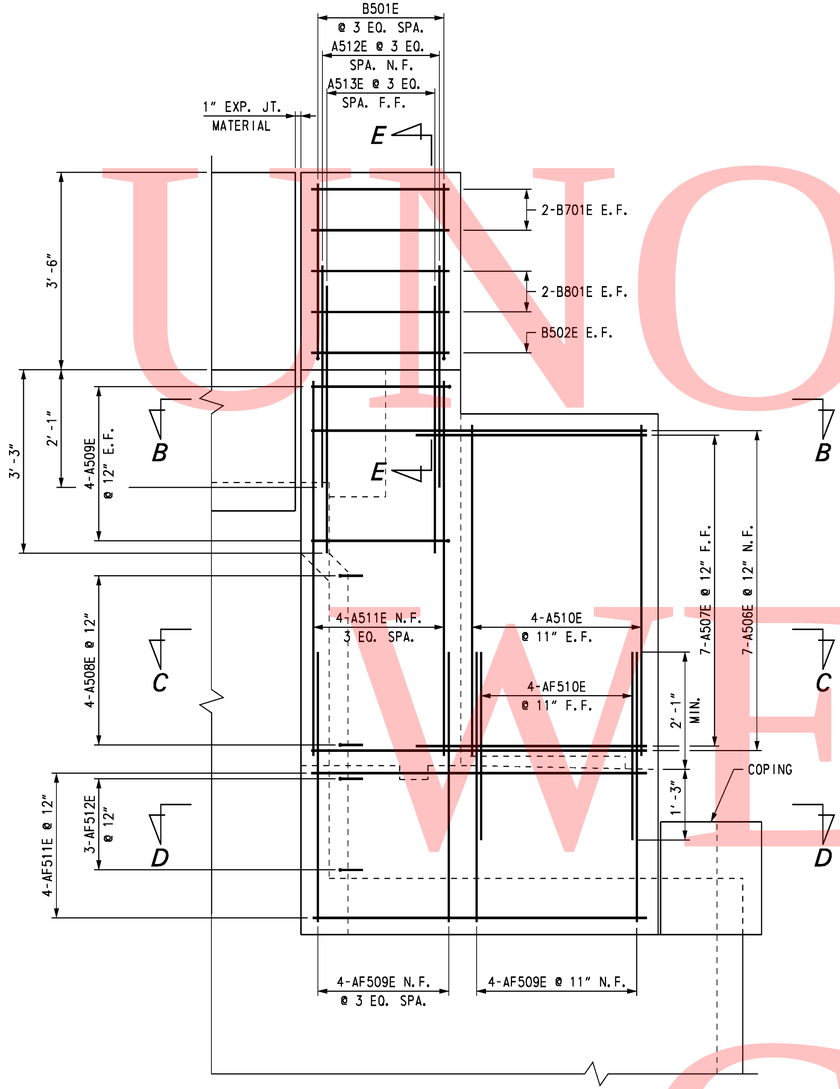

WINGWALL 11 SIDE ELEVATION

SCALE: ¾" = 1'-0"

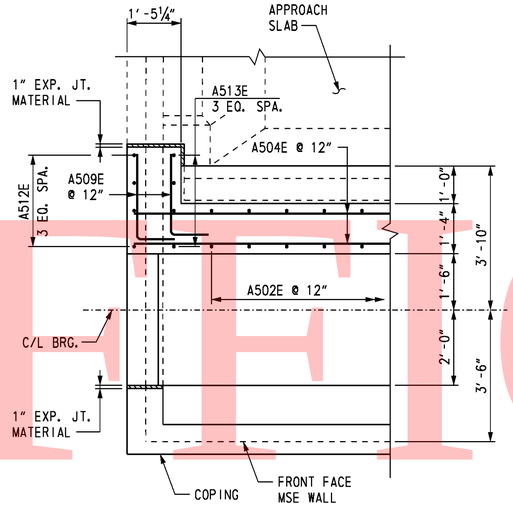

SECTION B-B

SCALE: ½" = 1'-0"

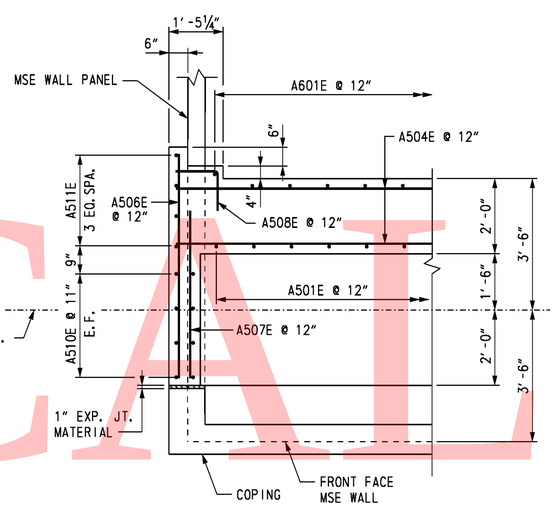

SECTION C-C

SCALE: ½" = 1'-0"

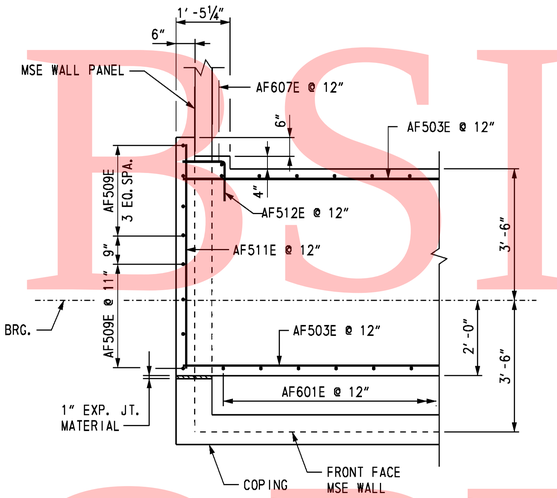

SECTION D-D

SCALE: ½" = 1'-0"

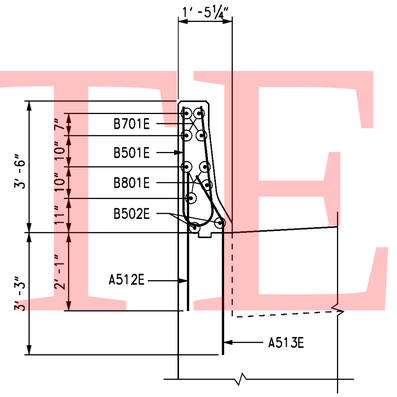

SECTION E-E

SCALE: ½" = 1'-0"

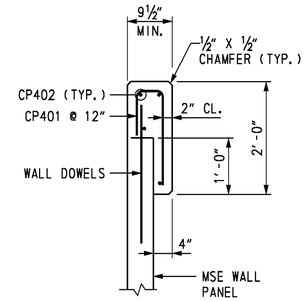

⚠3 COPING DETAIL

SCALE: ¾" = 1'-0"

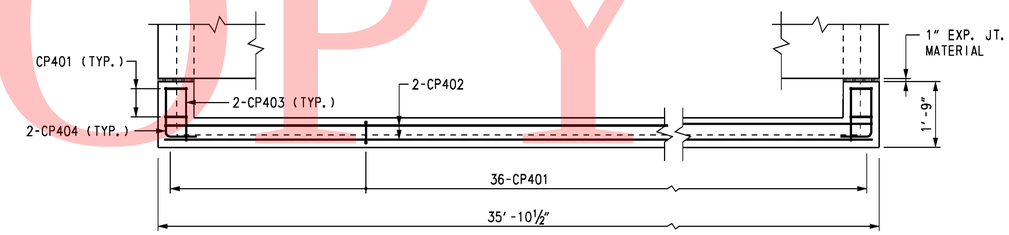

⚠3 ABUTMENT MSE WALL COPING PLAN

SCALE: ½" = 1'-0"

CROSS REFERENCE NOTES:

1. FOR ABUTMENT A PLAN AND ELEVATION, SEE DWG. S5-5.
2. FOR ABUTMENT A ELEVATION REINFORCEMENT DETAILS, SEE DWG. S5-7.
3. FOR REINFORCING BAR LIST, SEE DWG. S5-16.

S5-8

DELAWARE DEPARTMENT OF TRANSPORTATION

ADDENDUMS / REVISIONS	
ADDENDUM NO. ⚠3 ADDED COPING REINF., 02/18/11, RFK	

SR1 / I-95 INTERCHANGE

CONTRACT	BRIDGE NO.	1-716D	SHEET NO.
28-090-03			401
COUNTY	DESIGNED BY: K. D. BEAVER		TOTAL SHTS.
NEW CASTLE	CHECKED BY: J. S. LI		803

RAMP G1 OVER SR 7

ABUTMENT A REINFORCEMENT 2

O:\20832687-XM\CAD\Bridge\BR-SS\sb05_BR-SS_srf.dgn
2/10/2011
Steve_Lambert

UNOFFICAL WEBSITE COPY

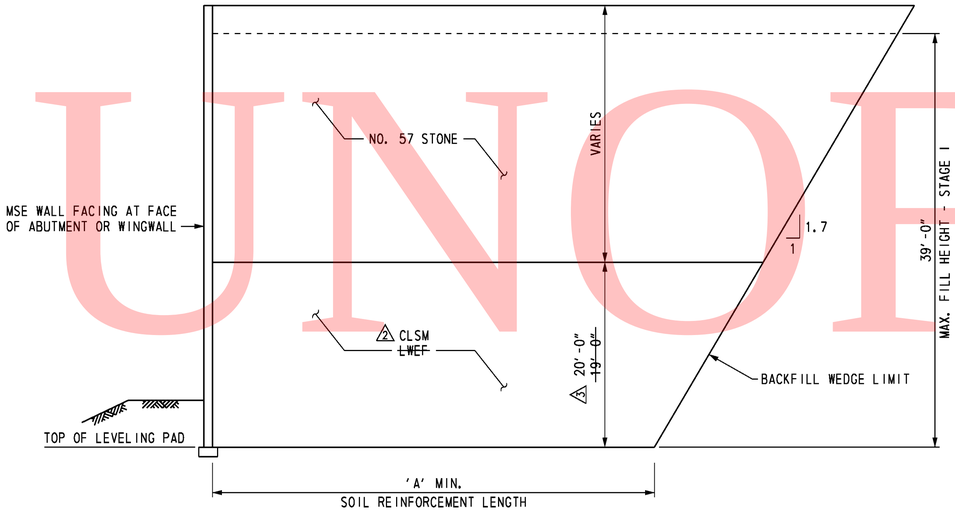

SOIL PROFILE SECTION
ABUTMENT A AND WINGWALLS I AND II

NOT TO SCALE

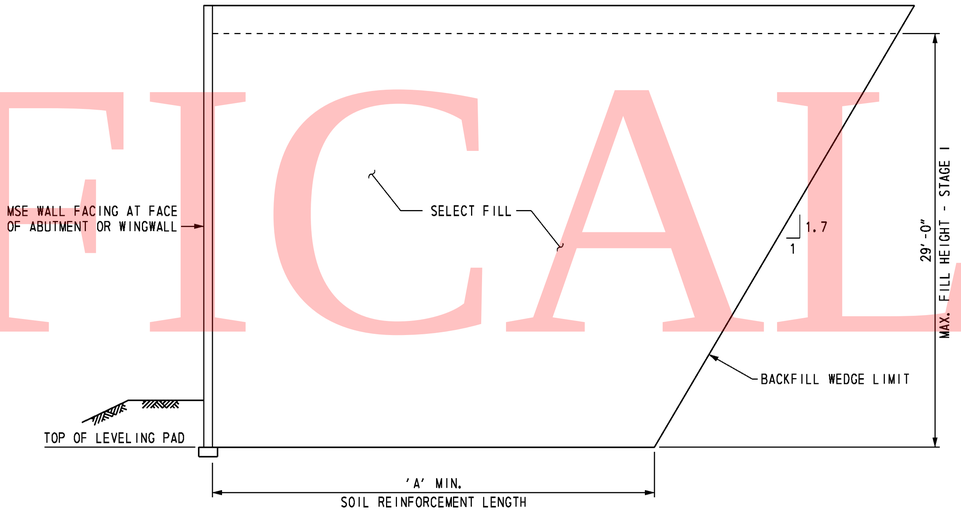

SOIL PROFILE SECTION
ABUTMENT B AND WINGWALLS III AND IV

NOT TO SCALE

MINIMUM REINFORCED ZONE WIDTH (A) FEET	
ABUTMENT A	
FACE OF ABUTMENT	33.0
3 WINGWALLS ~~I AND~~ II	33.0
ABUTMENT B	
FACE OF ABUTMENT	27.0
3 WINGWALLS ~~III AND~~ IV	32.0

SOIL PROPERTIES				
SOIL TYPE	UNIT WEIGHT (PCF)	DRAINED ANGLE OF FRICTION (DEGREES)	UNDRAINED SHEAR (PSF)	FACTORED BEARING RESISTANCE (KSF)
SELECT FILL	125	34	-	-
2 ~~LWEF~~	~~40~~	~~38~~	-	-
NO. 57 STONE	105	38	-	-
FOUNDATION SOIL:				
ABUTMENT A	120	24	1250	5.3
ABUTMENT B	120	24	1400	6.0
2 CONTROLLED LOW STRENGTH MATERIAL (CLSM)	40	38	-	-

FOUNDATION NOTES

THE FACTORED BEARING RESISTANCE SHALL BE VERIFIED PRIOR TO CONSTRUCTION OF THE MSE WALL.

THE INTERNAL STABILITY OF THE MSE WALL SHALL BE DESIGNED BY THE CONTRACTOR USING THE SOIL PARAMETERS PROVIDED FOR EACH STRUCTURE LOCATION. THE INTERNAL STABILITY CALCULATIONS SHALL BE SIGNED AND SEALED BY A PROFESSIONAL ENGINEER LICENSED IN THE STATE OF DELAWARE AS INDICATED IN THE PROJECT SPECIFICATIONS.

ISOLATED AREAS OF EXISTING FILL MAY BE ENCOUNTERED DURING CONSTRUCTION OF THIS MSE WALL. EXISTING FILL SHALL BE UNDERCUT TO EXPOSE UNDISTURBED NATURAL SOIL. UNDERCUTTING AND BACKFILLING WILL BE MEASURED AND PAID IN ACCORDANCE WITH THE SPECIFICATIONS.

A MINIMUM 7-DAY QUARANTINE PERIOD SHALL BE REQUIRED AFTER CONSTRUCTION OF THE WALL TO THE "MAX. FILL HEIGHT - STAGE 1" INDICATED ON THE SOIL PROFILE SECTION. NO FURTHER FILL SHALL BE PLACED UNTIL AUTHORIZED BY THE ENGINEER. ONCE AUTHORIZATION IS GIVEN, FILL SHALL BE PLACED IN ADDITIONAL INCREMENTS OF 5 FEET IN HEIGHT, WITH THE SAME QUARANTINE PERIOD AND AUTHORIZATION REQUIRED AT EACH INCREMENT. AN ADDITIONAL QUARANTINE PERIOD OF
2 ~~30 TO~~ 60 DAYS IS REQUIRED AFTER CONSTRUCTION OF THE MSE WALL TO ITS FULL HEIGHT. NO FURTHER CONSTRUCTION SHALL BE PERMITTED UNTIL AUTHORIZED BY THE ENGINEER. A TOTAL ESTIMATED SETTLEMENT OF APPROXIMATELY FOUR TO FIVE INCHES IS ANTICIPATED.

3 FOR WINGWALLS I AND III, SOIL REINFORCEMENT LENGTH RATIO SHALL BE L/H=1.2. NO. 57 STONE BACKFILL APPLIES ABOVE ELEVATION 86.0.

S5-15

DELAWARE DEPARTMENT OF TRANSPORTATION

ADDENDUMS / REVISIONS

ADDENDUM NO. 2 REVISED QUARANTINE PERIOD AND SOIL PROPERTIES, 01/26/11, RFK	
ADDENDUM NO. 3 REV. BACKFILL PROFILE, 02/18/11, RFK	

SR1 / I-95 INTERCHANGE

CONTRACT 28-090-03	BRIDGE NO. 1-716D	RAMP G1 OVER SR 7
COUNTY NEW CASTLE	DESIGNED BY: R. F. KIRCHNER	WINGWALL DETAILS 2
	CHECKED BY: G.P. MISTRY	

SHEET NO.	408
TOTAL SHTS.	803

O:\20832687-XM\CAD\Bridge\BR-S5\rd04_BR-S5_srf.dgn
2/10/2011
Steve_Lambert

REINFORCING BAR LIST

ABUTMENT A

MARK	LENGTH	NO. BARS	TYPE	A	B	C	D	E	G	H	J	K	O	R	REMARKS
AP401E	6′-7″	76	T3									1′-8″	1′-7″		
AP801E	18′-11″	32	37	0′-11″	18′-0″						0′-8″				
AF501E	18′-0″	6	STR.												
AF502E	17′-7″	6	STR.												
AF503E	19′-0″	4	STR.												
AF504E	18′-7″	6	STR.												
AF505E	19′-0″	6	STR.												
AF506E	11′-7″	6	36	0′-10″	10′-9″										
AF507E	8′-9″	6	36	0′-10″	7′-11″										
AF508E	3′-7″	35	STR.												
AF509E	6′-1″	15	STR.												
AF510E	4′-5″	8	STR.												
AF511E	6′-0″	4	STR.												
AF512E	2′-2″	7	17		1′-1″	1′-1″									
AF513E	5′-6″	5	STR.												
AF601E	17′-4″	18	T2	1′-0″	5′-2″	2′-6″	5′-2″	2′-6″	1′-0″						
AF602E	18′-2″	10	T2	1′-0″	5′-2″	2′-11″	5′-2″	2′-11″	1′-0″						
AF603E	19′-2″	8	T2	1′-0″	5′-2″	3′-5″	5′-2″	3′-5″	1′-0″						
AF604E	4′-3″	33	STR.												
AF605E	5′-9″	2	STR.												
A501E	6′-10″	35	STR.												
A502E	7′-1	33	17		3′-0″	1′-0″	3′-1″								
A503E	3′-9″	33	16		1′-6″	0′-10″	1′-5″			1′-0″		1′-0″			
A504E	19′-0″	18	STR.												
A505E	18′-7″	18	STR.												
A506E	6′-0″	7	STR.												
A507E	4′-6″	14	STR.												
A508E	2′-2″	8	17		1′-1″	1′-1″									
A509E	3′-9″	8	36	1′-0″	2′-9″										
A510E	5′-8″	16	STR.												
A511E	7′-11″	7	STR.												
A512E	3′-10″	7	STR.												
A513E	4′-8″	7	16			3′-5″	1′-3″			1′-0¼″		0′-8¾″			
A514E	5′-3″	7	STR.												
A515E	3′-3″	8	36	1′-0″	2′-3″										
A601E	4′-4″	35	STR.												
B501E	6′-9″	7	H1		2′-9½″	1′-2″	2′-9½″			0′-5″				0′-4½″	
B502E	2′-0″	4	STR.												
B701E	2′-0″	8	STR.												
B801E	2′-0″	8	STR.												
3 CP401	2′-9½″	40	17		1′-8″	0′-5½″	0′-8″								
3 CP402	35′-6″	4	STR.												
3 CP403	1′-5″	4	STR.												
3 CP404	2′-5″	4	17		1′-0″	1′-5″									

ABUTMENT B

MARK	LENGTH	NO. BARS	TYPE	A	B	C	D	E	G	H	J	K	O	R	REMARKS
AP431E	6′-7″	76	T3									1′-8″	1′-7″		
AP831E	18′-11″	32	37	0′-11″	18′-0″						0′-8″				
AF531E	18′-0″	6	STR.												
AF532E	17′-7″	6	STR.												
AF533E	19′-0″	4	STR.												
AF534E	18′-7″	6	STR.												
AF535E	11′-10″	2	STR.												
AF536E	9′-2″	8	STR.												
AF537E	11′-7″	12	36	0′-10″	10′-9″										
AF538E	8′-9″	6	36	0′-10″	7′-11″										
AF539E	3′-7″	35	STR.												
AF540E	6′-11″	16	STR.												
AF541E	4′-5″	8	STR.												
AF542E	6′-0″	12	STR.												
AF543E	2′-2″	10	17		1′-1″	1′-1″									
AF631E	17′-4″	8	T2	1′-0″	5′-2″	2′-6″	5′-2″	2′-6″	1′-0″						
AF632E	18′-2″	10	T2	1′-0″	5′-2″	2′-11″	5′-2″	2′-11″	1′-0″						
AF633E	19′-2″	10	T2	1′-0″	5′-2″	3′-5″	5′-2″	3′-5″	1′-0″						
AF634E	20′-10″	8	T2	1′-0″	5′-2″	4′-3″	5′-2″	4′-3″	1′-0″						
AF635E	4′-3″	33	STR.												
AF636E	6′-6″	2	STR.												
A531E	6′-9″	35	STR.												
A532E	7′-1	33	17		3′-0″	1′-0″	3′-1″								
A533E	3′-9″	33	16		1′-6″	0′-10″	1′-5″				1′-0″		1′-0″		
A534E	19′-1″	18	STR.												
A535E	18′-8″	18	STR.												
A536E	6′-0″	14	STR.												
A537E	4′-6″	14	STR.												
A538E	2′-2″	8	17		1′-1″	1′-1″									
A539E	3′-9″	16	36	1′-0″	2′-9″										
A540E	5′-7″	16	STR.												
A541E	7′-10″	8	STR.												
A542E	3′-10″	8	STR.												
A543E	4′-8″	8	16			3′-5″	1′-3″			1′-0¼″		0′-8¾″			
A631E	4′-4″	35	STR.												
B531E	6′-9″	8	H1		2′-9½″	1′-2″	2′-9½″			0′-5″				0′-4½″	
B532E	2′-0″	4	STR.												
B731E	2′-0″	8	STR.												
B831E	2′-0″	8	STR.												
3 CP401	2′-9½″	40	17		1′-8″	0′-5½″	0′-8″								
3 CP402	35′-6″	4	STR.												
3 CP403	1′-5″	4	STR.												
3 CP404	2′-5″	4	17		1′-0″	1′-5″									

BENDING DIAGRAMS

ALL DIMENSIONS ARE FROM OUT TO OUT.

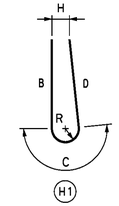

(H1)

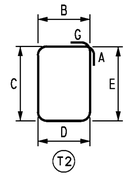

(T2)

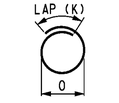

(T3)

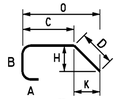

(16)

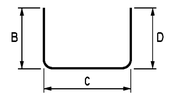

(17)

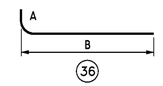

(36)

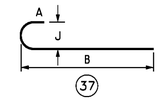

(37)

UNOFFICIAL WEBSITE COPY

O:\20832687-XM\CAD\Bridge\BR-SS\sb09_BR-SS_srf.dgn
2/10/2011
Steve_Lambert

S5-16

DELAWARE DEPARTMENT OF TRANSPORTATION

ADDENDUMS / REVISIONS

ADDENDUM NO.	
3	ADDED COPING REINF., 02/18/11, RFK

SR1 / I-95 INTERCHANGE

CONTRACT	BRIDGE NO.	1-716D
28-090-03	DESIGNED BY: K. D. BEAVER	
COUNTY	CHECKED BY: J.S. LI	
NEW CASTLE		

RAMP G1 OVER SR 7

ABUTMENTS A AND B REINFORCING BAR LIST

SHEET NO.
409
TOTAL SHTS.
803

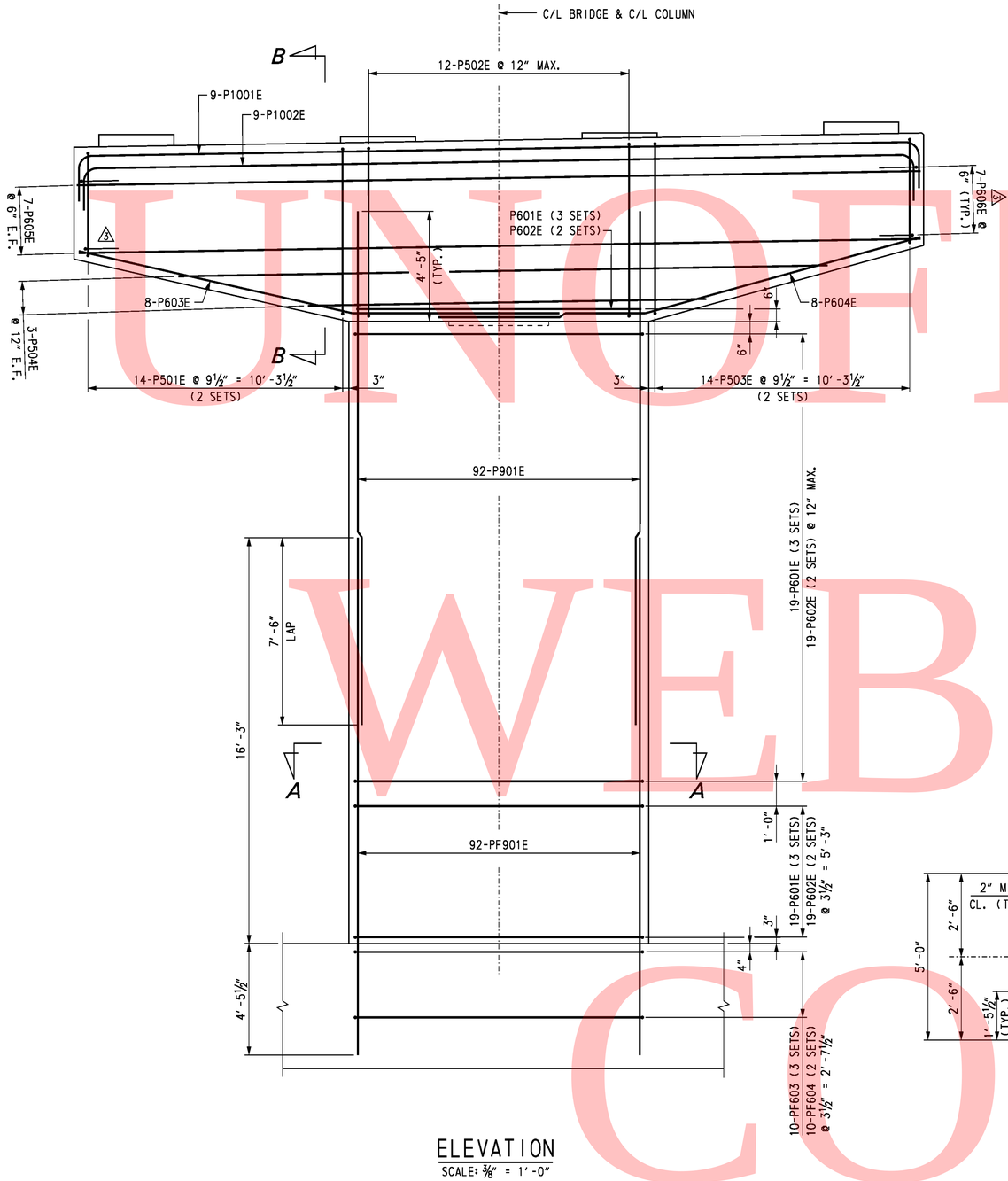

ELEVATION
SCALE: ⅜" = 1'-0"

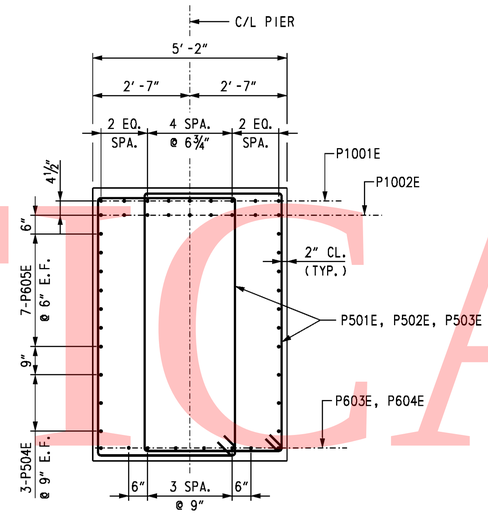

SECTION B-B
SCALE: ½" = 1'-0"

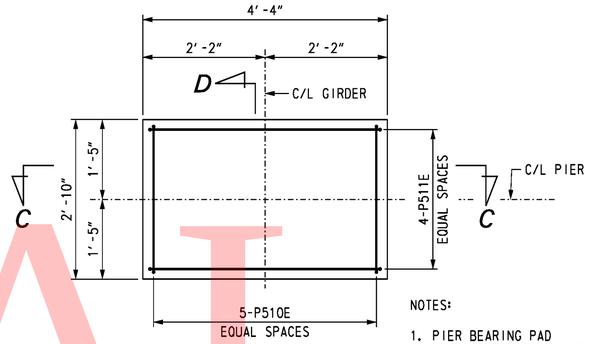

PLAN
PIER BEARING PAD
SCALE: ¾" = 1'-0"

NOTES:

1. PIER BEARING PAD REINFORCEMENT APPLIES AT PIER 1 GIRDERS G1 AND G4.
2. CHAMFER NOT SHOWN ON PLAN VIEW.

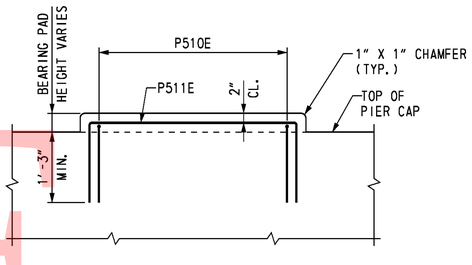

SECTION C-C
SCALE: ¾" = 1'-0"

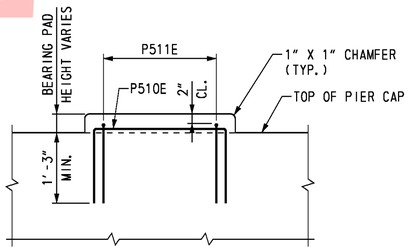

SECTION D-D
SCALE: ¾" = 1'-0"

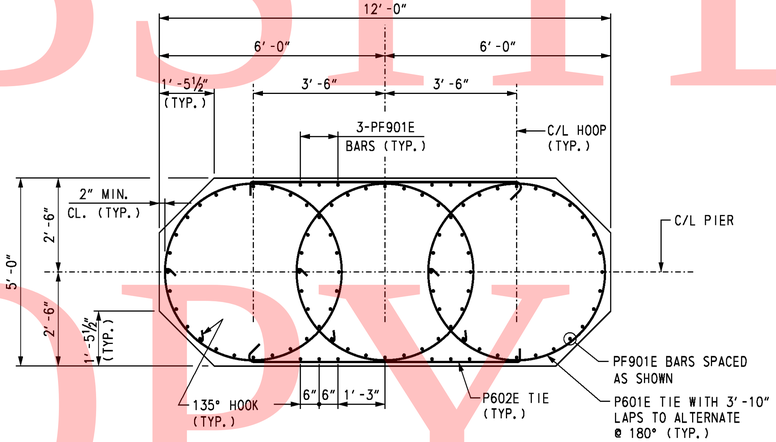

SECTION A-A
SCALE: ½" = 1'-0"

CROSS REFERENCE NOTES:

1. FOR BRIDGE PLAN AND ELEVATION, SEE DWG. S5-1.
2. FOR PIER PLAN AND ELEVATION, SEE DWG. S5-18.
3. FOR PIER FOOTING REINFORCEMENT DETAILS, SEE DWG. S5-22.
4. FOR REINFORCING BAR LIST, SEE DWG. S5-27.

UNOFFICIAL WEBSITE COPY

O:\20832687-XMI\CAD\Bridge\BR-SS\pr05_BR-S5_srf.dgn
2/10/2011
Steve_Lambert

DELAWARE
DEPARTMENT OF TRANSPORTATION

ADDENDUMS / REVISIONS	
ADDENDUM NO. 3 ADDED #6 BARS IN CAP, 02/18/11, RFK	

SR1 / I-95 INTERCHANGE

CONTRACT 28-090-03	BRIDGE NO.	1-716D	RAMP G1 OVER SR 7
COUNTY NEW CASTLE	DESIGNED BY: K. D. BEAVER		PIER 1 REINFORCEMENT 1
	CHECKED BY: R. F. KIRCHNER		

S5-21	
SHEET NO.	414
TOTAL SHTS.	803

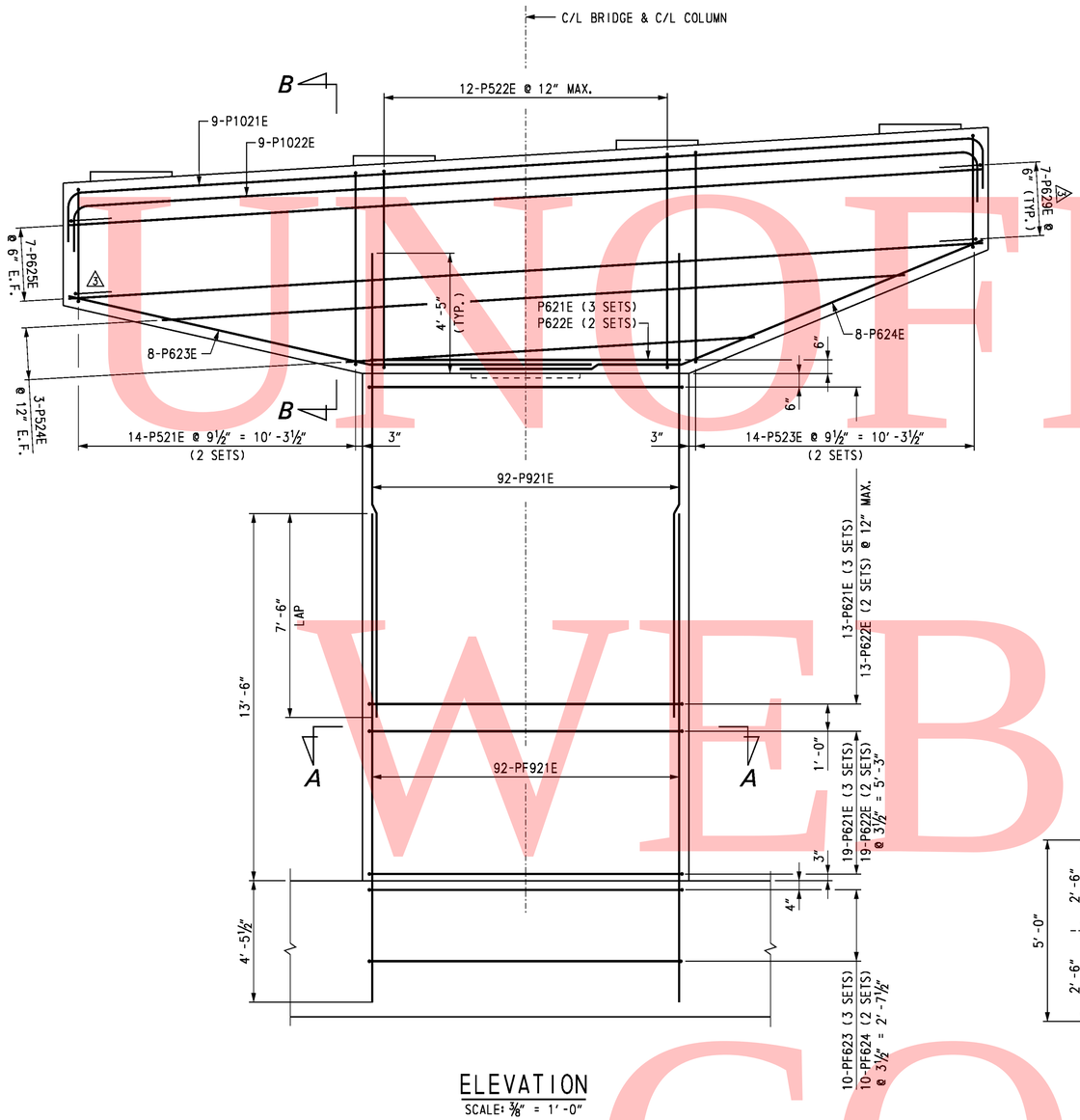

ELEVATION
SCALE: ⅜" = 1'-0"

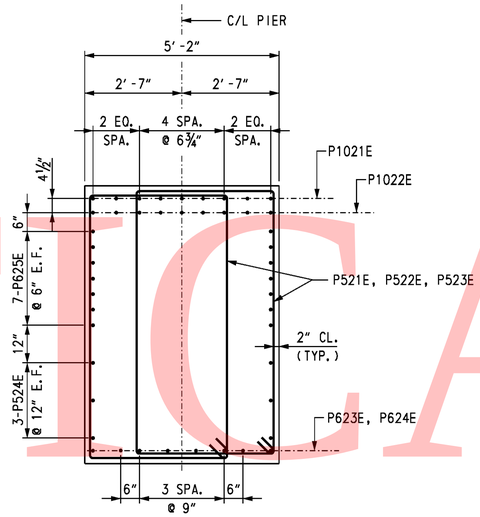

SECTION B-B
SCALE: ½" = 1'-0"

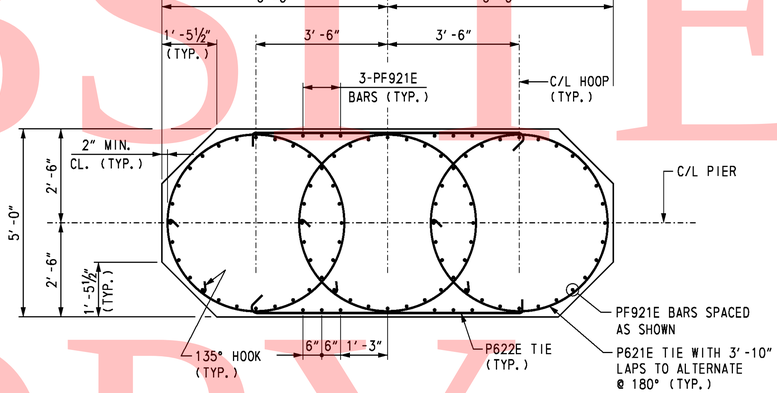

SECTION A-A
SCALE: ½" = 1'-0"

CROSS REFERENCE NOTES:

1. FOR BRIDGE PLAN AND ELEVATION, SEE DWG. S5-1.
2. FOR PIER FOUNDATION PLAN, SEE DWG. S5-17.
3. FOR PIER PLAN AND ELEVATION, SEE DWG. S5-19.
4. FOR FOOTING REINFORCEMENT, SEE DWG. S5-24.
5. FOR REINFORCING BAR LIST, SEE DWG. S5-27.

UNOFFICAL WEBSITE COPY

O:\2082687-XXM\CAD\Bridge\BR-S5\pr07_BR-S5_srf.dgn
2/10/2011
Steve_Lambert

DELAWARE
DEPARTMENT OF TRANSPORTATION

ADDENDUMS / REVISIONS	
ADDENDUM NO. 3 ADDED #6 BARS IN CAP, 02/18/11, RFK	

SR1 / I-95 INTERCHANGE

CONTRACT	BRIDGE NO.	1-716D
28-090-03	DESIGNED BY: K. D. BEAVER	
COUNTY	CHECKED BY: R. F. KIRCHNER	
NEW CASTLE		

RAMP G1 OVER SR 7
PIER 2
REINFORCEMENT 1

S5-23

SHEET NO.
416
TOTAL SHTS.
803

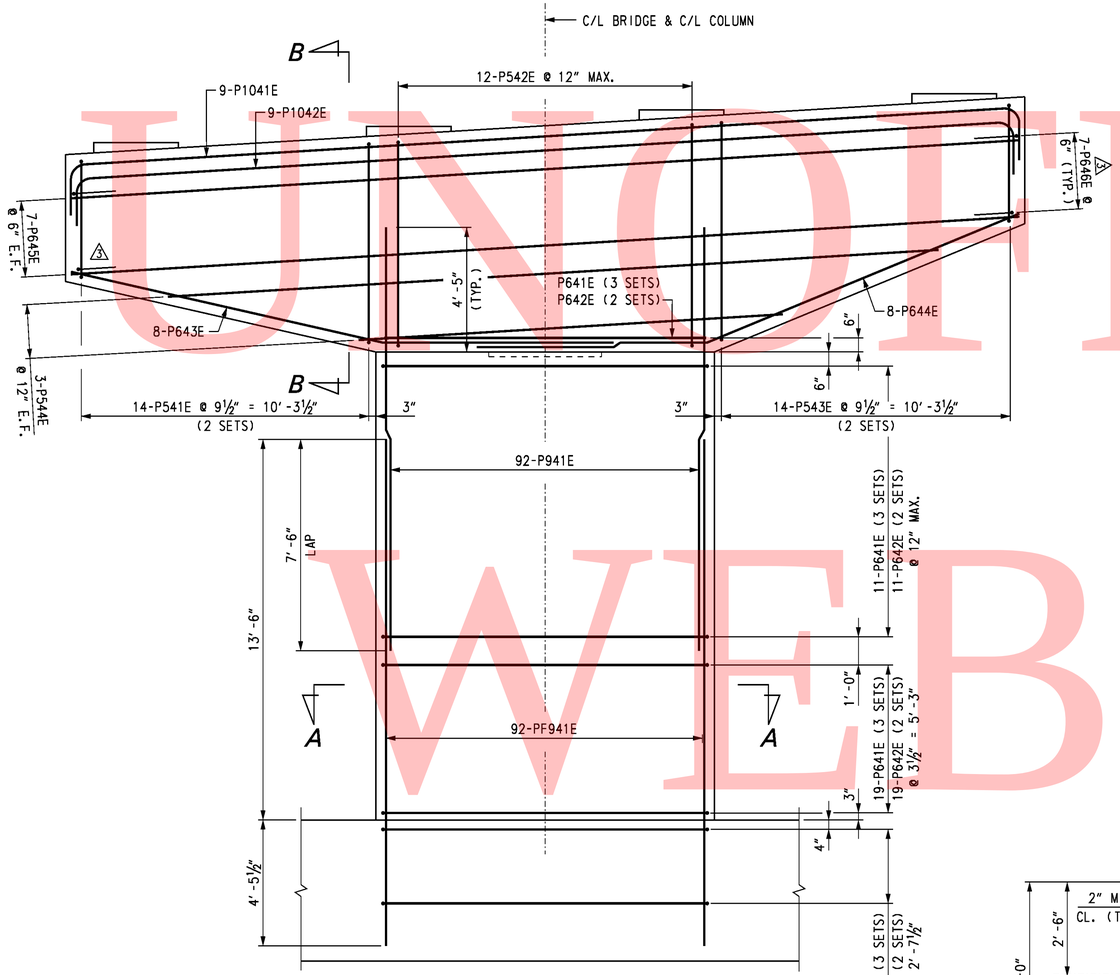

ELEVATION

SCALE: ⅜" = 1'-0"

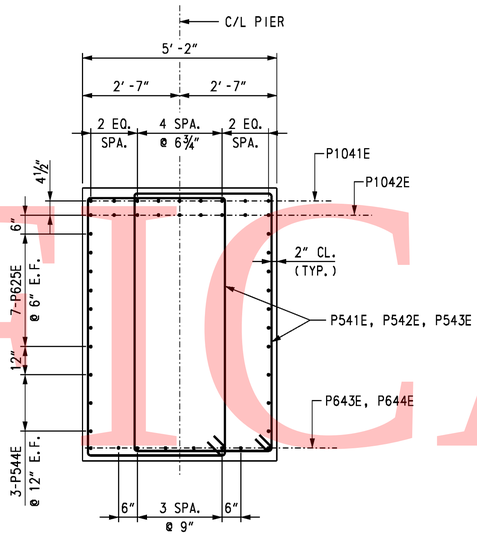

SECTION B-B

SCALE: ½" = 1'-0"

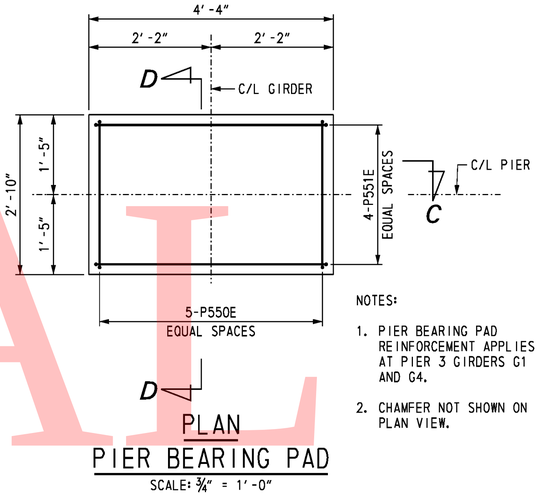

PLAN

PIER BEARING PAD

SCALE: ¾" = 1'-0"

NOTES:

1. PIER BEARING PAD REINFORCEMENT APPLIES AT PIER 3 GIRDERS G1 AND G4.
2. CHAMFER NOT SHOWN ON PLAN VIEW.

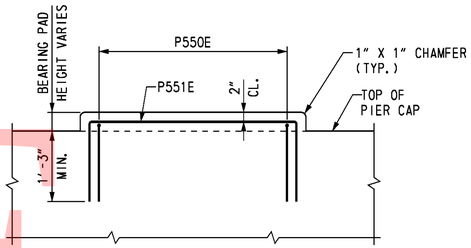

SECTION C-C

SCALE: ¾" = 1'-0"

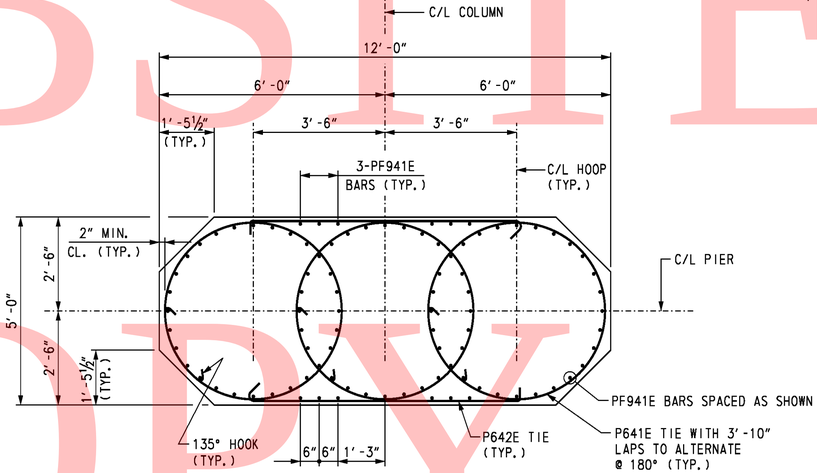

SECTION A-A

SCALE: ½" = 1'-0"

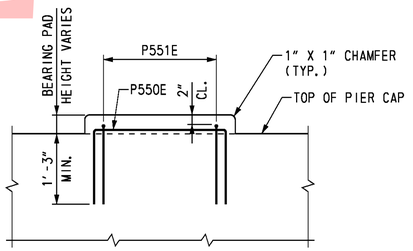

SECTION D-D

SCALE: ¾" = 1'-0"

CROSS REFERENCE NOTES:

1. FOR BRIDGE PLAN AND ELEVATION, SEE DWG. S5-1.
2. FOR PIER PLAN AND ELEVATION, SEE DWG. S5-20.
3. FOR PIER FOOTING REINFORCEMENT DETAILS, SEE DWG. S5-26.
4. FOR REINFORCING BAR LIST, SEE DWG. S5-28.

UNOFFICIAL WEBSITE COPY

O:\20832687-XMI\CAD\Bridge\BR-S5\pr09_BR-S5_srt.dgn
2/10/2011
Steve_Lambert

DELAWARE DEPARTMENT OF TRANSPORTATION

ADDENDUMS / REVISIONS	
ADDENDUM NO. 3 ADDED #6 BARS IN CAP, 02/18/11, RFK	

SR1 / I-95 INTERCHANGE

CONTRACT	BRIDGE NO.	1-716D	RAMP G1 OVER SR 7 PIER 3 REINFORCEMENT 1
28-090-03	DESIGNED BY: K. D. BEAVER		
COUNTY			
NEW CASTLE	CHECKED BY: R. F. KIRCHNER		

S5-25
SHEET NO. 418
TOTAL SHTS. 803

REINFORCING BAR LIST

PIER 1

MARK	LENGTH	NO. BARS	TYPE	A	B	C	D	E	F	G	H	J	K	O	R	REMARKS
PP401	9′-7″	315	T3										1′-6″	2′-6¾″		
PP801	34′-0″	144	STR.													
PF601	19′-6″	12	STR.													
PF602	6′-2″	53	2	1′-0″	4′-2″					1′-0″						
PF603	18′-7″	30	T3S	0′-8″						0′-8″	0′-4½″		2′-7″	4′-8″		
PF604	8′-11″	20	T9	0′-8″	7′-3″					1′-0″	0′-4½″					
PF701	19′-6″	42	STR.													
PF801	21′-4″	30	1	0′-11″	19′-6″					0′-11″		0′-8″				
PF901E	20′-8½″	92	STR.													
PF1001	22′-4″	35	1	1′-5″	19′-6″					1′-5″		1′-1¼″				
P501E	16′-9¾″ to 21′-10″	28	T1	0′-5½″	3′-8″	4′-3⅜″ to 6′-9½″	3′-8″	4′-3⅜″ to 6′-9½″		0′-5½″						$\Delta_C=\Delta_E=2\frac{1}{4}$″ 2 SETS
P502E	24′-3½″ to 24′-9″	12	T1	0′-5½″	4′-10″	6′-10¼″ to 7′-1″	4′-10″	6′-10¼″ to 7′-1″		0′-5½″						$\Delta_C=\Delta_E=\frac{1}{4}$″ 2 SETS
P503E	16′-10″ to 22′-3″	28	T1	0′-5½″	3′-8″	4′-3½″ to 7′-0″	3′-8″	4′-3½″ to 7′-0″		0′-5½″						$\Delta_C=\Delta_E=2\frac{1}{2}$″ 2 SETS
P504E	14′-8″ to 30′-8″	6	STR.													Δ=8′-0″
P510E	5′-8″	10	17		1′-7″	2′-6″	1′-7″									
P511E	7′-2″	8	17		1′-7″	4′-0″	1′-7″									
P601E	19′-11″	117	T3S	0′-8″						0′-8″	0′-4½″		3′-10″	4′-8″		
P602E	8′-11″	78	T9	0′-8″	7′-3″					1′-0″	0′-4½″					
P603E	19′-1⅜″	8	16			8′-0″	11′-1⅜″				2′-6″		10′-10″			
P604E	19′-3″	8	16			8′-0″	11′-3″				3′-0⅝″		10′-10″			
P605E	33′-8″	14	STR.													
⚠3 P606E	6′-8″	14	2	1′-0″	4′-8″					1′-0″						
P901E	20′-6″	92	STR.													
P1001E	37′-4″	9	2	1′-10″	33′-8″					1′-10″						
P1002E	36′-9″	9	2	1′-10″	33′-1″					1′-10″						

PIER 2

MARK	LENGTH	NO. BARS	TYPE	A	B	C	D	E	F	G	H	J	K	O	R	REMARKS
PP421	9′-7″	315	T3										1′-6″	2′-6¾″		
PP821	34′-0″	144	STR.													
PF621	19′-6″	12	STR.													
PF622	6′-2″	53	2	1′-0″	4′-2″					1′-0″						
PF623	18′-7″	36	T3S	0′-8″						0′-8″	0′-4½″		2′-7″	4′-8″		
PF624	8′-11″	18	T9	0′-8″	7′-3″					1′-0″	0′-4½″					
PF721	19′-6″	43	STR.													
PF821	21′-4″	30	1	0′-11″	19′-6″					0′-11″		0′-8″				
PF921E	17′-11½″	96	STR.													
PF1021	22′-4″	35	1	1′-5″	19′-6″					1′-5″		1′-1¼″				
P521E	16′-10¼″ to 22′-9¾″	28	T1	0′-5½″	3′-8″	4′-3⅝″ to 7′-3⅜″	3′-8″	4′-3⅝″ to 7′-3⅜″		0′-5½″						$\Delta_C=\Delta_E=2\frac{3}{4}$″ 2 SETS
P522E	25′-4″ to 26′-7″	12	T1	0′-5½″	4′-10″	7′-4½″ to 8′-0″	4′-10″	7′-4½″ to 8′-0″		0′-5½″						$\Delta_C=\Delta_E=1\frac{1}{16}$″ 2 SETS
P523E	16′-11″ to 24′-2¾″	28	T1	0′-5½″	3′-8″	4′-4″ to 7′-11⅞″	3′-8″	4′-4″ to 7′-11⅞″		0′-5½″						$\Delta_C=\Delta_E=3\frac{3}{8}$″ 2 SETS
P524E	16′-4″ to 29′-0″	6	STR.													Δ=6′-4″
P621E	19′-11″	99	T3S	0′-8″						0′-8″	0′-4½″		3′-10″	4′-8″		
P622E	8′-11″	66	T9	0′-8″	7′-3″					1′-0″	0′-4½″					
P623E	19′-1⅜″	8	16			8′-0″	11′-1⅜″				2′-6″		10′-10″			
P624E	19′-9″	8	16			8′-0″	11′-9″				4′-6⅝″		10′-10″			
P625E	33′-8¾″	14	STR.													
P626E	22′-7½″	2	10	7′-7¾″	7′-4″	7′-7¾″								4′-8″	2′-4″	
P627E	28′-8″	12	STR.													
P628E	17′-3″	92	STR.													
⚠3 P629E	6′-8″	14	2	1′-0″	4′-8″					1′-0″						
P1021E	37′-4″	9	2	1′-10″	33′-8″					1′-10″						
P1022E	36′-9″	9	2	1′-10″	33′-1″					1′-10″						

BENDING DIAGRAMS

ALL DIMENSIONS ARE FROM OUT TO OUT.

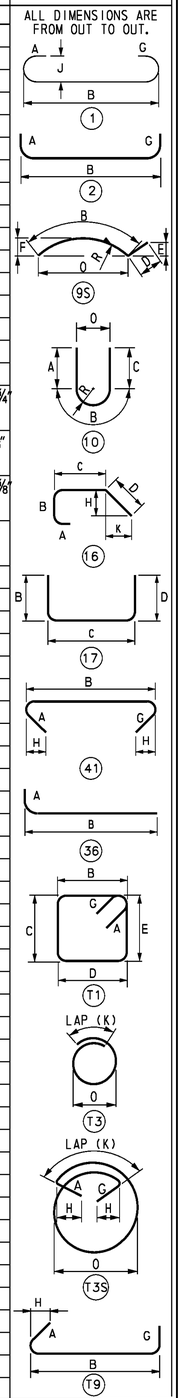

UNOFFICIAL WEBSITE COPY

O:\20832687-XM\CAD\Bridge\BR-S5\pr11_BR-S5_sr1.dgn
2/10/2011
Steve_Lambert

DELAWARE DEPARTMENT OF TRANSPORTATION

ADDENDUMS / REVISIONS

ADDENDUM NO.	
⚠3	ADD. P606E, P629E CAP BARS, 02/18/11, RFK

SR1 / I-95 INTERCHANGE

CONTRACT	BRIDGE NO.	1-716D
28-090-03	DESIGNED BY: P. M. DALONI	
COUNTY	CHECKED BY: J. S. LI	
NEW CASTLE		

RAMP G1 OVER SR 7

PIER REINFORCING BAR LIST 1

S5-27	
SHEET NO.	420
TOTAL SHTS.	803

REINFORCING BAR LIST

PIER 3

MARK	LENGTH	NO. BARS	TYPE	A	B	C	D	E	F	G	H	J	K	O	R	REMARKS
PP441	9′-7″	315	T3										1′-6″	2′-6¾″		
PP841	34′-0″	144	STR.													
PF641	19′-6″	12	STR.													
PF642	6′-2″	53	2	1′-0″	4′-2″					1′-0″						
PF643	18′-7″	30	T3S	0′-8″						0′-8″	0′-4½″		2′-7″	4′-8″		
PF644	8′-11″	20	T9	0′-8″	7′-3″					1′-0″	0′-4½″					
PF741	19′-6″	43	STR.													
PF841	21′-4″	30	1	0′-11″	19′-6″					0′-11″		0′-8″				
PF941E	17′-11½″	92	STR.													
PF1041	22′-4″	35	1	1′-5″	19′-6″					1′-5″		1′-1¼″				
										0′-4½″						
P541E	16′-10¼″ to 22′-9¾″	28	T1	0′-5½″	3′-8″	4′-3⅝″ to 7′-3⅞″	3′-8″	4′-3⅝″ to 7′-3⅞″		0′-5½″						$\Delta_C=\Delta_E=2\frac{3}{4}$″ 2 SETS
P542E	25′-4″ to 26′-7″	12	T1	0′-5½″	4′-10″	7′-4½″ to 8′-0″	4′-10″	7′-4½″ to 8′-0″		0′-5½″						$\Delta_C=\Delta_E=1\frac{1}{4}$″ 2 SETS
P543E	16′-11″ to 24′-2¾″	28	T1	0′-5½″	3′-8″	4′-4″ to 7′-11⅞″	3′-8″	4′-4″ to 7′-11⅞″		0′-5½″						$\Delta_C=\Delta_E=3\frac{3}{8}$″ 2 SETS
P544E	16′-4″ to 29′-0″	6	STR.													Δ =6′-4″ 2 SETS
P550E	5′-8″	10	17		1′-7″	2′-6″	1′-7″									
P551E	7′-2″	8	17		1′-7″	4′-0″	1′-7″									
P641E	19′-11″	93	T3S	0′-8″						0′-8″	0′-4½″		3′-10″	4′-8″		
P642E	8′-11″	62	T9	0′-8″	7′-3″					1′-0″	0′-4½″					
P643E	19′-1⅜″	8	16			8′-0″	11′-1⅜″				2′-6″		10′-10″			
P644E	19′-9″	8	16			8′-0″	11′-9″				4′-6⅝″		10′-10″			
P645E	33′-8″	14	STR.													
3 P646E	6′-8″	14	2	1′-0″	4′-8″					1′-0″						
P941E	15′-0″	92	STR.													
P1041E	37′-4″	9	2	1′-10″	33′-8″					1′-10″						
P1042E	36′-9″	9	2	1′-10″	33′-1″					1′-10″						

BENDING DIAGRAMS

ALL DIMENSIONS ARE FROM OUT TO OUT.

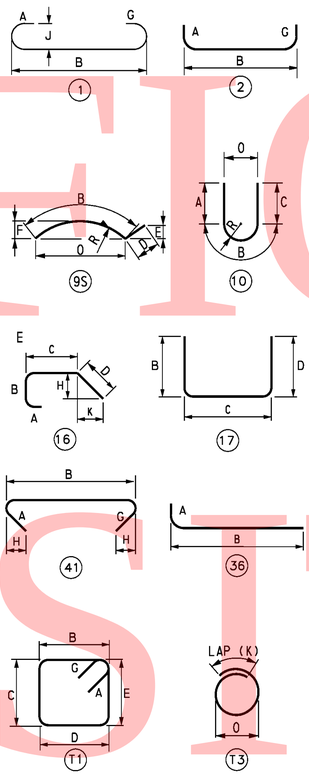

UNOFFICAL WEBSITE COPY

O:\20832887-XM\CAD\Bridge\BR-S5\prf2_BR-S5_srf.dgn
2/10/2011
Steve_Lambert

DELAWARE DEPARTMENT OF TRANSPORTATION

ADDENDUMS / REVISIONS

ADDENDUM NO. 3 ADDED P646E CAP BARS, 02/18/11, RFK

SR1 / I-95 INTERCHANGE

CONTRACT	BRIDGE NO.	1-716D
28-090-03	DESIGNED BY: P. M. DALONI	
COUNTY	CHECKED BY: J. S. LI	
NEW CASTLE		

RAMP G1 OVER SR 7

PIER REINFORCING BAR LIST 2

SHEET NO.	TOTAL SHTS.
S5-28	
421	803

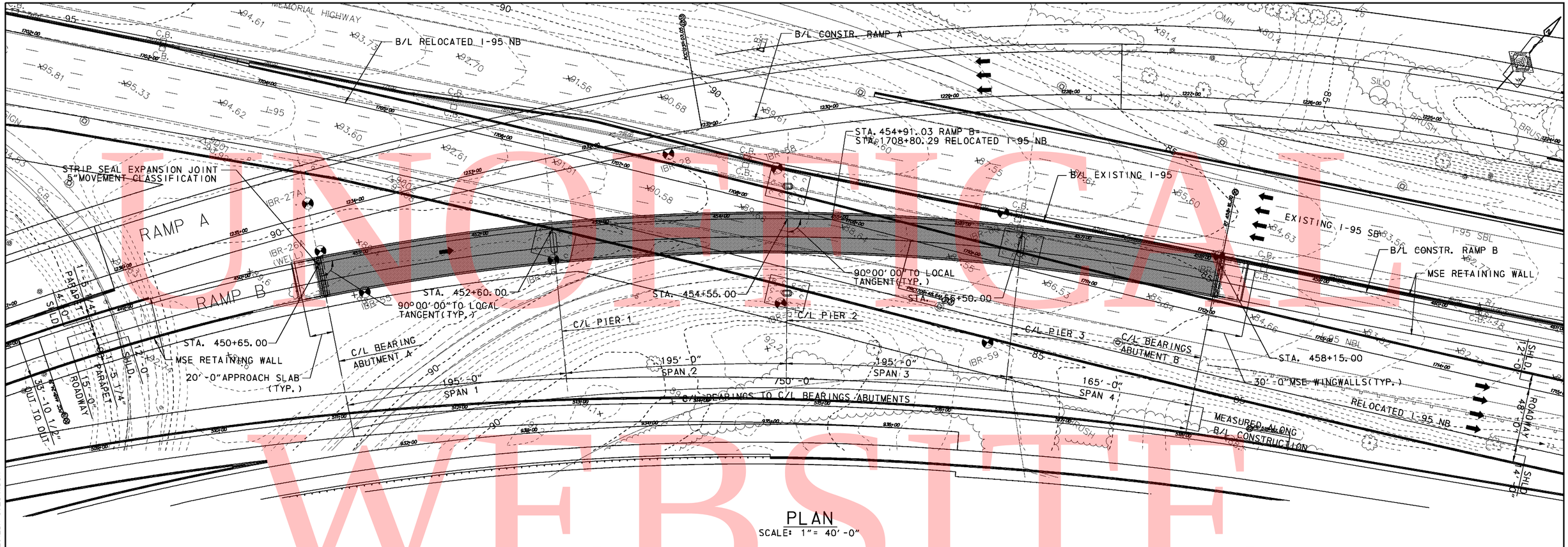

PLAN
SCALE: 1"= 40'-0"

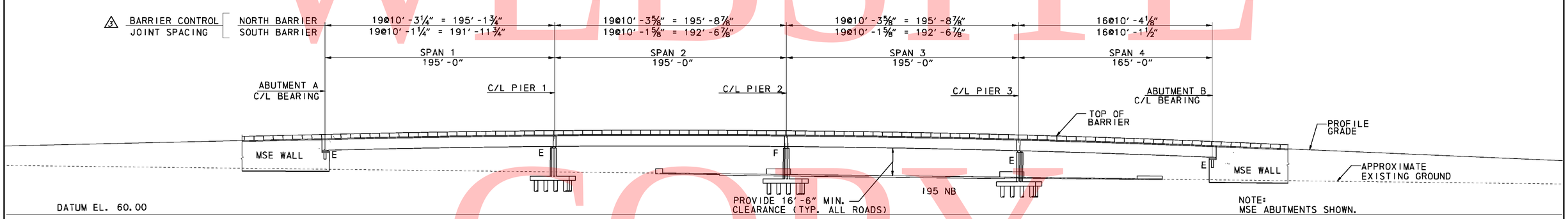

ELEVATION
SCALE: 1"= 40'-0"

NOTE:
MSE ABUTMENTS SHOWN.

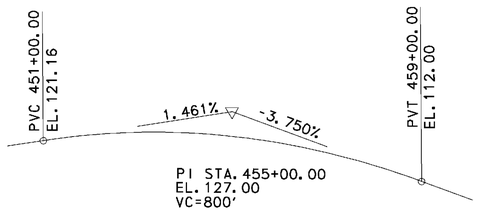

RAMP B-VERTICAL CURVE DATA
NOT TO SCALE

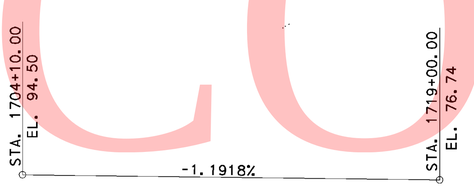

RELOCATED I-95 NB PROFILE
NOT TO SCALE

B/L CONSTR. RAMP B CURVE DATA

PI STA. 453+31.90
△ = 29° 54' 47.21" RT
Dc = 3° 00' 56.04"
R = 1,900.0000'
T = 507.5597'
L = 991.9565'

NOTE:
1. FOR GENERAL NOTES, SEE DWG. NO S6-2.
2. GUIDED POT BEARINGS AT ABUTMENT A AND B AND PIERS 1 AND 3. NON-GUIDED POT BEARINGS AT ABUTMENT A AND B.
3. PIER 2 IS A CONCRETE FILLED INTEGRAL CROSS GIRDER.
4. MINIMUM VERTICAL CLEARANCE IS MEASURED TO THE BOTTOM OF PIER CAP AND INCLUDES 3'-0" ALLOWANCE FOR TEMPORARY SHORING.

UNOFFICIAL WEBSITE COPY

2/16/2011 5:23:59 PM
M:\PROJECTS\2003\03059_DELTRNPK\SR1_MALL\PHASE II\CONSTRUCTION SERVICES\ADDENDUM 3\CADD WORKING DRAWINGS\PE01_BR-S6_SR1.DGN

DELAWARE DEPARTMENT OF TRANSPORTATION

ADDENDUMS / REVISIONS	
ADDENDUM NO. 3, BARRIER CONTROL JOINT SPACING CALLOUT, 02/18/11, DWD	

SR1 / I-95 INTERCHANGE

CONTRACT	BRIDGE NO.	1-268B
28-090-03	DESIGNED BY:	MDM
COUNTY	CHECKED BY:	DWD
NEW CASTLE		

RAMP B OVER I-95NB
GENERAL PLAN AND ELEVATION

S6-1

SHEET NO.	TOTAL SHTS.
448	803

GENERAL NOTES

1. DESIGN SPECIFICATIONS
AASHTO LRFD BRIDGE DESIGN SPECIFICATIONS 4TH EDITION WITH 2009 INTERIM
DELAWARE DEPARTMENT OF TRANSPORTATION BRIDGE DESIGN MANUAL, MAY 2005 INCLUDING LATEST REVSIONS
ANSI/AASHTO/AWS D1.5 BRIDGE WELDING CODE.

2. LOADING
UNIT WEIGHTS OF MATERIALS ARE IN ACCORDANCE WITH THE DELAWARE DESIGN MANUAL.
FUTURE OVERLAY ALLOWANCE IS 25 PSF.
STEEL BRIDGE DECK FORMS WHICH STAY IN PLACE (INCLUDING CONCRETE IN FORM CORRUGATIONS) IS 15 PSF.
VEHICLE LIVE LOAD IS HL-93, WHICH CONSISTS OF A DESIGN TRUCK OR TANDEM WITH DYNAMIC LOAD
ALLOWANCE AND A LANE LOAD RATING, WILL USE ALL DELAWARE LEGAL LOADS SPECIFIED IN THE BRIDGE
DESIGN MANUAL. BARRIER HAS BEEN DESIGNED FOR TEST LEVER FIVE (TL-5).
FATIGUE DESIGN SHALL BE BASED ON THE FOLLOWING ONE DIRECTIONAL TRAFFIC VOLUMES:
RAMP B OVER I-95NB:

DESIGN ADT=18,650, DESIGN ADTT=1,679.

FOR THERMAL LOADS, CONSIDER THE MODERATE TEMPERATURE RANGE AS STIPULATED IN THE
AASHTO LRFD DESIGN SPECIFICATIONS. THE NORMAL TEMPERATURE IS CONSIDERED TO BE 60F.
FOR SEISMIC LOADS, THE PROJECT SITE IS LOCATED WITHIN SEISMIC PERFORMANCE ZONE 1, WITH A
SITE CLASS E AND IMPORTANCE CATEGORY - CRITICAL.

△3 3. PORTLAND CEMENT CONCRETE
PORTLAND CEMENT CONCRETE FOR CAST-IN-PLACE ELEMENTS SHALL BE AS FOLLOWS:
(28 DAY COMPRESSIVE STRENGTH)
~~ITEM NO. 602007 (CLASS A, F'C=4500 PSI) - PIER ABOVE FOOTING~~
~~ITEM NO. 602011 (CLASS A, F'C=4500 PSI) - PIER FOOTING, TOP OF PIER PILES~~
ITEM NO. 602013 (CLASS D, F'C=4500 PSI) - DECK
~~ITEM NO. 602014 (CLASS D, F'C=4500 PSI) - APPROACH SLAB~~
~~ITEM NO. 602015 (CLASS A, F'C=4500 PSI) - ABUTMENT, TOP OF ABUTMENT PILES~~
~~ITEM NO. 602017 (CLASS A, F'C=4500 PSI) - PARAPET~~
~~ITEM NO. 602785 (CLASS A, F'C=6000 PSI) - POST-TENSIONED PIER CAP, CROSS-GIRDER~~
MIX REQUIREMENTS SHALL CONFORM TO SECTION 812 OF THE DELAWARE DEPARTMENT OF
TRANSPORTATION STANDARD SPECIFICATIONS. ALL EXPOSED CORNERS OF CONCRETE SHALL BE
CHAMFERED WITH 3/4" X 3/4" MILLED CHAMFER STRIPS UNLESS NOTED OTHERWISE,
EXCEPT ON UNEXPOSED FOOTINGS OR WHERE INDICATED BY THE NOTATION ON THE PLANS,
"DO NOT CHAMFER". ~~NO SLIP FORMING OF PARAPETS IS PERMITTED.~~ △3

4. BAR REINFORCEMENT
REINFORCING STEEL SHALL CONFORM TO AASHTO M31 (ASTM A615), GRADE 60. ALL REINFORCING
STEEL SHALL HAVE A CLEAR COVER OF 2" UNLESS OTHERWISE SPECIFIED ON THE PLANS.
EPOXY COATED REINFORCING STEEL SHALL CONFORM TO AASHTO M284 (ASTM D3963), AND IS
DENOTED WITH A SUFFIX "E" IN THE BAR MARKS. EPOXY COATED REINFORCING STEEL IS USED
IN THE FOLLOWING LOCATIONS:
APPROACH SLABS
DECK SLAB
PARAPETS AND BARRIERS
BEARING SEAT PADS
ABUTMENT BEARING SEAT REGIONS
ABUTMENT BACKWALLS
PARAPET PORTION OF WINGWALLS
DO NOT WELD GRADE 60 REINFORCING STEEL.

5. POST-TENSIONING STEEL
ALL POST-TENSIONING STRAND TENDONS SHALL CONSIST OF 0.6 INCH DIAMETER SEVEN WIRE
UNCOATED LOW RELAXATION STRANDS CONFORMING TO AASHTO M203 (ASTM A416), GRADE 270.
DUCTS SHALL BE 4 1/2 INCH DIA. POLYETHYLENE/POLYPROPYLENE (PE/PP) PLASTIC DUCTS.
CROUT FOR DUCTS SHALL BE IN ACCORDANCE WITH ITEM NO. 602779 "POST TENSIONING GROUT."

6. STRUCTURAL STEEL
STRUCTURAL STEEL SHALL CONFORM TO ASTM A709, GRADE 50W, AND ASTM A709, GRADE
HPS 70W INCLUDING THE ADDITIONAL REQUIREMENTS FOR CHARPY V-NOTCH TESTING OF
AASHTO M270 FOR PRIMARY LOAD CARRYING MEMBERS. THE PRIMARY LOAD CARRYING MEMBER COMPONENTS
ARE THE FLANGES, WEBS AND SPLICE PLATES OF THE STEEL GIRDERS. THE USE OF FRACTURE CRITICAL
MEMBERS IS PROHIBITED. FATIGUE CATEGORIES D, E AND F SHALL NOT BE USED IN STRESS REVERSAL OR
TENSION AREAS, EXCEPT FOR TEMPORARY CONDITIONS.

TEN FEET AT THE ENDS OF EACH GIRDER AND THE END CROSS FRAMES SHALL BE PAINTED
WITH A URETHANE PAINT SYSTEM IN ACCORDANCE WITH SPECIAL PROVISION #605537-URETHANE
PAINT SYSTEM. THE FINAL COLOR SHALL BE FEDERAL #10076 (BROWN) OF FED-STD-595B.
COST OF PAINTING SHALL BE INCIDENTAL TO ITEM 605002, STEEL STRUCTURES.

ALL BOLTS SHALL CONFORM TO ASTM A325, WITH THREADS EXCLUDED FROM SHEAR PLANES.
BOLTED CONNECTIONS SHALL BE CLASS B SLIP CRITICAL CONNECTIONS, UNLESS NOTED ON
THE PLANS.

7. SERVICEABILITY
LIVE LOAD DEFLECTION SHALL BE LIMITED TO L/800.
FOR REINFORCEMENT DISTRIBUTION REQUIREMENTS, CONSIDER CLASS 2 EXPOSURE CRITERIA.
ACCOMODATION TO JACK GIRDERS FOR FUTURE BEARING REPLACEMENT HAS BEEN CONSIDERED
IN THE DESIGN.

8. CONSTRUCTION JOINTS
KEYED CONSTRUCTION JOINTS SHALL BE 2"X4" OR AS NOTED. ALL EXPOSED CONSTRUCTION
JOINT EDGES SHALL HAVE A 3/4" V-NOTCH.

△3 ~~9. SHEETING AND SHORING
SHEETING AND SHORING SHALL BE REQUIRED FOR ANY EXCAVATION EXCEEDING 5 FEET
IN HEIGHT. THE COST SHALL BE PAID UNDER ITEM 207501. IN LIEU OF SHORING, THE
CONTRACTOR MAY USE A 2:1 CUT SLOPE. NO PAYEMENT SHALL BE MADE FOR ADDITIONAL
EXCAVATION OR FILL OUTSIDE THE LIMITS AS DEFINED IN SECTION 207 OF THE STD SPEC.~~

10. EXCAVATION REQUIRED TO ATTAIN THE GRADE FOR INSTALLATION OF MSE WALLS SHALL BE
INCIDENTAL TO ITEM NO. 602772 - MECHANICALLY STABILIZED EARTH WALLS.

11. STRUCTURAL BACKFILL SHALL CONFORM TO THE REQUIREMENTS OF BORROW
TYPE C. MSE WALL BACKFILL SHALL ALSO CONFORM TO BORROW TYPE C.

12. ROADWAY CLEARANCES
A MINIMUM OF 16'-6" VERTICAL CLEARANCE SHALL BE MAINTAINED ABOVE ALL ROADWAYS.
A MINUMUM OF 2'-0" HORIZONTAL CLEARANCE SHLL BE MAINTAINED FROM THE OUTSIDE EDGE
OF SHOULDER OFFSET (FACE OF CURB) TO THE FACE OF ANY OBSTRUCTION.

△3 12. MASS CONCRETE
CONCRETE ELEMENTS LISTED BELOW ARE DESIGNATED AS MASS CONCRETE. SEE SPECIAL
PROVISIONS 602785 - PCC MASONRY SUBSTRUCTURE, 6000 PSI AND 602786 - PCC MASONRY
SUBSTRUCTURE, 8000 PSI.

PIER 1 - POST-TENSIONED PIER CAP
PIER 2 - CROSS-GIRDER
PIER 3 - POST-TENSIONED PIER CAP

BRIDGE LEGAL LOAD RATING (TONS)
RAMP B OVER 195

TRUCK TYPE	RATING FACTOR	SAFE LOAD CAPACITY
HS-20	1.84	66.2
S 220	3.40	68.0
S 327	2.49	67.2
S 335	1.88	65.8
S 437	1.80	66.6
T 330	2.28	68.4
T 435	1.94	67.9
T 540	1.69	67.6

BRIDGE DESIGN LOAD RATING:
INVENTORY = 1.21
OPERATING = 2.11

CROSS REFERENCE NOTES

1. FOR MSE WALL NOTES, SEE DWG. S6-14

△3 602007 PORTLAND CEMENT CONCRETE MASONRY, PIER ABOVE FOOTING, CLASS A (F'C = 4,500 PSI, PIER ABOVE FOOTING)
602011 PORTLAND CEMENT CONCRETE MASONRY, PIER FOOTING, CLASS A (F'C = 4,500 PSI, PIER FOOTING, TOP OF PIER PILES)
602013 PORTLAND CEMENT CONCRETE MASONRY, SUPERSTRUCTURE, CLASS D (F'C = 4,500 PSI, DECK)
602014 PORTLAND CEMENT CONCRETE MASONRY, APPROACH SLAB, CLASS D (F'C = 4,500 PSI, APPROACH SLAB)
602015 PORTLAND CEMENT CONCRETE MASONRY, ABUTMENT ABOVE FOOTING, CLASS A (F'C = 4,500 PSI, ABUTMENT, TOP OF ABUTMENT PILES)
602017 PORTLAND CEMENT CONCRETE MASONRY, PARAPET, CLASS A (F'C = 4,500 PSI, PARAPET)
602785 PORTLAND CEMENT CONCRETE MASONRY, SUBSTRUCTURE, CLASS A 6,000 PSI (F'C = 6,000 PSI, CROSS GIRDER, PIER CAP 1 & 3)
602787 POST TENSIONING PIER CAPS, BONDED SYSTEM, (PIER CAP 1 & 3)

UNOFFICIAL WEBSITE COPY

2/24/2011 9:27:22 AM
M:\PROJECTS\2003\03059_DELTRNPK\SR1_WALL\CADD\2809003\PLANS.DGN\PN01_BR-S6_SR1.DGN

DELAWARE
DEPARTMENT OF TRANSPORTATION

ADDENDUMS / REVISIONS	
ADDENDUM NO. △3, NOTES, 02/18/11, DWD	

SR1 / I-95 INTERCHANGE

CONTRACT	28-090-03
COUNTY	NEW CASTLE
BRIDGE NO.	1-268B
DESIGNED BY:	DWD
CHECKED BY:	

RAMP B OVER I-95NB
GENERAL NOTES

SHEET NO.	S6-2
TOTAL SHTS.	449
	803

UNOFFICIAL WEBSITE COPY

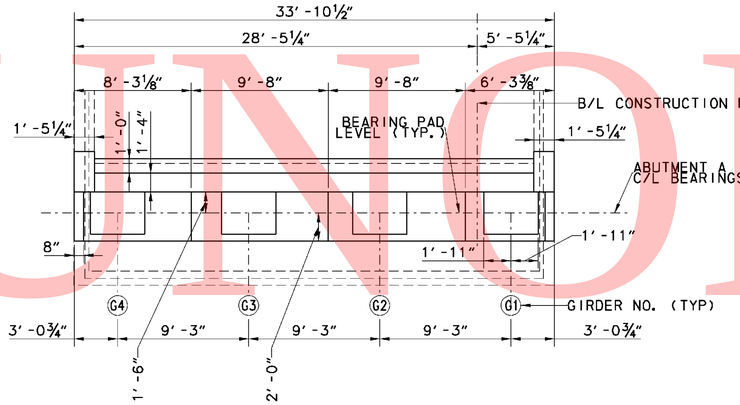

ABUTMENT A PLAN

SCALE: 3/16″ = 1′-0″

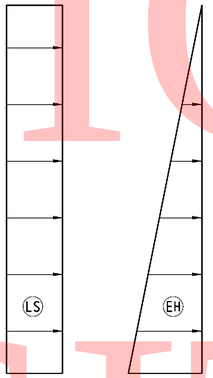

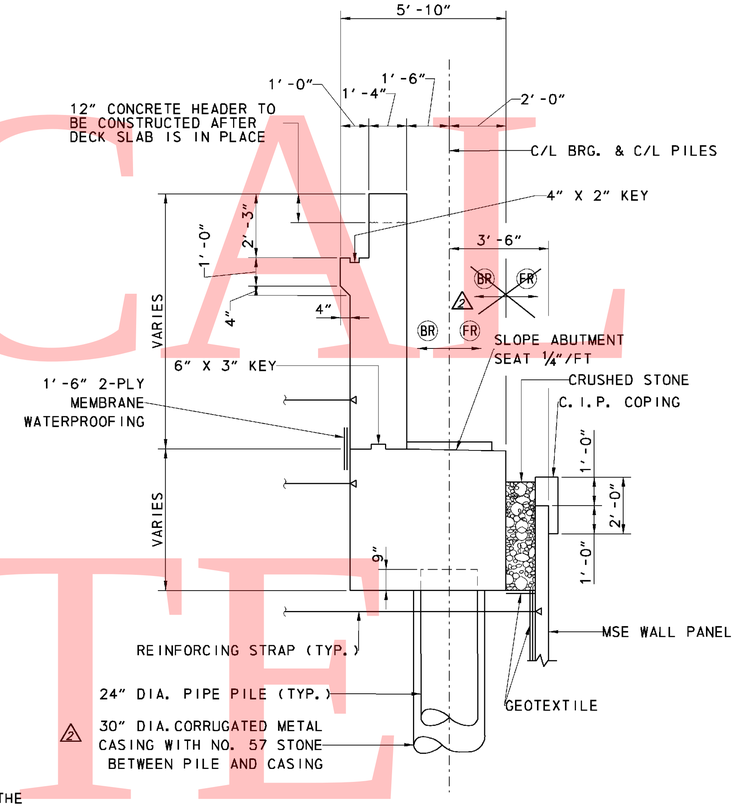

TYPICAL ABUTMENT SECTION

SCALE: 3/8″ = 1′-0″

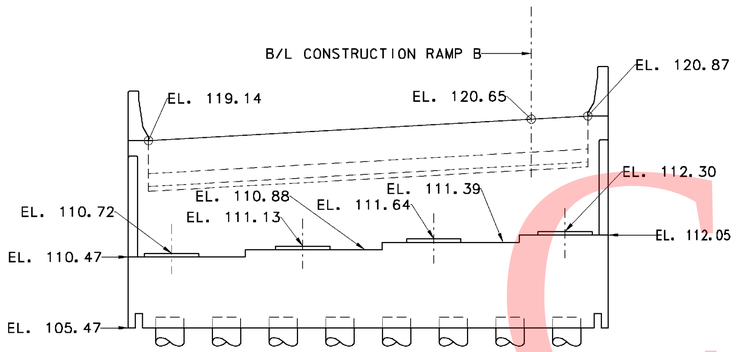

ABUTMENT A ELEVATION

SCALE: 3/16″ = 1′-0″

ABUTMENT NOTES:

1. CONTRACTOR SHALL DESIGN THE SOIL REINFORCING STRAPS IN THE ABUTMENT STEM AND BACKWALL TO RESIST LATERAL LOADS "EH", "LS", "BR" AND "FR".
2. LOAD "EH" IS THE HORIZONTAL EARTH PRESSURE EXERTED ON THE ABUTMENT.
3. LOAD "LS" IS THE ADDITIONAL HORIZONTAL SOIL PRESSURE DUE TO 3 FEET OF SOIL SURCHARGE. CONTRACTOR IS RESPONSIBLE FOR PROVIDING MSE WALL DESIGNER WITH OTHER CONSTRUCTION LOADS WHICH WILL BE IN EXCESS OF 3 FEET OF SOIL SURCHARGE.
4. LOAD "BR" IS THE HORIZONTAL LOAD DUE TO BRAKING FORCE ON THE SUPERSTRUCTURE.
5. LOAD "FR" IS THE HORIZONTAL LOAD DUE TO FRICTION ON THE BEARINGS AS A RESULT OF BRIDGE EXPANSION AND CONTRACTION.
6. ~~THE POINT OF APPLICATION OF LOADS.~~

ABUTMENT LATERAL LOADS

TYPE	SERVICE LOAD (KIPS/FT.)
EH	3.00
LS	1.31
BR	0.19
FR	1.11

△2 6. THE POINT OF APPLICATION OF THE LOADS "EH" AND "LS" ARE AT THE CENTROID OF THE PRESSURE DIAGRAM. THE LOADS "BR" AND "FR" ARE APPLIED AT THE CENTER OF THE BEARINGS. THE LOADS "BR" AND "FR" MAY ACT TOGETHER IN EITHER DIRECTION.

NOTES:

1. CRUSHED STONE AND GEOTEXTILE BETWEEN MSE WALL COPING AND ABUTMENT FOOTING SHALL BE INCIDENTAL TO ITEM NO. 602772 - MECHANICALLY STABILIZED EARTH WALLS.
2. MSE WALL AND COPING NOT SHOWN IN ELEVATION VIEW.

CROSS REFERENCE NOTES:

1. FOR BRIDGE PLAN AND ELEVATION, SEE DWG. S6-1.
2. FOR TYPICAL SIDE ELEVATION, SEE DWG. S6-9.
3. FOR MSE WINGWALLS PLAN AND ELEVATION, SEE DWG. S6-12.
4. FOR ABUTMENT REINFORCEMENT, SEE DWG. S6-7 & S6-8.

△3 5. FOR MSE WALL CIP COPING DETAILS, SEE DWG. S6-9.

△2 3. METAL CASINGS FOR PILES SHALL EXTEND FROM BOTTOM OF ABUTMENT TO BOTTOM OF MSE WALL LEVELING PAD. COST OF METAL IS CASING AND NO. 57 STONE SHALL BE INCIDENTAL TO FURNISHING 24" STEEL PIPE PILE ITEM.

2/16/2011 4:50:17 PM
M:\PROJECTS\2003\03059_DELTRNPK\SR1_MALL\PHASE III\CONSTRUCTION SERVICES\ADDENDUM 3\CADD WORKING DRAWINGS\AB01_BR-S6_SR.DGN

DELAWARE DEPARTMENT OF TRANSPORTATION

ADDENDUMS / REVISIONS

ADDENDUM NO. △2, UPDATED TYPICAL ABUTMENT SECTION, MODIFIED NOTES, 01/26/11, DWD	
ADDENDUM NO. △3, ADDED NOTE, 02/18/11, DWD	

SR1 / I-95 INTERCHANGE

CONTRACT	28-090-03	BRIDGE NO.	1-268B
COUNTY	NEW CASTLE	DESIGNED BY:	RMB
		CHECKED BY:	DWD

RAMP B OVER I-95NB
ABUTMENT A
PLAN AND ELEVATION

S6-6	
SHEET NO.	453
TOTAL SHTS.	803

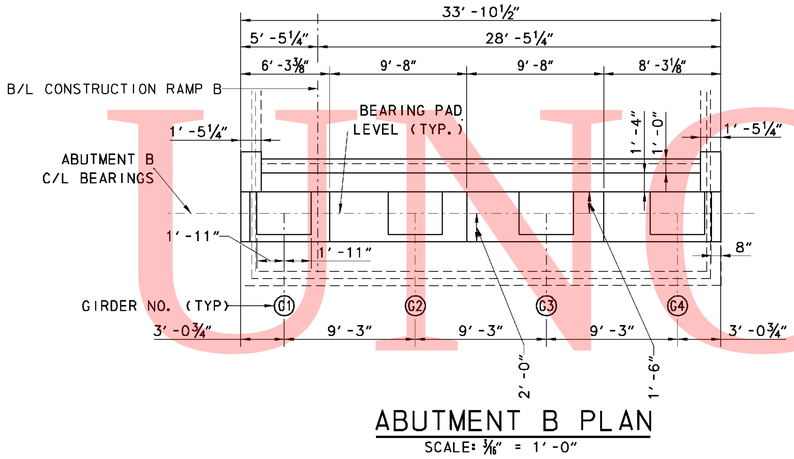

ABUTMENT B PLAN

SCALE: 1/16" = 1'-0"

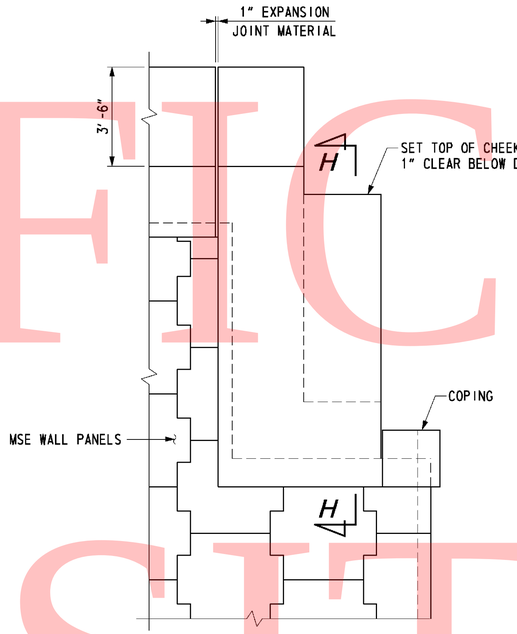

TYPICAL SIDE ELEVATION

SCALE: 3/8" = 1'-0"

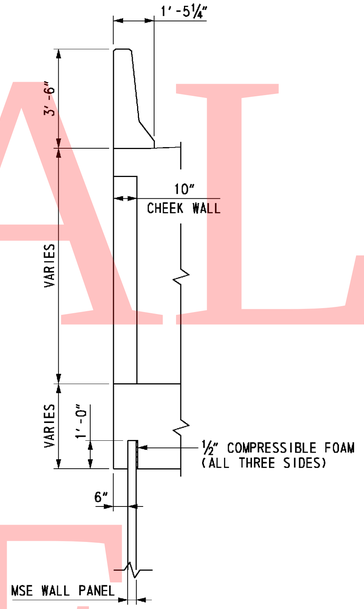

SECTION H-H

SCALE: 3/8" = 1'-0"

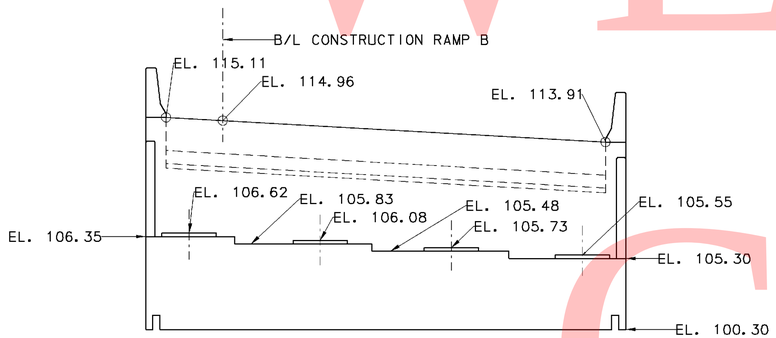

ABUTMENT B ELEVATION

SCALE: 1/16" = 1'-0"

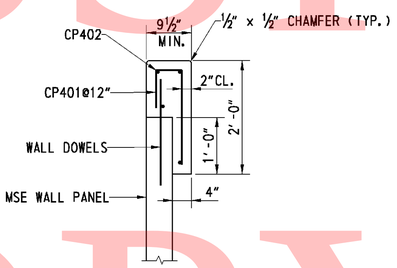

⚠3 COPING DETAIL

SCALE: ¾" = 1'-0"

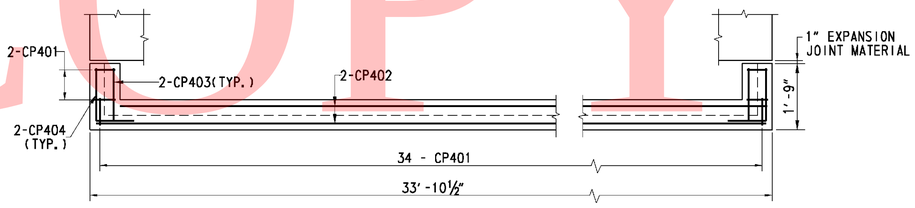

⚠3 COPING REINFORCING PLAN

SCALE: ½" = 1'-0"

NOTE:

1. MSE WALL AND COPING NOT SHOWN IN ELEVATION VIEW.

CROSS REFERENCE NOTES:

1. FOR BRIDGE PLAN AND ELEVATION, SEE DWG. S6-1.
2. FOR TYPICAL ABUTMENT SECTION, SEE DWG. S6-6.
3. FOR MSE WINGWALLS PLAN AND ELEVATION, SEE DWG. S6-12.
4. FOR ABUTMENT REINFORCEMENT, SEE DWG. S6-7 & S6-8.

UNOFFICIAL WEBSITE COPY

2/16/2011 5:35:41 PM
M:\PROJECTS\2003\03059_DELTRNPK\SR1_MALL\CADD\2809003S\PLANS.DGN\AB04_BR-S6_SR1.DGN

DELAWARE DEPARTMENT OF TRANSPORTATION

ADDENDUMS / REVISIONS	
ADDENDUM NO. ⚠3, COPING DETAIL, COPING REINFORCEMENT, 02/18/11, DWD	

SR1 / I-95 INTERCHANGE

CONTRACT 28-090-03	BRIDGE NO.	1-268B	RAMP B OVER I-95NB ABUTMENT B PLAN AND ELEVATION
COUNTY NEW CASTLE	DESIGNED BY:	RMB	
	CHECKED BY:	DWD	

S6- 9	
SHEET NO.	456
TOTAL SHTS.	803

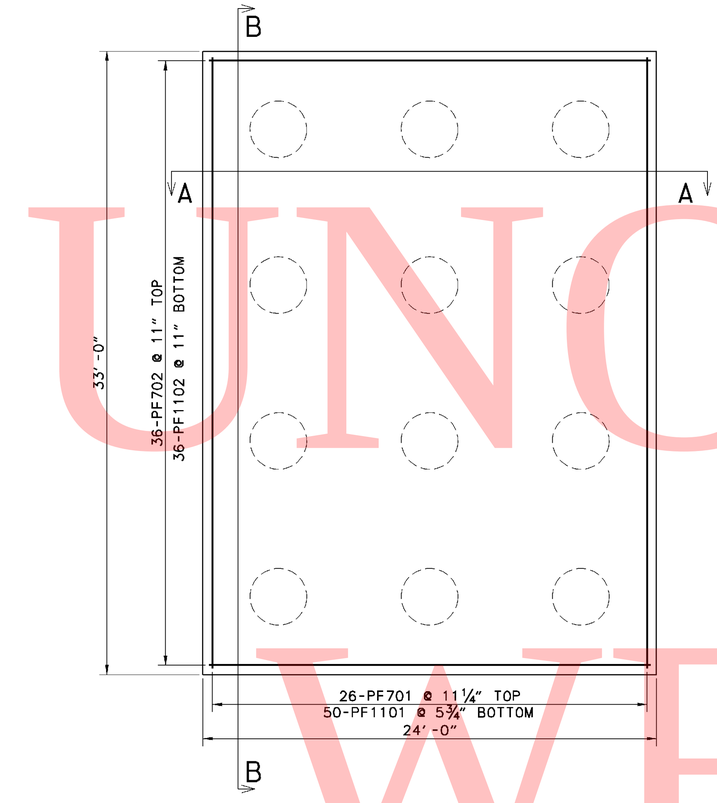

⚠2 TOP AND BOTTOM MAT REINFORCING PLAN

SCALE: ¼"=1'-0"

NOTE:

1. PIER FOUNDATION DETAILS ARE FOR PIERS 1, 2N, 2S AND 3.

CROSS REFERENCE NOTES:

1. FOR BRIDGE PLAN AND ELEVATION, SEE DWG. S6-1.
2. FOR PIER FOUNDATION PLAN, SEE DWG. S6-16.
3. FOR PIER 1 PLAN AND ELEVATION, SEE DWG. S6-19.
   FOR PIER 2N AND2S PLAN AND ELEVATION, SEE DWG. S6-21.
   FOR PIER 3 PLAN AND ELEVATION, SEE DWG. S6-26.
4. FOR REINFORCEMENT SCHEDULES, SEE DWG. S6-30.

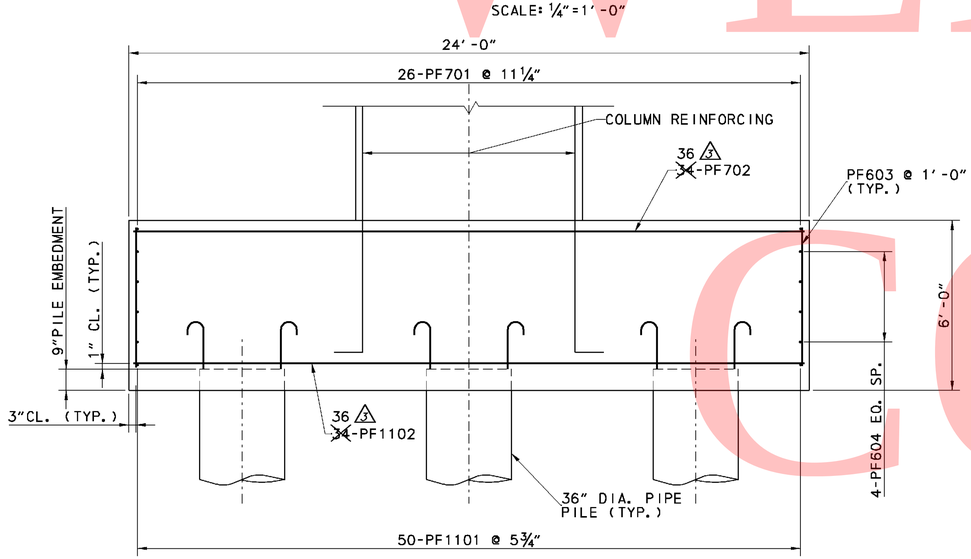

SECTION A-A

SCALE: ⅜"=1'-0"

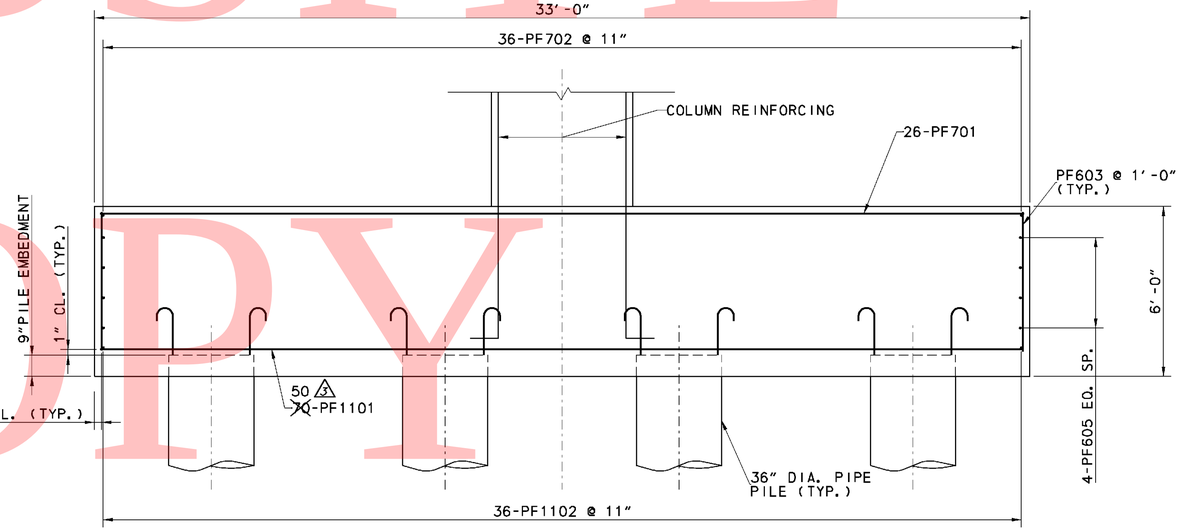

SECTION B-B

SCALE: ⅜"=1'-0"

UNOFFICAL WEBSITE COPY

DELAWARE DEPARTMENT OF TRANSPORTATION	ADDENDUMS / REVISIONS		SR1/I-95 INTERCHANGE	CONTRACT 28-090-03	BRIDGE NO. 1-268B	RAMP B OVER I-95NB PIER FOUNDATION DETAILS	S6-17
	ADDENDUM NO. ⚠2, UPDATED MAT REINFORCING PLAN TITLE, 01/26/11, DWD			COUNTY NEW CASTLE	DESIGNED BY: RMB		SHEET NO. 464
	ADDENDUM NO. ⚠3, CORRECTED REBAR CALLOUTS, 02/18/11, DWD				CHECKED BY: DWD		TOTAL SHTS. 803

2/16/2011 5:22:04 PM
M:\PROJECTS\2003\03059_DELTRNPK\SR1_MALL\PHASE II\CONSTRUCTION SERVICES\ADDENDUM 3\CADD WORKING DRAWINGS\FT04_BR-S6_SR1.DGN

PILE INSTALLATION DATA

SUBSTRUCTURE UNIT	DESIGN DATA: PILE SIZE (INCHES)	PILE THICKNESS (Inches)	NOMINAL DRIVING RESISTANCE (KIPS)	ESTIMATED PILE TIP ELEVATION	MINIMUM PILE TIP ELEVATION	ACTUAL FIELD DATA: AVERAGE ACTUAL MINIMUM TIP ELEVATION	AVERAGE ACTUAL MAXIMUM TIP ELEVATION
ABUTMENT A	24	0.50	382	+10	+15		
PIER 1	36	0.625	758	+12	+13		
PIER 2 N	36	0.625	435	+34	+36		
PIER 2 S	36	0.625	435	+34	+35		
PIER 3	36	0.625	758	+9	+12		
ABUTMENT B	24	0.50	382	+10	+15		

ABUTMENT A PILE DRIVING INFORMATION
PILE SIZE AND TYPE:
ACTUAL BEARING OBTAINED:
HAMMER TYPE:
PILE HAMMER ENERGY:
SPECIAL DRIVING CONDITIONS AND COMMENTS:

PIER 1 PILE DRIVING INFORMATION
PILE SIZE AND TYPE:
ACTUAL BEARING OBTAINED:
HAMMER TYPE:
PILE HAMMER ENERGY:
SPECIAL DRIVING CONDITIONS AND COMMENTS:

PIER 2 N PILE DRIVING INFORMATION
PILE SIZE AND TYPE:
ACTUAL BEARING OBTAINED:
HAMMER TYPE:
PILE HAMMER ENERGY:
SPECIAL DRIVING CONDITIONS AND COMMENTS:

PIER 2 S PILE DRIVING INFORMATION
PILE SIZE AND TYPE:
ACTUAL BEARING OBTAINED:
HAMMER TYPE:
PILE HAMMER ENERGY:
SPECIAL DRIVING CONDITIONS AND COMMENTS:

PIER 3 PILE DRIVING INFORMATION
PILE SIZE AND TYPE:
ACTUAL BEARING OBTAINED:
HAMMER TYPE:
PILE HAMMER ENERGY:
SPECIAL DRIVING CONDITIONS AND COMMENTS:

ABUTMENT B PILE DRIVING INFORMATION
PILE SIZE AND TYPE:
ACTUAL BEARING OBTAINED:
HAMMER TYPE:
PILE HAMMER ENERGY:
SPECIAL DRIVING CONDITIONS AND COMMENTS:

1. THE ABUTMENT PILES INCLUDE AN ESTIMATED 35-FT STICKUP FOR THE MSE WALL.

CROSS REFERENCE NOTES:

1. FOR PIER REINFORCEMENT SCHEDULE, SEE DWG. S6-30.
2. FOR ABUTMENT REINFORCMENT SCHEDULE, SEE DWG. S6-15.

PILE INSTALLATION NOTES:

1. ALL PILES SHALL BE PIPE PILES (ASTM A 252), GRADE ~~50~~ 3. PILES SHALL NOT BE COATED ~~OR CASED~~. 2 ABUTMENT PILES SHALL BE CASED.
2. ALL PILES SHALL BE DRIVEN TO THE NOMINAL PILE DRIVING RESISTANCE (Rndr) LISTED IN THE PILE INSTALLATION DATA TABLE.
3. THE CONTRACTOR SHALL BE RESPONSIBLE FOR SUBMITTING A WAVE EQUATION ANALYSIS AND ALL OTHER INCIDENTALS IN ACCORDANCE WITH THE PROJECT SPECIFICATIONS. THE WAVE EQUATION AND HIGH-STRAIN DYNAMIC PILE TESTING MUST BE SIGNED AND STAMPED BY A PROFESSIONAL ENGINEER LISENCED IN THE STATE OF DELAWARE IN ACCORDANCE WITH THE PROJECT SPECIFICATIONS.
4. UPON COMPLETION OF THE HIGH-STRAIN DYNAMIC PILE TESTING THE CONTRACTOR SHALLSUBMIT A CAPWAP ANALYSIS OR OTHER SIMILAR APPROVED SIGNAL MATCHING TECHNIQUE TO THE ENGINEER FOR REVIEW AND APPROVAL IN ACCORDANCE WITH THE PROJECT SPECIFICATIONS.
5. A QUARANTINE PERIOD OF ~~APPROXIMATELY~~ 60 DAYS IS REQUIRED AFTER THE CONSTRUCTION OF THE FULL HEIGHT OF THE FILL AT THE ABUTMENTS IS ACHIEVED. THE ENGINEER SHALL APPROVE THE COMPLETION OF THE WAITING PERIOD, BASED ON RESULTS OF INSTRUMENTATION.
6. PILES MAY NOT BE DRIVEN UNTIL AFTER THE COMPLETION OF THE 60 DAY QUARANTINE PERIOD.
7. SEE THE SPECIAL PROVISIONS FOR SETTLEMENT MONITORING LOCATIONS AND REQUIREMENTS.

8. PILE LENGTHS FOR ORDERING PURPOSES SHALL BE DETERMINED BY TEST PILES. A MINIMUM OF ONE PILE PER SUBSTRUCTURE, AS SHOWN ON THE PLANS, SHALL BE DYNAMICALLY TESTED BY THE CONTRACTOR IN ACCORDANCE WITH SPECIAL PROVISIONS 619519. TEST AND PRODUCTION PILE RE-STRIKES WILL BE PAID AS FOLLOWS:

A). ALL TEST PILE(S) WILL BE RESTRUCK AND DYNAMICALLY TESTED BY THE CONTRACTOR. THE TEST PILE RESTRIKES SHALL BE INCIDENTAL TO ITEM NO. 619519 DYNAMIC PILE TESTING BY CONTRACTOR PROVIDE THAT THEY ARE PERFORMED WITHIN FIVE CALANDAR DAYS FROM INITIAL DRIVE.

B). AN ADDITIONAL PAYMENT WILL BE MADE TO THE CONTRACTOR IF HE IS DIRECTED BY THE ENGINEER TO WAIT AND RESTRIKE THE TEST PILE MORE THAT FIVE CALENDAR DAYS AFTER INITIAL DRIVE. THE CONTRACTOR SHALL BE COMPENSATED AT THE FIXED PRICE OF $1,000.00 PER CALENDAR DAY FOR EVERY DAY, AFTER THE FIFTH CALENDAR DAY, UNDER ITEM NO. 619502 TEST PILE RESTRIKE. MULTIPLE TEST PILE RESTRIKES OCCURRING ON THE SAME DAY WILL ONLY BE PAID FOR AS ONE CALENDAR DAY. NO ADDITIONAL COMPENSATION WILL BE MADE REGARDLESS OF THE NUMBER OF TEST PILE RESTRIKES PERFORMED THAT DAY.

C). RESTRIKES ON PRODUCTION PILES WHICH ARE DESIGNATED TO BE DYNAMICALLY TESTED WILL NO BE PAID UNDER ITEM NO. 619501 PRODUCTION PILE RESTRIKE. THESE PRODUCTION PILE RESTRIKES ARE INCIDENTAL TO ITEM NO. 61519 DYNAMIC PILE TESTING BY CONTRACTOR.

2 ~~D). THE FIRST 12 PRODUCTION PILE RESTRIKES FOR THE WALL BRIDGE SHALL BE PERFORMED AT NO COST TO THE DEPARTMENT SUBSEQUENT RESTRIKES SHALL BE UNDER ITEM NO. 619501 PRODUCTION PILE RESTRIKES AT THE FIXED PRICE OF $500.00 EACH.~~

THE DEPARTMENT RESERVE THE RIGHT TO PERFORM DYNAMIC TESTING OF RESTRIKES.

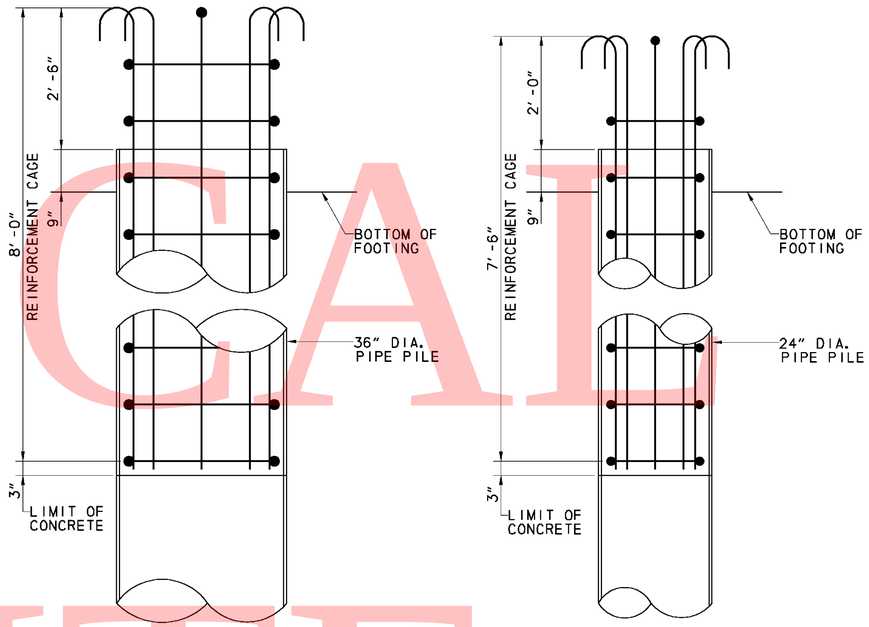

ELEVATION A & B

SCALE: 3/4"=1'-0"

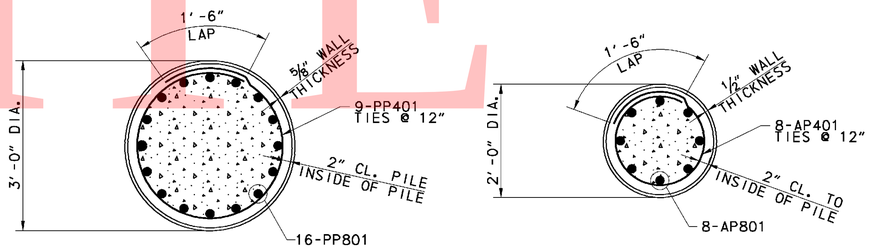

SECTION A & B

SCALE: 3/4"=1'-0"

UNOFFICIAL WEBSITE COPY

M:\PROJECTS\2003\03059_DELTRNPK\SR1_MALL\CADD\2809003\PLANS.DGV\PL01_BR-S6.SR1.DGN

2/23/2011 1:28:06 PM

DELAWARE DEPARTMENT OF TRANSPORTATION

ADDENDUMS / REVISIONS	
ADDENDUM NO. 2, MODIFIED NOTES, 01/26/11,	
DWD	
ADDENDUM NO. 3, MODIFIED NOTES, 02/18/11,	
DWD	

SR1/I-95 INTERCHANGE

CONTRACT	BRIDGE NO.	1-268B
28-090-03	DESIGNED BY:	DWD
COUNTY	CHECKED BY:	
NEW CASTLE		

RAMP B OVER I-95NB

PILE DETAILS

S6-18	
SHEET NO.	465
TOTAL SHTS.	803

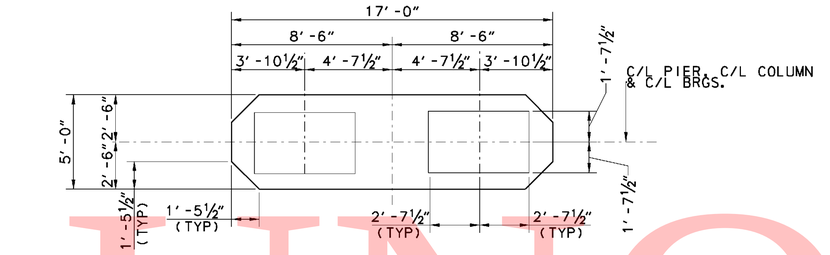

PLAN

SCALE: ¼″=1′ -0″

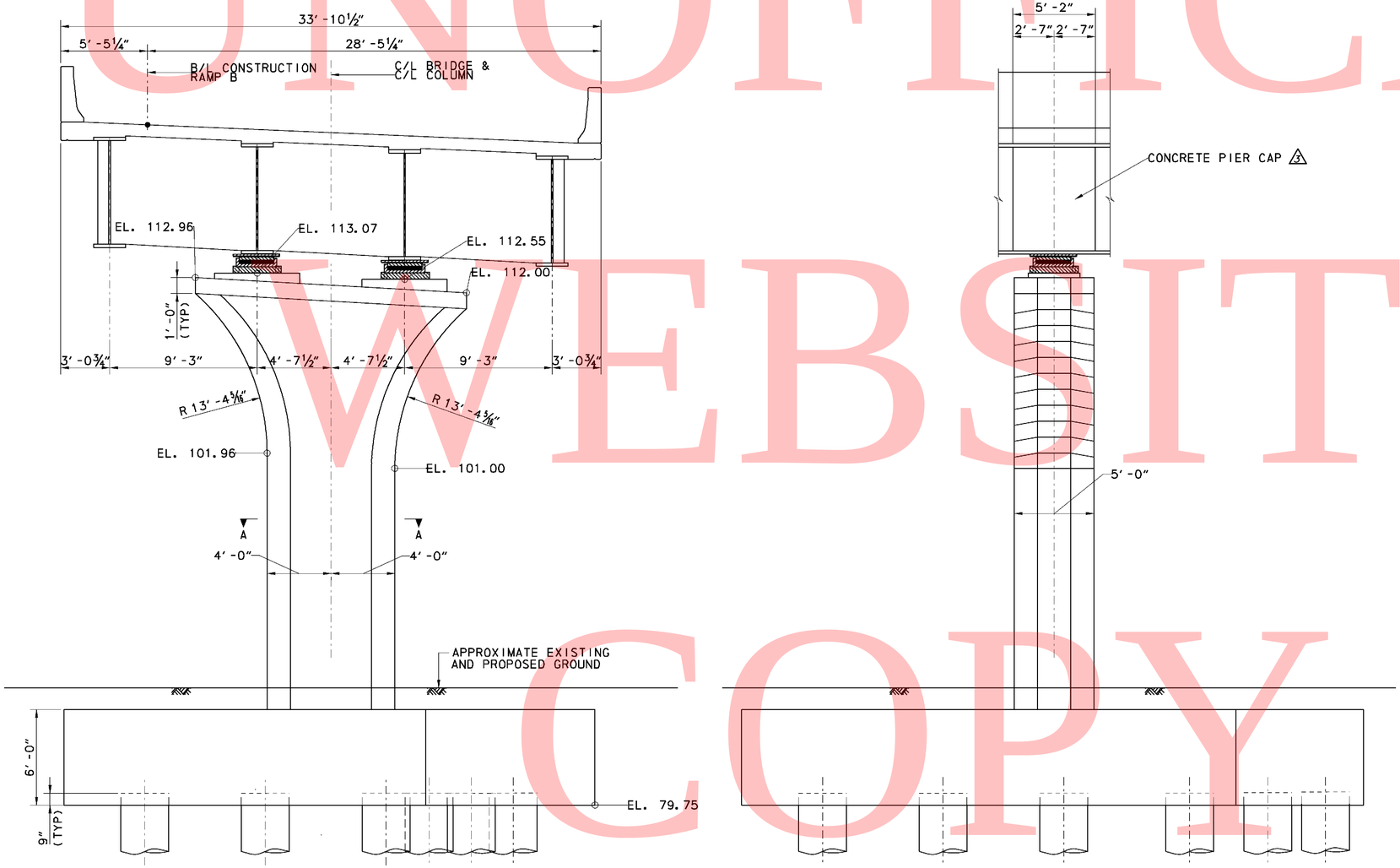

ELEVATION-PIER 1

SCALE: ¼″=1′ -0″

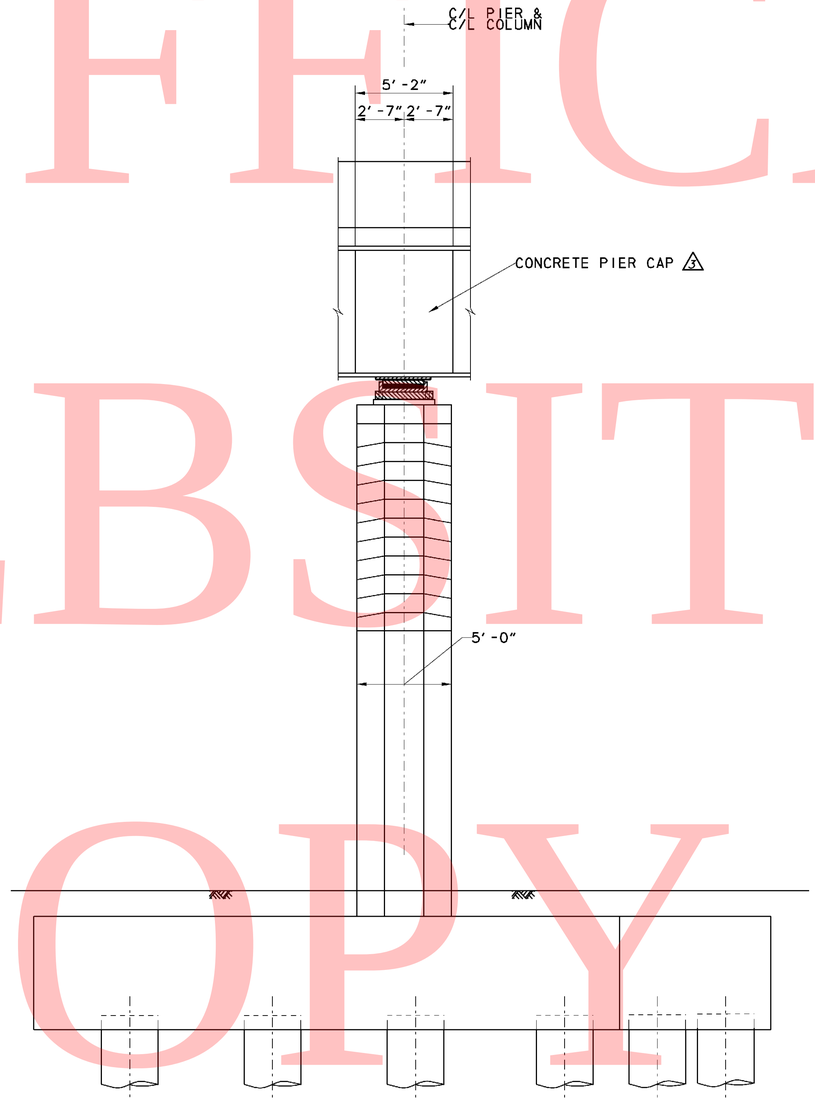

END VIEW

SCALE: ¼″=1′ -0″

CROSS REFERENCE NOTES:

1. FOR BRIDGE PLAN AND ELEVATION, SEE DWG. S6-1.
2. FOR PIER FOUNDATION PLAN, SEE DWG. S6-16.
3. FOR INTEGRAL PIER CAP, REINFORCEMENT DETAILS, SEE DWG. S6-28 & S6-29.
4. FOR PIER FOOTING AND COLUMN REINFORCEMENT DETAILS, SEE DWG. S6-17 & S6-20.

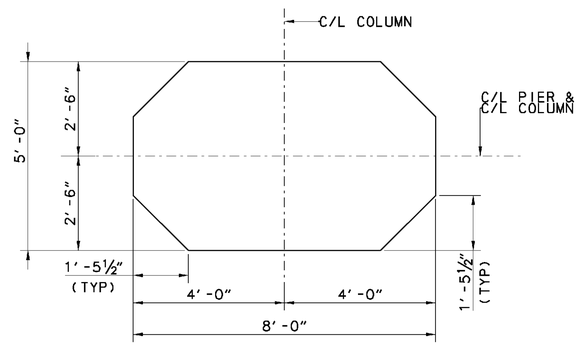

SECTION A-A

SCALE: ¼″=1′ -0″

UNOFFICAL WEBSITE COPY

2/16/2011 5:26:27 PM
M:\PROJECTS\2003\03059_DELTRNPK\SR1-MALL\CADD\2809003\PLANS.DGV\PR01_BR-S6_SR1.DGN

DELAWARE DEPARTMENT OF TRANSPORTATION	ADDENDUMS / REVISIONS ADDENDUM NO. 3, ADDED CALLOUT, 02/18/11, DWD		SR1 / I-95 INTERCHANGE	CONTRACT 28-090-03 COUNTY NEW CASTLE	BRIDGE NO. 1-268B DESIGNED BY: RMB CHECKED BY: DWD	RAMP B OVER I-95NB PIER 1 PLAN AND ELEVATION	S6-19 SHEET NO. 466 TOTAL SHTS. 803

UNOFFICIAL WEBSITE COPY

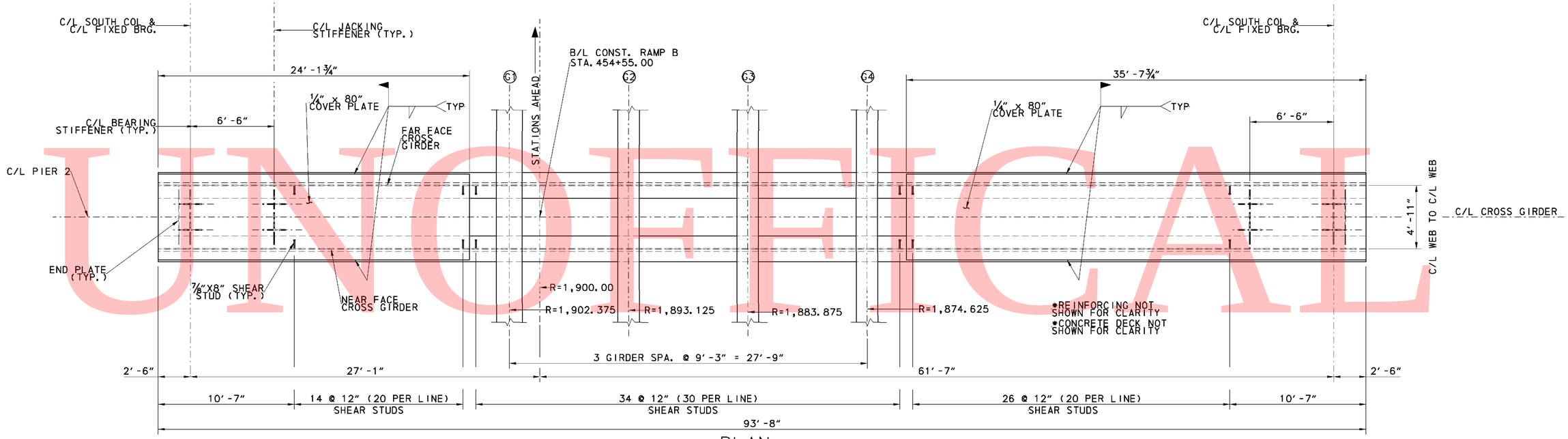

PLAN

SCALE: ¼" = 1'-0"

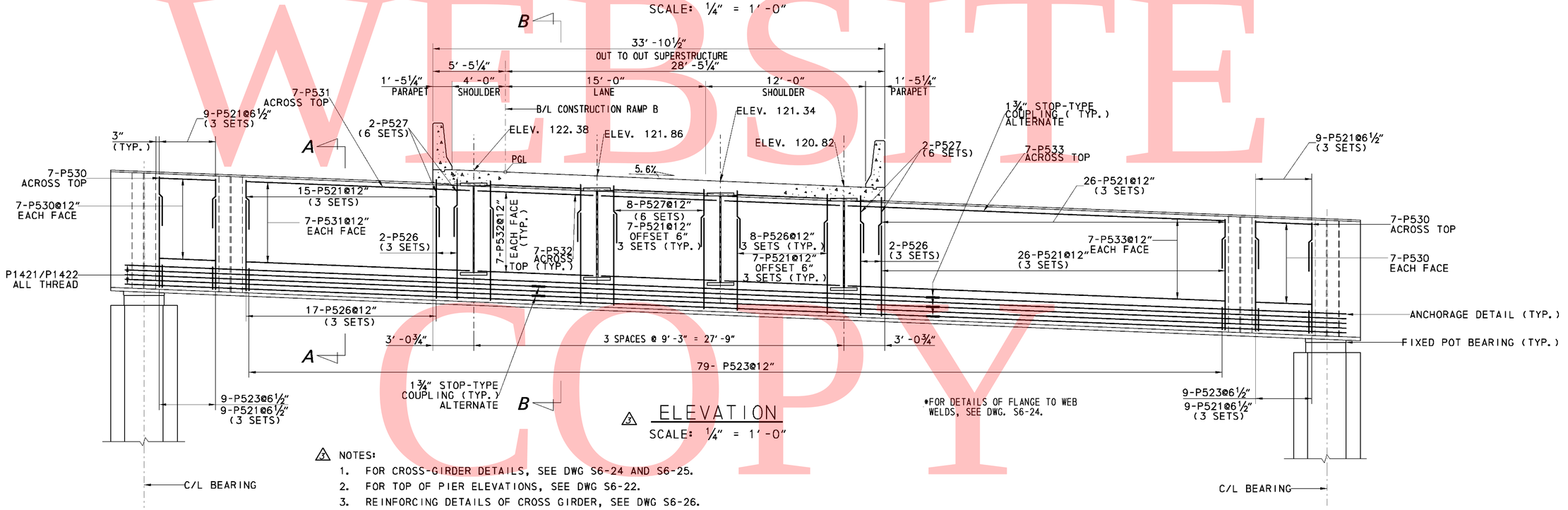

*FOR DETAILS OF FLANGE TO WEB WELDS, SEE DWG. S6-24.

ELEVATION

SCALE: ¼" = 1'-0"

NOTES:

1. FOR CROSS-GIRDER DETAILS, SEE DWG S6-24 AND S6-25.
2. FOR TOP OF PIER ELEVATIONS, SEE DWG S6-22.
3. REINFORCING DETAILS OF CROSS GIRDER, SEE DWG S6-26.
4. REFER TO SHEET S6-25 FOR SHEAR STUD DETAILS.
5. SHIP CROSS GIRDER WITH CROSS GIRDER DIAPHRAGMS, STIFFENERS AND END PLATES INSTALLED.
6. FOR SECTIONS A-A AND B-B, SEE DWG S6-25.
7. TOP OF SLAB ELEVATIONS SHOWN ARE AT THE CENTERLINE OF THE CROSS GIRDER.

2/22/2011 2:37:46 PM
M:\PROJECTS\2003\03059_DELTRNPK\SR1_MALL\CADD\2809003\PLANS.DGN\PR05_BR-S6_SR1.DGN

DELAWARE DEPARTMENT OF TRANSPORTATION

ADDENDUMS / REVISIONS
ADDENDUM NO. 3, CROSS GIRDER PLAN,
CROSS GIRDER ELEVATION, 02/18/11, DWD

SR1 / I-95 INTERCHANGE

CONTRACT	BRIDGE NO.	1-268B
28-090-03	DESIGNED BY:	DWD
COUNTY	CHECKED BY:	
NEW CASTLE		

RAMP B OVER I-95NB

CROSS GIRDER DETAILS 1

S6-23
SHEET NO. 470
TOTAL SHTS. 803

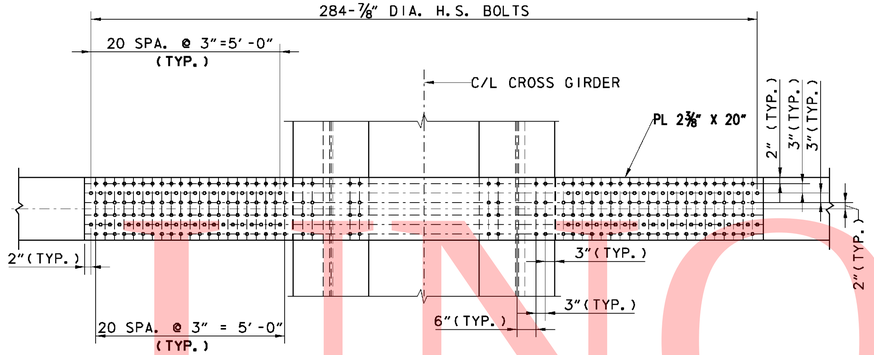

TOP FLANGE SPLICE PLATE

SCALE: ½"=1'-0"
(GIRDERS G2, G3 & G4)

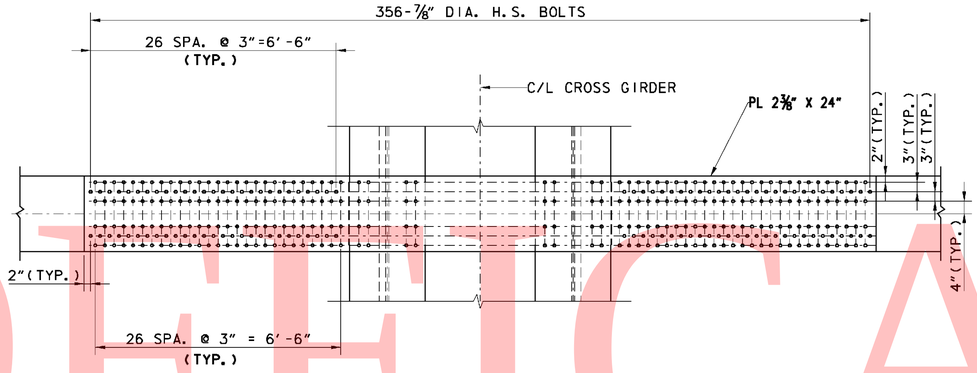

TOP FLANGE SPLICE PLATE

SCALE: ½"=1'-0"
(GIRDER G1)

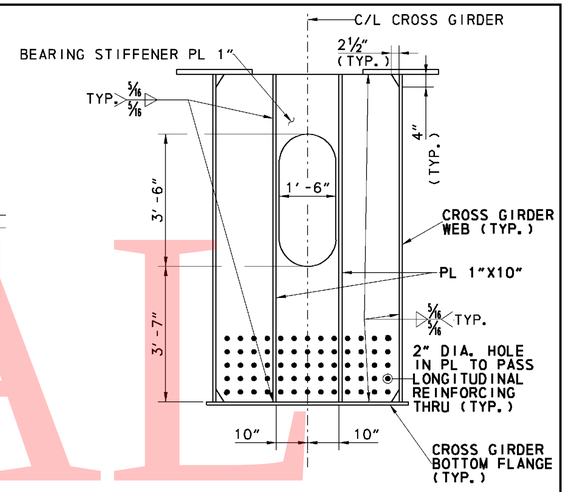

3 BEARING STIFFENER & JACKING STIFFENER

SCALE: ½"=1'-0"

PL 2 3/8"X20"X17'-11½" (G2,G3,G4)
PL 2 3/8"X24"X20'-11½" (G1)

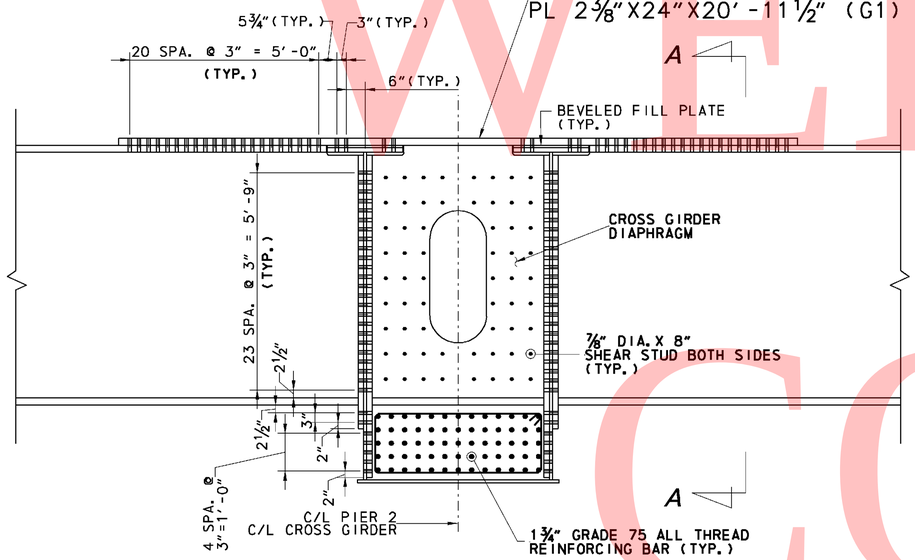

STIRRUPS NOT SHOWN FOR CLARITY

3 CROSS GIRDER CONNECTION

SCALE: ½"=1'-0"
(G2, G3, G4 SHOWN, G1 SIMILAR)

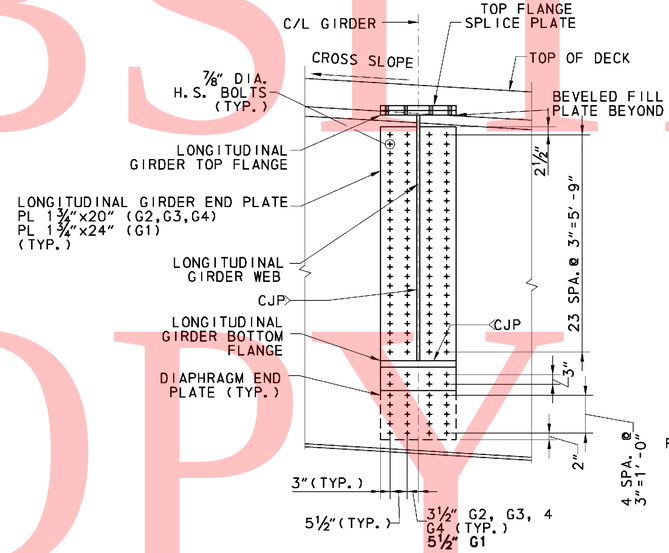

3 SECTION A-A

SCALE: ½"=1'-0"

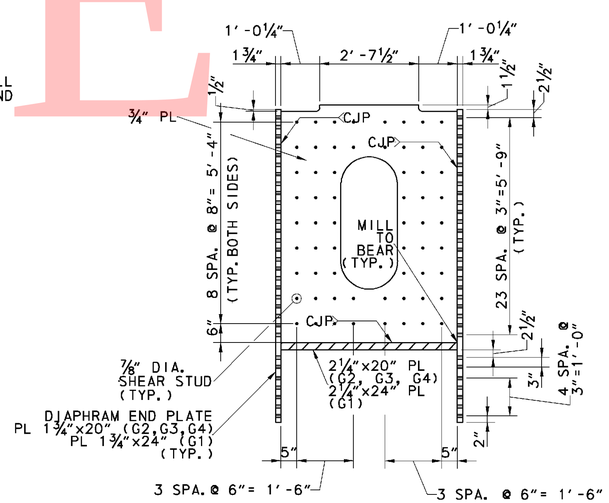

3 CROSS GIRDER DIAPHRAM

SCALE: ½"=1'-0"

UNOFFICIAL WEBSITE COPY

2/23/2011 9:20:42 AM
M:\PROJECTS\2003\03059.DELTRNPK\SR1_MALL\CADD\2809003\PLANS.DGV\PR06_BR-S6_SR1.DGN

DELAWARE DEPARTMENT OF TRANSPORTATION	ADDENDUMS / REVISIONS		SR1 / I-95 INTERCHANGE	CONTRACT 28-090-03	BRIDGE NO. 1-268B	RAMP B OVER I-95NB CROSS GIRDER DETAILS 2	S6-24
	ADDENDUM NO. 3, CONNECTION, DIAPHRAGM AND STIFFENER DETAILS, SECTION A-A, 02/18/11, DWD			COUNTY NEW CASTLE	DESIGNED BY: DWD		SHEET NO. 471
					CHECKED BY:		TOTAL SHTS. 803

CROSS GIRDER CONSTRUCTION SEQUENCE:

1. ERECT CROSS GIRDER AND PROVIDE TEMPORARY CONNECTION TO PIERS 2N & 2S.
3 2. ERECT LONGITUDINAL GIRDERS AND CONNECT TO CROSS GIRDER. TOP FLANGE SPLICE PLATES AND END PLATE, CROSS GIRDER DIAGRAM SHALL BE FULLY CONNECTED PRIOR TO ANY CONCRETE POUR. REMOVE TEMPORARY CONNECTION TO PIERS 2N AND 2S.
3. PLACE CONCRETE IN CROSS GIRDER TO TOP FLANGE OF CROSS GIRDER. CONCRETE SHALL ATTAIN 80% OF THE 28 DAY STRENGTH PRIOR TO PLACING DECK CONCRETE. AFTER 28 DAY STRENGTH IS ATTAINED, CROSS GIRDER IS ACTING FULLY COMPOSITE.
4. PLACE CONCRETE DECK ACCORDING TO DECK POUR SEQUENCE AS SHOWN ON DWG. S6-42, 43, 44 & 45.
5. PLACE CONCRETE PARAPET ACCORDING TO DELDOT STD SPECIFICATIONS.
6. CROSS GIRDER COVER PLATE SHALL BE PLACED UPON COMPLETION OF CONCRETE PARAPET PLACEMENT. THE COVER PLATE IS NOT CONSIDERED A STRUCTURAL MEMBER AND IS NOT INCLUDED IN THE SECTION PROPERTIES OF THE CROSS GIRDER.
3 7. REFER TO DELDOT STANRD SPECIFICATIONS SECTION 602 AND 605 FOR REQUIRED SUBMISSIONS PRIOR TO CROSS GIRDER ERECTION AND CONCRETE PLACEMENT.

3 CROSS GIRDER NOTES:

1. REINFORCING STEEL MAY BE PLACED AT PLANT.
2. ALL BOLTS IN THE CROSS GIRDER AND CONNECTIONS OF THE LONGITUDINAL GIRDERS SHALL 7/8" DIA. A325.
3. SHEAR STUDS INSIDE CROSS GIRDER SHALL NOT BE FIELD WELDED.
4. OVERSIZED OR SLOTTED HOLES WILL NOT BE PERMITTED.
5. THE LENGTH SHOWN FOR WEB PLATE, TOP AND BOTTOM FLANGE PLATES ARE HORIZONTAL DIMENSIONS.
6. FOR PIER COLUMN DETAILS SEE DWG S6-21 AND S6-22.
7. SEE DWG S6-57 FOR PROPOSED ERECTION SEQUENCE.
8. PROVIDE GRADE 75 ALL-THREAD REBAR-ASTM A615 FOR LONGITUDINAL REINFORCING IN CROSS GIRDER.
9. PROVIDE STOP-TYPE MECHANICAL COUPLERS ASTM A108 TO SPLICE LONGITUDINAL REINFORCING. MECHANICAL COUPLERS ARE INCIDENTAL TO ITEM 604000.
10. PROVIDE ANCHORAGE OF ALL-THREAD REBAR TO END PLATE. HEX NUTS SHALL MEET ASTM A108 SPECIFICATIONS. WASHERS SHALL MEET ASTM F436 SPECIFICATIONS. PVC CAPS SHALL BE PROVIDED OVER THE ANCHORAGE DETAIL. HEX NUTS, WASHERS AND PVC CAPS SHALL BE INCIDENTAL TO ITEM 604000.

3 CROSS GIRDER CAMBER

	C/L BRG PIER 2N	0.10L	0.20L	C/L G1 0.28L	C/L G2 0.38L	C/L G3 0.49L	C/L G4 0.59L	0.70L	0.80L	0.90L	C/L BRG PIER 2S
DLS	0	1/16	1/16	1/16	1/16	1/8	1/8	1/16	1/16	1/16	0
DLR	0	0	0	1/16	1/16	1/16	1/16	1/16	0	0	0
DLC	0	3/16	3/16	7/16	1/2	9/16	1/2	7/16	3/16	3/16	0
DLG1	0	1/16	1/16	1/16	1/8	1/8	1/16	1/16	1/16	0	0
DLG2	0	1/16	1/16	1/16	1/8	1/8	1/8	1/16	1/16	0	0
DLG3	0	1/16	1/16	1/16	1/8	1/8	1/8	1/16	1/16	1/16	0
DLG4	0	0	1/16	1/16	1/8	1/8	1/8	1/16	1/16	1/16	0
DLD	0	3/16	3/16	3/8	1/2	1/2	1/2	3/8	3/16	1/8	0
TDC	0	5/8	15/16	1 3/16	1 5/8	1 3/4	1 5/8	1 3/16	15/16	1/2	0

LEGEND

DLS - DENOTES DEFLECTION DUE TO CROSS GIRDER STEEL.
DLR - DENOTES DEFLECTION DUE TO CROSS GIRDER REINFORCING STEEL.
DLC - DENOTES DEFLECTION DUE TO CROSS GIRDER CONCRETE FILL.
DLG1 - DENOTES DEFLECTION DUE TO LONGITUDINAL GIRDER G1.
DLG2 - DENOTES DEFLECTION DUE TO LONGITUDINAL GIRDER G2.
DLG3 - DENOTES DEFLECTION DUE TO LONGITUDINAL GIRDER G3.
DLG4 - DENOTES DEFLECTION DUE TO LONGITUDINAL GIRDER G4.
DLD - DENOTES DEFLECTION DUE TO DECK SLAB BARRIER HAUNCH AND S.I.P. FORMS.
TDC - DENOTES DEFLECTION DUE TO TOTAL DEAD LOAD DEFLECTION AND CAMBER.

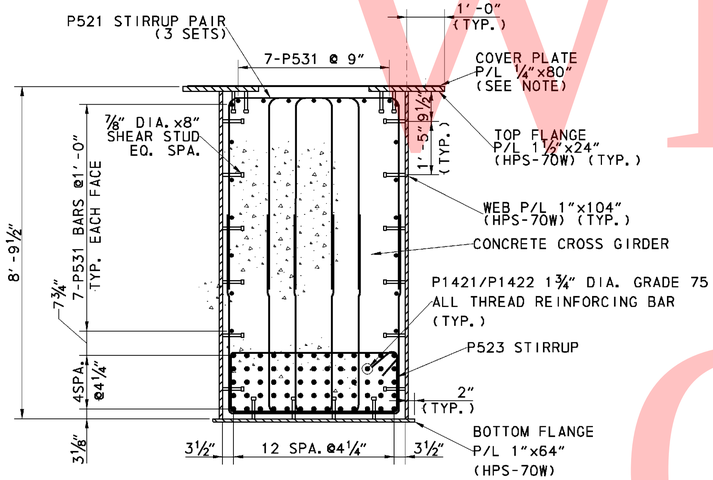

3 SECTION A-A
SCALE: 1/2"=1'-0"

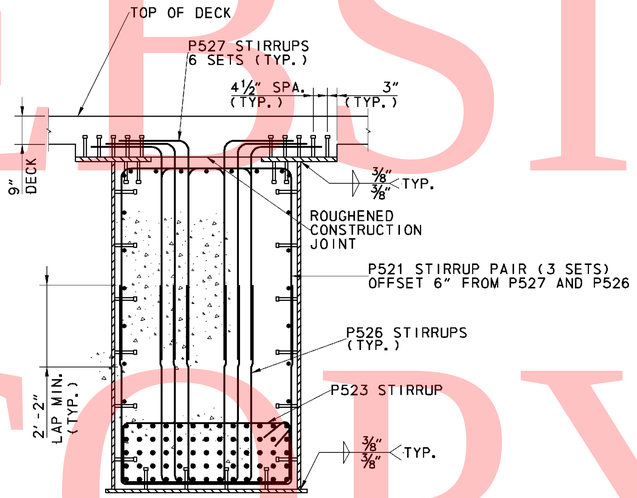

3 SECTION B-B
SCALE: 1/2"=1'-0"

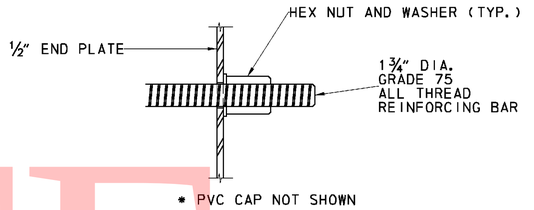

3 ANCHORAGE DETAIL
SCALE: 2"=1'-0"

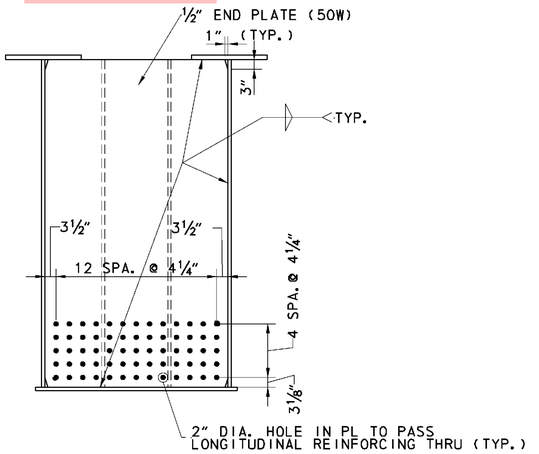

3 END PLATE SECTION
SCALE: 1/2"=1'-0"

UNOFFICIAL WEBSITE COPY

2/24/2011 8:03:12 AM
M:\PROJECTS\2003\03059_DELTRNPK\SR1_MALL\CADD\2809003\PLANS\DOV\PR07_BR-S6_SR1.DGN

DELAWARE DEPARTMENT OF TRANSPORTATION

ADDENDUMS / REVISIONS
ADDENDUM NO. 3, CAMBER TABLE, SECTION A-A & B-B, END PLATE DETAIL, ANCHORAGE DETAIL, NOTES, 02/18/11, DWD

SR1 / I-95 INTERCHANGE

CONTRACT 28-090-03
COUNTY NEW CASTLE
BRIDGE NO. 1-268B
DESIGNED BY: DWD
CHECKED BY:

RAMP B OVER I-95NB
CROSS GIRDER DETAILS 3

S6-25
SHEET NO. 472
TOTAL SHTS. 803

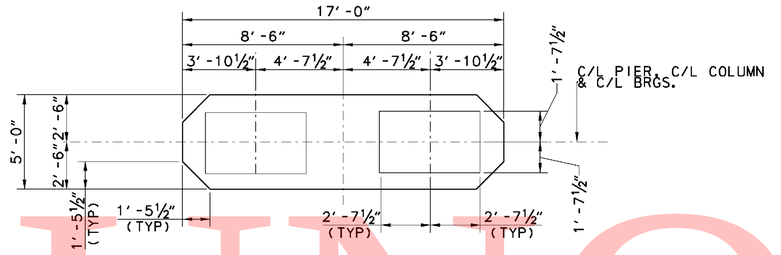

PLAN

SCALE: ¼″=1′ -0″

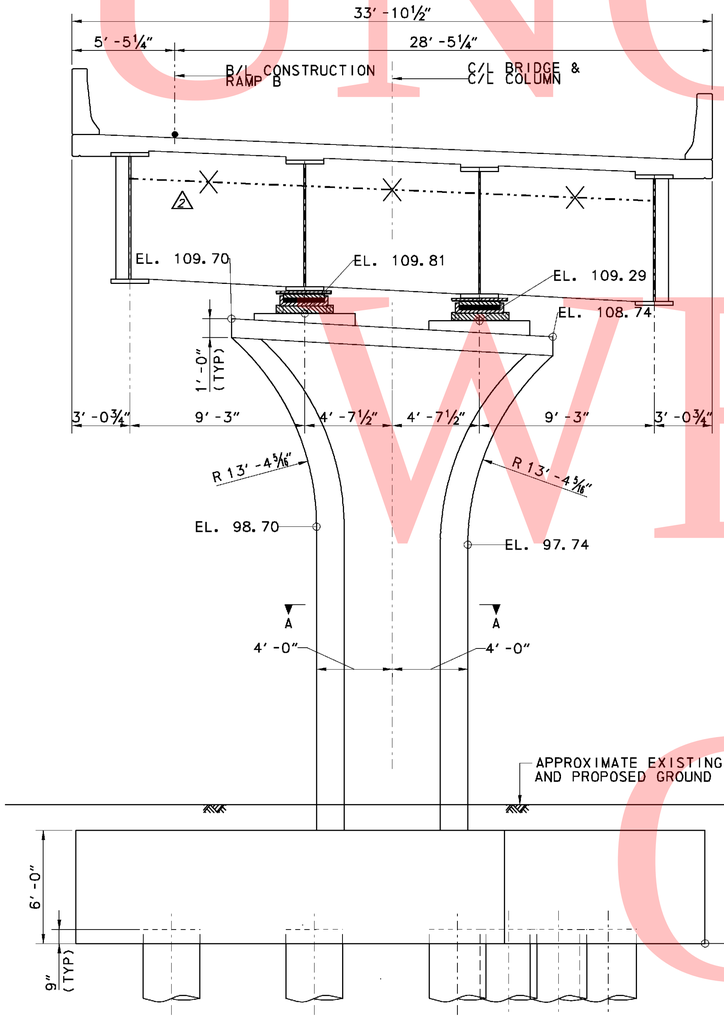

ELEVATION-PIER 3 Δ2

SCALE: ¼″=1′ -0″

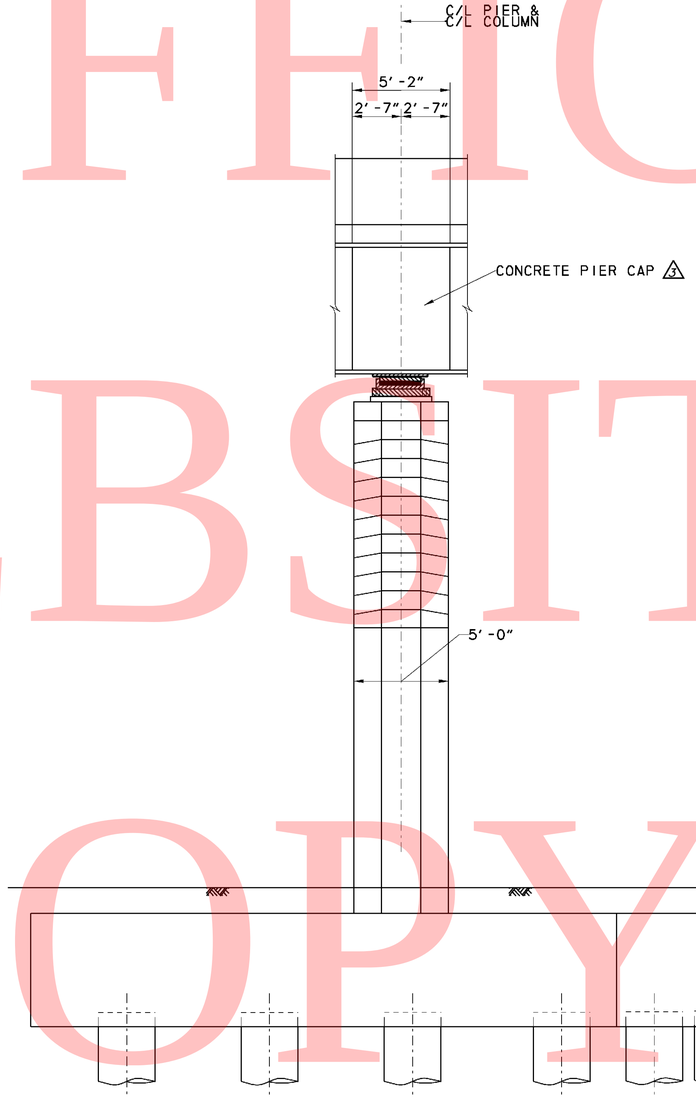

END VIEW

SCALE: ¼″=1′ -0″

CROSS REFERENCE NOTES:

1. FOR BRIDGE PLAN AND ELEVATION, SEE DWG. S6-1.
2. FOR PIER FOUNDATION PLAN, SEE DWG. S6-16.
3. FOR INTEGRAL PIER CAP, REINFORCEMENT DETAILS, SEE DWG. S6-28 & S6-29.
4. FOR PIER COLUMN AND FOOTING REINFORCEMENT DETAILS, SEE DWG. S6-27 & S6-17.

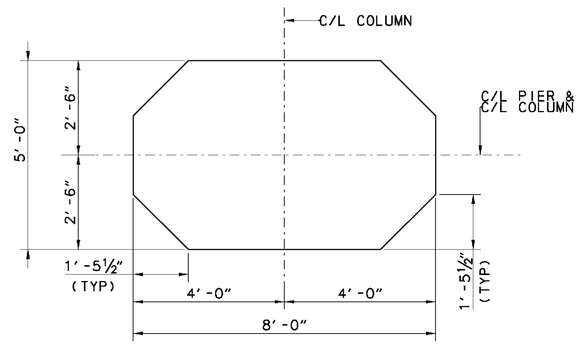

SECTION A-A

SCALE: ¼″=1′ -0″

UNOFFICAL WEBSITE COPY

2/16/2011 5:31:30 PM
M:\PROJECTS\2003\03059_DELTRNPK\SR1-MALL\CADD\2809003\PLANS.DGV\PR08_BR-S6_SR1.DGN

DELAWARE DEPARTMENT OF TRANSPORTATION

ADDENDUMS / REVISIONS	
ADDENDUM NO. Δ2 ,MODIFIED ELEVATION VIEW	
AND CORRECTED TITLE, 1/26/11, DWD	
ADDENDUM NO. Δ3 , ADDED CALLOUT, 02/18/11, DWD	

SR1 / I-95 INTERCHANGE

CONTRACT	28-090-03	BRIDGE NO.	1-268B
COUNTY	NEW CASTLE	DESIGNED BY:	RMB
		CHECKED BY:	DWD

RAMP B OVER I-95NB
PIER 3 PLAN AND ELEVATION

S6-26	
SHEET NO.	473
TOTAL SHTS.	803

UNOFFICIAL WEBSITE COPY

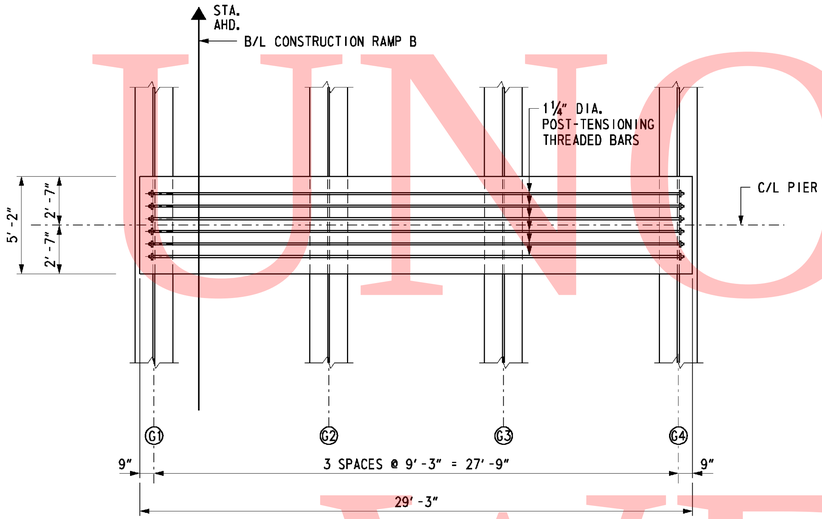

POST TENSIONING PLAN

SCALE: ¼" = 1'-0"

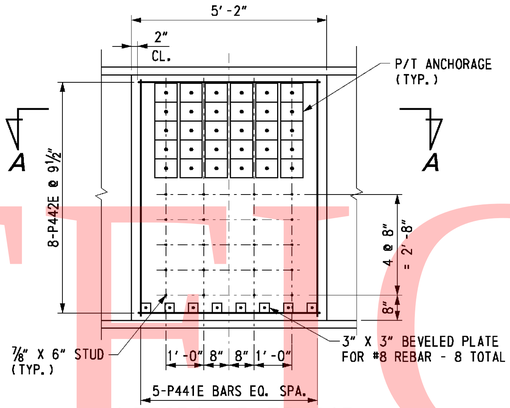

INTEGRAL PIER CAP ANCHORAGE COVER (G1 & G4) 3

SCALE: ½" = 1'-0"

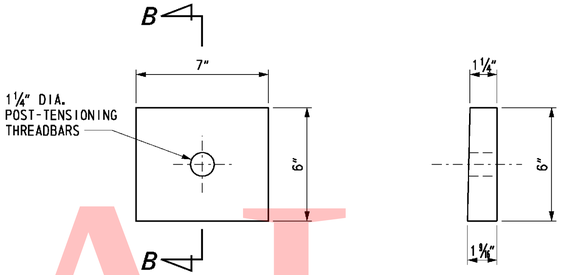

ANCHOR PLATE DETAIL

SCALE: 3" = 1'-0"

SECTION B-B

SCALE: 3" = 1'-0"

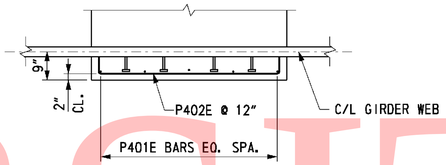

SECTION A-A

SCALE: ½" = 1'-0"

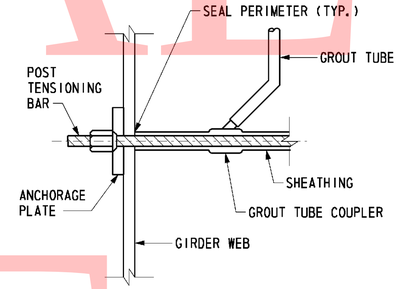

POST-TENSIONING ASSEMBLY DETAIL

NOT TO SCALE

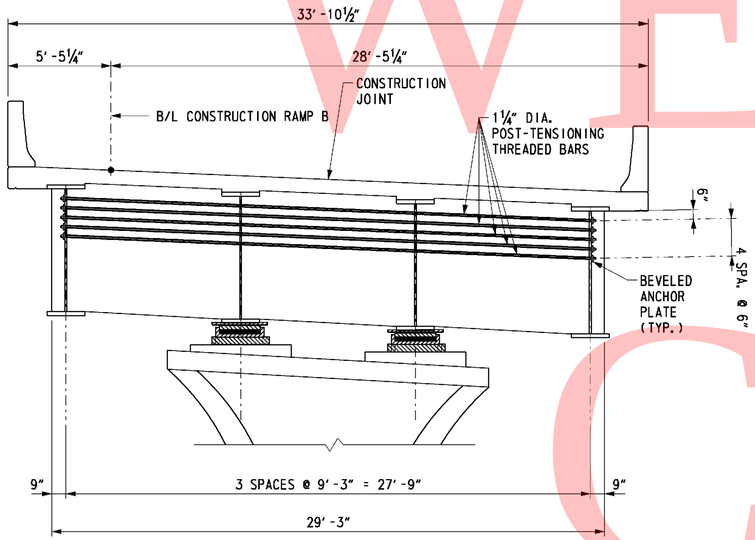

POST TENSIONING SECTION

SCALE: ¼" = 1'-0"

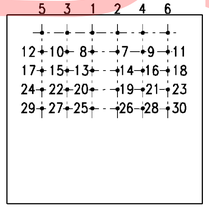

POST-TENSION STRESSING SEQUENCE

NOT TO SCALE

SEQUENCE OF CONSTRUCTION:

1. CONSTRUCT PIER FOUNDATION AND COLUMN.
2. AFTER THE FOUNDATION AND COLUMNS HAVE ATTAINED AT LEAST 80% OF THEIR DESIGN COMPRESSIVE STRENGTH, CONSTRUCT TEMPORARY SHORING TO SUPPORT SUPERSTRUCTURE GIRDERS. PIER CAP AND GIRDERS SHALL BE SUPPORTED ON TEMPORARY SHORING FRAMES UNTIL DECK SLAB AND PARAPETS HAVE BEEN CONSTRUCTED AND POST-TENSIONING OPERATIONS HAVE BEEN COMPLETED.
3. ERECT SUPERSTRUCTURE GIRDERS ON TEMPORARY SHORING.
4. POUR DECK IN POSITIVE MOMENT REGIONS AS SHOWN ON THE POURING SEQUENCE PLANS POUR NO.1. THIS WILL ALLOW THE GIRDERS TO DEFLECT DUE TO THE DECK WEIGHT WITHOUT ANY RESTRAINT AT THE INTEGRAL PIER LOCATIONS.
5. POUR CONCRETE FOR THE INTEGRAL PIER CAP.
6. POUR REMAINING DECK CONCRETE IN NEGATIVE MOMENT REGIONS AFTER PIER CAPS HAVE REACHED A MINIMUM COMPRESSIVE STRENGTH OF 4500 PSI.
7. CONSTUCT CONCRETE PARAPETS.
8. AFTER DECK CONCRETE HAS ATTAINED ITS 28 DAY COMPRESSIVE STRENGTH, POST-TENSIONING OPERATIONS MAY COMMENCE. BARS SHALL BE STRESSED FROM ONE END OF THE PIER CAP IN THE ORDER SHOWN. CONTRACTOR MAY PROPOSE AN ALTERNATE STRESSING SEQUENCE AND SUBMIT TO THE ENGINEER FOR APPROVAL.
9. DURING THE POST TENSIONING OPERATION, THE GIRDERS SHALL BE SHIMMED AS NECESSARY TO MAINTAIN FULL SUPPORT FROM THE TEMPORARY SHORING.
10. WHEN POST TENSIONING IS COMPLETE, DUCTS SHALL BE GROUTED.
11. CONSTRUCT CONCRETE END COVER AT ENDS OF PIER CAP.
12. REMOVE TEMPORARY SHORING.

NOTES:

1. MATERIAL PROPERTIES:

   CONCRETE CAP: f'c = 6000 psi
   f'ci = 4500 psi
   Ec = 4270 ksi

   PRESTRESSING STEEL:

   THREADBARS-ASTM A722, GRADE 150, TYPE II, 1¼" DIAMETER EPOXY COATED

MODULUS OF ELASTICITY:	29,700 ksi
JACKING STRESS:	110,000 psi
ANCHORING STRESS:	104,000 psi
WOBBLE COEFFICIENT:	0.0002
ANCHOR SET:	⅛"

CROSS REFERENCE NOTES:

1. FOR PIER 1 PLAN AND ELEVATION, SEE DWG. S6-19.
   FOR PIER 3 PLAN AND ELEVATION, SEE DWG. S6-26.
2. FOR PIER CAP REINFORCEMENT DETAILS, SEE DWG. S6-29.
3. FOR PIER 1 COLUMN REINFORCEMENT DETAILS, SEE DWG. S6-20.
   FOR PIER 3 COLUMN REINFORCEMENT DETAILS, SEE DWG. S6-22.
4. FOR PIER FOOTING REINFORCEMENT DETAILS, SEE DWG. S6-17.
5. FOR BRIDGE DECK POURING SEQUENCE, SEE DWG. S6-42, S6-43, S6-44 AND S6-45.

S6-28

DELAWARE
DEPARTMENT OF TRANSPORTATION

ADDENDUMS / REVISIONS	
ADDENDUM NO. 3, ANCHORAGE COVER NOTE, 02/18/11, DWD	

SR1 / I-95 INTERCHANGE

CONTRACT	BRIDGE NO.	1-268B
28-090-03	DESIGNED BY:	DWD
COUNTY	CHECKED BY:	
NEW CASTLE		

PIER CAP
POST-TENSIONING

SHEET NO.	475
TOTAL SHTS.	803

2/16/2011 5:31:41 PM
M:\PROJECTS\2003\03059_DELTRNPK\SR1_MALL\PHASE III CONSTRUCTION SERVICES\ADDENDUM 3\CADD WORKING DRAWINGS\PR10_BR-S6_SR1.DGN

M:\PROJECTS\2003\03059_DELTRNPK\SR1_WALL\PHASE III CONSTRUCTION SERVICES\ADDENDUM 3\CADD WORKING DRAWINGS\PR11_BR-S6_SR1.DGN
2/16/2011 5:32:19 PM

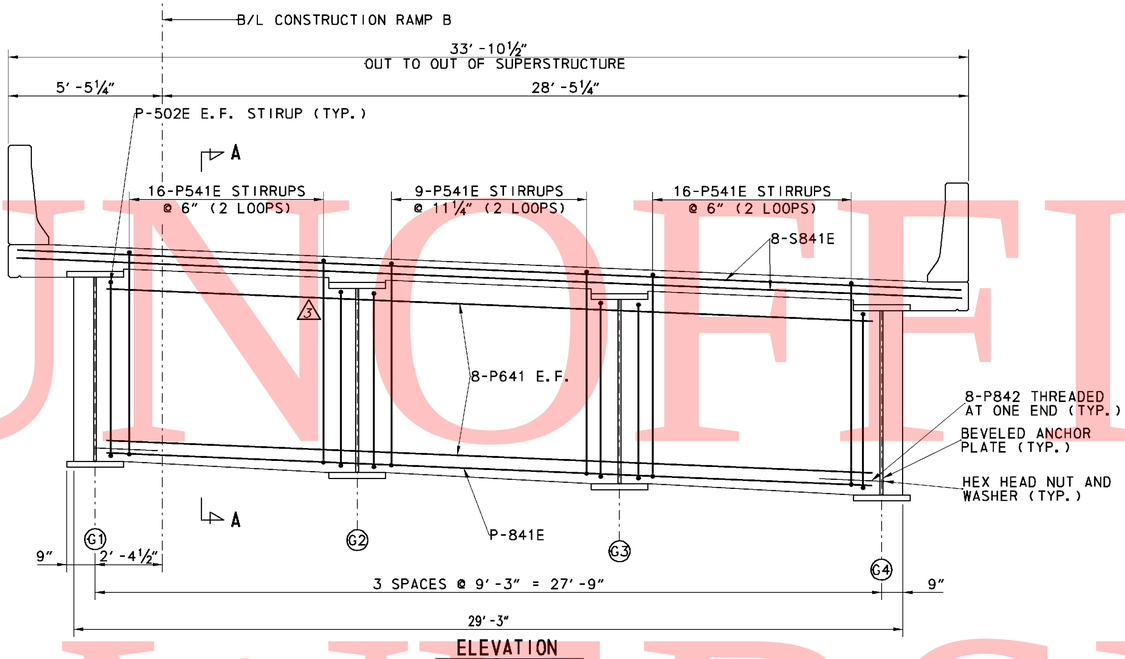

ELEVATION
SCALE: ⅜" = 1'-0"

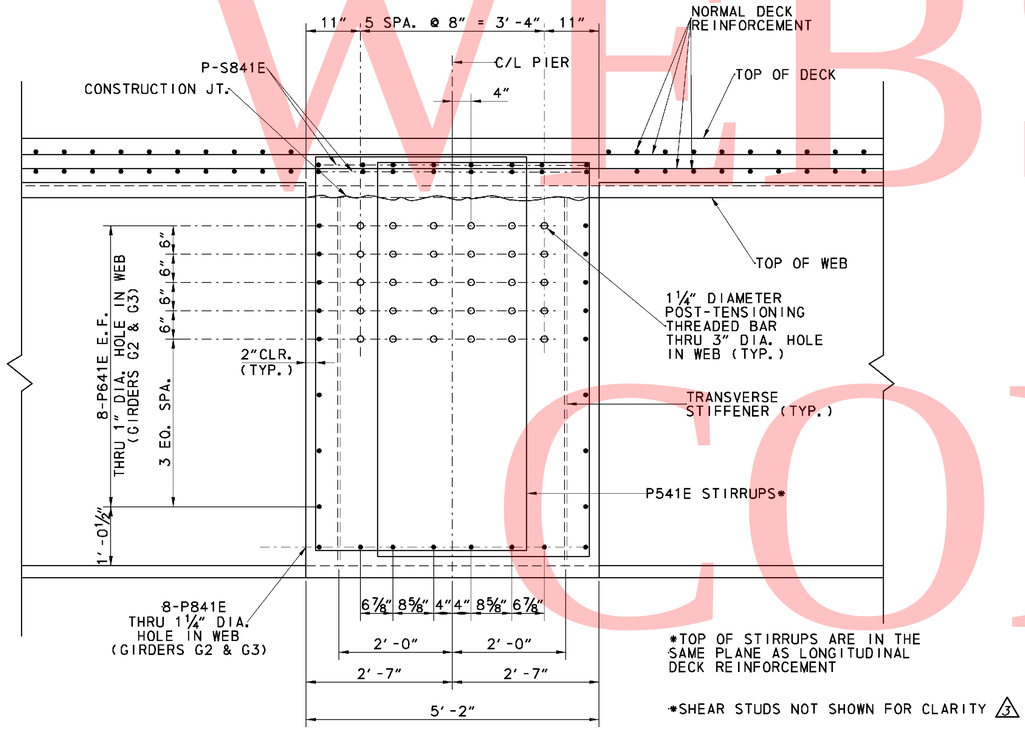

SECTION A-A
SCALE: ¾" = 1'-0"

*TOP OF STIRRUPS ARE IN THE SAME PLANE AS LONGITUDINAL DECK REINFORCEMENT

*SHEAR STUDS NOT SHOWN FOR CLARITY 3

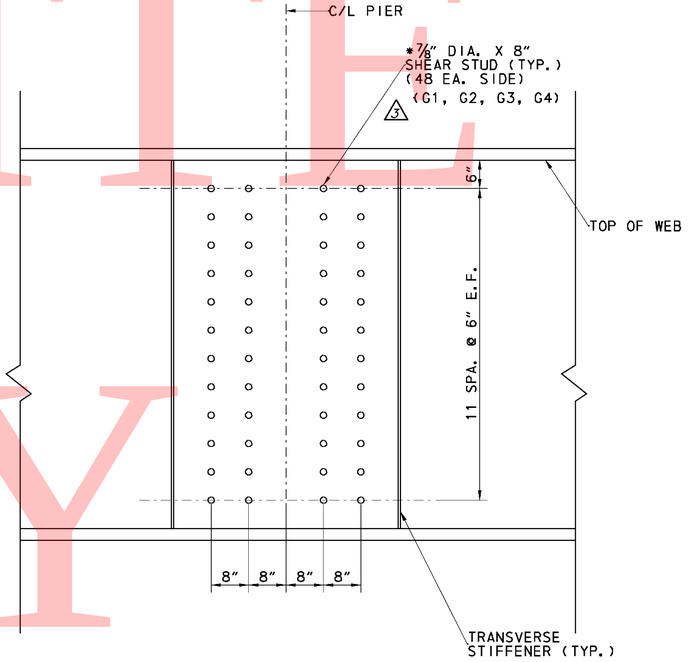

SHEAR STUDS
SCALE: ¾" = 1'-0"

*FOR SHEAR STUDS ON OUTSIDE OF GIRDERS G1 & G4, SEE ANCHORAGE COVER DETAIL ON POST-TENSIONING REINFORCEMENT SHEET.

CROSS REFERENCE NOTES:

1. FOR PIER 1 PLAN AND ELEVATION, SEE DWG S6-16
2. FOR PIER 3 PLAN AND ELEVATION, SEE DWG S6-26
3. FOR PIER CAP POST-TENSIONING REINFORCEMENT, SEE DWG S6-28.
4. FOR PIER 1 COLUMN REINFORCEMENT DETAILS, SEE DWG S6-20.
5. FOR PIER 3 COLUMN REINFORCEMENT DETAILS, SEE DWG S6-27.
4. FOR PIER FOOTING REINFORCEMENT DETAILS, SEE DWG S6-17.

UNOFFICIAL WEBSITE COPY

S6-29

DELAWARE DEPARTMENT OF TRANSPORTATION	ADDENDUMS / REVISIONS		SR1 / I-95 INTERCHANGE	CONTRACT 28-090-03	BRIDGE NO. 1-268B	RAMP B OVER I-95NB PIER CAP REINFORCEMENT	SHEET NO. 476
	ADDENDUM NO. 3, REBAR, SHEET TITLE, NOTES 02/18/11, DWD			COUNTY NEW CASTLE	DESIGNED BY:	3	TOTAL SHTS. 803
					CHECKED BY:		

REINFORCING BAR LIST

PIER 1

MARK	LENGTH	NO. BARS	TYPE	A	B	C	D	E	G	H	J	K	O	R	REMARKS
PF601	18'-3"	26	T3									2'-7"	4'-6½"		
PF602	5'-8"	26	T9	0'-8"	4'-0"				1'-0"	0'-4½"					
PF603	4'-11"	118	STR.												
PF604	32'-6"	8	STR.												
PF605	23'-6"	8	STR.												
PF701	32'-6"	26	STR.												
PF702	23'-6"	34	STR.												
PF811	26'-5"	72	36	1'-0"	25'-5"										
PF1101	32'-6"	50	STR.												
PF1102	23'-6"	36	STR.												
PP401	9'-7"	108	T3									1'-6"	2'-6¾"		
PP801	8'-11"	192	39	0'-11"	8'-0"						0'-11"				
P601	17'-2"	96	T3									1'-6"	4'-6½"		
P602	5'-8"	96	T9	0'-8"	4'-0"				1'-0"	0'-4½"					
P603	19'-8"	18	10	6'-3"	7'-2"	6'-3"								2'-3¼"	
P604	6'-2"	18	T9	0'-8"	4'-8"				1'-0"	0'-4½"					
P605	4'-8"	15	STR.												
P606	14'-8"	24	10	3'-9"	7'-2"	3'-9"								2'-3¼"	
P801	11'-4"	72	STR.												
P802	12'-1"	30	9S		11'-4"		0'-9"	0'-3¾"					11'-0"	13'-4¼"	
P803	2'-11"	4	STR.												
P804	3'-7"	4	STR.												
P805	4'-4"	4	STR.												
P806	5'-3"	4	STR.												
P807	6'-5"	4	STR.												
P808	8'-3"	4	STR.												
P809	6'-11"	4	STR.												
P8010	11'-3"	4	STR.												
P8011	3'-5"	4	STR.												
P8012	4'-3"	4	STR.												
P8013	5'-4"	4	STR.												
P8014	6'-4"	4	STR.												
P8015	7'-10"	4	STR.												
P8016	10'-10"	6	STR.												
P901	15'-5"	4	1	1'-0"	13'-5"				1'-0"		0'-6"				
P902	16'-7"	4	1	1'-0"	14'-7"				1'-0"		0'-6"				
P903	17'-9"	4	1	1'-0"	15'-9"				1'-0"		0'-6"				
P904	18'-2"	6	1	1'-0"	16'-2"				1'-0"		0'-6"				
P905	9'-5"	2	1	1'-0"	7'-5"				1'-0"		0'-6"				
P906	10'-7"	2	1	1'-0"	8'-7"				1'-0"		0'-6"				
P907	11'-9"	2	1	1'-0"	9'-9"				1'-0"		0'-6"				
P908	12'-2"	3	1	1'-0"	10'-2"				1'-0"		0'-6"				
P441E	6'-2"	10	STR.												
P442E	5'-7"	16	2	0'-4½"	4'-10"				0'-4½"						
P541E	22'-9"	82	11	0'-5½"	3'-8"	7'-3"	3'-8"	7'-3"	0'-5½"						
P542E	6'-10"	16	41	0'-5½"	5'-11"				0'-5½"	0'-3¾"					
P641E	27'-5"	8	STR.												
P841E	27'-5"	8	STR.												
P842	4'-6"	8	STR.												ALL THREAD BAR
S841E	33'-6½"	16	STR.												
P601E	4'-9"	18	2	1'-0"	2'-9"				1'-0"						
P602E	7'-0"	12	2	1'-0"	5'-0"				1'-0"						

PIER 2 (NORTH AND SOUTH)

MARK	LENGTH	NO. BARS	TYPE	A	B	C	D	E	G	H	J	K	O	R	REMARKS
PF601	18'-3"	26	T3									2'-7"	4'-6½"		
PF602	5'-8"	26	T9	0'-8"	4'-0"				1'-0"	0'-4½"					
PF603	4'-11"	118	STR.												
PF604	32'-6"	8	STR.												
PF605	23'-6"	8	STR.												
PF701	32'-6"	26	STR.												
PF702	23'-6"	34	STR.												
PF821	14'-4"	188	36	1'-0"	13'-4"										
PF1101	32'-6"	50	STR.												
PF1102	23'-6"	36	STR.												
PP401	9'-7"	108	T3									1'-6"	2'-6¾"		
PP801	8'-11"	192	39	0'-11"	8'-0"						0'-11"				
P601	17'-2"	128	T3									1'-6"	4'-6½"		
P602	5'-8"	128	T9	0'-8"	4'-0"				1'-0"	0'-4½"					
P822	25'-4"	188	STR.												
P823	20'-10"	188	STR.												
P521	11'-9"		17		4'-6"	2'-9"	4'-6"								
P522	13'-11"		17		6'-7"	2'-9"	6'-7"								
P523	13'-4"		12	0'-7"	4'-6"	1'-7"			0'-7"						
P524	60'-0"	21	STR.												
P525	34'-5"	21	STR.												
P526	13'-10"		17		5'-7"	1'-8"	5'-7"								
P527	4'-0"		46	1'-10"	5'-2"										
P1421	60'-0"	65	STR.												GRADE 75, ALL THREAD BAR
P1422	32'-7"	65	STR.												GRADE 75, ALL THREAD BAR
P601E	4'-9"	18	2	1'-0"	2'-9"				1'-0"						
P602E	7'-0"	12	2	1'-0"	5'-0"				1'-0"						
P521	13'-3"	480	17		5'-3"	2'-9"	5'-3"								
P523	13'-6"	97	12	0'-7"	4'-6"	1'-8"	4'-6"	1'-8"	0'-7"						
P526	13'-2"	84	17		5'-3"	1'-8"	5'-3"								
P527	4'-7"	168	2	1'-10"	5'-9"				0'-0"						
P530	6'-0"	42	STR.												
P531	23'-1¾"	21	STR.												
P532	8'-9"	63	STR.												
P533	29'-2¾"	21	STR.												
P1422	31'-8"	65	STR.												GRADE 75, ALL THREAD BAR

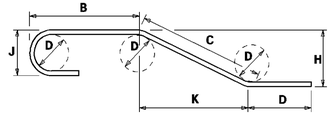

NOTES:

1. FIGURES SHOWN IN CIRCLES REPRESENT BAR BEND TYPES.
2. STANDARD BAR BENDS INCLUDE ONLY TYPES 1-32, S1-S12, AND T1-T16.
3. ALL DIMENSIONS ARE OUT-TO-OUT OF BAR EXCEPT "A" AND "G" ON STANDARD 180^ AND 135^ HOOKS.
4. "J" DIMENSIONS ON 180^ HOOKS TO BE SHOWN ONLY WHERE NECESSARY TO RESTRICT HOOK SIZE, OTHERWISE STANDARD HOOKS ARE TO BE USED.
5. WHERE "J" IS NOT SHOWN, "J" WILL BE KEPT EQUAL TO OR LESS THAN "H" ON TRUSS BARS. WHERE "J" CAN EXCEED "H", IT SHALL BE SHOWN.
6. "H" DIMENSIONS OF STIRRUPS TO BE SHOWN WHERE NECESSARY TO FIT WITHIN THE CONCRETE.
7. UNLESS OTHERWISE NOTED, DIAMETER "D" IS THE SAME FOR ALL BENDS AND HOOKS ON A BAR.
8. WHERE SLOPE DIFFERS FROM 45^ OFFSET, "H" AND "K" MUST BE SHOWN.
9. WHERE BARS ARE TO BE BENT MORE ACCURATELY THAN STANDARD BENDING TOLERANCES, BENDING DIMENSIONS WHICH REQUIRE CLOSER FABRICATION SHOULD HAVE LIMITS INDICATED.
10. FOR RECOMMENDED DIAMETER "D", OF BENDS, HOOKS, ETC., REFER TO TABLE AT RIGHT, 'CRSI' OR 'ACI' TABLES.
11. TYPE S1-S12, T1-T16 APPLY TO BAR SIZES 3 THROUGH 6.

ASTM STANDARD ENGLISH REINFORCING BARS				RECOMMENDED END HOOKS, APPLICABLE TO ALL GRADES				
	NOMINAL DIMENSIONS				180° HOOKS		90° HOOKS	
BAR SIZE	DIAMETER (inches)	AREA (inches²)	WEIGHT (lbs./ft.)	D	A OR G	J	A OR G	
3	0.375	0.110	0.376	2½"	5"	3"	6"	
4	0.500	0.200	0.668	3"	6"	4"	8"	
5	0.625	0.310	1.043	3½"	7"	5"	10"	
6	0.750	0.440	1.502	4½"	8"	6"	1'-0"	
7	0.875	0.600	2.044	5½"	10"	7"	1'-2"	
8	1.000	0.790	2.670	6"	11"	8"	1'-4"	
9	1.128	1.000	3.400	9½"	1'-3"	11½"	1'-7"	
10	1.270	1.270	4.303	10½"	1'-5"	1'-1½"	1'-10"	
11	1.410	1.560	5.313	1'-0"	1'-7"	1'-2½"	2'-0"	
14	1.693	2.250	7.650	1'-6½"	2'-3"	1'-9½"	2'-7"	
18	2.257	4.000	13.600	2'-0"	3'-0"	2'-4½"	3'-5"	

STANDARD BAR BENDS

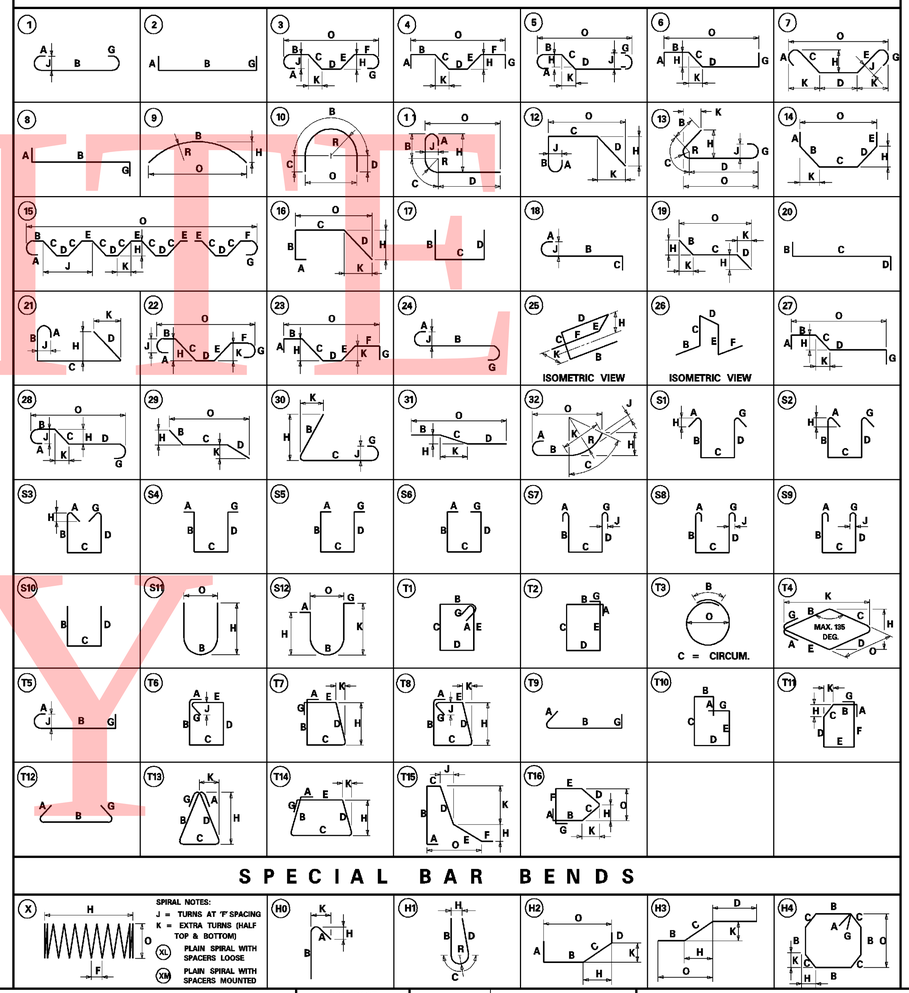

SPECIAL BAR BENDS

UNOFFICIAL WEBSITE COPY

2/22/2011 11:44:22 AM
M:\PROJECTS\2003\03059_DELTRPK\SR1_MALL\CADD\2809003\PLANS.DGV\BR02_BR-S6_SR1.DGN

DELAWARE
DEPARTMENT OF TRANSPORTATION

ADDENDUMS / REVISIONS	
ADDENDUM NO. 3, UPDATED BAR SCHEDULE,	
02/18/11, DWD	

SR1 / I-95 INTERCHANGE

CONTRACT	BRIDGE NO.	1-268B
28-090-03	DESIGNED BY:	
COUNTY	CHECKED BY:	
NEW CASTLE		

RAMP B OVER I-95NB

PIER REINFORCEMENT BAR SCHEDULE-1

S6-30	
SHEET NO.	477
TOTAL SHTS.	803

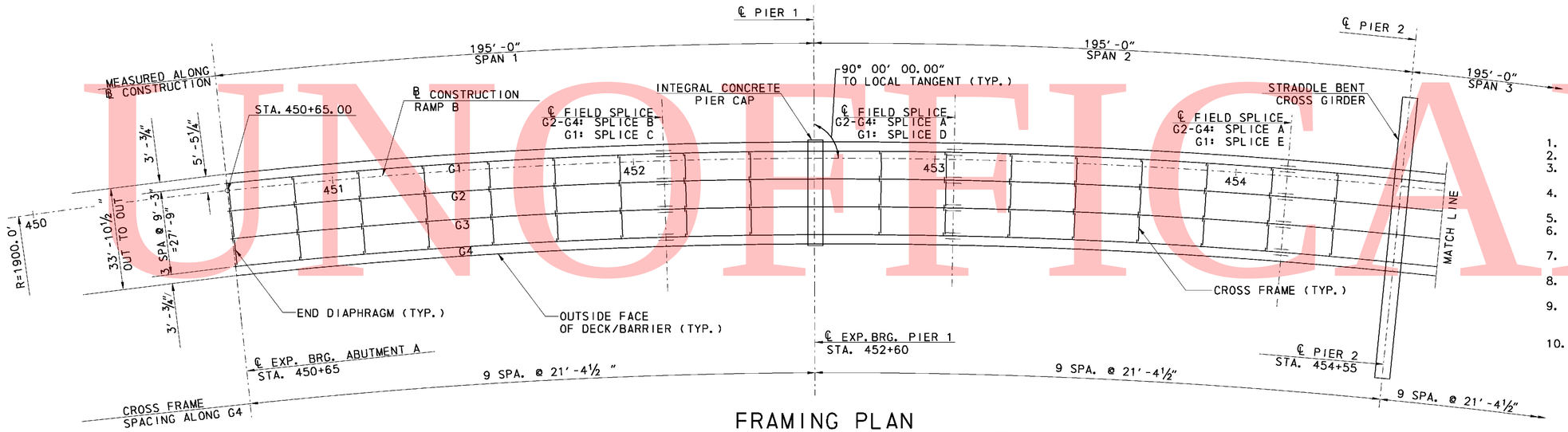

FRAMING PLAN

SCALE: 1″ = 20′-0″

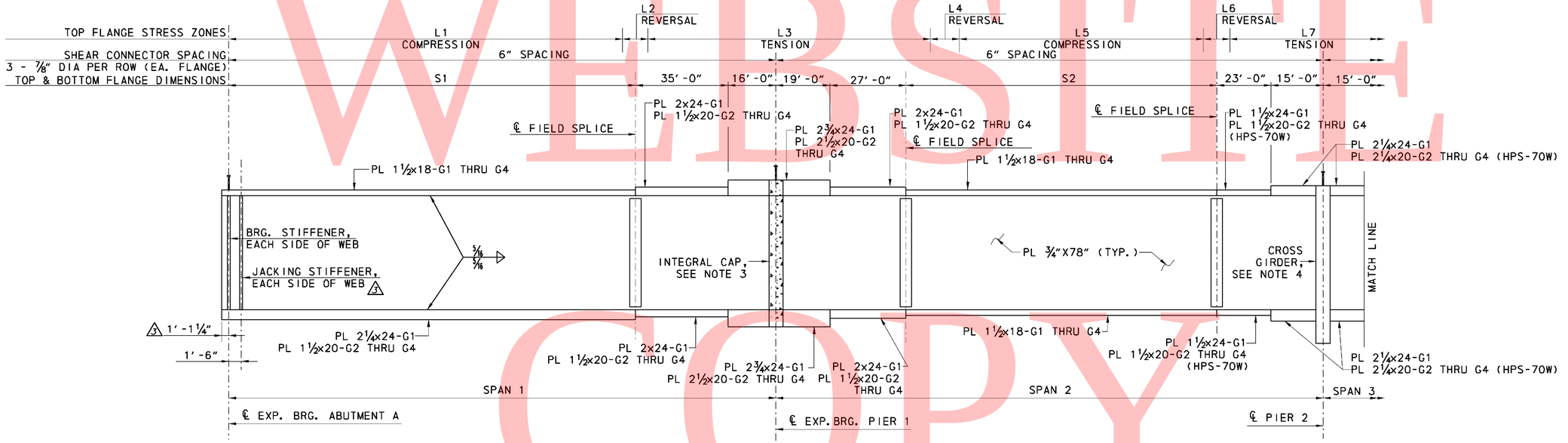

GIRDER ELEVATION

NOT TO SCALE

△3

GIRDER	RADIUS	PLATE LENGTH								STRESS ZONE LENGTHS												
		SPAN 1	SPAN 2	SPAN 3	SPAN 4	S1	S2	S3	S4	L1	L2	L3	L4	L5	L6	L7	L8	L9	L10	L11	L12	L13
G1	1902′-4½″	195′-2⅝″	195′-2⅝″	195′-2⅝″	165′-2½″	144′-2⅝″	111′-2⅝″	111′-2⅝″	121′-2½″	149′-3½″	9′-3½″	82′-9½″	17′-2⅜″	92′-9⅝″	9′-11¾″	68′-8⅛″	5′-7⅛″	102′-2⅛″	13′-5⅛″	67′-6⅛″	9′-11⅜″	122′-2⅝″
G2	1893′-1½″	194′-3⅛″	194′-3⅛″	194′-3⅛″	164′-4⅛″	143′-3⅞″	110′-3⅞″	110′-3⅞″	120′-4⅛″	149′-9⅛″	9′-2⅝″	76′-4⅛″	16′-2⅛″	98′-5⅛″	8′-8⅛″	67′-6⅝″	6′-0⅛″	104′-0″	12′-11⅛″	67′-3⅛″	8′-8½″	122′-1⅝″
G3	1883′-10½″	193′-4⅛″	193′-4⅛″	193′-4⅛″	163′-7⅛″	142′-4⅛″	109′-4⅛″	109′-4⅛″	119′-7⅛″	148′-6⅝″	9′-5½″	75′-0⅛″	15′-0″	99′-5⅜″	7′-10⅛″	68′-7⅛″	5′-9⅛″	104′-9⅞″	12′-3½″	66′-1⅛″	8′-9⅛″	121′-9⅛″
G4	1874′-7½″	192′-4¾″	192′-4¾″	192′-4¾″	162′-9⅛″	141′-4¾″	108′-4¾″	108′-4¾″	118′-9⅛″	147′-2¼″	9′-8⅜″	75′-1⅛″	13′-2¼″	99′-6⅛″	8′-0¼″	69′-5⅛″	5′-4⅛″	105′-1⅛″	11′-11¾″	65′-4⅛″	9′-0¾″	120′-9⅛″

NOTES:

1. FOR GENERAL NOTES, SEE DWG. S6-02.
2. FOR TYPICAL SECTION, SEE DWG. S6-03.
3. FOR INTEGRAL PIER CAP DETAILS, SEE DWG. S6-028 AND S6-29.
4. FOR CROSS GIRDER DETAILS, SEE DWG. S6-23 THRU S6-25.
5. FOR DIAPHRAGM DETAILS, SEE DWG. S6-35.
6. FOR INTERMEDIATE CROSS FRAME DETAILS, SEE DWG. S6-35.
7. FOR GIRDER FIELD SPLICE DETAILS, SEE DWG. S6-33 AND S6-34.
8. FOR BEARING TYPES AND LOCATIONS, SEE DWG. S6-38.
9. THERE SHALL BE NO FIELD WELDING TO THE TOP FLANGE, EXCEPT FOR SHEAR STUDS, IN THE TENSION AND STRESS REVERSAL AREAS.
10. SHEAR STUDS SHALL BE SPACED TO CLEAR SPLICE BOLTS.

UNOFFICIAL WEBSITE COPY

2/16/2011 5:20:59 PM
M:\PROJECTS\2003\03059_DELTRNPK\SR1_MALL\PHASE II\CONSTRUCTION SERVICES\ADDENDUM 3\CADD WORKING DRAWINGS\FRO1_BR-S6_SR1.DGN

DELAWARE DEPARTMENT OF TRANSPORTATION

ADDENDUMS / REVISIONS	
ADDENDUM NO. △3, DIMENSION, TABLE, JACKING STIFFENER, 02/18/11, DWD	

SR1 / I-95 INTERCHANGE

CONTRACT	BRIDGE NO.	1-268B
28-090-03	DESIGNED BY:	MDM
COUNTY	CHECKED BY:	DWD
NEW CASTLE		

RAMP B OVER I-95NB
FRAMING PLAN AND GIRDER ELEVATION 1

S6- 31

SHEET NO.	TOTAL SHTS.
478	803

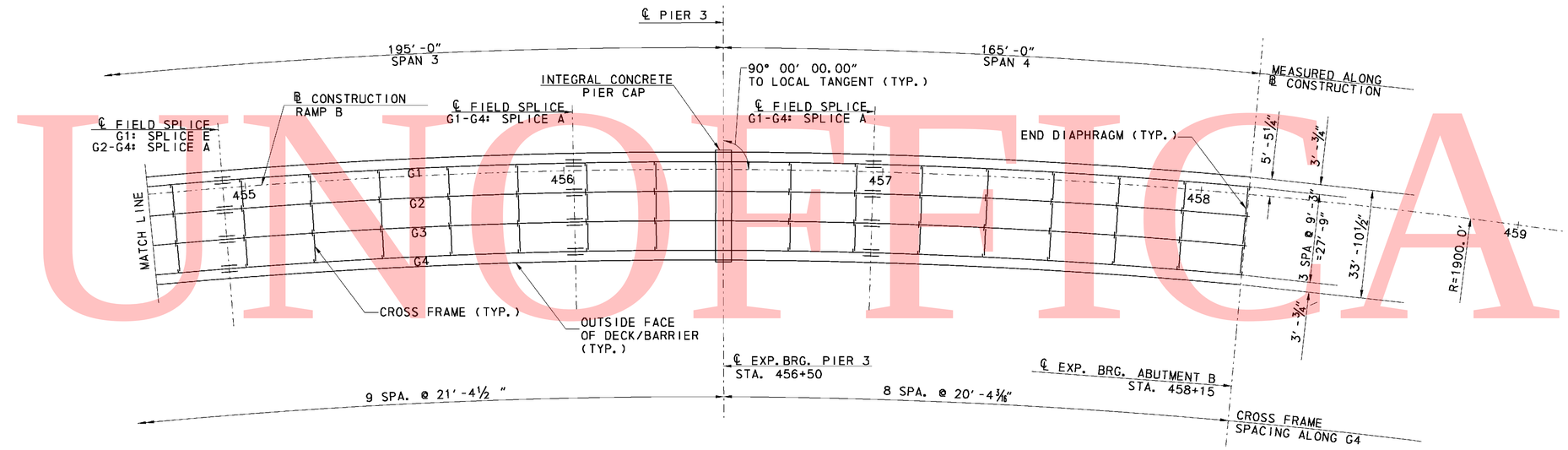

FRAMING PLAN

SCALE: 1″ = 20′-0″

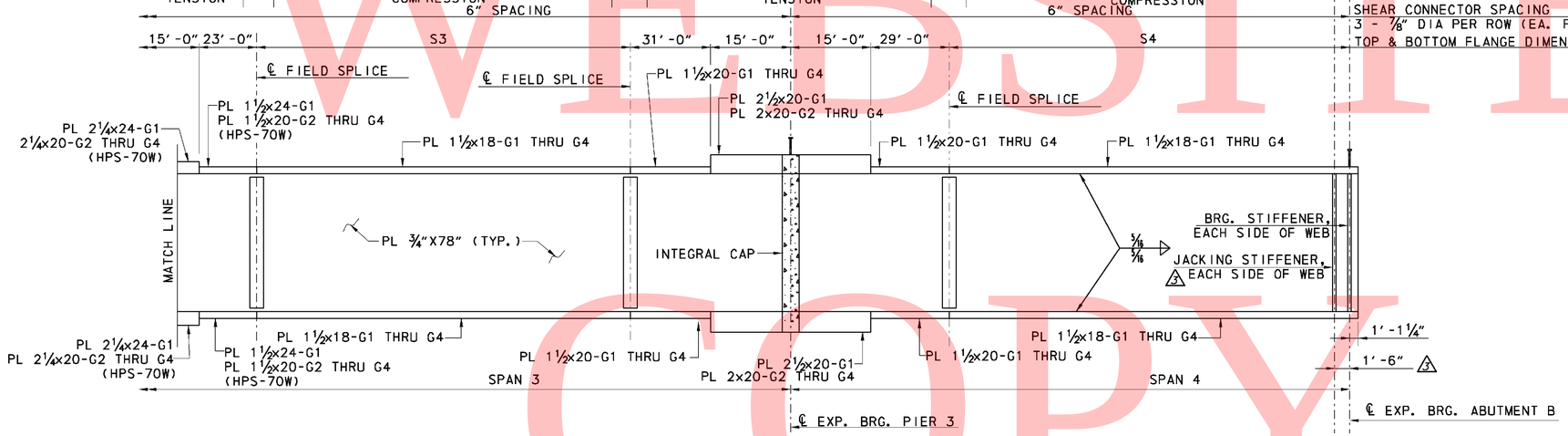

GIRDER ELEVATION

NOT TO SCALE

NOTES:

1. FOR FRAMING PLAN AND GIRDER ELEVATION NOTES, SEE DWG. S6-31 .
2. FOR GIRDER CAMBER TABLE, SEE DWG. S6-32.

UNOFFICIAL WEBSITE COPY

DELAWARE DEPARTMENT OF TRANSPORTATION	ADDENDUMS / REVISIONS ADDENDUM NO. 3, DIMENSION, JACKING STIFFENER, 02/18/11, DWD	SR1 / I-95 INTERCHANGE	CONTRACT 28-090-03 COUNTY NEW CASTLE	BRIDGE NO. 1-268B DESIGNED BY: MDM CHECKED BY: DWD	RAMP B OVER I-95NB FRAMING PLAN AND GIRDER ELEVATION 2	S6-32 SHEET NO. 479 TOTAL SHTS. 803

2/16/2011 5:21:32 PM
M:\PROJECTS\2003\03059_DELTRNPK\SR1_MALL\PHASE III CONSTRUCTION SERVICES\ADDENDUM 3\CADD WORKING DRAWINGS\FRO2_BR_S6_SR1.DGN

UNOFFICIAL WEBSITE COPY

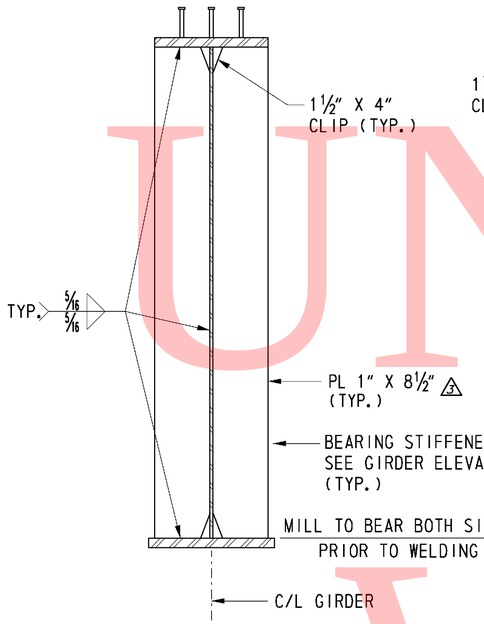

BEARING STIFFENER
SCALE: ¾" = 1'-0"

3 JACKING STIFFENER
SCALE: ¾" = 1'-0"

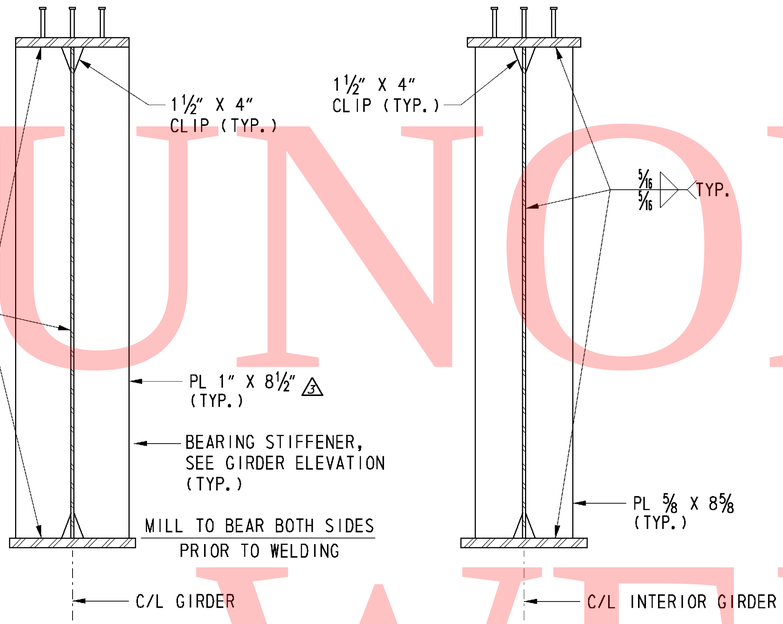

CONNECTION PLATE
SCALE: ¾" = 1'-0"

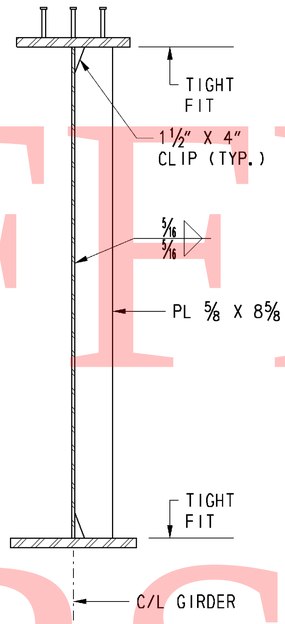

TRANSVERSE STIFFENER
SCALE: ¾" = 1'-0"

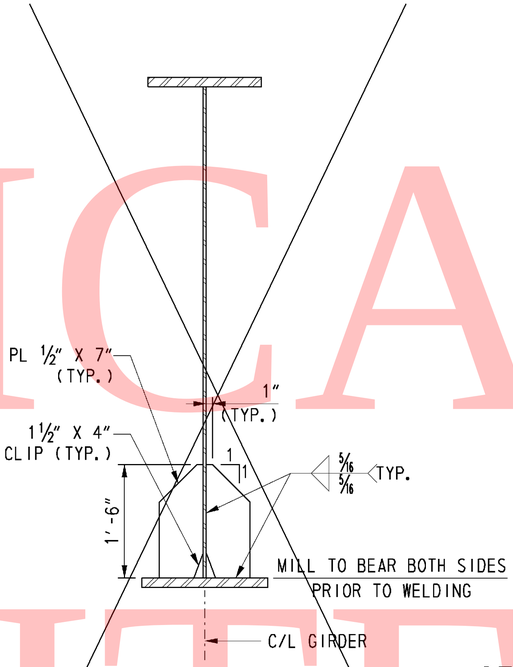

JACKING STIFFENER
SCALE: ¾" = 1'-0"

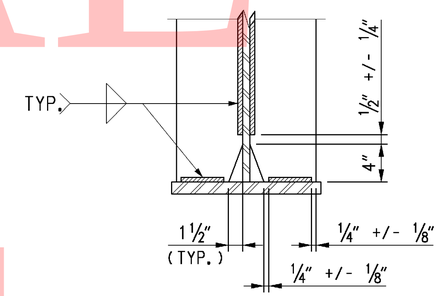

STIFFENER & CONNECTION PLATE WELD TERMINATION
NOT TO SCALE

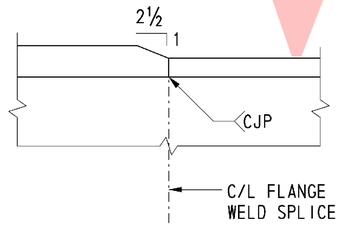

FLANGE PLATE THICKNESS TRANSITION
NOT TO SCALE

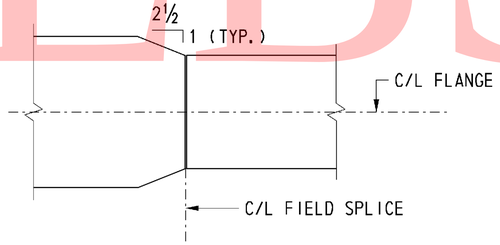

BOTTOM FLANGE PLATE WIDTH TRANSITION
NOT TO SCALE

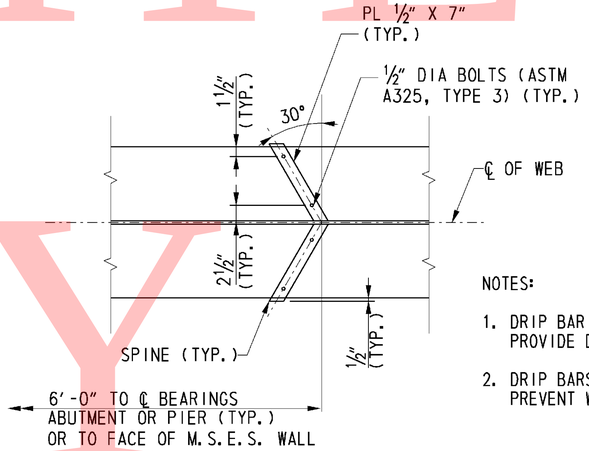

NOTES:

1. DRIP BAR DETAIL SHALL BE PLACED ON BOTTOM FLANGE PROVIDE DRIP BAR FOR GIRDER G1 AND G4 ONLY.
2. DRIP BARS ARE PLACED ADJACENT TO SUPPORTS TO PREVENT WATER FLOW ONTO SUPPORT.

DRIP BAR DETAIL
NOT TO SCALE

CROSS REFERENCE NOTES:

1. FOR GENERAL NOTES, SEE DWG. S6-2.
2. FOR FRAMING PLAN, SEE DWG. S6-31 & S6-32.
3. FOR CROSS FRAMING DETAILS, SEE DWG. S6-35.

DELAWARE DEPARTMENT OF TRANSPORTATION	ADDENDUMS / REVISIONS		SR1 / I-95 INTERCHANGE	CONTRACT 28-090-03	BRIDGE NO. 1-268B	RAMP B OVER I-95NB	S6-36 SHEET NO.
	ADDENDUM NO. 3, CALLED OUT PLATE SIZE, DELETED DETAIL, JACKING STIFFENER, 02/18/11, DWD			COUNTY NEW CASTLE	DESIGNED BY: DWD	GIRDER STIFFENER DETAILS	483 TOTAL SHTS.
					CHECKED BY:		803

2/16/2011 4:55:52 PM
M:\PROJECTS\2003\03059_DELTRNPK\SR1_MAIL\PHASE III CONSTRUCTION SERVICES\ADDENDUM 3\CADD WORKING DRAWINGS\BMO4_BR-S6_SR1.DGN

SCHEMATIC CAMBER DIAGRAM

LEGEND

DLS - DENOTES DEFLECTION DUE TO STRUCTURAL STEEL GIRDER.

DLC - DENOTES DEFLECTION DUE TO DECK SLAB, HAUNCH AND S.I.P. FORMS

SDL - DENOTES DEFLECTION DUE TO BARRIER

TDC - DENOTES TOTAL DEAD LOAD DEFLECTION AND CAMBER

VCO - DENOTES CAMBER FOR VERTICAL CURVE ORDINATE DUE TO ROADWAY PROFILE

TDC+VCO - DENOTES TOTAL CAMBER

ALL GIRDERS SHALL BE CAMBERED FOR DEAD LOAD DEFLECTION ORDINATES TO THE TO THE DIMENSIONS SHOWN ON THESE PLANS. THE CAMBER TOLERANCE IS NOTHING UNDER TO THREE QUARTERS (¾) INCH OVER.

CAMBER ORDINATE — SPAN 1

GIRDER NO.	POINT	CL BRG	0.05L	0.10L	0.15L	0.20L	0.25L	0.30L	0.35L	0.40L	0.45L	0.50L	0.55L	0.60L	0.65L	0.70L	0.75L	0.80L	0.85L	0.90L	0.95L	CL PIER 1
G1	DLS	0	1/2	15/16	1 3/8	1 3/4	2 1/16	2 5/16	2 1/2	2 9/16	2 5/8	2 9/16	2 7/16	2 1/4	1 15/16	1 11/16	1 3/8	1 1/16	11/16	7/16	3/16	0
	DLC	0	7/8	1 5/8	2 1/2	3	3 3/4	3 15/16	4 1/2	4 3/8	4 11/16	4 1/4	4 5/16	3 5/8	3 1/2	2 11/16	2 3/8	1 5/8	1 3/16	5/8	5/16	0
	SDL	0	1/8	1/4	3/8	1/2	5/8	11/16	3/4	3/4	3/4	3/4	11/16	5/8	9/16	1/2	3/8	5/16	3/16	1/8	1/16	0
	TDC	0	1 1/2	2 13/16	4 1/4	5 1/4	6 7/16	6 15/16	7 3/4	7 11/16	8 1/16	7 9/16	7 7/16	6 1/2	6	4 7/8	4 1/8	2 15/16	2 1/8	1 3/16	9/16	0
	VCO	0	0	0	0	0	9/16	1 1/16	1 7/16	1 13/16	2 1/16	2 1/4	2 5/16	2 3/8	2 5/16	2 1/4	2 1/16	1 13/16	1 7/16	1 1/16	9/16	0
	TDC+VCO	0	1 1/2	2 13/16	4 1/4	5 1/4	7	7 15/16	9 3/16	9 1/2	10 1/8	9 3/4	9 3/4	8 7/8	8 3/8	7 1/8	6 3/16	4 3/4	3 9/16	2 1/4	1 1/8	0
G2	DLS	0	7/16	7/8	1 1/4	1 5/8	1 15/16	2 1/8	2 5/16	2 3/8	2 7/16	2 3/8	2 1/4	2 1/16	1 13/16	1 9/16	1 1/4	15/16	5/8	3/8	3/16	0
	DLC	0	7/8	1 9/16	2 7/16	2 15/16	3 5/8	3 13/16	4 3/8	4 1/4	4 9/16	4 1/8	4 3/16	3 9/16	3 3/8	2 5/8	2 5/16	1 9/16	1 3/16	5/8	5/16	0
	SDL	0	1/8	1/4	3/8	1/2	9/16	5/8	11/16	11/16	3/4	11/16	11/16	5/8	9/16	1/2	3/8	5/16	3/16	1/8	1/16	0
	TDC	0	1 7/16	2 11/16	4 1/8	5	6 1/8	6 5/8	7 3/8	7 3/8	7 11/16	7 3/16	7 1/8	6 1/4	5 3/4	4 5/8	3 15/16	2 13/16	2	1 1/16	1/2	0
	VCO	0	0	0	0	0	9/16	1 1/16	1 7/16	1 13/16	2 1/16	2 1/4	2 5/16	2 3/8	2 5/16	2 1/4	2 1/16	1 13/16	1 7/16	1 1/16	9/16	0
	TDC+VCO	0	1 7/16	2 11/16	4 1/8	5	6 11/16	7 11/16	8 13/16	9 1/8	9 3/4	9 7/16	9 7/16	8 5/8	8 1/8	6 7/8	6	4 9/16	3 7/16	2 1/8	1 1/16	0
G3	DLS	0	7/16	13/16	1 3/16	1 1/2	1 3/4	2	2 1/8	2 3/16	2 3/16	2 3/16	2 1/16	1 7/8	1 5/8	1 3/8	1 1/8	7/8	9/16	5/16	1/8	0
	DLC	0	13/16	1 9/16	2 3/8	2 13/16	3 9/16	3 3/4	4 1/4	4 1/8	4 7/16	4	4 1/16	3 7/16	3 5/16	2 1/2	2 1/4	1 1/2	1 1/8	9/16	1/4	0
	SDL	0	1/8	1/4	3/8	7/16	9/16	5/8	11/16	11/16	11/16	11/16	5/8	5/8	1/2	7/16	3/8	1/4	3/16	1/8	1/16	0
	TDC	0	1 3/8	2 9/16	3 7/8	4 13/16	5 7/8	6 5/16	7	7	7 5/16	6 13/16	6 3/4	5 7/8	5 1/2	4 3/8	3 11/16	2 5/8	1 7/8	1	7/16	0
	VCO	0	0	0	0	0	9/16	1 1/16	1 7/16	1 13/16	2 1/16	2 1/4	2 5/16	2 3/8	2 5/16	2 1/4	2 1/16	1 13/16	1 7/16	1 1/16	9/16	0
	TDC+VCO	0	1 3/8	2 9/16	3 7/8	4 13/16	6 7/16	7 3/8	8 1/2	8 13/16	9 3/8	9 1/16	9 1/8	8 1/4	7 13/16	6 5/8	5 3/4	4 3/8	3 5/16	2 1/16	1	0
G4	DLS	0	3/8	3/4	1 1/16	1 3/8	1 5/8	1 13/16	1 15/16	2	2	1 15/16	1 13/16	1 11/16	1 1/2	1 1/4	1	3/4	1/2	5/16	1/8	0
	DLC	0	13/16	1 1/2	2 1/4	2 3/4	3 7/16	3 9/16	4 1/8	3 15/16	4 1/4	3 7/8	3 15/16	3 5/16	3 3/16	2 7/16	2 1/8	1 7/16	1 1/16	1/2	1/4	0
	SDL	0	1/8	1/4	3/8	7/16	1/2	9/16	5/8	11/16	11/16	5/8	5/8	9/16	1/2	7/16	3/8	1/4	3/16	1/8	1/16	0
	TDC	0	1 5/16	2 7/16	3 11/16	4 1/2	5 9/16	5 15/16	6 5/8	6 5/8	6 15/16	6 7/16	6 3/8	5 9/16	5 1/8	4 1/16	3 7/16	2 7/16	1 11/16	7/8	7/16	0
	VCO	0	0	0	0	0	9/16	1 1/16	1 7/16	1 13/16	2 1/16	2 1/4	2 5/16	2 3/8	2 5/16	2 1/4	2 1/16	1 13/16	1 7/16	1 1/16	9/16	0
	TDC+VCO	0	1 5/16	2 7/16	3 11/16	4 1/2	6 1/8	7	8 1/8	8 3/8	8 15/16	8 11/16	8 11/16	7 15/16	7 1/2	6 5/16	5 1/2	4 3/16	3 3/16	1 15/16	1	0

CAMBER ORDINATE — SPAN 2

GIRDER NO.	POINT	0.05L	0.10L	0.15L	0.20L	0.25L	0.30L	0.35L	0.40L	0.45L	0.50L	0.55L	0.60L	0.65L	0.70L	0.75L	0.80L	0.85L	0.90L	0.95L	CL PIER 2
G1	DLS	-1/8	-3/16	-3/16	-1/8	-1/16	1/16	1/8	1/4	5/16	3/8	7/16	7/16	7/16	3/8	5/16	1/4	1/8	1/16	0	0
	DLC	-3/16	-3/16	-3/16	1/16	1/8	7/16	9/16	7/8	15/16	1 1/8	1 1/8	1 3/16	1	15/16	11/16	9/16	5/16	3/16	1/16	0
	SDL	0	0	0	0	1/16	1/8	1/8	3/16	3/16	1/4	1/4	1/4	3/16	3/16	1/8	1/8	1/16	1/16	0	0
	TDC	-5/16	-3/8	-3/8	-1/16	1/8	5/8	7/8	1 5/16	1 1/2	1 13/16	1 13/16	1 7/8	1 5/8	1 1/2	1 1/8	7/8	1/2	1/4	1/16	0
	VCO	11/16	1 5/16	1 7/8	2 3/8	2 13/16	3 1/8	3 3/8	3 9/16	3 11/16	3 11/16	3 11/16	3 9/16	3 3/8	3 1/8	2 13/16	2 3/8	1 7/8	1 5/16	11/16	0
	TDC+VCO	3/8	15/16	1 9/16	2 5/16	2 15/16	3 3/4	4 1/4	4 7/8	5 3/16	5 1/2	5 7/16	5 7/16	5	4 5/8	3 15/16	3 1/4	2 3/8	1 9/16	13/16	0
G2	DLS	-1/8	-1/8	-1/8	-1/16	1/16	1/8	1/4	3/8	7/16	1/2	1/2	1/2	1/2	7/16	5/16	1/4	1/8	1/16	0	0
	DLC	-1/8	-1/8	-1/8	1/8	1/4	9/16	11/16	1	1 1/16	1 1/4	1 3/16	1 1/4	1 1/16	1	3/4	9/16	5/16	3/16	1/16	0
	SDL	0	0	0	1/16	1/16	1/8	3/16	3/16	3/16	1/4	1/4	1/4	3/16	3/16	1/8	1/8	1/16	1/16	0	0
	TDC	-1/4	-5/16	-3/16	1/8	3/8	7/8	1 1/8	1 9/16	1 11/16	1 15/16	1 15/16	1 15/16	1 3/4	1 9/16	1 3/16	15/16	9/16	1/4	1/16	0
	VCO	11/16	1 5/16	1 7/8	2 3/8	2 13/16	3 1/8	3 3/8	3 9/16	3 11/16	3 11/16	3 11/16	3 9/16	3 3/8	3 1/8	2 13/16	2 3/8	1 7/8	1 5/16	11/16	0
	TDC+VCO	7/16	1 1/16	1 11/16	2 1/2	3 3/16	4	4 1/2	5 1/8	5 3/8	5 11/16	5 5/8	5 1/2	5 1/8	4 11/16	4	3 5/16	2 7/16	1 5/8	13/16	0
G3	DLS	-1/16	-1/16	-1/16	0	1/8	1/4	3/8	7/16	1/2	9/16	9/16	9/16	1/2	7/16	3/8	1/4	1/8	1/16	0	0
	DLC	-1/8	-1/16	-1/16	1/4	5/16	11/16	13/16	1 1/8	1 1/8	1 5/16	1 1/4	1 1/4	1 1/8	1	3/4	9/16	5/16	3/16	1/16	0
	SDL	0	0	0	1/16	1/16	1/8	3/16	3/16	1/4	1/4	1/4	1/4	3/16	3/16	1/8	1/8	1/16	1/16	0	0
	TDC	-1/4	-3/16	-1/16	5/16	9/16	1 1/16	1 5/16	1 3/4	1 7/8	2 1/8	2 1/16	2 1/16	1 13/16	1 5/8	1 1/4	15/16	9/16	5/16	1/16	0
	VCO	11/16	1 5/16	1 7/8	2 3/8	2 13/16	3 1/8	3 3/8	3 9/16	3 11/16	3 11/16	3 11/16	3 9/16	3 3/8	3 1/8	2 13/16	2 3/8	1 7/8	1 5/16	11/16	0
	TDC+VCO	1/2	1 1/8	1 13/16	2 11/16	3 3/8	4 3/16	4 11/16	5 5/16	5 9/16	5 13/16	5 3/4	5 5/8	5 3/16	4 3/4	4 1/16	3 5/16	2 7/16	1 5/8	13/16	0
G4	DLS	-1/16	-1/16	0	1/16	3/16	5/16	7/16	1/2	9/16	5/8	5/8	5/8	9/16	1/2	3/8	1/4	3/16	1/16	0	0
	DLC	-1/8	-1/16	0	5/16	7/16	3/4	7/8	1 3/16	1 3/16	1 3/8	1 5/16	1 5/16	1 1/8	1	3/4	9/16	5/16	3/16	1/16	0
	SDL	0	0	0	1/16	1/8	1/8	3/16	3/16	1/4	1/4	1/4	1/4	3/16	3/16	1/8	1/8	1/16	1/16	0	0
	TDC	-3/16	-1/8	1/16	7/16	11/16	1 3/16	1 1/2	1 7/8	2	2 1/4	2 3/16	2 1/8	1 7/8	1 11/16	1 5/16	15/16	9/16	5/16	1/16	0
	VCO	11/16	1 5/16	1 7/8	2 3/8	2 13/16	3 1/8	3 3/8	3 9/16	3 11/16	3 11/16	3 11/16	3 9/16	3 3/8	3 1/8	2 13/16	2 3/8	1 7/8	1 5/16	11/16	0
	TDC+VCO	1/2	1 1/4	1 15/16	2 13/16	3 1/2	4 5/16	4 7/8	5 7/16	5 11/16	5 15/16	5 13/16	5 11/16	5 1/4	4 13/16	4 1/16	3 5/16	2 7/16	1 5/8	13/16	0

CAMBER ORDINATE — SPAN 3

GIRDER NO.	POINT	CL PIER 2	0.05L	0.10L	0.15L	0.20L	0.25L	0.30L	0.35L	0.40L	0.45L	0.50L	0.55L	0.60L	0.65L	0.70L	0.75L	0.80L	0.85L	0.90L	0.95L	CL PIER 3
G1	DLS	0	0	1/16	3/16	5/16	7/16	9/16	11/16	13/16	13/16	7/8	13/16	3/4	11/16	9/16	7/16	1/4	1/8	1/16	0	0
	DLC	0	1/16	3/16	3/8	11/16	15/16	1 3/16	1 7/16	1 9/16	1 3/4	1 11/16	1 11/16	1 7/16	1 3/8	1	7/8	7/16	5/16	0	0	0
	SDL	0	0	1/16	1/16	1/8	3/16	1/4	1/4	5/16	5/16	5/16	5/16	5/16	1/4	1/4	3/16	1/8	1/16	0	0	0
	TDC	0	1/8	5/16	11/16	1 1/8	1 9/16	2	2 7/16	2 11/16	2 7/8	2 13/16	2 7/8	2 1/2	2 5/16	1 3/4	1 7/16	13/16	9/16	1/8	0	0
	VCO	0	11/16	1 5/16	1 7/8	2 3/8	2 13/16	3 1/8	3 3/8	3 9/16	3 11/16	3 11/16	3 11/16	3 9/16	3 3/8	3 1/8	2 13/16	2 3/8	1 7/8	1 5/16	11/16	0
	TDC+VCO	0	13/16	1 11/16	2 9/16	3 1/2	4 3/8	5 1/8	5 13/16	6 1/4	6 9/16	6 9/16	6 9/16	6 1/16	5 11/16	4 7/8	4 1/4	3 3/16	2 7/16	1 7/16	11/16	0
G2	DLS	0	0	1/16	3/16	5/16	7/16	9/16	11/16	3/4	13/16	13/16	13/16	3/4	11/16	9/16	7/16	5/16	3/16	1/16	0	0
	DLC	0	1/16	3/16	3/8	11/16	15/16	1 3/16	1 7/16	1 9/16	1 11/16	1 5/8	1 11/16	1 7/16	1 3/8	1	7/8	1/2	3/8	1/16	0	0
	SDL	0	0	1/16	1/16	1/8	3/16	1/4	1/4	5/16	5/16	5/16	5/16	5/16	1/4	1/4	3/16	1/8	1/16	1/16	0	0
	TDC	0	1/8	5/16	11/16	1 1/8	1 9/16	2	2 3/8	2 5/8	2 7/8	2 13/16	2 13/16	2 1/2	2 5/16	1 3/4	1 1/2	7/8	9/16	3/16	1/16	0
	VCO	0	11/16	1 5/16	1 7/8	2 3/8	2 13/16	3 1/8	3 3/8	3 9/16	3 11/16	3 11/16	3 11/16	3 9/16	3 3/8	3 1/8	2 13/16	2 3/8	1 7/8	1 5/16	11/16	0
	TDC+VCO	0	13/16	1 11/16	2 9/16	3 1/2	4 3/8	5 1/8	5 3/4	6 3/16	6 1/2	6 1/2	6 1/2	6 1/16	5 11/16	4 7/8	4 1/4	3 1/4	2 1/2	1 1/2	3/4	0
G3	DLS	0	0	1/16	3/16	5/16	7/16	9/16	11/16	3/4	13/16	13/16	13/16	3/4	11/16	9/16	7/16	5/16	3/16	1/16	0	0
	DLC	0	1/16	3/16	3/8	11/16	15/16	1 3/16	1 7/16	1 9/16	1 11/16	1 5/8	1 11/16	1 7/16	1 3/8	1	7/8	1/2	3/8	1/8	1/16	0
	SDL	0	0	1/16	1/16	1/8	3/16	1/4	1/4	5/16	5/16	5/16	5/16	5/16	1/4	3/16	3/16	1/8	1/16	1/16	0	0
	TDC	0	1/8	5/16	11/16	1 1/8	1 9/16	2	2 5/16	2 9/16	2 13/16	2 3/4	2 3/4	2 1/2	2 5/16	1 13/16	1 1/2	15/16	5/8	3/16	1/16	0
	VCO	0	11/16	1 5/16	1 7/8	2 3/8	2 13/16	3 1/8	3 3/8	3 9/16	3 11/16	3 11/16	3 11/16	3 9/16	3 3/8	3 1/8	2 13/16	2 3/8	1 7/8	1 5/16	11/16	0
	TDC+VCO	0	13/16	1 11/16	2 9/16	3 1/2	4 5/16	5 1/8	5 3/4	6 1/8	6 1/2	6 1/2	6 7/16	6 1/16	5 11/16	4 15/16	4 1/4	3 5/16	2 1/2	1 9/16	3/4	0
G4	DLS	0	0	1/16	3/16	5/16	7/16	9/16	5/8	3/4	3/4	13/16	3/4	3/4	5/8	9/16	7/16	5/16	3/16	1/16	0	0
	DLC	0	1/16	3/16	3/8	11/16	7/8	1 3/16	1 3/8	1 1/2	1 5/8	1 5/8	1 5/8	1 7/16	1 3/8	1 1/16	7/8	9/16	3/8	1/8	1/16	0
	SDL	0	0	1/16	1/16	1/8	3/16	3/16	1/4	1/4	5/16	5/16	5/16	1/4	1/4	3/16	3/16	1/8	1/16	1/16	0	0
	TDC	0	1/8	5/16	5/8	1 1/16	1 1/2	1 15/16	2 1/4	2 1/2	2 11/16	2 11/16	2 11/16	2 7/16	2 1/4	1 13/16	1 1/2	15/16	5/8	1/4	1/16	0
	VCO	0	11/16	1 5/16	1 7/8	2 3/8	2 13/16	3 1/8	3 3/8	3 9/16	3 11/16	3 11/16	3 11/16	3 9/16	3 3/8	3 1/8	2 13/16	2 3/8	1 7/8	1 5/16	11/16	0
	TDC+VCO	0	13/16	1 5/8	2 9/16	3 1/2	4 5/16	5 1/16	5 5/8	6 1/16	6 3/8	6 7/16	6 3/8	6	5 5/8	4 7/8	4 1/4	3 5/16	2 1/2	1 9/16	3/4	0

CAMBER ORDINATE — SPAN 4

GIRDER NO.	POINT	0.05L	0.10L	0.15L	0.20L	0.25L	0.30L	0.35L	0.40L	0.45L	0.50L	0.55L	0.60L	0.65L	0.70L	0.75L	0.80L	0.85L	0.90L	0.95L	CL ~~PIER 1~~ BRG
G1	DLS	1/16	1/8	1/4	3/8	9/16	11/16	7/8	1	1 1/16	1 3/16	1 3/16	1 3/16	1 3/16	1 1/8	1	13/16	11/16	7/16	1/4	0
	DLC	1/8	5/16	1/2	15/16	1 1/8	1 5/8	1 13/16	2 1/4	2 5/16	2 5/8	2 9/16	2 11/16	2 1/2	2 7/16	2 1/16	1 7/8	1 3/8	1	1/2	0
	SDL	0	1/16	1/16	1/8	3/16	1/4	5/16	5/16	3/8	3/8	7/16	7/16	3/8	3/8	5/16	1/4	1/4	1/8	1/16	0
	TDC	3/16	1/2	7/8	1 1/2	1 7/8	2 9/16	2 15/16	3 9/16	3 3/4	4 3/16	4 3/16	4 5/16	4 1/16	3 15/16	3 7/16	3	2 1/4	1 5/8	13/16	0
	VCO	1/2	15/16	1 3/8	1 11/16	2	2 1/4	2 7/16	2 9/16	2 5/8	2 11/16	2 5/8	2 9/16	2 7/16	2 1/4	2	1 11/16	1 3/8	15/16	1/2	0
	TDC+VCO	11/16	1 7/16	2 3/16	3 3/16	3 7/8	4 13/16	5 3/8	6 1/8	6 3/8	6 13/16	6 13/16	6 7/8	6 1/2	6 1/8	5 3/8	4 11/16	3 5/8	2 9/16	1 5/16	0
G2	DLS	1/16	1/8	1/4	3/8	1/2	11/16	13/16	15/16	1	1 1/16	1 1/8	1 1/8	1 1/8	1	15/16	13/16	5/8	7/16	1/4	0
	DLC	1/8	5/16	1/2	7/8	1 1/16	1 1/2	1 11/16	2 1/16	2 1/8	2 7/16	2 3/8	2 1/2	2 5/16	2 1/4	1 15/16	1 11/16	1 5/16	15/16	7/16	0
	SDL	0	1/16	1/16	1/8	3/16	1/4	1/4	5/16	5/16	3/8	3/8	3/8	3/8	5/16	5/16	1/4	3/16	1/8	1/16	0
	TDC	3/16	1/2	13/16	1 3/8	1 3/4	2 7/16	2 3/4	3 5/16	3 1/2	3 7/8	3 7/8	4	3 3/4	3 5/8	3 3/16	2 3/4	2 1/8	1 1/2	3/4	0
	VCO	1/2	15/16	1 3/8	1 11/16	2	2 1/4	2 7/16	2 9/16	2 5/8	2 11/16	2 5/8	2 9/16	2 7/16	2 1/4	2	1 11/16	1 3/8	15/16	1/2	0
	TDC+VCO	11/16	1 7/16	2 3/16	3 1/16	3 3/4	4 5/8	5 3/16	5 7/8	6 1/8	6 9/16	6 1/2	6 9/16	6 3/16	5 7/8	5 3/16	4 7/16	3 1/2	2 7/16	1 1/4	0
G3	DLS	1/16	1/8	3/16	3/8	1/2	5/8	3/4	7/8	15/16	1	1 1/16	1 1/16	1	15/16	7/8	3/4	9/16	3/8	3/16	0
	DLC	1/16	1/4	7/16	13/16	1	1 3/8	1 9/16	1 7/8	2	2 1/4	2 3/16	2 5/16	2 1/8	2 1/16	1 13/16	1 9/16	1 3/16	7/8	7/16	0
	SDL	0	1/16	1/16	1/8	3/16	3/16	1/4	5/16	5/16	5/16	3/8	3/8	5/16	5/16	1/4	1/4	3/16	1/8	1/16	0
	TDC	1/8	7/16	3/4	1 1/4	1 5/8	2 1/4	2 9/16	3 1/16	3 1/4	3 9/16	3 5/8	3 11/16	3 1/2	3 3/8	2 15/16	2 9/16	1 15/16	1 3/8	11/16	0
	VCO	1/2	15/16	1 3/8	1 11/16	2	2 1/4	2 7/16	2 9/16	2 5/8	2 11/16	2 5/8	2 9/16	2 7/16	2 1/4	2	1 11/16	1 3/8	15/16	1/2	0
	TDC+VCO	5/8	1 3/8	2 1/8	3	3 5/8	4 7/16	5	5 5/8	5 7/8	6 1/4	6 1/4	6 1/4	5 15/16	5 9/16	4 15/16	4 1/4	3 5/16	2 5/16	1 3/16	0
G4	DLS	1/16	1/8	3/16	5/16	7/16	9/16	11/16	13/16	7/8	15/16	15/16	15/16	15/16	7/8	13/16	11/16	1/2	3/8	3/16	0
	DLC	1/16	1/4	3/8	11/16	15/16	1 1/4	1 7/16	1 3/4	1 13/16	2	2	2 1/16	1 15/16	1 7/8	1 5/8	1 7/16	1 1/8	3/4	3/8	0
	SDL	0	1/16	1/16	1/8	1/8	3/16	1/4	1/4	5/16	5/16	5/16	5/16	5/16	5/16	1/4	3/16	3/16	1/8	1/16	0
	TDC	1/8	3/8	11/16	1 1/8	1 1/2	2	2 5/16	2 3/4	3	3 1/4	3 5/16	3 3/8	3 3/16	3 1/16	2 11/16	2 5/16	1 13/16	1 1/4	5/8	0
	VCO	1/2	15/16	1 3/8	1 11/16	2	2 1/4	2 7/16	2 9/16	2 5/8	2 11/16	2 5/8	2 9/16	2 7/16	2 1/4	2	1 11/16	1 3/8	15/16	1/2	0
	TDC+VCO	5/8	1 5/16	2	2 13/16	3 1/2	4 1/4	4 3/4	5 5/16	5 5/8	5 15/16	5 15/16	5 15/16	5 5/8	5 1/4	4 11/16	4	3 1/8	2 3/16	1 1/8	0

CROSS REFERENCE NOTES:

1. FOR GENERAL NOTES, SEE DWG. S6-1.
2. FOR VERTICAL CURVE DATA, SEE DWG. S6-1.
3. FOR GIRDER ELEVATION, SEE DWG. S6-31 & S6-32.

UNOFFICAL WEBSITE COPY

2/16/2011 4:59:51 PM
M:\PROJECTS\2003\03059_DELTRNPK\SR1_MALL\PHASE III\CONSTRUCTION SERVICES\ADDENDUM 3\CADD WORKING DRAWINGS\CT01_BR-S6_SR1.DGN

DELAWARE DEPARTMENT OF TRANSPORTATION

ADDENDUMS / REVISIONS
ADDENDUM NO. 3, CORRECTED TABLE, 02/18/11, DWD

SR1 / I-95 INTERCHANGE

CONTRACT 28-090-03
COUNTY NEW CASTLE
BRIDGE NO. 1-268B
DESIGNED BY: MDM
CHECKED BY: DWD

RAMP B OVER I-95NB
CAMBER DIAGRAM

S6-37
SHEET NO. 484
TOTAL SHTS. 803

UNOFFICIAL WEBSITE COPY

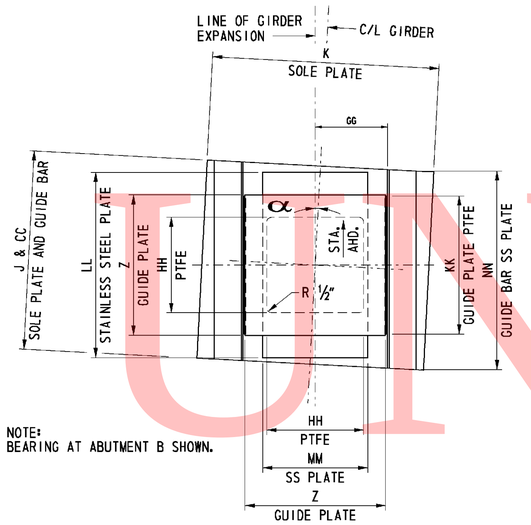

NOTE:
BEARING AT ABUTMENT B SHOWN.

SECTION A-A
NOT TO SCALE

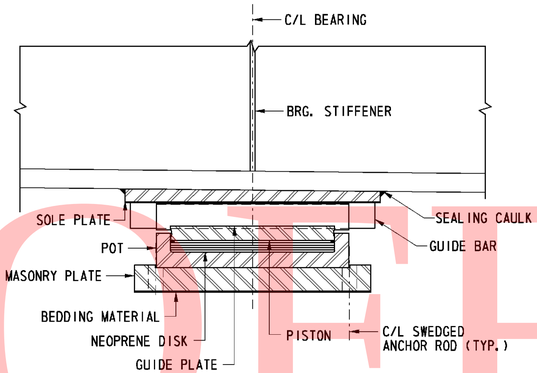

SIDE VIEW
NOT TO SCALE

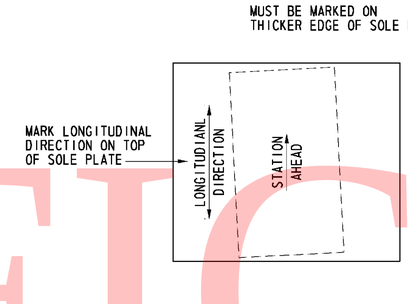

PLAN
SIDE VIEW
SOLE PLATE DETAIL
NOT TO SCALE

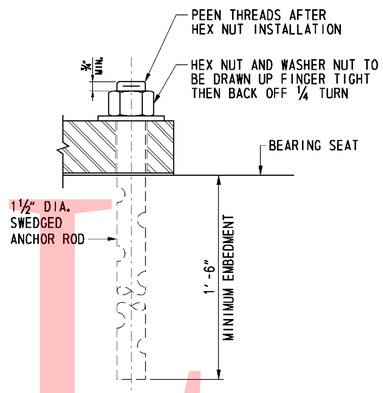

ANCHOR ROD DETAIL
NOT TO SCALE

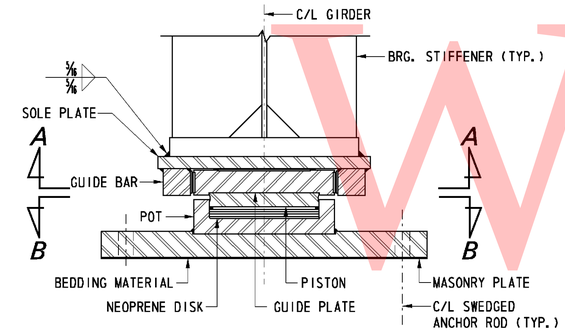

ELEVATION
NOT TO SCALE

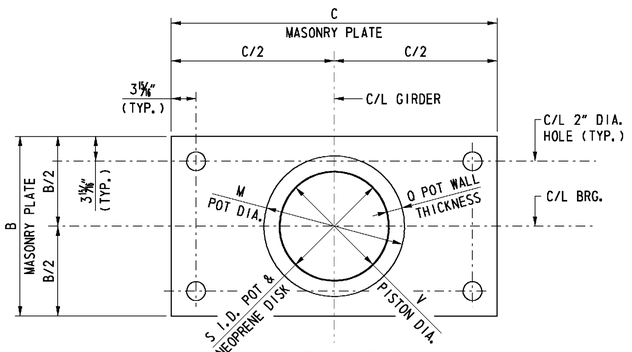

SECTION B-B
NOT TO SCALE

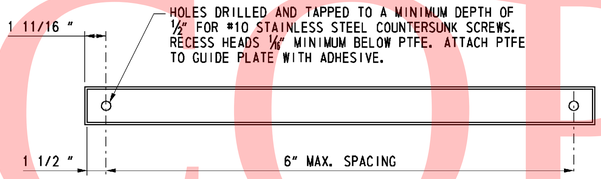

GUIDE PLATE PTFE DETAIL
NOT TO SCALE

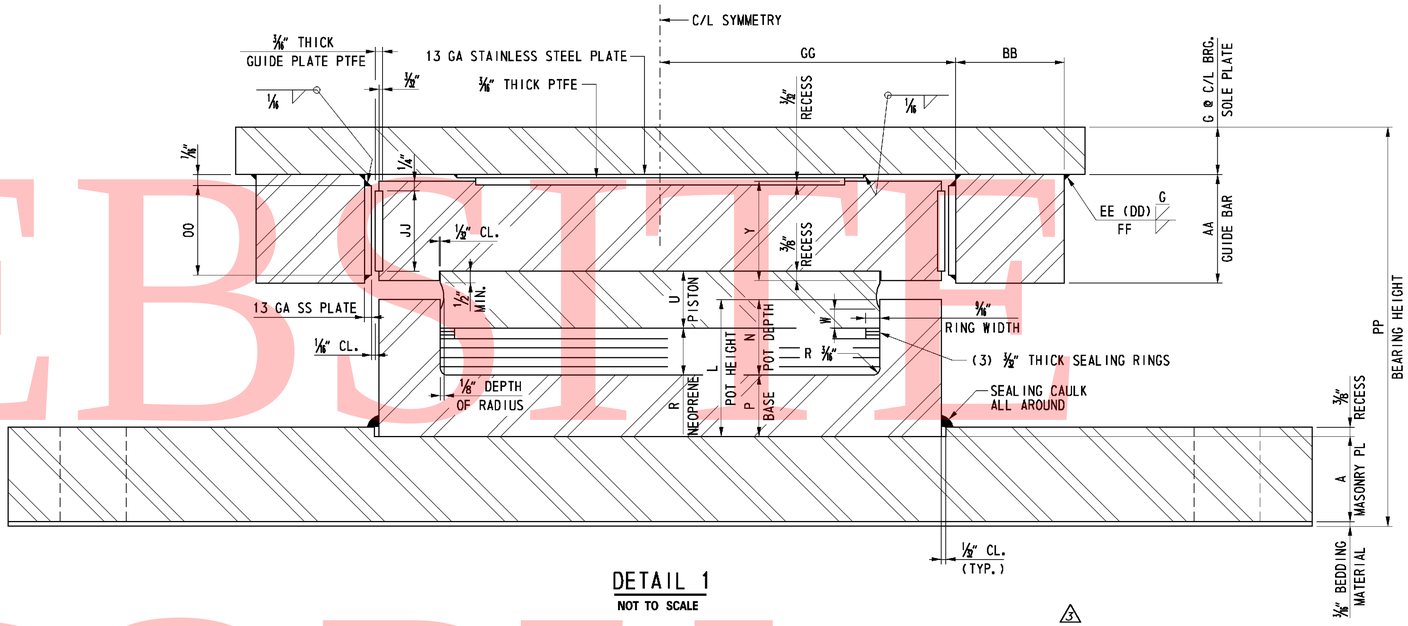

DETAIL 1
NOT TO SCALE

△3

LOCATION	SERVICE	STRENGTH		α	MASONRY PLATE			SOLE PLATE				
	VERTICAL LOAD (kips)	VERTICAL LOAD (kips)	HORIZONTAL LOAD (kips)		A	B	C	F	G	H	J	K
ABUTMENT A - G2-G3	350	450	100	5°51'12" RT	2½"	19"	37½"	100	1⅜"	1¹⁵⁄₁₆"	24"	27"
ABUTMENT B - G2-G3	350	450	100	5°25'41" LT	2½"	19"	37½"	100	1⅜"	1¹⁵⁄₁₆"	24"	27"
PIER 1 - G2 - G3	1500	2200	450	2°56'25" RT	3¹⁵⁄₁₆"	33⅜"	56⅞"	4¼"	2"	1¹³⁄₁₆"	35¼"	43⅜"
PIER 3 - G2 - G3	1500	2200	450	2°56'25" LT	3¹⁵⁄₁₆"	33⅜"	56⅞"	4¼"	2"	1¹³⁄₁₆"	35¼"	43⅜"

LOCATION	POT					NEOPRENE DISC		PISTON			GUIDE PLATE	
	L	M	N	P	Q	R	S	U	V	W	Y	Z
ABUTMENT A - G2-G3	3⅝"	14⅞"	2"	100	1⅝"	1¼"	11⅝"	1½"	11.585	½"	2⅝"	14⅞"
ABUTMENT B - G2-G3	3⅝"	14⅞"	2"	100	1⅝"	1¼"	11⅝"	1½"	11.585	½"	2⅝"	14⅞"
PIER 1 - G2 - G3	5¼"	30⅜"	3⅛"	⅜"	3⅜"	2⅜"	23⅝"	2⅝"	23.585	1"	4¹³⁄₁₆"	30⅜"
PIER 3 - G2 - G3	5¼"	30⅜"	3⅛"	⅜"	3⅜"	2⅜"	23⅝"	2⅝"	23.585	1"	4¹³⁄₁₆"	30⅜"

LOCATION	GUIDE BARS							PTFE			STAINLESS STEEL				* BEARING HEIGHT
	AA	BB	CC	DD	EE	FF	GG	HH	JJ	KK	LL	MM	NN	OO	PP
ABUTMENT A - G2-G3	2⅞"	2⅞"	24"	5⅛"	⅞"	⅝"	7.684	10⅛"	2⅛"	14⅝"	21⅝"	11⅛"	23¾"	2⅝"	10⁵⁄₁₆"
ABUTMENT B - G2-G3	2⅞"	2⅞"	24"	5⅛"	⅞"	⅝"	7.684	10⅛"	2⅛"	14⅝"	21⅝"	11⅛"	23¾"	2⅝"	10⁵⁄₁₆"
PIER 1 - G2 - G3	5⅛"	5⅛"	35¼"	¾"	⅞"	¾"	15.465	20¾"	4⅜"	30⅛"	35⅛"	21¾"	35⅛"	4⅝"	16¹⁵⁄₁₆"
PIER 3 - G2 - G3	5⅛"	5⅛"	35¼"	¾"	⅞"	¾"	15.465	20¾"	4⅜"	30⅛"	35⅛"	21¾"	35⅛"	4⅝"	16¹⁵⁄₁₆"

* BEARING HEIGHT INCLUDES ⅛" BEDDING MATERIAL.
BEARING HEIGHT MEASURED AT C/L BEARING

DELAWARE DEPARTMENT OF TRANSPORTATION

ADDENDUMS / REVISIONS	
ADDENDUM NO. △3, ADDED ORIENTATION	
ANGLE, 02/18/11, DWD	

SR1 / I-95 INTERCHANGE

CONTRACT	BRIDGE NO.	1-268B
28-090-03	DESIGNED BY:	RMB
COUNTY	CHECKED BY:	DWD
NEW CASTLE		

RAMP B OVER I-95NB
GUIDED EXPANSION BEARING DETAILS

S6-39
SHEET NO. 486
TOTAL SHTS. 803

2/16/2011 4:58:02 PM
M:\PROJECTS\2003\D3059_DELTRNPK\SR1_MALL\PHASE III CONSTRUCTION SERVICES\ADDENDUM 3\CADD WORKING DRAWINGS\BD02_BR-S6_SR1.DGN

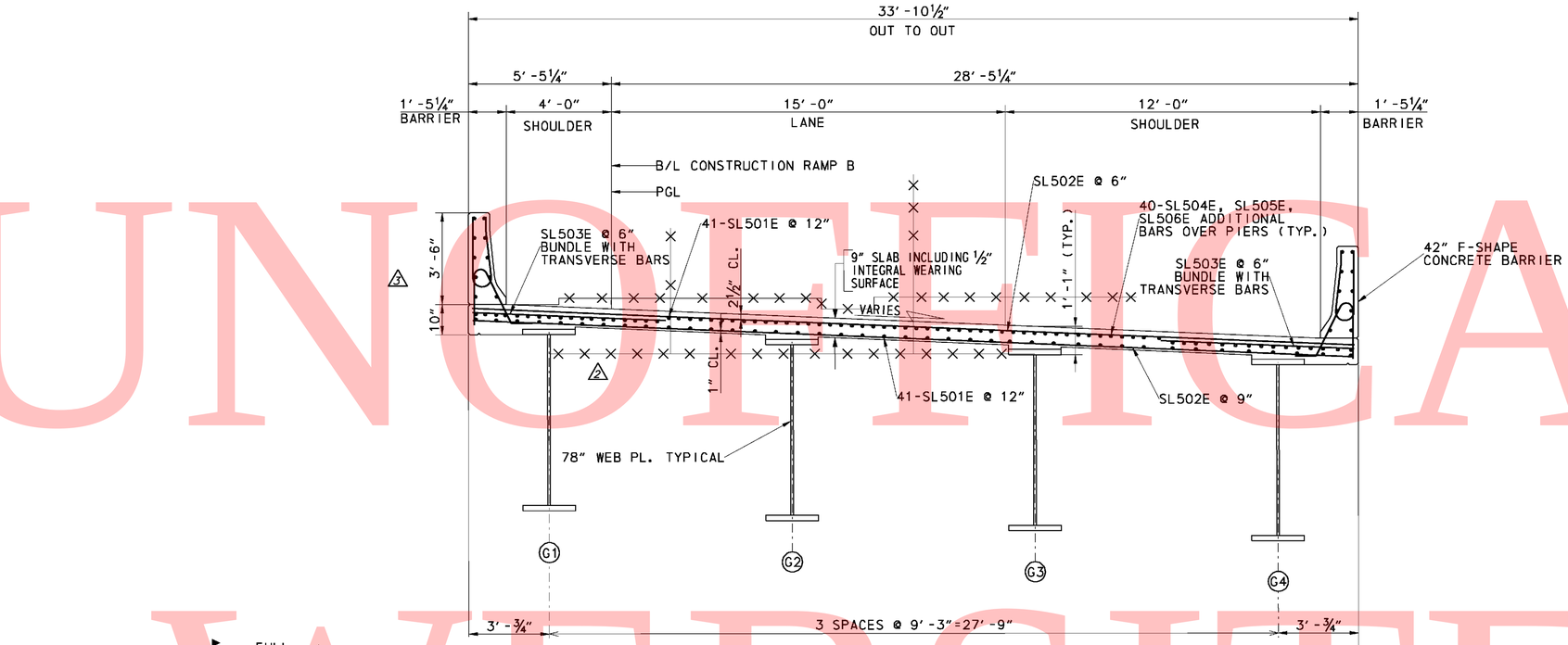

TYPICAL SECTION - RAMP B OVER I-95NB

SCALE: ⅜" = 1'-0"

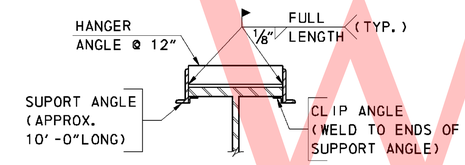

TENSION FLANGE FOR SIP FORMS

SCALE: NTS

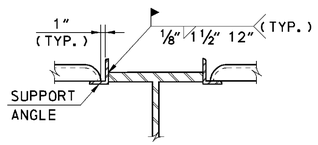

COMPRESSION FLANGE FOR SIP FORMS

SCALE: NTS

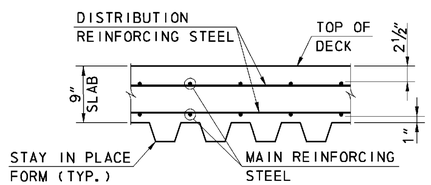

STEEL FORM SECTION

SCALE: NTS

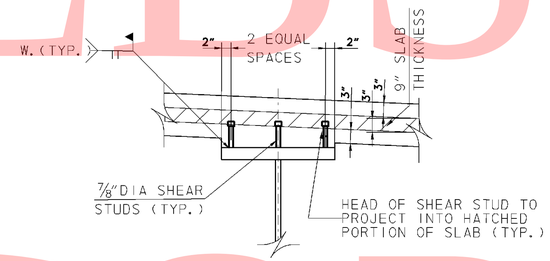

SHEAR STUD DETAIL

SCALE: NTS

NOTE: SIP FORM DETAILS NOT SHOWN

0 2 4 8

SCALE: ⅜"=1'-0"

UNOFFICIAL WEBSITE COPY

1/26/2011 8:48:41 AM
M:\PROJECTS\200.3\0.3059_DELTRNPK\SR1_MALL\CADD\2809003\PLANS.DOV\DK05_BR-S6_SR1.DGN

DELAWARE DEPARTMENT OF TRANSPORTATION

ADDENDUMS / REVISIONS	
ADDENDUM NO. 2, DELETED STRAY LINEWORK, 01/26/11, DWD	
ADDENDUM NO. 3, DIMENSIONS, 02/18/11, DWD	

SR1/I-95 INTERCHANGE

CONTRACT	28-090-03
COUNTY	NEW CASTLE
BRIDGE NO.	1-268B
DESIGNED BY:	RMB
CHECKED BY:	DWD

RAMP B OVER I-95NB DECK SECTIONS AND DETAILS

	S6-46
SHEET NO.	493
TOTAL SHTS.	803

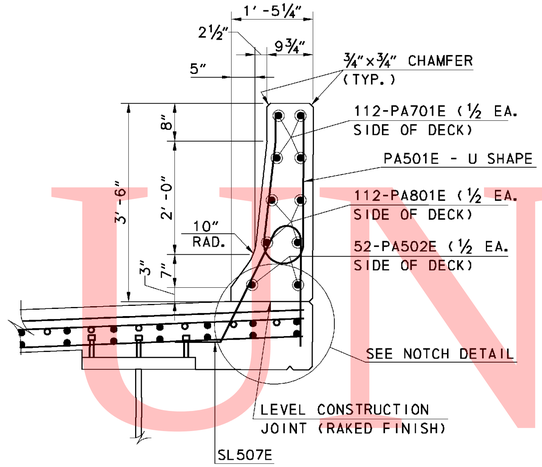

TYPICAL BARRIER REINFORCEMENT

SCALE: ¾"=1'-0"

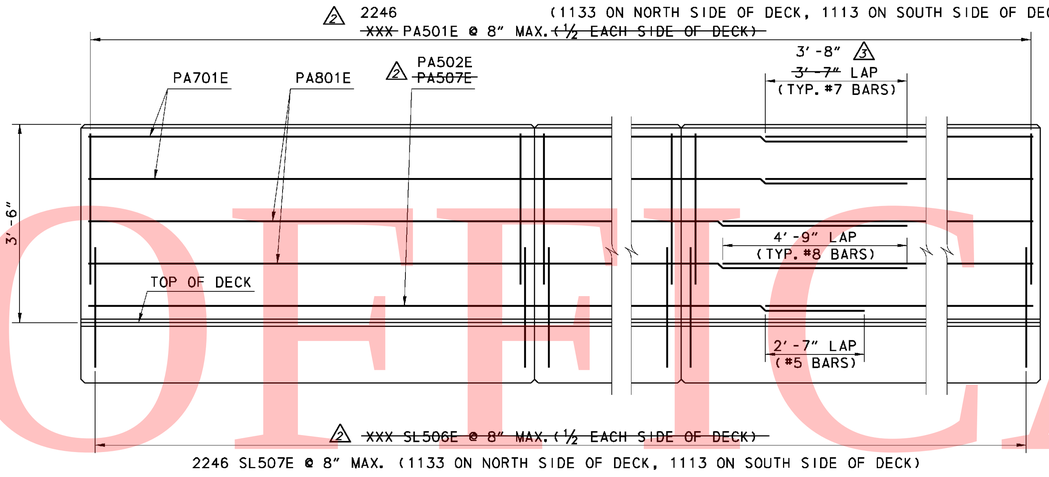

ELEVATION A-A - BRIDGE BARRIER

SCALE: ~~¾"=1'-0"~~ NOT TO SCALE 3

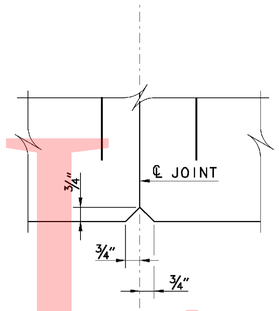

BARRIER CONTRACTION JOINT DETAIL

NO SCALE

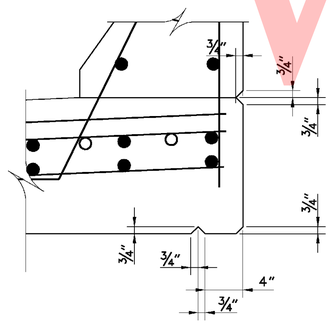

NOTCH DETAIL

SCALE: 1½"=1'-0"

CROSS REFERENCE NOTES:
1. FOR BARRIER CONTRACTION JOINT SPACING, SEE GENERAL PLAN & ELEVATION.

2. FOR TYPICAL DECK REINFORCING AND DETAILS, SEE SHEET S6-41.

0 1 4
.5 2

SCALE: ¾"=1'-0"

UNOFFICIAL WEBSITE COPY

S6-47

DELAWARE DEPARTMENT OF TRANSPORTATION

ADDENDUMS / REVISIONS	
ADDENDUM NO. 2, CHANGED SHEET TITLE,	02/18/11, DWD
UPDATED REINFORCING STEEL CALLOUTS, 01/26/11,	
DWD	
ADDENDUM NO. 3, LAP SPLICE LENGTH, SCALE,	

SR1 / I-95 INTERCHANGE

CONTRACT	28-090-03	BRIDGE NO.	1-268B
COUNTY	NEW CASTLE	DESIGNED BY:	MDM
		CHECKED BY:	DWD

RAMP B OVER I-95NB

2 ~~PARAPET DETAILS~~

BRIDGE BARRIER DETAILS

SHEET NO.	494
TOTAL SHTS.	803

2/16/2011 5:27:44 PM
M:\PROJECTS\2003\03059_DELTRNPK\SR1_MALL\CADD\2809003\PLANS.DGV\PA01_BR-S6_SR1.DGN

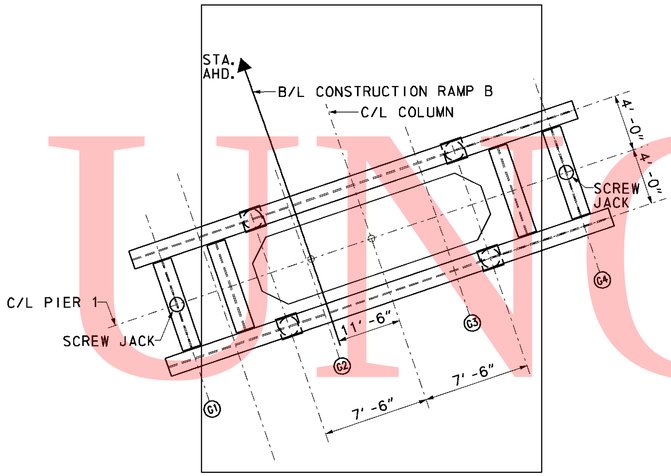

PIER 1 - TEMPORARY SHORING PLAN

SCALE: 1/4" = 1'-0"

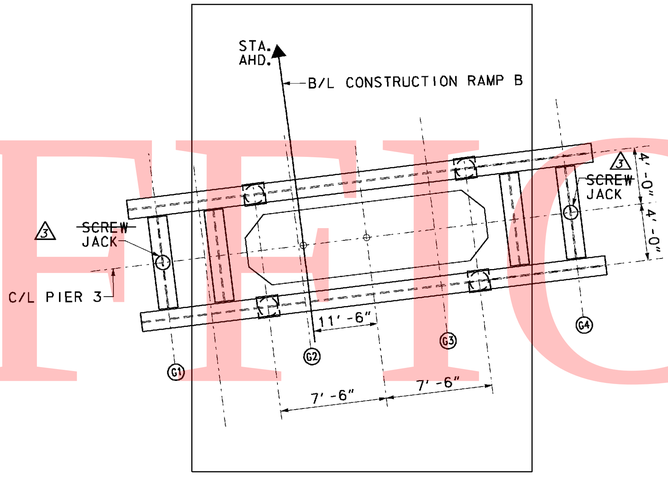

PIER 3 - TEMPORARY SHORING PLAN

SCALE: 1/4" = 1'-0"

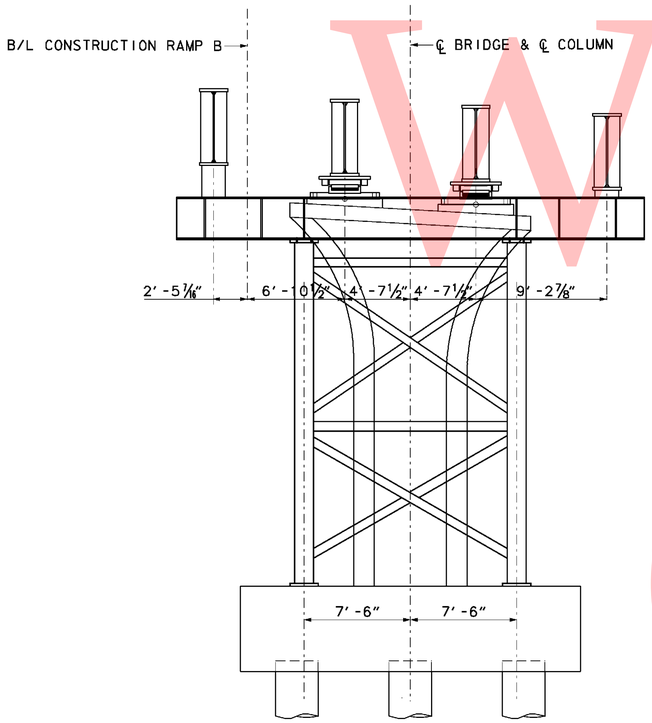

PIER ELEVATION

SCALE: 1/4" = 1'-0"

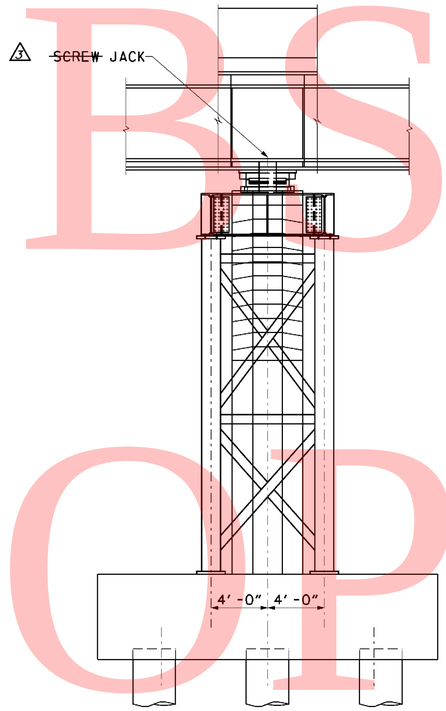

END VIEW

SCALE: 1/4" = 1'-0"

NOTES:

1. MAXIMUM UNFACTORED GIRDER REACTION AT PIER 1 SHORES IS 452K.
2. MAXIMUM UNFACTORED GIRDER REACTION AT PIER 3 SHORES IS 380K.
3. GIRDER REACTIONS INCLUDE WEIGHT OF STRUCTURAL STEEL FRAMING, DECK AND INTEGRAL CAP.
4. STEEL ERECTION SHOWN, SHORING TO REMAIN IN PLACE UNTIL DECK AND INTEGRAL CAP HAVE BEEN PLACED AND POST-TENSIONING FORCE APPLIED.
5. SHORING GIRDERS SHALL BE CAMBERED TO ACCOUNT FOR DEAD LOAD DEFLECTIONS.
6. ACTUAL SHORING TOWERS PROVIDED SHALL BE DESIGNED BY THE CONTRACTOR. SHOP DRAWINGS AND CALCULATIONS SIGNED AND SEALED BY A PROFESSIONAL ENGINEER REGISTERED IN THE STATE OF DELAWARE SHALL BE SUBMITTED FOR APPROVAL.

UNOFFICAL WEBSITE COPY

2/16/2011 4:58:21 PM
M:\PROJECTS\2003\03059_DELTRNPK\SR1_MALL\PHASE III\CONSTRUCTION SERVICES\ADDENDUM 3\CADD WORKING DRAWINGS\CS01_BR-S6_SR1.DGN

DELAWARE
DEPARTMENT OF TRANSPORTATION

ADDENDUMS / REVISIONS	
ADDENDUM NO. 3, CALLOUT, 02/18/11, DWD	

SR1 / I-95 INTERCHANGE

CONTRACT	BRIDGE NO.	1-268B	RAMP B OVER I-95NB
28-090-03	DESIGNED BY:	DWD	TEMPORARY SHORING
COUNTY	CHECKED BY:		
NEW CASTLE			

S6-56

SHEET NO.	TOTAL SHTS.
503	803

GENERAL NOTES:

1. DESIGN SPECIFICATIONS
   AASHTO LRFD BRIDGE DESIGN SPECIFICATIONS, 2007, 4TH EDITION WITH ALL CURRENT REVISIONS
   DELAWARE DEPARTMENT OF TRANSPORTATION BRIDGE DESIGN MANUAL
   ANSI/AASHTO/AWS D1.5 BRIDGE WELDING CODE.
2. LOADING
   UNIT WEIGHTS OF MATERIALS ARE IN ACCORDANCE WITH THE DELAWARE DESIGN MANUAL. FUTURE OVERLAY ALLOWANCE IS 25 PSF. STEEL BRIDGE DECK FORMS WHICH STAY IN PLACE (INCLUDING CONCRETE IN FORM CORRUGATIONS) IS 15 PSF. VEHICLE LIVE LOAD IS HL-93, WHICH CONSISTS OF A DESIGN TRUCK OR TANDEM WITH DYNAMIC LOAD ALLOWANCE AND A LANE LOAD RATING, WILL USE ALL DELAWARE LEGAL LOADS SPECIFIED IN THE BRIDGE DESIGN MANUAL. FATIGUE DESIGN SHALL BE BASED ON THE FOLLOWING ONE DIRECTIONAL TRAFFIC VOLUMES:
   DESIGN YEAR 2030 ADT = 74,443, DESIGN ADTT = 6,700
   FOR THERMAL LOADS, CONSIDER THE MODERATE TEMPERATURE RANGE AS STIPULATED IN THE AASHTO LRFD DESIGN SPECIFICATIONS. THE NORMAL TEMPERATURE IS CONSIDERED TO BE 60F. FOR SEISMIC LOADS, THE PROJECT SITE IS LOCATED WITHIN SEISMIC PERFORMANCE ZONE 2, WITH AN ACCELERATION COEFFICIENT=0.1, SOIL PROFILE TYPE II AND IMPORTANCE CATEGORY - ESSENTIAL.
3. PORTLAND CEMENT CONCRETE
   PORTLAND CEMENT CONCRETE FOR CAST-IN-PLACE ELEMENTS SHALL BE AS FOLLOWS:
   (28 DAY COMPRESSIVE STRENGTH)
   ~~ITEM NO. 602001 (CLASS A, F'C=4500 PSI) - ABUTMENT~~
   ~~ITEM NO. 602007 (CLASS A, F'C=4500 PSI) - PIER ABOVE FOOTING~~ △3
   ITEM NO. 602013 (CLASS D, F'C=4500 PSI) - DECK, INTERMADIATE/END/CONTINUITY DIAPHRAGM
   ITEM NO. 602014 (CLASS D, F'C=4500 PSI) - APPROACH SLAB
   ITEM NO. 602017 (CLASS A, F'C=4500 PSI) - PARAPET
   MIX REQUIREMENTS SHALL CONFORM TO SECTION 812 OF THE DELAWARE DEPARTMENT OF TRANSPORTATION STANDARD SPECIFICATIONS. ALL EXPOSED CORNERS OF CONCRETE SHALL BE CHAMFERED WITH 3/4" X 3/4" MILLED CHAMFER STRIPS UNLESS NOTED OTHERWISE, EXCEPT ON UNEXPOSED FOOTINGS OR WHERE INDICATED BY THE NOTATION ON THE PLANS, "DO NOT CHAMFER". NO SLIP-FORMING OF PARAPETS IS PERMITTED.
4. BAR REINFORCEMENT
   REINFORCING STEEL SHALL CONFORM TO AASHTO M31 (ASTM A615), GRADE 60. ALL REINFORCING STEEL SHALL HAVE A CLEAR COVER OF 2" UNLESS OTHERWISE SPECIFIED ON THE PLANS. EPOXY COATED REINFORCING STEEL SHALL CONFORM TO AASHTO M284 (ASTM D3963), AND IS DENOTED WITH A SUFFIX "E" IN THE BAR MARKS. EPOXY COATED REINFORCING STEEL IS USED IN THE FOLLOWING LOCATIONS:
   APPROACH SLABS
   DECK SLAB
   PARAPETS AND BARRIERS
   BEARING SEAT PADS
   ABUTMENT BEARING SEAT REGIONS
   ABUTMENT BACKWALLS
   PARAPET PORTION OF WINGWALLS
   DO NOT WELD GRADE 60 REINFORCING STEEL.

   ITEM NO. 602717 (CLASS A, F'C=4500 PSI) - ABUTMENT, BACKWALL, PIER △3

GENERAL NOTES CONT'D:

5. SERVICEABILITY
   LIVE LOAD DEFLECTION SHALL BE LIMITED TO L/800. FOR REINFORCEMENT DISTRIBUTION REQUIREMENTS, CONSIDER CLASS 2 EXPOSURE CRITERIA. ACCOMODATION TO JACK GIRDERS FOR FUTURE BEARING REPLACEMENT SHALL BE CONSIDERED IN THE DESIGN.
6. CONSTRUCTION JOINTS
   KEYED CONSTRUCTION JOINTS SHALL BE 2"X4" OR AS NOTED. ALL EXPOSED CONSTRUCTION JOINT EDGES SHALL HAVE A 3/4" V-NOTCH.
7. SHEETING AND SHORING
   SHORING SHALL BE REQUIRED FOR ANY EXCAVATION EXCEEDING FIVE (5) FEET IN HEIGHT, THE COST OF SHORING SHALL BE PAID UNDER ITEM NO. 207501. IN LIEU OF SHORING, THE CONTRACTOR MAY USE A 2:1 CUT SLOPE. NO PAYMENT SHALL BE MADE FOR ADDITIONAL EXCAVATION OR FILL OUTSIDE THE LIMITS AS DEFINED IN SECTION 207 OF THE STANDARD SPECIFICATIONS.
8. EXISTING STRUCTURES
   ALL DIMENSIONS AFFECTED BY THE GEOMETRICS AND/OR LOCATION OF EXISTING STRUCTURES SHALL BE CHECKED IN THE FIELD BY THE CONTRACTOR BEFORE ANY CONSTRUCTION IS DONE, AND BEFORE ANY REINFORCING STEEL, ETC., IS ORDERED OR FABRICATED. IT SHALL BE THE RESPONSIBILITY OF THE CONTRACTOR TO SUPPLY THE ENGINEER WITH ALL FIELD DIMENSIONS REQUIRED TO CHECK DETAIL DRAWINGS. THE + MARKS SHOWN WITH DIMENSIONS DO NOT INDICATE ANY DEGREE OF PRECISION. THESE MARKS (+) INDICATE EXISTING DIMENSIONS THAT MAY VARY AND DO REQUIRE FIELD VERIFICATION BY THE CONTRACTOR.

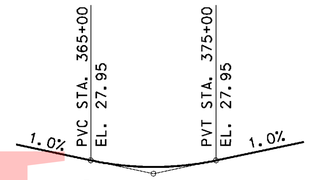

PVI STA. 370+00
EL. 22.95
VC=1000'

SR 1 (NB) PROFILE

NOT TO SCALE

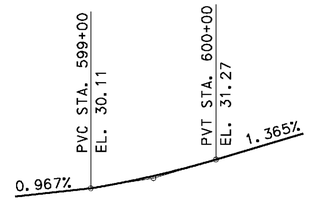

PVI STA. 599+50
EL. 30.59
VC=100'

SR 7 (NB) PROFILE

NOT TO SCALE

UNOFFICIAL WEBSITE COPY

2/25/2011 3:29:43 PM
M:\PROJECTS\2003\03059_DELTRNPK\SR1MALL\CADD\2809003\PLANS\PN01_BR-S8_SR1.DGN

DELAWARE DEPARTMENT OF TRANSPORTATION	ADDENDUMS / REVISIONS		SR1 / I-95 INTERCHANGE	CONTRACT 28-090-03	BRIDGE NO. 331N	SR1 OVER EAGLE RUN PROFILES AND GENERAL NOTES	S8-2 SHEET NO.
	ADDENDUM NO. △3, MODIFIED NOTE, 02/18/11, DWD			COUNTY NEW CASTLE	DESIGNED BY: MDM		TOTAL SHTS. 514
					CHECKED BY:		803

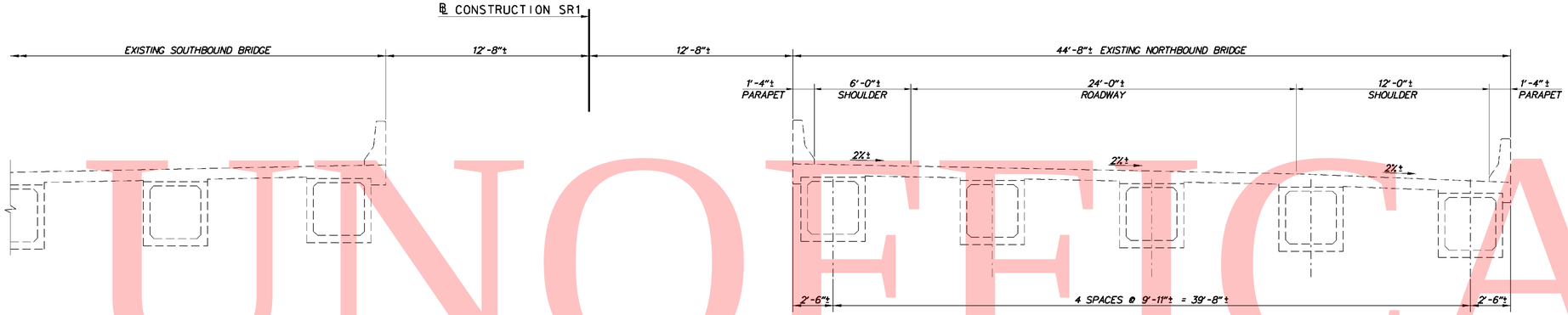

EXISTING CONDITION
SCALE: 1/4"=1'-0"

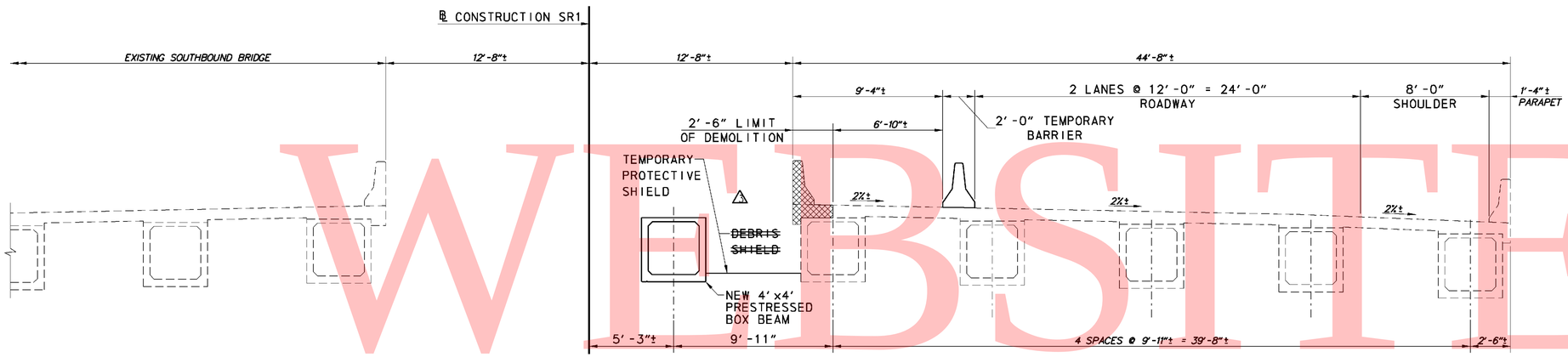

PHASE 1 CONSTRUCTION
SCALE: 1/4"=1'-0"

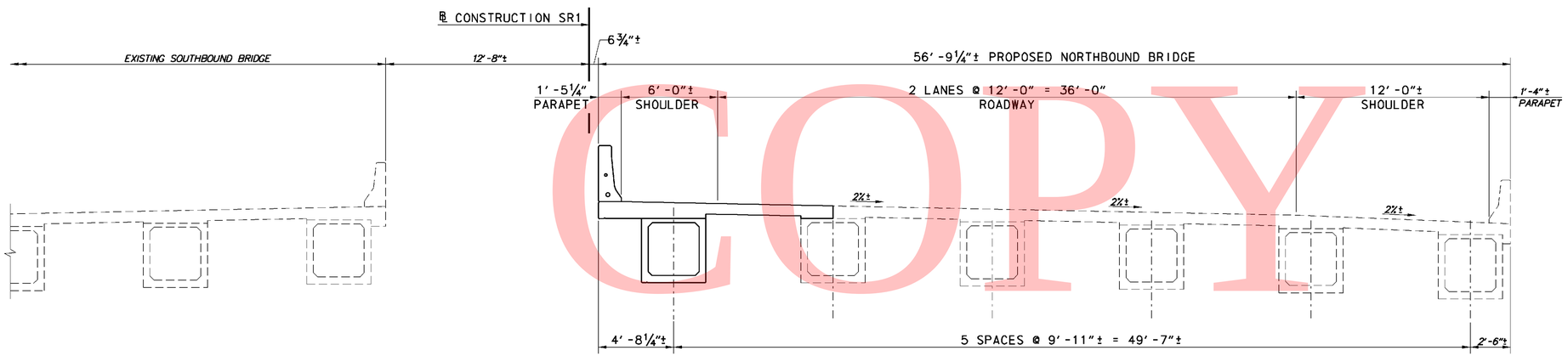

FINAL CONDITION
SCALE: 1/4"=1'-0"

LEGEND

DEMOLITION

CROSS REFERENCE NOTES:
1. FOR TYPICAL SECTION, SEE SHEET S8-3.
2. FOR ABUTMENT DEMOLITION DETAILS, SEE SHEET S8-5.
3. FOR ABUTMENT CONSTRUCTION DETAILS, SEE SHEET S8-6.
4. FOR BENT CONSTRUCTION DETAILS, SEE SHEET S8-7.
5. FOR FRAMING PLAN, SEE SHEET S8-9.

0 2 8
1 4
SCALE: 1/4"=1'-0"

UNOFFICAL WEBSITE COPY

2/25/2011 1:58:05 PM
M:\PROJECTS\2003\03059_DELTRNPK\SR1MALL\CADD\2809003\PLANS\CS01_BR-S8_SR1.DGN

DELAWARE
DEPARTMENT OF TRANSPORTATION

ADDENDUMS / REVISIONS	
ADDENDUM NO. 1, REVISED NOTE, 02/18/11, DWD	

SR1 / I-95 INTERCHANGE

CONTRACT	BRIDGE NO.	331N
28-090-03	DESIGNED BY:	MDM
COUNTY	CHECKED BY:	
NEW CASTLE		

SR1 OVER EAGLE RUN
CONSTRUCTION SEQUENCE

S8-4	
SHEET NO.	516
TOTAL SHTS.	803

UNOFFICIAL WEBSITE COPY

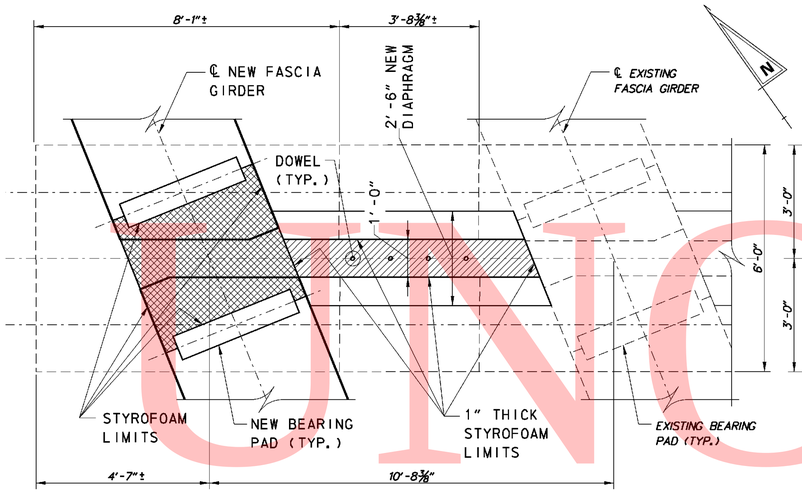

BENT 1 - PLAN

SCALE: ½"=1'-0"

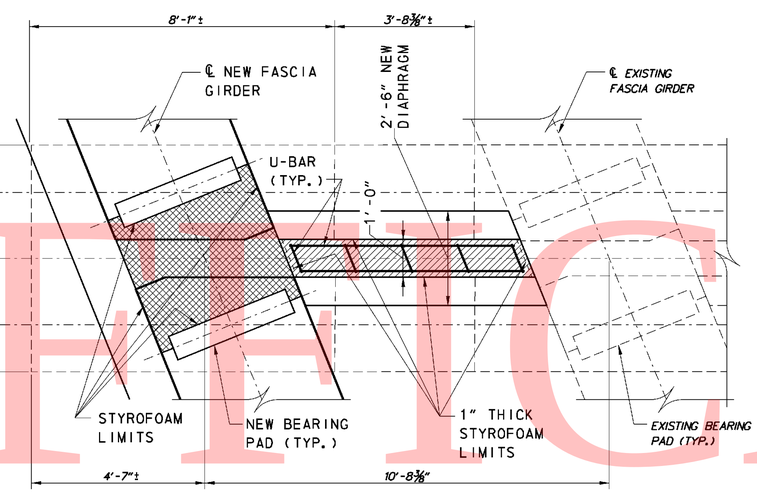

BENT 2 - PLAN

SCALE: ½"=1'-0"

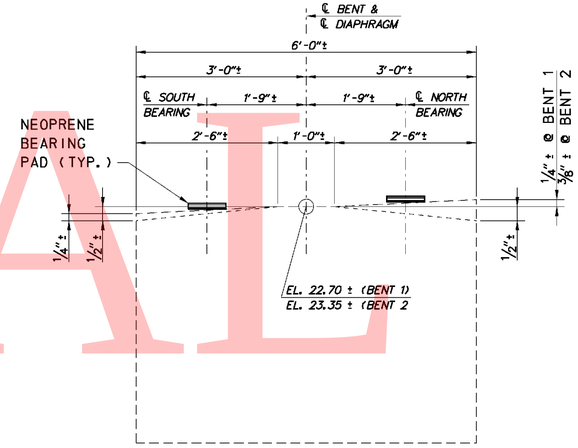

TYPICAL SECTION AT NEW GIRDER

N.T.S.

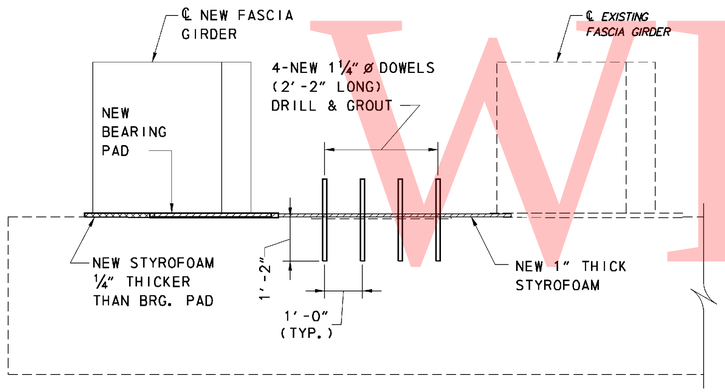

BENT 1 - ELEV

SCALE: ½"=1'-0"

NOTE: DIAPHRAGM NOT SHOWN.

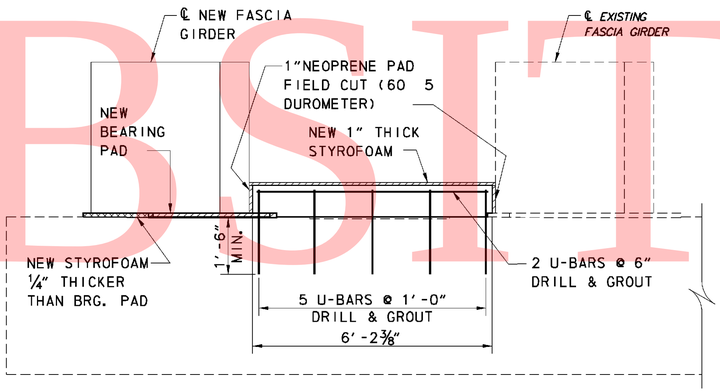

BENT 2 - ELEV

SCALE: ½"=1'-0"

NOTE: DIAPHRAGM NOT SHOWN.

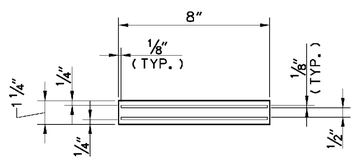

BENT 1

BEARING PAD NOTES:
1. NEOPRENE BEARING PADS HAVE A SURFACE AREA OF 8"x40" (50 DUROMETER).
2. BEARING PADS LOCATED ON BENT 1 ARE 1 ¼" THICK.
3. BEARING PADS LOCATED ON BENT 2 ARE 1 ⅞" THICK.
4. ALL BEARING PADS ARE NORMAL TO ℄ GIRDERS.
△3 5. BEARING PADS LOCATED ON ABUTMENT 1 AND 2 ARE 1⅞" THICK.

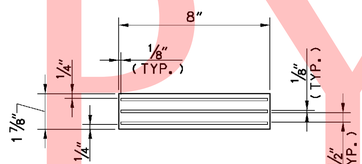

BENT 2, ABUTMENTS 1 & 2 △3

BEARING PAD - TYPICAL SECTION

SCALE: 3"=1'-0"

CROSS REFERENCE NOTES:
1. FOR SEQUENCE OF CONSTRUCTION, SEE SHEET S8-4.
2. FOR FRAMING PLAN, SEE SHEET S8-9.
3. FOR GIRDER DETAILS, SEE SHEETS S8-10 AND S8-11.
4. FOR DIAPHRAGM DETAILS, SEE SHEET S8-12.

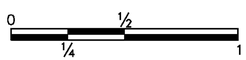

SCALE: 3"=1'-0"

SCALE: ½"=1'-0"

DELAWARE DEPARTMENT OF TRANSPORTATION	ADDENDUMS / REVISIONS		SR1 / I-95 INTERCHANGE	CONTRACT 28-090-03	BRIDGE NO. 331N	SR1 OVER EAGLE RUN BENTS CONSTRUCTION DETAILS	S8-7
	ADDENDUM NO. △3, LABELED ABUTMENT BEARING PAD, NOTE, 02/18/11, DWD			COUNTY NEW CASTLE	DESIGNED BY: MDM		SHEET NO. 519
					CHECKED BY:		TOTAL SHTS. 803

2/25/2011 2:04:37 PM
M:\PROJECTS\2003\03059_DELTRNPK\SRMALL\CADD\2809003\PLANS\PR01_BR-S8_SR1.DGN

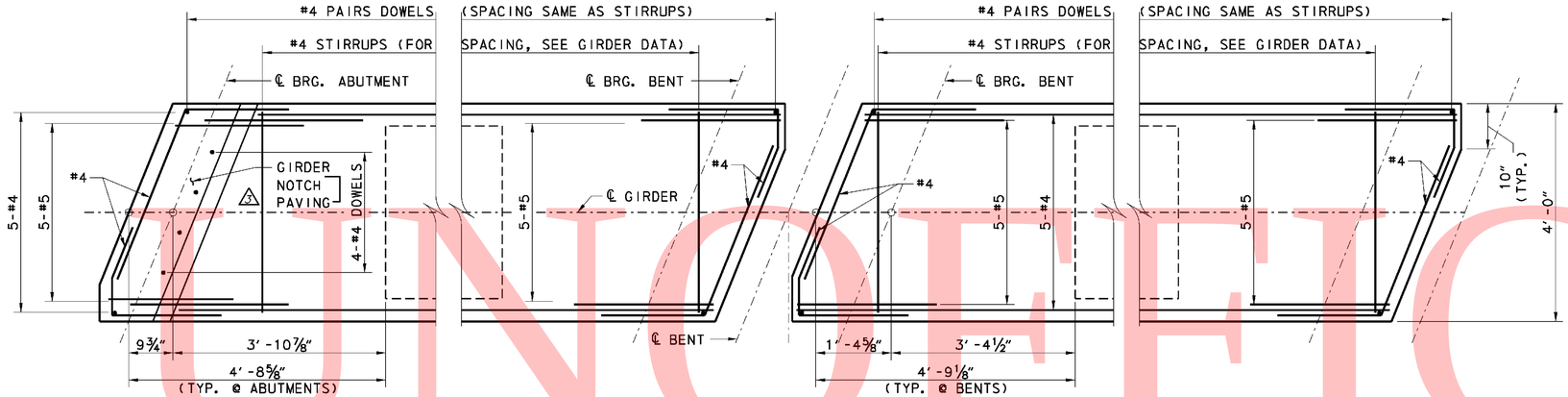

PLAN

PLAN

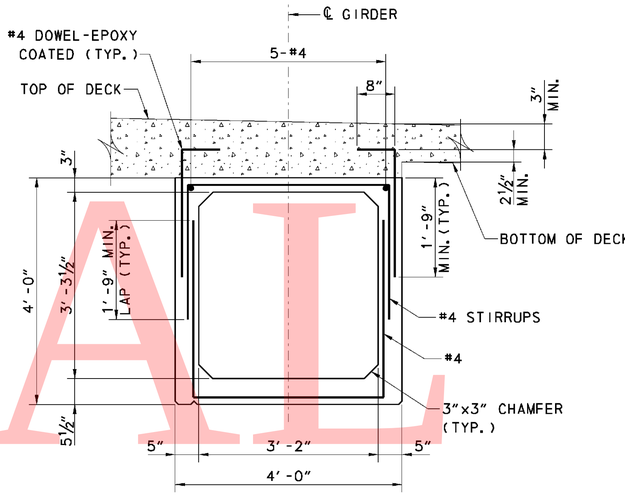

TYPICAL GIRDER SECTION

SCALE: ¾" = 1'-0"

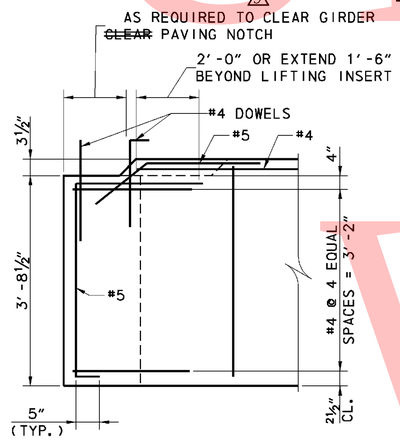

ELEVATION

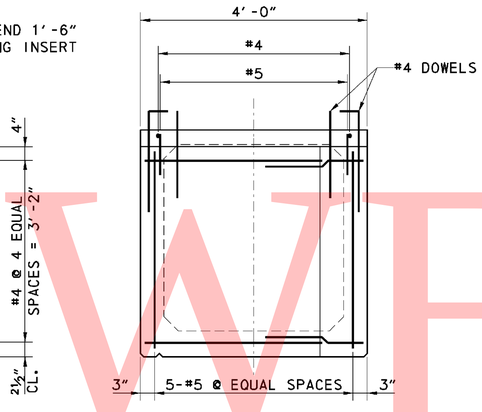

END VIEW - ABUTMENT

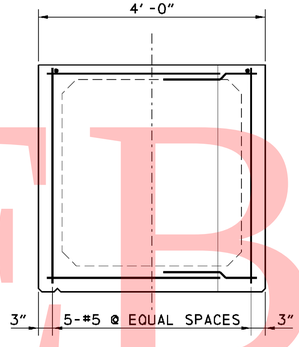

END VIEW - BENT

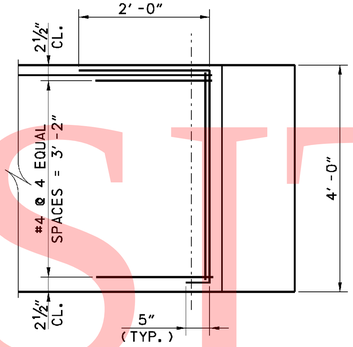

ELEVATION

NOTE: DRIP NOTCH IS ON FASCIA SIDE ONLY.

GIRDER REINFORCEMENT SPANS 1 & 3

SCALE: ¾" = 1'-0"

GIRDER REINFORCEMENT SPAN 2

SCALE: ¾" = 1'-0"

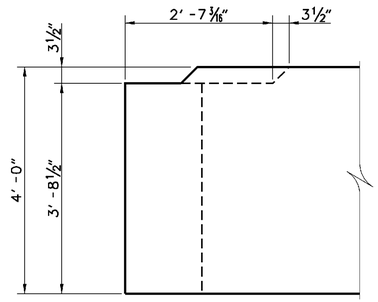

GIRDER PAVING NOTCH DETAIL

SCALE: ¾" = 1'-0"

CROSS REFERENCE NOTES:
1. FOR GENERAL NOTES AND PROFILES, SEE SHEET S8-2.
2. FOR TYPICAL SECTION, SEE SHEET S8-3.
3. FOR FRAMING PLAN, SEE SHEET S8-9.
4. FOR GIRDER DATA, SEE SHEET S8-10.
5. FOR DIAPHRAGM DETAILS, SEE SHEET S8-12.

0 1 4
½ 2
SCALE: ¾"=1'-0"

UNOFFICIAL WEBSITE COPY

2/25/2011 2:13:47 PM
M:\PROJECTS\2003\03059_DELTRNPK\SR1MALL\CADD\2809003\PLANS\BM02_BR-S8_SR1.DGN

DELAWARE DEPARTMENT OF TRANSPORTATION

ADDENDUMS / REVISIONS	
ADDENDUM NO. 2, EDITED NOTE, 02/18/11, DWD	

SR1 / I-95 INTERCHANGE

CONTRACT	28-090-03	
COUNTY	NEW CASTLE	
BRIDGE NO.	331N	
DESIGNED BY:	MDM	
CHECKED BY:		

SR1 OVER EAGLE RUN
GIRDER DETAILS - 2

S8-11	
SHEET NO.	523
TOTAL SHTS.	803

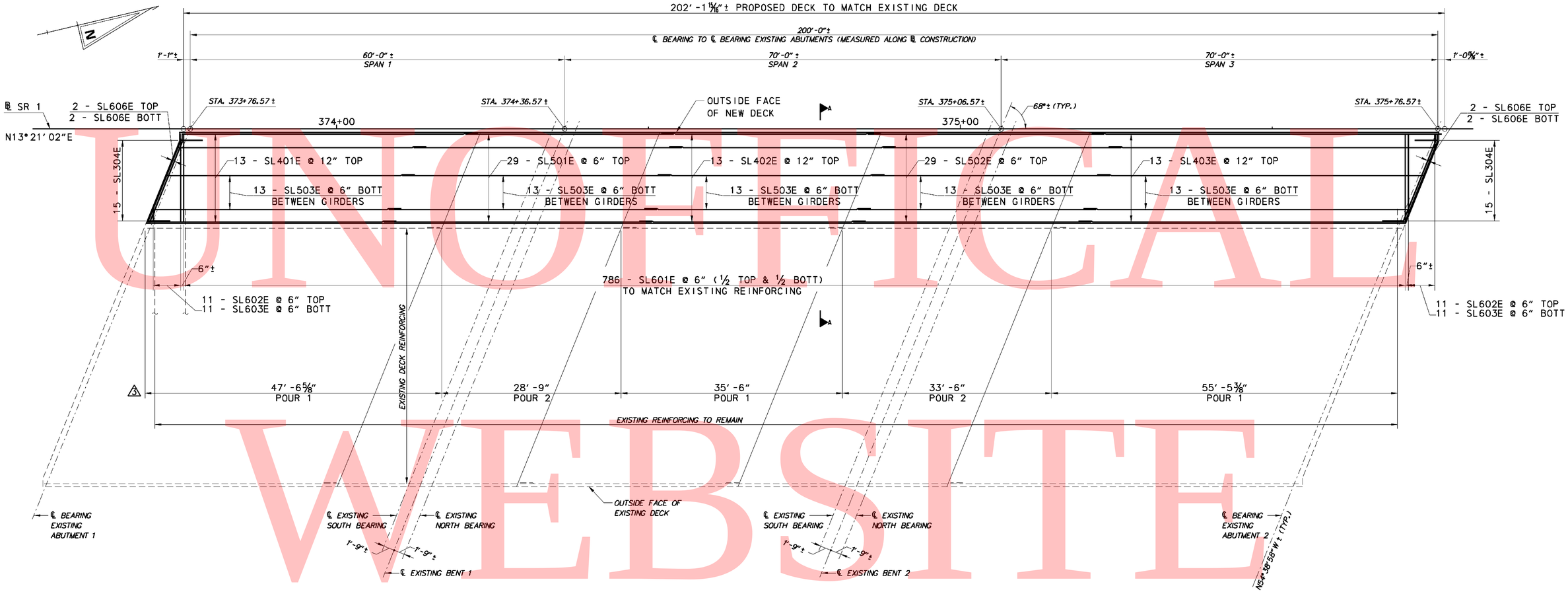

DECK REINFORCING PLAN

SCALE: 1/8″=1′-0″

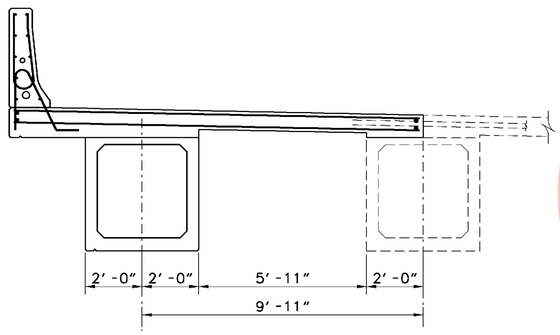

DECK SECTION A-A

SCALE: 3/8″ = 1′-0″

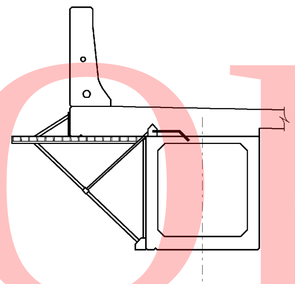

OVERHANG FORM SCHEMATIC DETAIL

N. T. S.

CROSS REFERENCE NOTES:
1. FOR TYPICAL SECTION, SEE SHEET S8-3.
2. FOR FRAMING PLAN, SEE SHEET S8-9.
3. FOR PARAPET DETAILS, SEE SHEET S8-14.

0 2 4 8 16

SCALE: 1/8″=1′-0″

0 1 2 4 8

SCALE: 3/8″=1′-0″

UNOFFICIAL WEBSITE COPY

2/25/2011 2:23:46 PM
M:\PROJECTS\2003\03059_DELTRNPK\SRTMALL\CADD\2809003\PLANS\DK01_BR-S8_SR1.DGN

DELAWARE DEPARTMENT OF TRANSPORTATION

ADDENDUMS / REVISIONS	
ADDENDUM NO. 3, DIMENSION AND POUR SEQUENCE, 02/18/11, DWD	

SR1 / I-95 INTERCHANGE

CONTRACT	28-090-03	BRIDGE NO.	331N
COUNTY	NEW CASTLE	DESIGNED BY:	MDM
		CHECKED BY:	

SR1 OVER EAGLE RUN DECK REINFORCING PLAN & DETAILS

SHEET NO.	S8-13
TOTAL SHTS.	525
	803

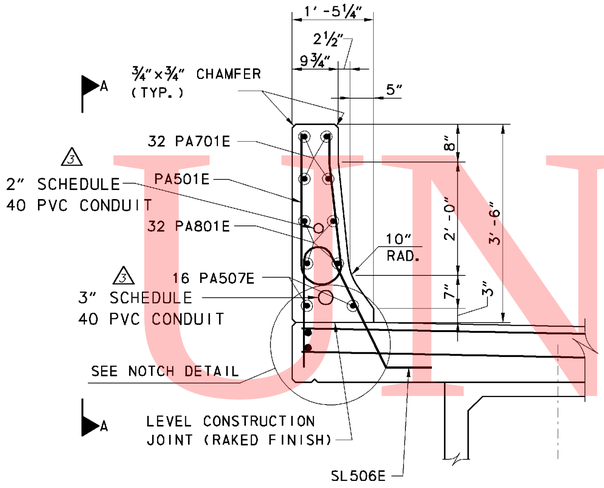

TYPICAL BARRIER REINFORCEMENT

SCALE: ¾″=1′-0″

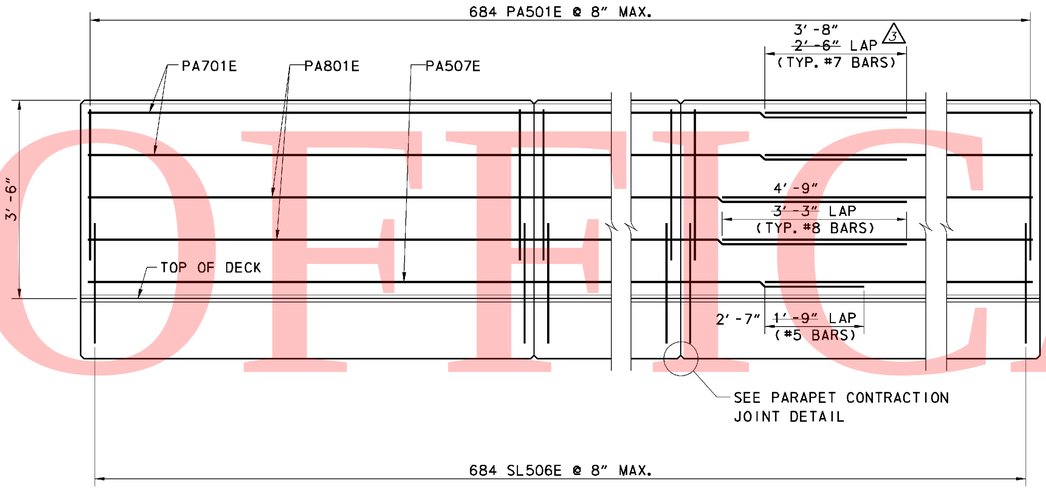

ELEVATION A-A - BRIDGE PARAPET

3 SCALE: ~~¾″=1′-0″~~ NOT TO SCALE

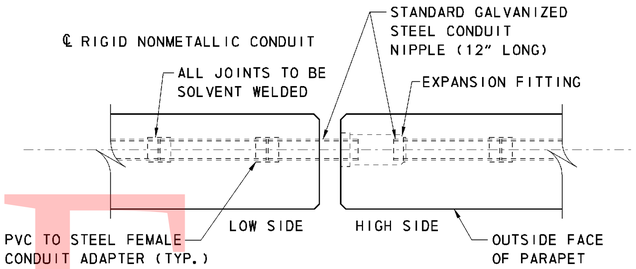

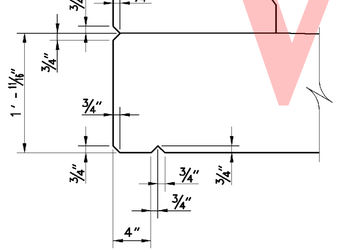

NOTCH DETAIL

NO SCALE

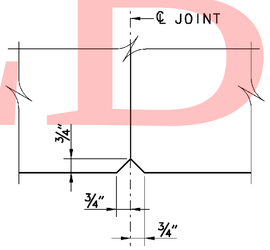

PARAPET CONTRACTION JOINT DETAIL (ELEVATION)

NO SCALE

NOTES:
1. PLACE EXPANSION JOINT IN PIPE CONDUIT AND PARAPET AT EVERY EXPANSION JOINT AT SUPPORTS IN BRIDGE DECK.
2. #10 GALVANIZED PULL WIRE TO BE PROVIDED FOR FULL LENGTH OF CONDUIT AND LEFT IN PLACE.
3. ALL PIPE AND EXPANSION JOINTS MUST BE U.L. APPROVED FOR ENCASEMENT IN CONCRETE.
4. FITTINGS TO BE PVC, EXCEPT FOR EXPANSION JOINT.
5. FOR CONDUIT SIZE SEE TYPICAL BARRIER REINFORCEMENT DETAIL, THIS SHEET.
6. NO BONDING JUMPER CABLE IS REQUIRED.

PARAPET EXPANSION JOINT DETAIL (PLAN)

NO SCALE

3

CROSS REFERENCE NOTES:
1. FOR GENERAL PLAN AND ELEVATION, SEE SHEET S8-1.
2. FOR DECK REINFORCING PLAN AND DETAILS, SEE SHEET S8-13.

0 1 4
.5 2
SCALE: ¾″=1′-0″

UNOFFICIAL WEBSITE COPY

2/25/2011 3:06:20 PM
M:\PROJECTS\2003\03059_DELTRNPK\SRIMALL\CADD\2809003\PLANS\PA01_BR-S8_SR1.DGN

DELAWARE DEPARTMENT OF TRANSPORTATION

ADDENDUMS / REVISIONS
ADDENDUM NO. 3, CHANGED SCALE, REV. DIM., ADDED CONDUIT CALLOUT, ADDED PARAPET EXP. JOINT DETAIL, 02/18/11, DWD

SR1 / I-95 INTERCHANGE

CONTRACT	BRIDGE NO.	331N
28-090-03	DESIGNED BY:	MDM
COUNTY	CHECKED BY:	
NEW CASTLE		

SR1 OVER EAGLE RUN PARAPET DETAILS

SHEET NO.	TOTAL SHTS.
S8-14	526 / 803

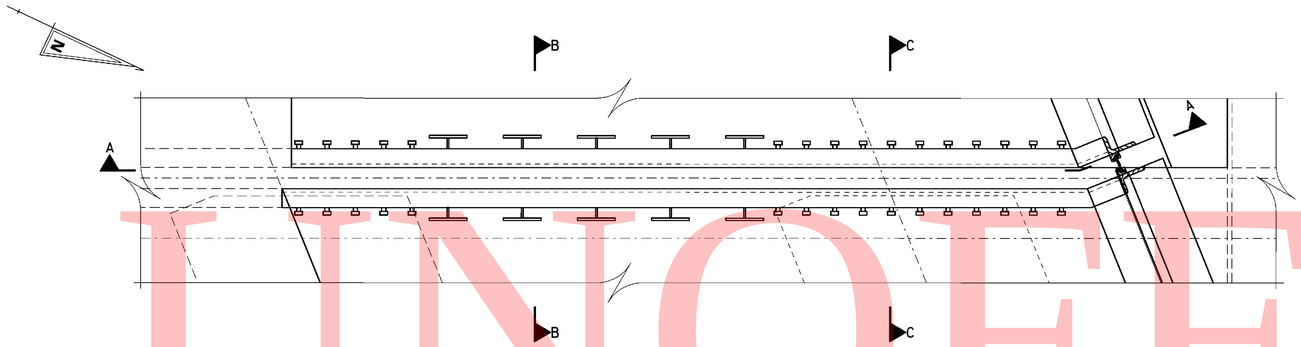

ABUTMENT JOINT PLAN
SCALE: ¾"=1'-0"

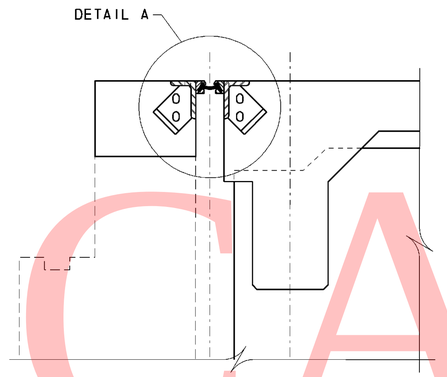

SECTION B-B (AT DIAPHRAGM)
SCALE: 1"=1'-0"

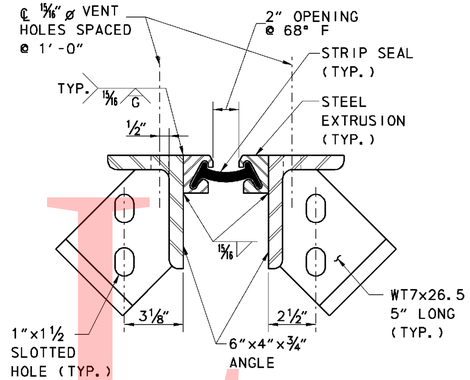

DETAIL A
SCALE: 3"=1'-0"

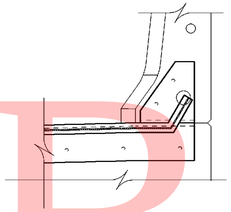

SECTION A-A
SCALE: 1 1/2"=1'-0"

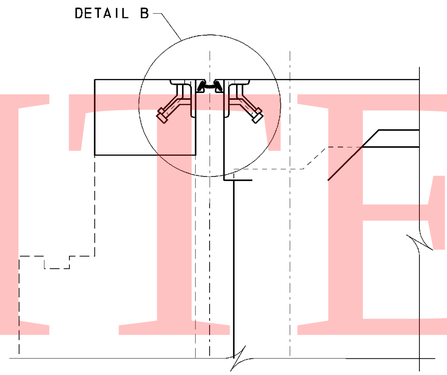

SECTION C-C (AT GIRDER)
SCALE: 1"=1'-0"

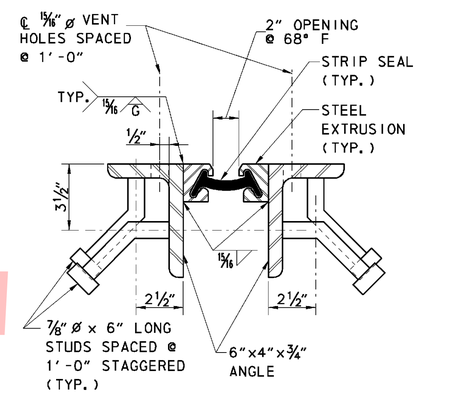

DETAIL B
SCALE: 3"=1'-0"

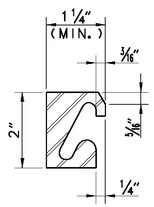

STEEL EXTRUSION DETAIL
NO SCALE

STRIP SEAL DETAIL
NO SCALE

NOTES:
1. ALL STEEL SHAPES, BOLTS, STRIP SEALS AND APPURTENANCES SHALL BE PAID FOR UNDER STRIP SEAL EXPANSION JOINTS, ≇". 2"
2. JOINT ASSEMBLY MAY BE BURNED TO ALLOW TRANSVERSE DECK REINFORCING TO PASS THROUGH.
3. REMOVE EXISTING STRIP SEALS AT BOTH ABUTMENTS. PROVIDE NEW STRIP SEAL TO ACCOUNT FOR EXISTING AND WIDENED WIDTH OF BRIDGE AT BOTH ABUTMENTS. CONTRACTOR TO MEASURE AND VERIFY IN FIELD. △3

CROSS REFERENCE NOTES:
1. FOR GENERAL PLAN AND ELEVATION, SEE SHEET S8-1.
2. FOR GENERAL NOTES AND PROFILES, SEE SHEET S8-2.
3. FOR TYPICAL SECTION, SEE SHEET S8-3.
4. FOR ABUTMENT CONSTRUCTION DETAILS, SEE SHEET S8-6.
5. FOR FRAMING PLAN, SEE SHEET S8-9.
6. FOR PARAPET DETAILS, SEE SHEET S8-14.

0 1/2 1 2 4
SCALE: ¾"=1'-0"

0 1/2 1 2
SCALE: 1"=1'-0"

0 1/4 1/2 1
SCALE: 3"=1'-0"

UNOFFICIAL WEBSITE COPY

DELAWARE DEPARTMENT OF TRANSPORTATION	ADDENDUMS / REVISIONS		SR1 / I-95 INTERCHANGE	CONTRACT 28-090-03	BRIDGE NO. 331N	SR1 OVER EAGLE RUN EXPANSION JOINT DETAILS	S8-16
				COUNTY NEW CASTLE	DESIGNED BY: MDM		SHEET NO. 528
					CHECKED BY:		TOTAL SHTS. 803

2/25/2011 2:51:18 PM
M:\PROJECTS\2003\03059_DELTRNPK\SRIMALL\CADD\2809003\PLANS\EX01_BR-S8_SR1.DGN

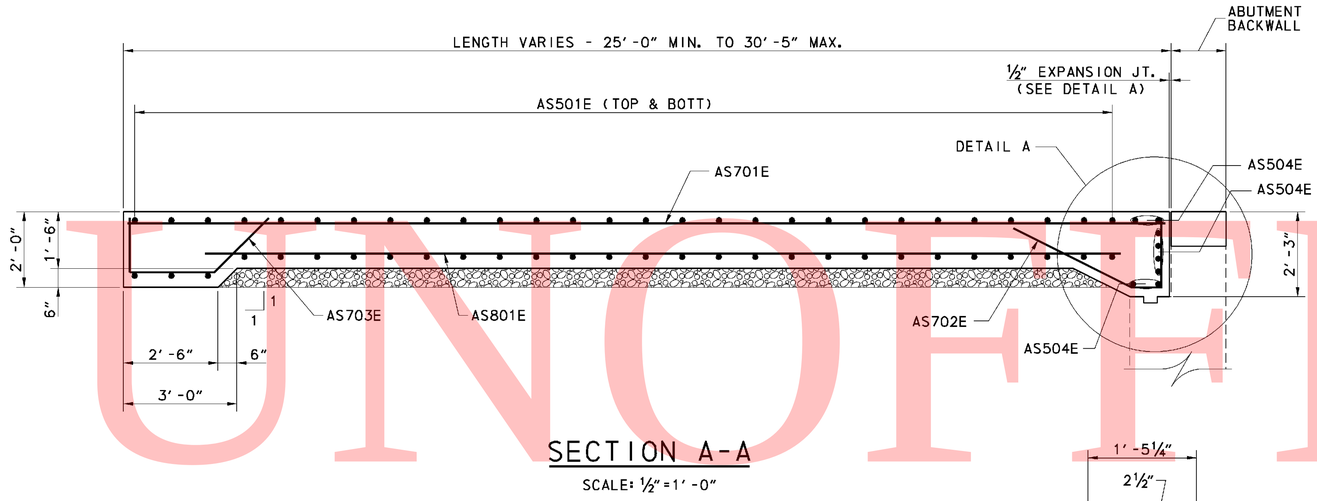

SECTION A-A

SCALE: ½"=1'-0"

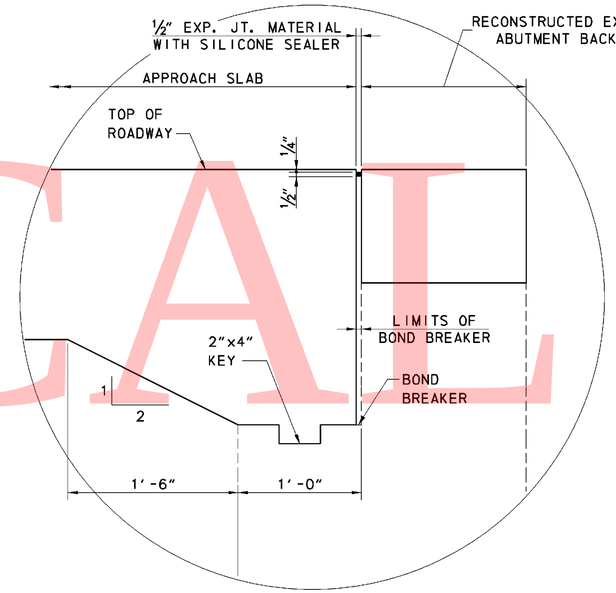

DETAIL A

SCALE: 1½"=1'-0"

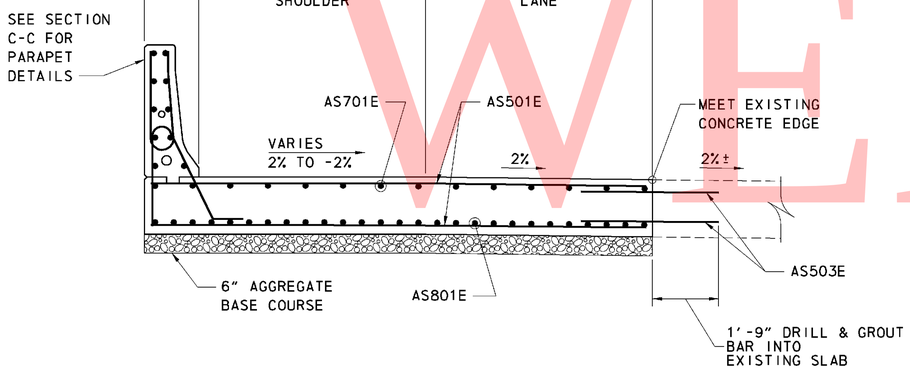

SECTION B-B

SCALE: ½"=1'-0"

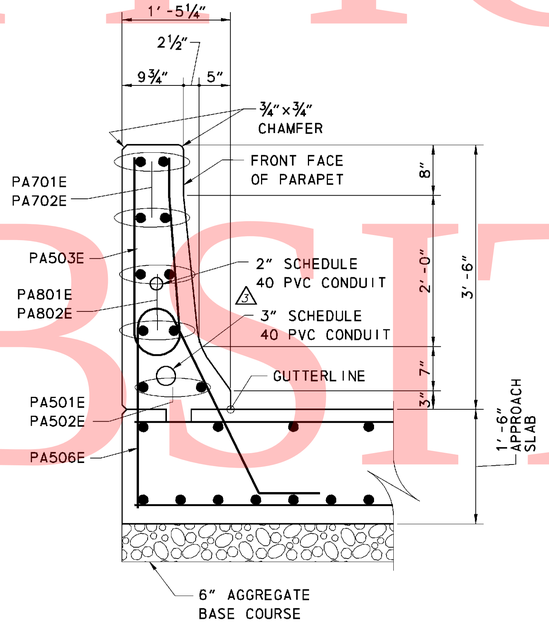

SECTION C-C

SCALE: 1"=1'-0"

NOTES:

△3 1. REFER TO SPECIAL PROVISION 745532 AND 745534 FOR MATERIAL SPECIFICATIONS FOR 3" AND 2" SCHEDULE 40 PVC CONDUIT. PAYMENT FOR 3" AND 2" SCHEDULE 40 PVC CONDUIT SHALL BE INCIDENTAL TO ITEM 602017 PORTLAND CEMENT CONCRETE MASONRY, PARAPET, CLASS A.

CROSS REFERENCE NOTES:

1. FOR ABUTMENT CONSTRUCTION DETAILS, SEE SHEET S8-6.
2. FOR APPROACH SLAB PLANS, SEE SHEET S8-17.
3. FOR APPROACH SLAB REINFORCING PLANS, SEE SHEET S8-18.

0 1 ½ 2
SCALE: 1½"=1'-0"

0 1 ½ 2
SCALE: 1"=1'-0"

0 1 4 ½ 2
SCALE: ½"=1'-0"

UNOFFICIAL WEBSITE COPY

DELAWARE DEPARTMENT OF TRANSPORTATION	ADDENDUMS / REVISIONS		SR1 / I-95 INTERCHANGE	CONTRACT 28-090-03	BRIDGE NO. 331N	SR1 OVER EAGLE RUN APPROACH SLABS SECTIONS & DETAILS	S8-19
	ADDENDUM NO. △3, ADDED NOTE, CONDUIT CALLOUT, 02/18/11, DWD			COUNTY NEW CASTLE	DESIGNED BY: MDM		SHEET NO. 531
					CHECKED BY:		TOTAL SHTS. 803

2/25/2011 2:52:57 PM
M:\PROJECTS\2003\03059_DELTRNPK\SRNMALL\CADD\2809003\PLANS\AS03_BR-S8_SR1.DGN

GENERAL NOTES

SPECIFICATIONS: PROPRIETARY MSE WALLS SHALL BE DESIGNED IN ACCORDANCE WITH THE FOLLOWING:
- AASHTO LRFD BRIDGE DESIGN SPECIFICATIONS, 4TH EDITION WITH ALL CURRENT REVISIONS.
- FEDERAL HIGHWAY ADMINISTRATION PUBLICATION NOS. FHWA-NHI-10-024 AND FHWA-NHI-025, "DESIGN AND CONSTRUCTION OF MECHANICALLY STABILIZED EARTH WALLS AND REINFORCED SOIL SLOPES", VOLUME I AND VOLUME II.

CONCRETE DESIGN SHALL BE PERFORMED USING THE LOAD AND RESISTANCE FACTOR DESIGN METHOD.

CONCRETE: ALL CONCRETE FOR ROADWAY BARRIERS SHALL BE 4,500 PSI. LEVELING PAD CONCRETE SHALL BE 3,500 PSI. MIX REQUIREMENTS SHALL CONFORM TO SECTION 812 OF THE DELAWARE DEPARTMENT OF TRANSPORTATION STANDARD SPECIFICATIONS.

CHAMFERS: ALL EXPOSED CORNERS OF CONCRETE SHALL BE CHAMFERED WITH ¾" x ¾" MILLED CHAMFER STRIPS, UNLESS OTHERWISE NOTED, EXCEPT ON UNEXPOSED FOOTINGS OR WHERE INDICATED BY THE FOLLOWING NOTATION ON THE PLANS: "DO NOT CHAMFER".

REINFORCING STEEL: REINFORCING STEEL SHALL CONFORM TO ASTM A 615, GRADE 60. ALL SPLICES, NOT SHOWN, SHALL BE LAPPED AS PER THE LRFD BRIDGE DESIGN SPECIFICATIONS. MINIMUM COVER FOR ANY BAR SHALL BE 2" UNLESS OTHERWISE NOTED.

FOR TIES AND STIRRUPS, STANDARD ACI BENDING TOLERANCES ARE MODIFIED TO PLUS (+) ZERO INCHES, MINUS (-) NORMAL ACI BENDING TOLERANCE.

ONLY GRADE 60 CAN BE USED ON THIS PROJECT.

ALL REINFORCING STEEL IN THE BARRIER SHALL BE EPOXY COATED, AND SHALL CONFORM TO ASTM D3936.

ALL KEYS ARE NOMINAL SIZE.

THE MSE WALL MANUFACTURER MAY SUBSTITUTE ALTERNATE REINFORCING CONFIGURATIONS AND SUBMIT FOR APPROVAL.

EXPANSION AND CONTRACTION JOINTS: THE LOCATION OF THE EXPANSION AND CONTRACTION JOINTS IN THE BARRIER SHOWN ON THE PLANS MAY BE ADJUSTED TO ACCOMMODATE THE PANEL TYPE USED IN THE PROJECT. ANY CHANGE TO THESE JOINT LOCATIONS SHALL BE SUBMITTED TO THE ENGINEER FOR APPROVAL.

LEVELING PAD: THE PROPRIETARY WALL MANUFACTURER MAY RELOCATE THE LEVELING PAD STEPS AT THEIR DISCRETION PROVIDED THAT THE MINIMUM EMBEDMENT IS MAINTAINED. ANY CHANGE TO THE STEP LOCATIONS SHALL BE SUBMITTED TO THE ENGINEER FOR APPROVAL.

ROADWAY LIMITS: THE PROPRIETARY WALL MANUFACTURER SHALL ASSURE THAT PROPOSED PROPRIETARY WALL COMPONENTS ARE POSITIONED SUCH THAT THE DESIGNATED ROADWAY LIMITS ARE NOT ENCROACHED UPON.

TRAFFIC BARRIER JOINTS: TRAFFIC BARRIER FOOTING SHALL HAVE CONSTRUCTION JOINTS TO COINCIDE WITH THE BARRIER JOINTS.

COORDINATION: CONTRACTOR AND PROPRIETARY WALL MANUFACTURER SHALL COORDINATE LOCATIONS OF INLETS AND PIPES WITH LOCATIONS OF PROPRIETARY WALL TIE BACK SYSTEM.

ARCHITECTURAL FINISH: THE MSE WALL PANELS SHALL RECEIVE AN ARCHITECTURAL FINISH.

SERVICE LIFE: ALL RETAINING WALL COMPONENTS SHALL BE DESIGNED FOR A MINIMUM SERVICE LIFE OF 100 YEARS.

WALL SYSTEM: ONLY ONE MSE WALL SYSTEM MAY BE USED ON THIS PROJECT.

ROADWAY SUPERELEVATION: FOR ROADWAY SUPERELEVATION, SEE SUPERELEVATION TABLES.

MSE WALL BACKFILL: MSE WALL BACKFILL SHALL CONSIST OF SPECIFIED BACKFILL.

△2 PAY ITEMS: MECHANICALLY STABILIZED EARTH WALLS (602772)

~~△3 PCC MASONRY FOR MSE WALLS (602773)~~

BAR REINFORCEMENT. EPOXY COATED (604000)

△3 PCC MASONRY, PARAPET, CLASS A (602017)

SOIL PROPERTIES

SOIL TYPE	UNIT WEIGHT (PCF)	DRAINED ANGLE OF FRICTION (DEGREES)	UNDRAINED SHEAR (PSF)
SELECT FILL	125	34	-
FOUNDATION SOIL	105	28	1400

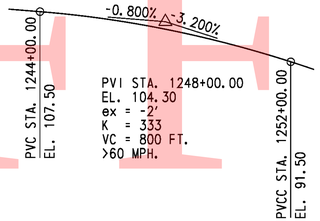

RAMP A
VERTICAL CURVE DATA
NOT TO SCALE

PI STA. 1254+08.88
△ = 48°19'31.68" LT
Dc = 3°05'49.45"
R = 1,850.0000'
T = 829.98'
L = 1,560.36'

RAMP A
HORIZONTAL CURVE NO. 14 DATA

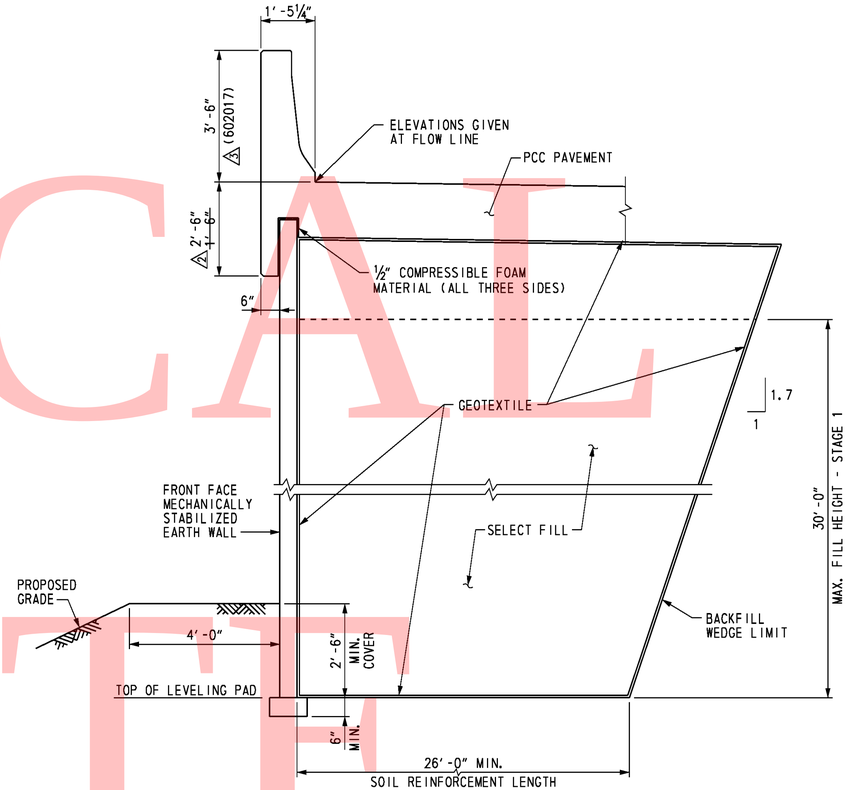

TYPICAL SECTION
SCALE: ½" = 1'-0"

FOUNDATION NOTES:

THE FACTORED BEARING RESISTANCE SHALL BE VERIFIED PRIOR TO CONSTRUCTION OF THE MSE WALL.

THE INTERNAL STABILITY OF THE MSE WALL SHALL BE DESIGNED BY THE CONTRACTOR USING THE SOIL PARAMETERS PROVIDED FOR EACH STRUCTURE LOCATION. THE INTERNAL STABILITY CALCULATIONS SHOULD BE SIGNED AND SEALED BY A PROFESSIONAL ENGINEER LICENSED IN THE STATE OF DELAWARE AS INDICATED IN THE PROJECT SPECIFICATIONS.

ISOLATED AREAS OF UNDERCUTTING OF EXISTING FILL MAY BE ENCOUNTERED DURING CONSTRUCTION OF THIS RETAINING WALL.

△2 A QUARANTINE PERIOD OF ~~APPROXIMATELY~~ THIRTY (30) DAYS IS REQUIRED AFTER CONSTRUCTION OF THE FULL HEIGHT OF THE MSE WALL IS ACHIEVED. THE ENGINEER SHALL APPROVE THE COMPLETION OF THE QUARANTINE PERIOD PRIOR TO CONSTRUCTION OF ANY PAVEMENT OR BARRIER. A TOTAL ESTIMTED SETTLEMENT OF APPROXIMATELY FOUR (4) INCHES IS ANTICIPATED.

UNOFFICIAL WEBSITE COPY

O:\20832687-XM\CAD\Bridge\rd01_RW1_sr1.dgn
2/10/2011
Steve_Lambert

DELAWARE DEPARTMENT OF TRANSPORTATION

ADDENDUMS / REVISIONS
- ADDENDUM NO. △2 REVISED FOUNDATION NOTES AND COPING
- DIMENSION, ADDED PAY ITEMS, 01/26/11, RFK
- ADDENDUM NO. △3 REV. PAY ITEMS, 02/18/11, RFK

SR1 / I-95 INTERCHANGE

CONTRACT 28-090-03
COUNTY NEW CASTLE
BRIDGE NO.
DESIGNED BY: R. F. KIRCHNER
CHECKED BY: J. S. LI

RETAINING WALL 1
GENERAL NOTES AND TYPICAL SECTION

R1-1
SHEET NO. 533
TOTAL SHTS. 803

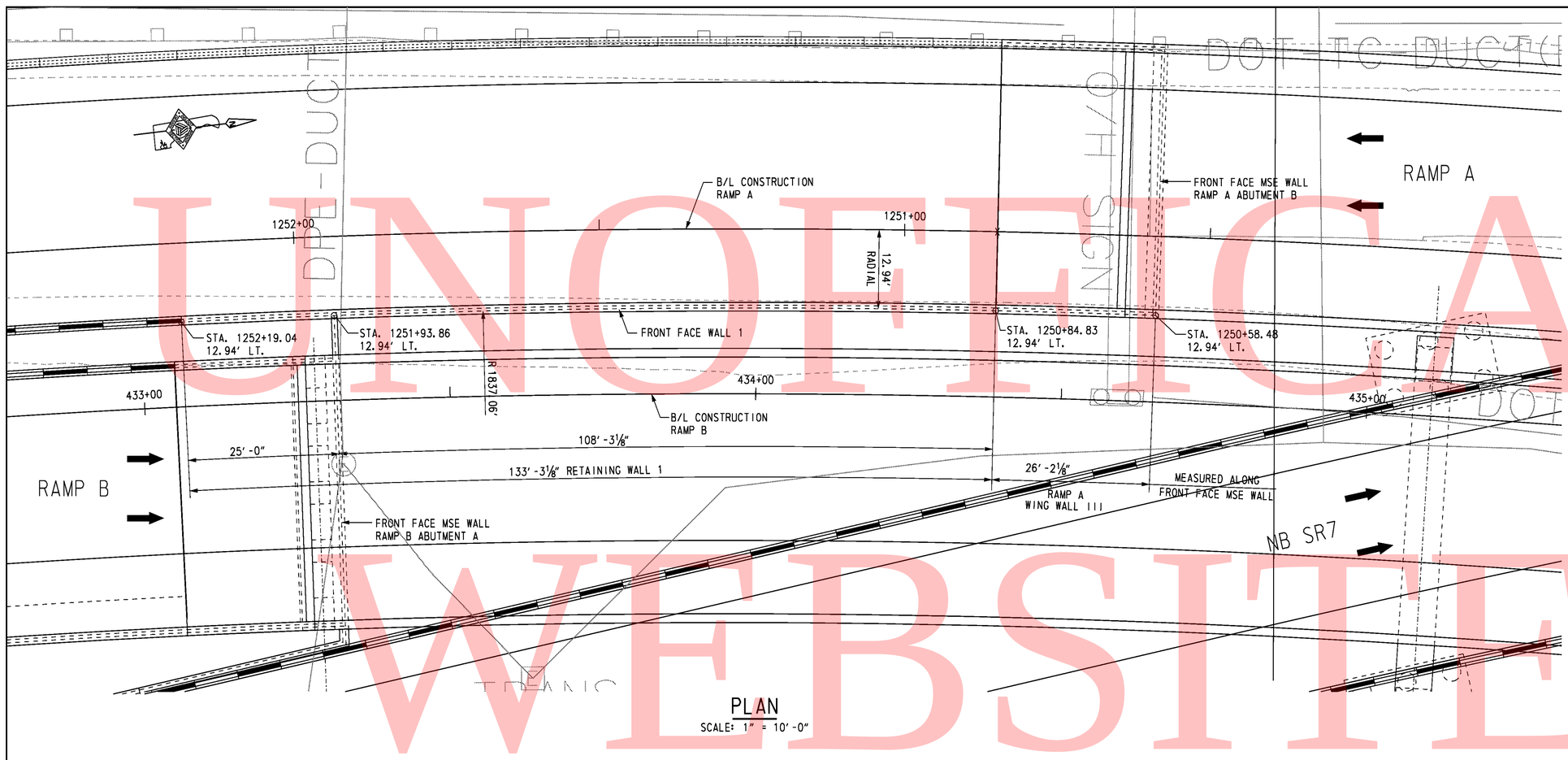

PLAN

SCALE: 1" = 10'-0"

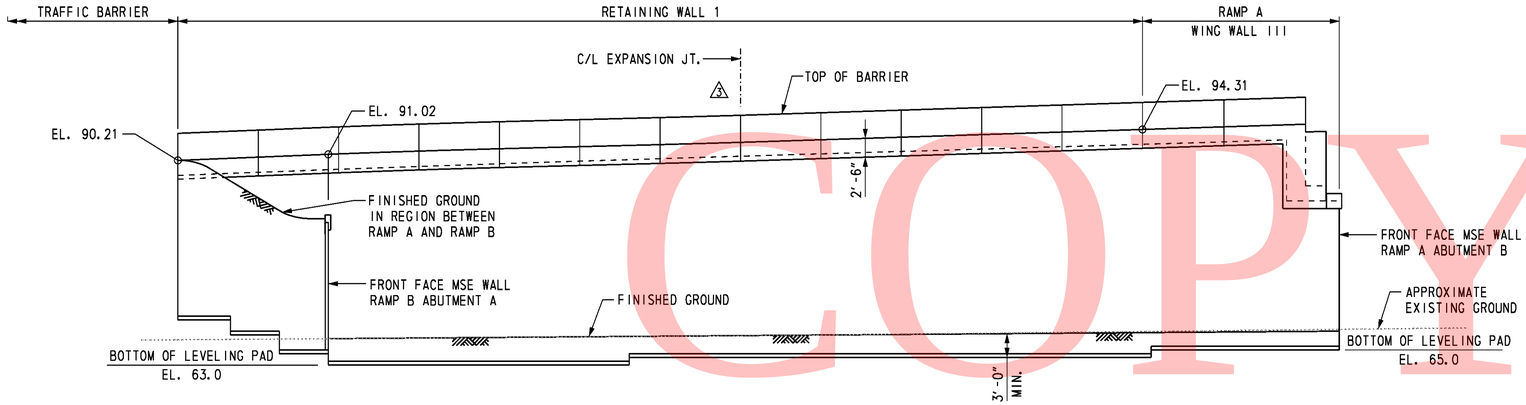

DEVELOPED ELEVATION

SCALE: 1" = 10'-0"

CROSS REFERENCE NOTES:

1. FOR GENERAL NOTES, SEE DWG. R1-1.
2. FOR TYPICAL WALL SECTION, SEE DWG. R1-1.

UNOFFICIAL WEBSITE COPY

O:\20832687-XMI\CAD\Bridge\pe01_RW-1_sr1.dgn
2/10/2011
Steve_Lambert

DELAWARE DEPARTMENT OF TRANSPORTATION	ADDENDUMS / REVISIONS		SR1 / I-95 INTERCHANGE	CONTRACT 28-090-03	BRIDGE NO.	RETAINING WALL 1 PLAN AND ELEVATION	R1-2 SHEET NO. 534
	ADDENDUM NO. 3 ADDED CONTROL JOINTS, 02/16/11, RFK			COUNTY NEW CASTLE	DESIGNED BY: R. F. KIRCHNER		TOTAL SHTS. 803
					CHECKED BY: G. P. MISTRY		

GENERAL NOTES

SPECIFICATIONS: PROPRIETARY MSE WALLS SHALL BE DESIGNED IN ACCORDANCE WITH THE FOLLOWING:
- AASHTO LRFD BRIDGE DESIGN SPECIFICATIONS, 4TH EDITION WITH ALL CURRENT REVISIONS.
- FEDERAL HIGHWAY ADMINISTRATION PUBLICATION NOS. FHWA-NHI-10-024 AND FHWA-NHI-025, "DESIGN AND CONSTRUCTION OF MECHANICALLY STABILIZED EARTH WALLS AND REINFORCED SOIL SLOPES", VOLUME I AND VOLUME II.

CONCRETE DESIGN SHALL BE PERFORMED USING THE LOAD AND RESISTANCE FACTOR DESIGN METHOD.

CONCRETE: ALL CONCRETE FOR BARRIERS, MOMENT SLABS, AND ROADWAY BARRIERS SHALL BE 4,500 PSI. LEVELING PAD CONCRETE SHALL BE 3,500 PSI. MIX REQUIREMENTS SHALL CONFORM TO SECTION 812 OF THE DELAWARE DEPARTMENT OF TRANSPORTATION STANDARD SPECIFICATIONS.

CHAMFERS: ALL EXPOSED CORNERS OF CONCRETE SHALL BE CHAMFERED WITH ¾" x ¾" MILLED CHAMFER STRIPS, UNLESS OTHERWISE NOTED, EXCEPT ON UNEXPOSED FOOTINGS OR WHERE INDICATED BY THE FOLLOWING NOTATION ON THE PLANS: "DO NOT CHAMFER".

REINFORCING STEEL: REINFORCING STEEL SHALL CONFORM TO ASTM A 615, GRADE 60. ALL SPLICES, NOT SHOWN, SHALL BE LAPPED AS PER THE LRFD BRIDGE DESIGN SPECIFICATIONS. MINIMUM COVER FOR ANY BAR SHALL BE 2" UNLESS OTHERWISE NOTED.

FOR TIES AND STIRRUPS, STANDARD ACI BENDING TOLERANCES ARE MODIFIED TO PLUS (+) ZERO INCHES, MINUS (-) NORMAL ACI BENDING TOLERANCE.

ONLY GRADE 60 CAN BE USED ON THIS PROJECT.

ALL REINFORCING STEEL IN THE BARRIER AND MOMENT SLAB SHALL BE EPOXY COATED, AND SHALL CONFORM TO ASTM D3936.

ALL KEYS ARE NOMINAL SIZE.

THE MSE WALL MANUFACTURER MAY SUBSTITUTE ALTERNATE REINFORCING CONFIGURATIONS AND SUBMIT FOR APPROVAL.

EXPANSION AND CONTRACTION JOINTS: THE LOCATION OF THE EXPANSION AND CONTRACTION JOINTS IN THE BARRIER/MOMENT SLAB SHOWN ON THE PLANS MAY BE ADJUSTED TO ACCOMMODATE THE PANEL TYPE USED IN THE PROJECT. ANY CHANGE TO THESE JOINT LOCATIONS SHALL BE SUBMITTED TO THE ENGINEER FOR APPROVAL.

LEVELING PAD: THE PROPRIETARY WALL MANUFACTURER MAY RELOCATE THE LEVELING PAD STEPS AT THEIR DISCRETION PROVIDED THAT THE MINIMUM EMBEDMENT IS MAINTAINED. ANY CHANGE TO THE STEP LOCATIONS SHALL BE SUBMITTED TO THE ENGINEER FOR APPROVAL.

ROADWAY LIMITS: THE PROPRIETARY WALL MANUFACTURER SHALL ASSURE THAT PROPOSED PROPRIETARY WALL COMPONENTS ARE POSITIONED SUCH THAT THE DESIGNATED ROADWAY LIMITS ARE NOT ENCROACHED UPON.

MOMENT SLAB: THE MOMENT SLAB IS DESIGNED IN ACCORDANCE WITH THE SAME CRITERIA SPECIFIED FOR MECHANICALLY STABILIZED EARTH WALLS IN SECTION 11.10.10.2 OF AASHTO LRFD BRIDGE DESIGN SPECIFICATIONS, 4TH. EDITION.

TRAFFIC BARRIER JOINTS: TRAFFIC BARRIER FOOTING/ MOMENT SLAB SHALL HAVE CONSTRUCTION JOINTS TO COINCIDE WITH THE BARRIER JOINTS.

COORDINATION: CONTRACTOR AND PROPRIETARY WALL MANUFACTURER SHALL COORDINATE LOCATIONS OF INLETS AND PIPES WITH LOCATIONS OF PROPRIETARY WALL TIE BACK SYSTEM AND MOMENT SLAB.

ARCHITECTURAL FINISH: THE MSE WALL PANELS SHALL RECEIVE AN ARCHITECTURAL FINISH.

SERVICE LIFE: ALL RETAINING WALL COMPONENTS SHALL BE DESIGNED FOR A MINIMUM SERVICE LIFE OF 100 YEARS.

WALL SYSTEM: ONLY ONE MSE WALL SYSTEM MAY BE USED ON THIS PROJECT.

ROADWAY SUPERELEVATION: FOR ROADWAY SUPERELEVATION, SEE SUPERELEVATION TABLES.

MSE WALL BACKFILL: MSE WALL BACKFILL SHALL CONSIST OF SPECIFIED BACKFILL.

PAY ITEMS: MECHANICALLY STABILIZED EARTH WALLS (602772)

~~PCC MASONRY FOR MSE WALLS (602773)~~

BAR REINFORCEMENT. EPOXY COATED (604000)

PCC MASONRY, PARAPET, CLASS A (602017)

SOIL PROPERTIES

SOIL TYPE	UNIT WEIGHT (PCF)	DRAINED ANGLE OF FRICTION (DEGREES)	UNDRAINED SHEAR (PSF)
SELECT FILL	125	34	-
~~LWEF~~	~~40~~	~~38~~	-
NO. 57 STONE	105	38	-
FOUNDATION SOIL	120	27	1250
CONTROLLED LOW STRENGTH MATERIAL (CLSM)	40	38	-

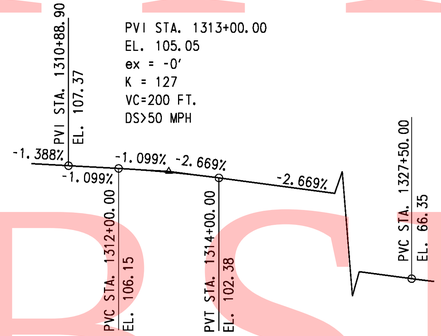

RAMP G1
VERTICAL CURVE DATA
NOT TO SCALE

PI STA. 1310+72.06
△ = 4°47'24.25" RT
Dc = 2°17'30.59"
R = 2,500.0000'
T = 104.56'
L = 209.01'

RAMP G1
HORIZONTAL CURVE NO. 38 DATA

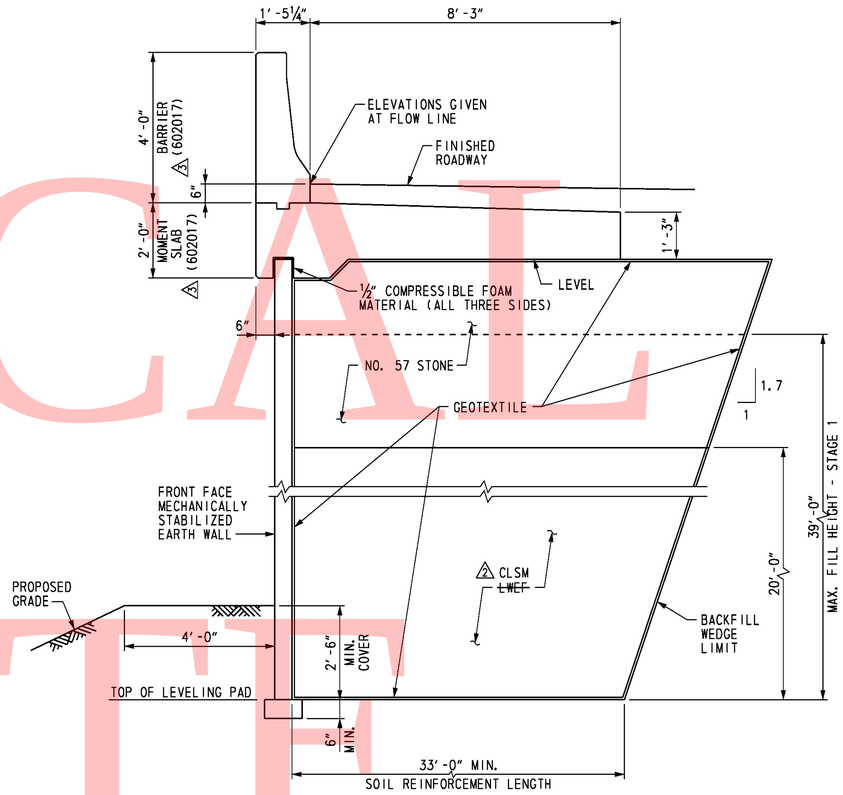

TYPICAL SECTION
SCALE: ½" = 1'-0"

FOUNDATION NOTES:

THE FACTORED BEARING RESISTANCE SHALL BE VERIFIED PRIOR TO CONSTRUCTION OF THE MSE WALL.

THE INTERNAL STABILITY OF THE MSE WALL SHALL BE DESIGNED BY THE CONTRACTOR USING THE SOIL PARAMETERS PROVIDED FOR EACH STRUCTURE LOCATION. THE INTERNAL STABILITY CALCULATIONS SHOULD BE SIGNED AND SEALED BY A PROFESSIONAL ENGINEER LICENSED IN THE STATE OF DELAWARE AS INDICATED IN THE PROJECT SPECIFICATIONS.

ISOLATED AREAS OF UNDERCUTTING OF EXISTING FILL MAY BE ENCOUNTERED DURING CONSTRUCTION OF THIS RETAINING WALL.

A QUARANTINE PERIOD OF ~~APPROXIMATELY~~ THIRTY (30) DAYS IS REQUIRED AFTER CONSTRUCTION OF THE FULL HEIGHT OF THE MSE WALL IS ACHIEVED. THE ENGINEER SHALL APPROVE THE COMPLETION OF THE QUARANTINE PERIOD PRIOR TO CONSTRUCTION OF ANY PAVEMENT OR BARRIER. A TOTAL ESTIMTED SETTLEMENT OF APPROXIMATELY FOUR (4) INCHES IS ANTICIPATED.

UNOFFICIAL WEBSITE COPY

O:\20832687-XM\CAD\Bridge\rd01_RW-2_srf.dgn
2/10/2011
Steve_Lambert

DELAWARE DEPARTMENT OF TRANSPORTATION

ADDENDUMS / REVISIONS	
ADDENDUM NO. 2 REVISED FOUNDATION NOTES AND SOIL PROPERTIES, ADDED PAY ITEMS, 01/26/11, RFK	
ADDENDUM NO. 3 REV. PAY ITEMS, 02/18/11, RFK	

SR1 / I-95 INTERCHANGE

CONTRACT	28-090-03
COUNTY	NEW CASTLE
BRIDGE NO.	
DESIGNED BY: R. F. KIRCHNER	
CHECKED BY: J. S. LI	

RETAINING WALL 2

GENERAL NOTES AND TYPICAL SECTION

R2-1	
SHEET NO.	537
TOTAL SHTS.	803

UNOFFICIAL WEBSITE COPY

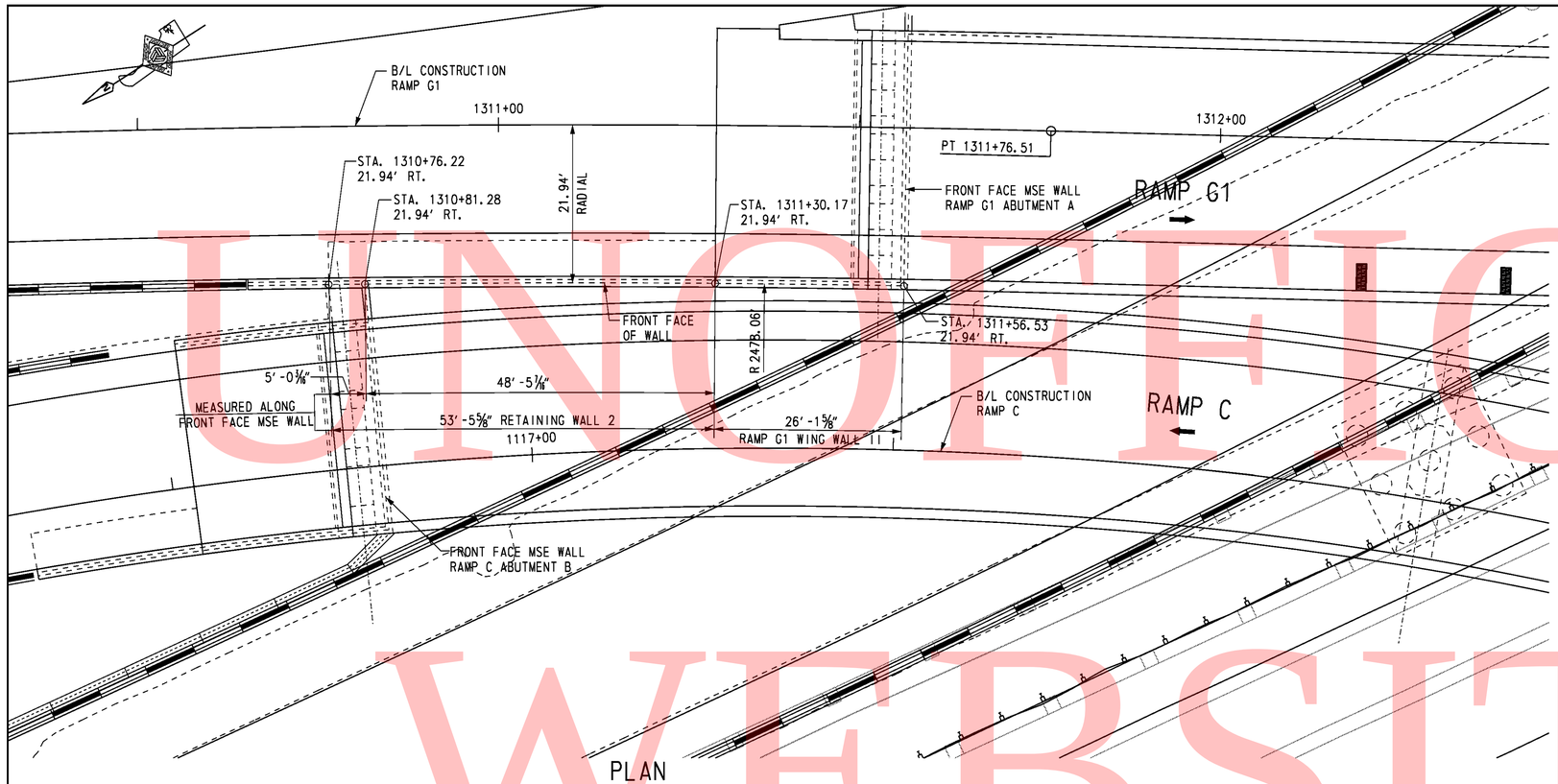

PLAN
SCALE: 1" = 10'-0"

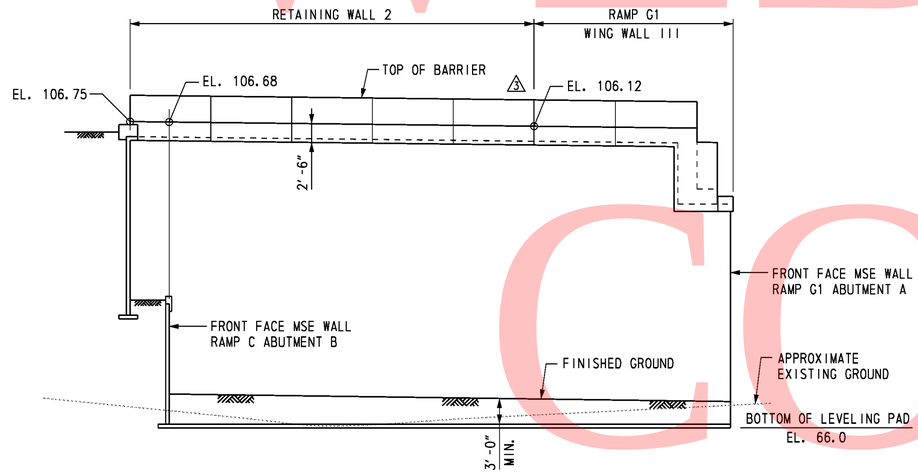

DEVELOPED ELEVATION
SCALE: 1" = 10'-0"

CROSS REFERENCE NOTES:

1. FOR GENERAL NOTES, SEE DWG. R2-1.
2. FOR TYPICAL WALL SECTION, SEE DWG. R2-1.

DELAWARE DEPARTMENT OF TRANSPORTATION	ADDENDUMS / REVISIONS		SR1 / I-95 INTERCHANGE	CONTRACT 28-090-03	BRIDGE NO.	RETAINING WALL 2 PLAN AND ELEVATION	R2-2 SHEET NO. 538
	ADDENDUM NO. 3 ADDED CONTROL JOINTS, 02/18/11, RFK			COUNTY NEW CASTLE	DESIGNED BY: R. F. KIRCHNER		TOTAL SHTS. 803
					CHECKED BY: G. P. MISTRY		

O:\20832687-XM\CAD\Bridge\ps01_RW-2_sr1.dgn
2/10/2011
Steve_Lambert

GENERAL NOTES

SPECIFICATIONS: PROPRIETARY MSE WALLS SHALL BE DESIGNED IN ACCORDANCE WITH THE FOLLOWING:
- AASHTO LRFD BRIDGE DESIGN SPECIFICATIONS, 4TH EDITION WITH ALL CURRENT REVISIONS.
- FEDERAL HIGHWAY ADMINISTRATION PUBLICATION NOS. FHWA-NHI-10-024 AND FHWA-NHI-025, "DESIGN AND CONSTRUCTION OF MECHANICALLY STABILIZED EARTH WALLS AND REINFORCED SOIL SLOPES", VOLUME I AND VOLUME II.

CONCRETE DESIGN SHALL BE PERFORMED USING THE LOAD AND RESISTANCE FACTOR DESIGN METHOD.

CONCRETE: ALL CONCRETE FOR ROADWAY BARRIERS SHALL BE 4,500 PSI. LEVELING PAD CONCRETE SHALL BE 3,500 PSI. MIX REQUIREMENTS SHALL CONFORM TO SECTION 812 OF THE DELAWARE DEPARTMENT OF TRANSPORTATION STANDARD SPECIFICATIONS.

CHAMFERS: ALL EXPOSED CORNERS OF CONCRETE SHALL BE CHAMFERED WITH ¾" x ¾" MILLED CHAMFER STRIPS, UNLESS OTHERWISE NOTED, EXCEPT ON UNEXPOSED FOOTINGS OR WHERE INDICATED BY THE FOLLOWING NOTATION ON THE PLANS: "DO NOT CHAMFER".

REINFORCING STEEL: REINFORCING STEEL SHALL CONFORM TO ASTM A 615, GRADE 60. ALL SPLICES, NOT SHOWN, SHALL BE LAPPED AS PER THE LRFD BRIDGE DESIGN SPECIFICATIONS. MINIMUM COVER FOR ANY BAR SHALL BE 2" UNLESS OTHERWISE NOTED.

FOR TIES AND STIRRUPS, STANDARD ACI BENDING TOLERANCES ARE MODIFIED TO PLUS (+) ZERO INCHES, MINUS (-) NORMAL ACI BENDING TOLERANCE.

ONLY GRADE 60 CAN BE USED ON THIS PROJECT.

ALL REINFORCING STEEL IN THE BARRIER SHALL BE EPOXY COATED, AND SHALL CONFORM TO ASTM D3936.

ALL KEYS ARE NOMINAL SIZE.

THE MSE WALL MANUFACTURER MAY SUBSTITUTE ALTERNATE REINFORCING CONFIGURATIONS AND SUBMIT FOR APPROVAL.

EXPANSION AND CONTRACTION JOINTS: THE LOCATION OF THE EXPANSION AND CONTRACTION JOINTS IN THE BARRIER SHOWN ON THE PLANS MAY BE ADJUSTED TO ACCOMMODATE THE PANEL TYPE USED IN THE PROJECT. ANY CHANGE TO THESE JOINT LOCATIONS SHALL BE SUBMITTED TO THE ENGINEER FOR APPROVAL.

LEVELING PAD: THE PROPRIETARY WALL MANUFACTURER MAY RELOCATE THE LEVELING PAD STEPS AT THEIR DISCRETION PROVIDED THAT THE MINIMUM EMBEDMENT IS MAINTAINED. ANY CHANGE TO THE STEP LOCATIONS SHALL BE SUBMITTED TO THE ENGINEER FOR APPROVAL.

ROADWAY LIMITS: THE PROPRIETARY WALL MANUFACTURER SHALL ASSURE THAT PROPOSED PROPRIETARY WALL COMPONENTS ARE POSITIONED SUCH THAT THE DESIGNATED ROADWAY LIMITS ARE NOT ENCROACHED UPON.

TRAFFIC BARRIER JOINTS: TRAFFIC BARRIER FOOTING SHALL HAVE CONSTRUCTION JOINTS TO COINCIDE WITH THE BARRIER JOINTS.

COORDINATION: CONTRACTOR AND PROPRIETARY WALL MANUFACTURER SHALL COORDINATE LOCATIONS OF INLETS AND PIPES WITH LOCATIONS OF PROPRIETARY WALL TIE BACK SYSTEM.

ARCHITECTURAL FINISH: THE MSE WALL PANELS SHALL RECEIVE AN ARCHITECTURAL FINISH.

SERVICE LIFE: ALL RETAINING WALL COMPONENTS SHALL BE DESIGNED FOR A MINIMUM SERVICE LIFE OF 100 YEARS.

WALL SYSTEM: ONLY ONE MSE WALL SYSTEM MAY BE USED ON THIS PROJECT.

ROADWAY SUPERELEVATION: FOR ROADWAY SUPERELEVATION, SEE SUPERELEVATION TABLES.

MSE WALL BACKFILL: MSE WALL BACKFILL SHALL CONSIST OF SPECIFIED BACKFILL.

△2 PAY ITEMS: MECHANICALLY STABILIZED EARTH WALLS (602772)

~~△3 PCC MASONRY FOR MSE WALLS (602773)~~

BAR REINFORCEMENT. EPOXY COATED (604000)

△3 PCC MASONRY, PARAPET, CLASS A (602017)

SOIL PROPERTIES

SOIL TYPE	UNIT WEIGHT (PCF)	DRAINED ANGLE OF FRICTION (DEGREES)	UNDRAINED SHEAR (PSF)
SELECT FILL	125	34	-
△2 ~~LWEF~~	~~40~~	~~38~~	-
NO. 57 STONE	105	38	-
FOUNDATION SOIL	105	28	1250
△2 CONTROLLED LOW STRENGTH MATERIAL (CLSM)	40	38	-

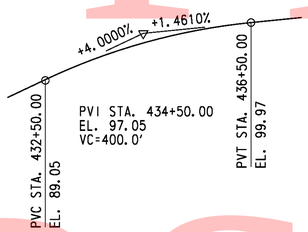

RAMP B
VERTICAL CURVE DATA
NOT TO SCALE

PI STA. 432+05.12
△ = 49°15'06.54" RT
Dc = 3°08'22.18"
R = 1,825.0000'
T = 836.55'
L = 1,568.78'

RAMP B
HORIZONTAL CURVE NO. 18 DATA

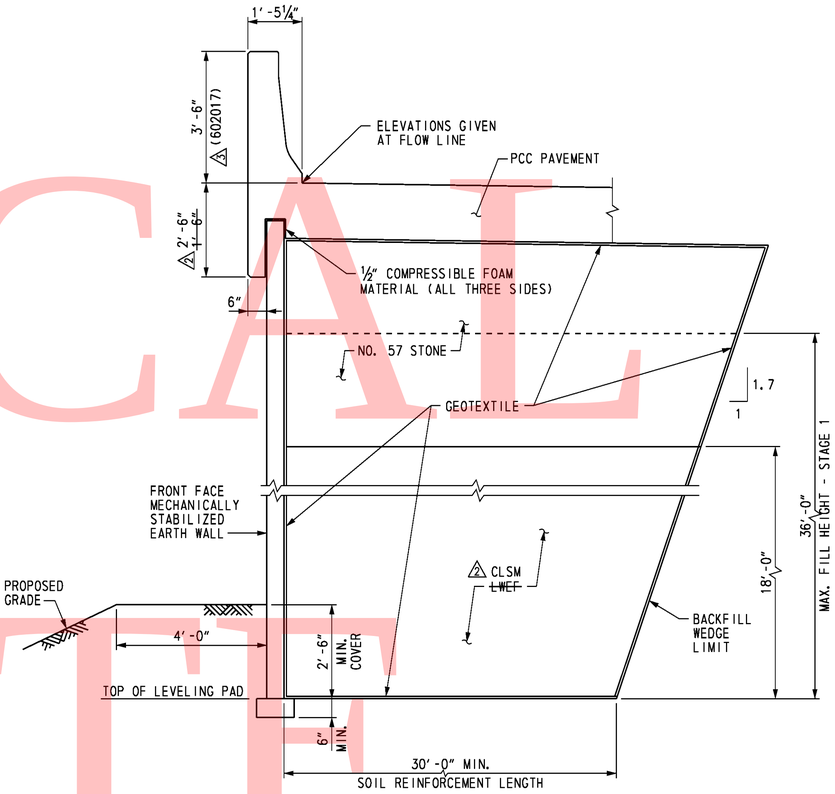

TYPICAL SECTION
SCALE: ½" = 1'-0"

FOUNDATION NOTES:

THE FACTORED BEARING RESISTANCE SHALL BE VERIFIED PRIOR TO CONSTRUCTION OF THE MSE WALL.

THE INTERNAL STABILITY OF THE MSE WALL SHALL BE DESIGNED BY THE CONTRACTOR USING THE SOIL PARAMETERS PROVIDED FOR EACH STRUCTURE LOCATION. THE INTERNAL STABILITY CALCULATIONS SHOULD BE SIGNED AND SEALED BY A PROFESSIONAL ENGINEER LICENSED IN THE STATE OF DELAWARE AS INDICATED IN THE PROJECT SPECIFICATIONS.

ISOLATED AREAS OF UNDERCUTTING OF EXISTING FILL MAY BE ENCOUNTERED DURING CONSTRUCTION OF THIS RETAINING WALL.

△2 A QUARANTINE PERIOD OF ~~APPROXIMATELY~~ THIRTY (30) DAYS IS REQUIRED AFTER CONSTRUCTION OF THE FULL HEIGHT OF THE MSE WALL IS ACHIEVED. THE ENGINEER SHALL APPROVE THE COMPLETION OF THE QUARANTINE PERIOD PRIOR TO CONSTRUCTION OF ANY PAVEMENT OR BARRIER. A TOTAL ESTIMTED SETTLEMENT OF APPROXIMATELY FOUR (4) INCHES IS ANTICIPATED.

UNOFFICIAL WEBSITE COPY

O:\20832687-XXM\CAD\Bridge\rd01_RW-3_srf.dgn
2/10/2011
Steve_Lambert

DELAWARE DEPARTMENT OF TRANSPORTATION

ADDENDUMS / REVISIONS
ADDENDUM NO. △2 REV. FOUNDATION NOTES, COPING DIMENSION AND SOIL PROPERTIES, ADDED PAY ITEMS, 01/26/11, RFK
ADDENDUM NO. △3 REV. PAY ITEMS, 02/18/11, RFK

SR1 / I-95 INTERCHANGE

CONTRACT 28-090-03
COUNTY NEW CASTLE
BRIDGE NO.
DESIGNED BY: R. F. KIRCHNER
CHECKED BY: J. S. LI

RETAINING WALL 3
GENERAL NOTES AND TYPICAL SECTION

R3-1
SHEET NO. 542
TOTAL SHTS. 803

UNOFFICIAL WEBSITE COPY

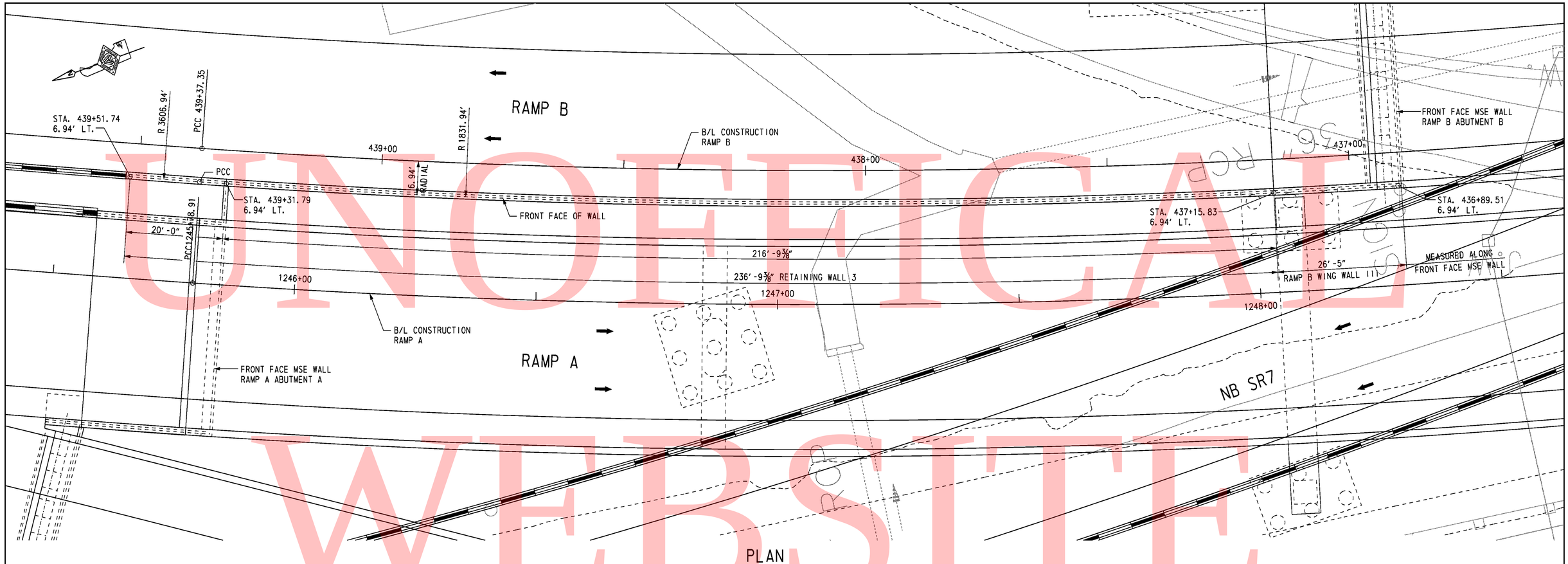

PLAN
SCALE: 1" = 10'-0"

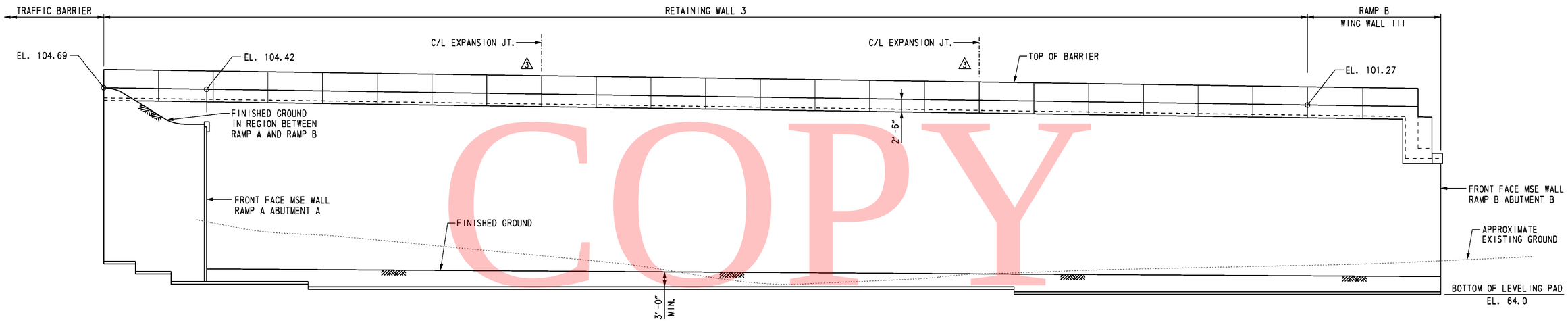

DEVELOPED ELEVATION
SCALE: 1" = 10'-0"

CROSS REFERENCE NOTES:

1. FOR GENERAL NOTES, SEE DWG. R3-1.
2. FOR TYPICAL WALL SECTION, SEE DWG. R3-1.

R3-2

DELAWARE DEPARTMENT OF TRANSPORTATION	ADDENDUMS / REVISIONS ADDENDUM NO. 3 ADDED CONTROL JOINTS, 02/18/11, RFK		SR1 / I-95 INTERCHANGE	CONTRACT 28-090-03 COUNTY NEW CASTLE	BRIDGE NO. DESIGNED BY: R. F. KIRCHNER CHECKED BY: G. P. MISTRY	RETAINING WALL 3 PLAN AND ELEVATION	SHEET NO. 543 TOTAL SHTS. 803

O:\20832687-XM\CAD\Bridge\ps01_RW-3_sr1.dgn
2/10/2011
Steve_Lambert

GENERAL NOTES

SPECIFICATIONS: PROPRIETARY MSE WALLS SHALL BE DESIGNED IN ACCORDANCE WITH THE FOLLOWING:
- AASHTO LRFD BRIDGE DESIGN SPECIFICATIONS, 4TH EDITION WITH ALL CURRENT REVISIONS.
- FEDERAL HIGHWAY ADMINISTRATION PUBLICATION NO. FHWA-NHI-00-043, "MECHANICALLY STABILIZED EARTH WALLS AND REINFORCED SOIL SLOPES DESIGN AND CONSTRUCTION GUIDELINES"

CONCRETE: CONCRETE DESIGN SHALL BE PERFORMED USING THE LOAD AND RESISTANCE FACTOR DESIGN METHOD.

COPING CONCRETE SHALL BE 3500 PSI. MIX REQUIREMENTS SHALL CONFORM TO SECTION 812 OF THE DELAWARE DEPARTMENT OF TRANSPORTATION STANDARD SPECIFICATIONS.

CHAMFERS: ALL EXPOSED CORNERS OF CONCRETE SHALL BE CHAMFERED WITH ¾" x ¾" MILLED CHAMFER STRIPS, UNLESS OTHERWISE NOTED EXCEPT ON UNEXPOSED FOOTINGS OR WHERE INDICATED BY THE FOLLOWING NOTATION ON THE PLANS: "DO NOT CHAMFER".

REINFORCING STEEL: REINFORCING STEEL SHALL CONFORM TO ASTM A 615, GRADE 60. MINIMUM COVER FOR ANY BAR SHALL BE 2" UNLESS OTHERWISE NOTED.

FOR TIES AND STIRRUPS, STANDARD ACI BENDING TOLERANCES ARE MODIFIED TO PLUS (+) ZERO INCHES, MINUS (-) NORMAL ACI BENDING TOLERANCE.

ONLY GRADE 60 CAN BE USED ON THIS PROJECT.

ALL REINFORCING STEEL IN THE COPING SHALL BE EPOXY COATED.

ALL KEYS ARE NOMINAL SIZE.

THE MSE WALL MANUFACTURER MAY SUBSTITUTE ALTERNATE REINFORCING CONFIGURATIONS AND SUBMIT FOR APPROVAL.

EXPANSION AND CONTRACTION JOINTS: THE LOCATION OF THE EXPANSION AND CONTRACTION JOINTS IN THE COPING SHOWN ON THE PLANS MAY BE ADJUSTED TO ACCOMMODATE THE PANEL TYPE USED IN THE PROJECT. ANY CHANGE TO THESE JOINT LOCATIONS SHALL BE SUBMITTED TO THE ENGINEER FOR APPROVAL. EXPANSION JOINTS ARE LABELED "EJ".

LEVELING PAD: THE PROPRIETARY WALL MANUFACTURER MAY RELOCATE THE LEVELING PAD STEPS AT THEIR DISCRETION PROVIDED THAT THE MINIMUM EMBEDMENT IS MAINTAINED. ANY CHANGE TO THE STEP LOCATIONS SHALL BE SUBMITTED TO THE ENGINEER FOR APPROVAL.

ROADWAY LIMITS: THE PROPRIETARY WALL MANUFACTURER SHALL ASSURE THAT PROPOSED PROPRIETARY WALL COMPONENTS ARE POSITIONED SUCH THAT THE DESIGNATED ROADWAY LIMITS ARE NOT ENCROACHED UPON.

COPING JOINTS: COPING SHALL HAVE CONSTRUCTION JOINTS.

COORDINATION: CONTRACTOR AND PROPRIETARY WALL MANUFACTURER SHALL COORDINATE LOCATIONS OF INLETS AND PIPES WITH LOCATIONS OF PROPRIETARY WALL TIEBACK SYSTEM.

ARCHITECTURAL FINISH: THE MSE WALL PANELS SHALL RECEIVE AN ARCHITECTURAL FINISH.

SERVICE LIFE: ALL RETAINING WALL COMPONENTS SHALL BE DESIGNED FOR A MINIMUM SERVICE LIFE OF ~~75~~ 100 (2) YEARS.

WALL SYSTEM: ONLY ONE MSE WALL SYSTEM MAY BE USED ON THIS PROJECT.

ROADWAY SUPERELEVATION: FOR ROADWAY SUPERELEVATION, SEE SUPERELEVATION TABLES.

MSE WALL BACKFILL: MSE WALL BACKFILL SHALL CONSIST OF SPECIFIED BACKFILL.

PAY ITEMS: MECHANICALLY STABILIZED EARTH WALLS (602772)
PCC MASONRY FOR MSE WALLS (602773)
BAR REINFORCEMENT, EPOXY COATED (604000)

FOUNDATION NOTES

THE FACTORED BEARING RESISTANCE SHALL BE VERIFIED PRIOR TO CONSTRUCTION OF THE MSE WALL.

THE INTERNAL STABILITY OF THE MSE WALL SHALL BE DESIGNED BY THE CONTRACTOR USING THE SOIL PARAMETERS PROVIDED. THE INTERNAL STABILITY SHOULD BE SIGNED AND SEALED BY A PROFESSIONAL ENGINEER LICENSED IN THE STATE OF DELAWARE AS INDICATED IN THE PROJECT SPECIFICATIONS. THE FACTORED APPLIED BEARING STRESS SHALL NOT EXCEED THE FACTORED BEARING RESISTANCE.

ISOLATED AREAS OF UNDERCUTTING OF SOFT SOIL OR EXISTING FILL MAY BE ENCOUNTERED DURING CONSTRUCTION OF THIS RETAINING WALL.

GROUNDWATER MAY BE ENCOUNTERED DURING EXCAVATION TO THE LEVELING PAD AND DURING CONSTRUCTION OF THIS RETAINING WALL. IT IS THE CONTRACTOR'S RESPONSIBILITY TO PROVIDE A RELATIVELY DRY EXCAVATION, INCLUDING DETERMINING APPROPRIATE DEWATERING METHODS DURING CONSTRUCTION.

(2) A QUARANTINE PERIOD OF ~~APPROXIMATELY~~ 30-DAYS IS REQUIRED AFTER CONSTRUCTION OF THE FULL HEIGHT OF THE MSE WALL IS ACHIEVED. THE ENGINEER SHALL APPROVE THE COMPLETION OF THE QUARANTINE PERIOD PRIOR TO CONSTRUCTION OF ANY COPING.

THE DESIGN UNIT WEIGHT INDICATED IN SOIL PROPERTIES TABLE HAS BEEN ADJUSTED DUE TO THE PRESENCE OF SHALLOW GROUNDWATER.

SOIL PROPERTIES FOR DESIGN

SOIL TYPE	UNIT WEIGHT (PCF)	ANGLE OF FRICTION (DEGREES)
SELECT FILL	125	34
NO. 57 STONE	105	38
FOUNDATION SOIL	68	24

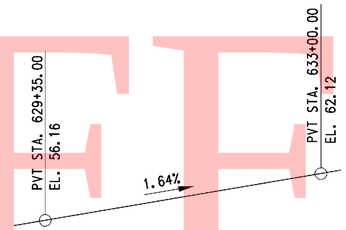

SR7 (NB) VERTICAL CURVE DATA

NO SCALE

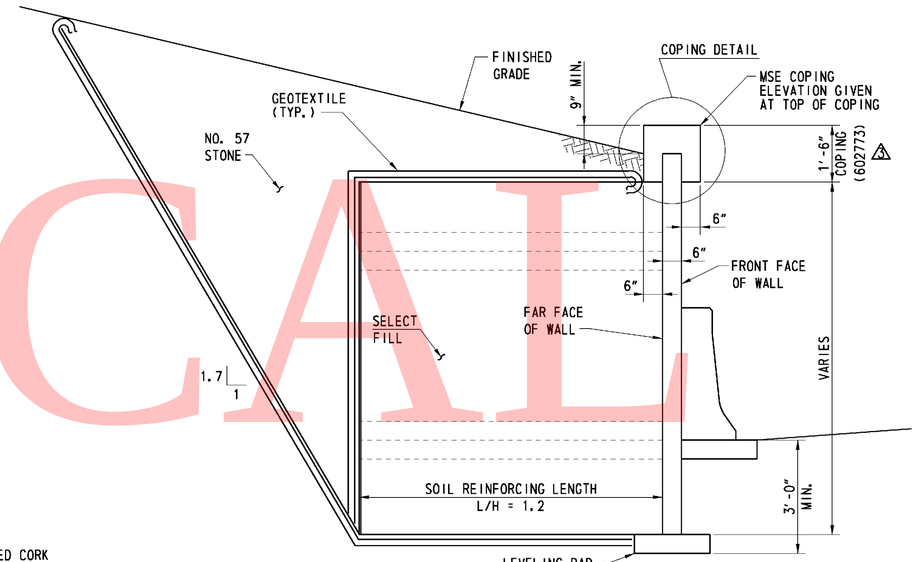

TYPICAL SECTION

(LOOKING AHEAD STATION)
SCALE: ½" = 1'-0"

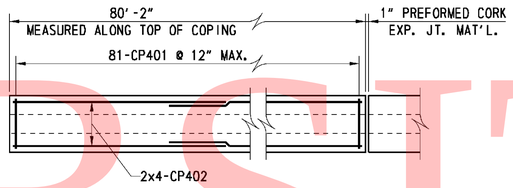

TYPE 1 PANEL (1 REQUIRED)

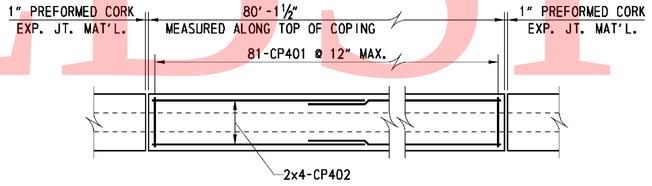

TYPE 2 PANEL (2 REQUIRED)

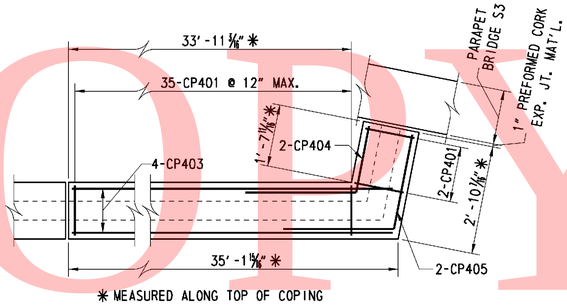

* MEASURED ALONG TOP OF COPING

TYPE 3 PANEL (1 REQUIRED)

COPING REINFORCING PLANS

SCALE: ½" = 1'-0"

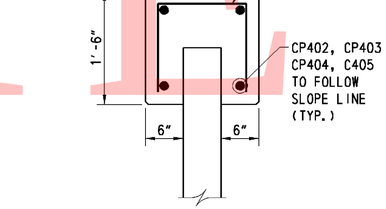

COPING DETAIL

SCALE: 1" = 1'-0"

	SPECIFICATIONS					BENDING DIMENSIONS (FEET-INCHES /QUARTER INCH)						
	QTY.	SIZE	LENGTH	MARK	TYPE	A	B	C	D	H	K	O
COPING	280	4	3-6	CP401	17		1-2	1-2	1-2			
	24	4	41-4 12	CP402	STR							
	4	4	34-9 15/16	CP403	STR							
	2	4	4-6 3/4	CP404	12	0	0	2-11	1-7 3/4	1-7 3/8	0-3 7/8	3-2 7/8
	2	4	5-5 7/16	CP405	12	0	0	2-11	2-6 7/16	2-5 7/8	0-6	3-5

SEE SHEET R7-07 FOR BAR BEND NOTES

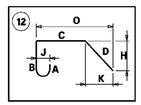

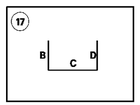

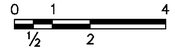

SCALE: ½"=1'-0"

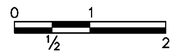

SCALE: 1"=1'-0"

UNOFFICIAL WEBSITE COPY

2/14/2011 9:07:40 AM
M:\PROJECTS\2003\03059_DELTRNPK\STRMALL\CADD\2809003\PLANS\RD01_WALL-04_SR1.DGN

GENERAL NOTES

SPECIFICATIONS: PROPRIETARY MSE WALLS SHALL BE DESIGNED IN ACCORDANCE WITH THE FOLLOWING:
- AASHTO LRFD BRIDGE DESIGN SPECIFICATIONS, 4TH EDITION WITH ALL CURRENT REVISIONS.
- FEDERAL HIGHWAY ADMINISTRATION PUBLICATION NO. FHWA-NHI-00-043, "MECHANICALLY STABILIZED EARTH WALLS AND REINFORCED SOIL SLOPES DESIGN AND CONSTRUCTION GUIDELINES"

CONCRETE: CONCRETE DESIGN SHALL BE PERFORMED USING THE LOAD AND RESISTANCE FACTOR DESIGN METHOD.

COPING CONCRETE SHALL BE 3500 PSI. MIX REQUIREMENTS SHALL CONFORM TO SECTION 812 OF THE DELAWARE DEPARTMENT OF TRANSPORTATION STANDARD SPECIFICATIONS.

CHAMFERS: ALL EXPOSED CORNERS OF CONCRETE SHALL BE CHAMFERED WITH ¾" x ¾" MILLED CHAMFER STRIPS, UNLESS OTHERWISE NOTED EXCEPT ON UNEXPOSED FOOTINGS OR WHERE INDICATED BY THE FOLLOWING NOTATION ON THE PLANS: "DO NOT CHAMFER".

REINFORCING STEEL: REINFORCING STEEL SHALL CONFORM TO ASTM A 615, GRADE 60. MINIMUM COVER FOR ANY BAR SHALL BE 2" UNLESS OTHERWISE NOTED.

FOR TIES AND STIRRUPS, STANDARD ACI BENDING TOLERANCES ARE MODIFIED TO PLUS (+) ZERO INCHES, MINUS (-) NORMAL ACI BENDING TOLERANCE.

ONLY GRADE 60 CAN BE USED ON THIS PROJECT.

ALL REINFORCING STEEL IN THE COPING SHALL BE EPOXY COATED.

ALL KEYS ARE NOMINAL SIZE.

THE MSE WALL MANUFACTURER MAY SUBSTITUTE ALTERNATE REINFORCING CONFIGURATIONS AND SUBMIT FOR APPROVAL.

EXPANSION AND CONTRACTION JOINTS: THE LOCATION OF THE EXPANSION AND CONTRACTION JOINTS IN THE COPING SHOWN ON THE PLANS MAY BE ADJUSTED TO ACCOMMODATE THE PANEL TYPE USED IN THE PROJECT. ANY CHANGE TO THESE JOINT LOCATIONS SHALL BE SUBMITTED TO THE ENGINEER FOR APPROVAL. EXPANSION JOINTS ARE LABELED "EJ".

LEVELING PAD: THE PROPRIETARY WALL MANUFACTURER MAY RELOCATE THE LEVELING PAD STEPS AT THEIR DISCRETION PROVIDED THAT THE MINIMUM EMBEDMENT IS MAINTAINED. ANY CHANGE TO THE STEP LOCATIONS SHALL BE SUBMITTED TO THE ENGINEER FOR APPROVAL.

ROADWAY LIMITS: THE PROPRIETARY WALL MANUFACTURER SHALL ASSURE THAT PROPOSED PROPRIETARY WALL COMPONENTS ARE POSITIONED SUCH THAT THE DESIGNATED ROADWAY LIMITS ARE NOT ENCROACHED UPON.

COPING JOINTS: COPING SHALL HAVE CONSTRUCTION JOINTS.

COORDINATION: CONTRACTOR AND PROPRIETARY WALL MANUFACTURER SHALL COORDINATE LOCATIONS OF INLETS AND PIPES WITH LOCATIONS OF PROPRIETARY WALL TIEBACK SYSTEM.

ARCHITECTURAL FINISH: THE MSE WALL PANELS SHALL RECEIVE AN ARCHITECTURAL FINISH.

SERVICE LIFE: ALL RETAINING WALL COMPONENTS SHALL BE DESIGNED FOR A MINIMUM SERVICE LIFE OF ~~75~~ 100 YEARS. (3)

WALL SYSTEM: ONLY ONE MSE WALL SYSTEM MAY BE USED ON THIS PROJECT.

ROADWAY SUPERELEVATION: FOR ROADWAY SUPERELEVATION, SEE SUPERELEVATION TABLES.

MSE WALL BACKFILL: MSE WALL BACKFILL SHALL CONSIST OF SPECIFIED BACKFILL.

PAY ITEMS: PCC MASONRY, PARAPET, CLASS A (602017)
MECHANICALLY STABILIZED EARTH WALLS (602772)
PCC MASONRY FOR MSE WALLS (602773)
BAR REINFORCEMENT, EPOXY COATED (604000)

FOUNDATION NOTES

THE FACTORED BEARING RESISTANCE SHALL BE VERIFIED PRIOR TO CONSTRUCTION OF THE MSE WALL.

THE INTERNAL STABILITY OF THE MSE WALL SHALL BE DESIGNED BY THE CONTRACTOR USING THE SOIL PARAMETERS PROVIDED. THE INTERNAL STABILITY SHOULD BE SIGNED AND SEALED BY A PROFESSIONAL ENGINEER LICENSED IN THE STATE OF DELAWARE AS INDICATED IN THE PROJECT SPECIFICATIONS. THE FACTORED APPLIED BEARING STRESS SHALL NOT EXCEED THE FACTORED BEARING RESISTANCE.

ISOLATED AREAS OF UNDERCUTTING OF SOFT SOIL OR EXISTING FILL MAY BE ENCOUNTERED DURING CONSTRUCTION OF THIS RETAINING WALL.

GROUNDWATER MAY BE ENCOUNTERED DURING EXCAVATION TO THE LEVELING PAD AND DURING CONSTRUCTION OF THIS RETAINING WALL. IT IS THE CONTRACTOR'S RESPONSIBILITY TO PROVIDE A RELATIVELY DRY EXCAVATION, INCLUDING DETERMINING APPROPRIATE DEWATERING METHODS DURING CONSTRUCTION.

(2) A QUARANTINE PERIOD OF ~~APPROXIMATELY~~ 30-DAYS IS REQUIRED AFTER CONSTRUCTION OF THE FULL HEIGHT OF THE MSE WALL IS ACHIEVED. THE ENGINEER SHALL APPROVE THE COMPLETION OF THE QUARANTINE PERIOD PRIOR TO CONSTRUCTION OF ANY COPING OR PARAPETS.

THE DESIGN UNIT WEIGHT INDICATED IN SOIL PROPERTIES TABLE HAS BEEN ADJUSTED DUE TO THE PRESENCE OF SHALLOW GROUNDWATER.

THE WALL SUPPLIER SHALL PERFORM A DETAILED SEISMIC ANALYSIS FOR BACK TO BACK MSE WALLS WITH L/H LESS THAN 1.1, IF NECESSARY, AS REQUIRED BY FHWA PUBLICATION NO. FHWA-NHI-00-043.

SOIL PROPERTIES FOR DESIGN

SOIL TYPE	UNIT WEIGHT (PCF)	ANGLE OF FRICTION (DEGREES)
SELECT FILL	125	34
COMMON BORROW	130	28
FOUNDATION SOIL	63	29

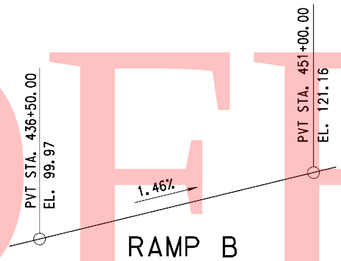

RAMP B
VERTICAL CURVE DATA
NO SCALE

CURVE NO. 20

P. I. STA.	453+31.90
△	29°54'47.21" RT
DC	3°00'56.04"
R	1900.00'
TANGENT	507.56'
LENGTH	991.96'

RAMP B
HORIZONTAL CURVE DATA
NO SCALE

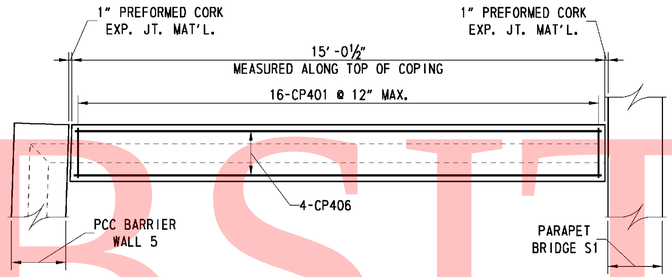

COPING REINFORCING PLAN
SCALE: ½" = 1'-0"

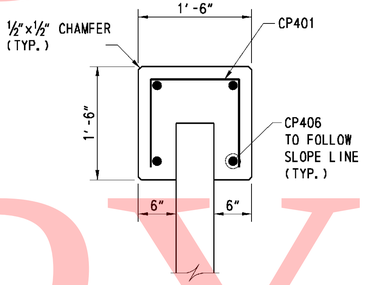

COPING DETAIL
SCALE: 1"= 1'-0"

	SPECIFICATIONS					BENDING DIMENSIONS (FEET-INCHES /QUARTER INCH)							
	QTY.	SIZE	LENGTH	MARK	TYPE	A	B	C	D	H	K	O	REMARKS
COPING	16	4	3-6	CP401	17		1-2	1-2	1-2				
	4	4	14-8 12	CP406	STR								BEND BARS IN FIELD AS NEEDED

(17) B C D

SEE SHEET R7-07 FOR BAR BEND NOTES

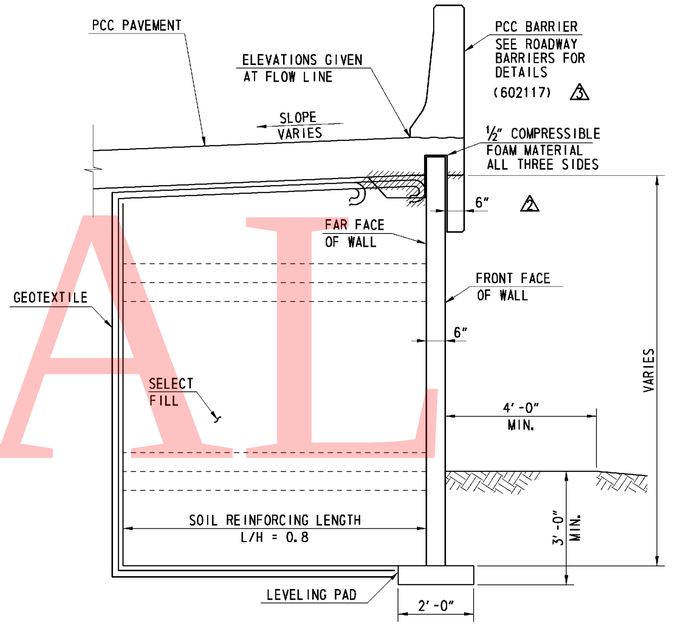

TYPICAL SECTION
STA. 449+22.48 TO STA. 450+42.00
(LOOKING BACK STATION)
SCALE: ½" = 1'-0"

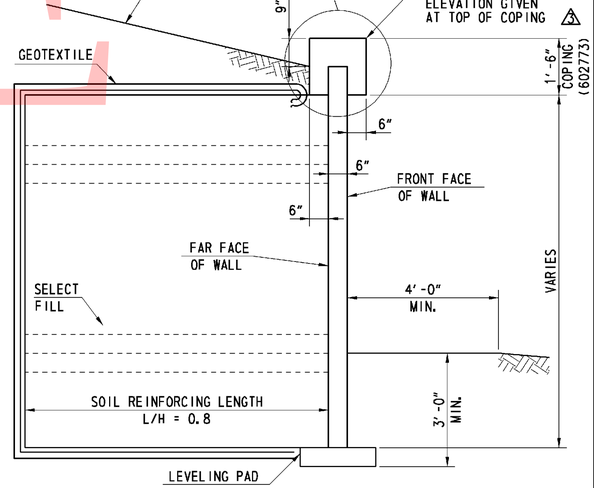

TYPICAL SECTION
STA. 449+22.01 TO STA. 449+22.48
SCALE: ½" = 1'-0"

SCALE: ½"=1'-0" (0, 1, 4; ½, 2)

SCALE: 1"=1'-0" (0, 1; ½, 2)

UNOFFICIAL WEBSITE COPY

2/14/2011 1:10:14 PM
M:\PROJECTS\2003\03059_DELTRNPK\SRIMALL\CADD\2809003\PLANS\RD03_WALL-05_SR1.DGN

DELAWARE DEPARTMENT OF TRANSPORTATION

ADDENDUMS / REVISIONS
- ADDENDUM NO. (2), UPDATED FOUNDATION NOTES, SECTION, 01/26/11, JSW
- ADDENDUM NO. (3), UPDATED GENERAL NOTES AND TYPICAL SECTION, 02/18/11, JSW

SR1 / I-95 INTERCHANGE

CONTRACT 28-090-03 | COUNTY NEW CASTLE | BRIDGE NO. | DESIGNED BY: JMS | CHECKED BY: JSW

RETAINING WALL 5
GENERAL NOTES AND TYPICAL SECTION

R5-01 | SHEET NO. 551 | TOTAL SHTS. 803

GENERAL NOTES

SPECIFICATIONS: PROPRIETARY MSE WALLS SHALL BE DESIGNED IN ACCORDANCE WITH THE FOLLOWING:
- AASHTO LRFD BRIDGE DESIGN SPECIFICATIONS, 4TH EDITION WITH ALL CURRENT REVISIONS.
- FEDERAL HIGHWAY ADMINISTRATION PUBLICATION NO. FHWA-NHI-00-043, "MECHANICALLY STABILIZED EARTH WALLS AND REINFORCED SOIL SLOPES DESIGN AND CONSTRUCTION GUIDELINES"

CONCRETE: CONCRETE DESIGN SHALL BE PERFORMED USING THE LOAD AND RESISTANCE FACTOR DESIGN METHOD.

COPING CONCRETE SHALL BE 3500 PSI. MIX REQUIREMENTS SHALL CONFORM TO SECTION 812 OF THE DELAWARE DEPARTMENT OF TRANSPORTATION STANDARD SPECIFICATIONS.

CHAMFERS: ALL EXPOSED CORNERS OF CONCRETE SHALL BE CHAMFERED WITH ¾" x ¾" MILLED CHAMFER STRIPS, UNLESS OTHERWISE NOTED EXCEPT ON UNEXPOSED FOOTINGS OR WHERE INDICATED BY THE FOLLOWING NOTATION ON THE PLANS: "DO NOT CHAMFER".

REINFORCING STEEL: REINFORCING STEEL SHALL CONFORM TO ASTM A 615, GRADE 60. MINIMUM COVER FOR ANY BAR SHALL BE 2" UNLESS OTHERWISE NOTED.

FOR TIES AND STIRRUPS, STANDARD ACI BENDING TOLERANCES ARE MODIFIED TO PLUS (+) ZERO INCHES, MINUS (-) NORMAL ACI BENDING TOLERANCE.

ONLY GRADE 60 CAN BE USED ON THIS PROJECT.

ALL REINFORCING STEEL IN THE COPING SHALL BE EPOXY COATED.

ALL KEYS ARE NOMINAL SIZE.

THE MSE WALL MANUFACTURER MAY SUBSTITUTE ALTERNATE REINFORCING CONFIGURATIONS AND SUBMIT FOR APPROVAL.

EXPANSION AND CONTRACTION JOINTS: THE LOCATION OF THE EXPANSION AND CONTRACTION JOINTS IN THE COPING SHOWN ON THE PLANS MAY BE ADJUSTED TO ACCOMMODATE THE PANEL TYPE USED IN THE PROJECT. ANY CHANGE TO THESE JOINT LOCATIONS SHALL BE SUBMITTED TO THE ENGINEER FOR APPROVAL. EXPANSION JOINTS ARE LABELED "EJ".

LEVELING PAD: THE PROPRIETARY WALL MANUFACTURER MAY RELOCATE THE LEVELING PAD STEPS AT THEIR DISCRETION PROVIDED THAT THE MINIMUM EMBEDMENT IS MAINTAINED. ANY CHANGE TO THE STEP LOCATIONS SHALL BE SUBMITTED TO THE ENGINEER FOR APPROVAL.

ROADWAY LIMITS: THE PROPRIETARY WALL MANUFACTURER SHALL ASSURE THAT PROPOSED PROPRIETARY WALL COMPONENTS ARE POSITIONED SUCH THAT THE DESIGNATED ROADWAY LIMITS ARE NOT ENCROACHED UPON.

COPING JOINTS: COPING SHALL HAVE CONSTRUCTION JOINTS.

COORDINATION: CONTRACTOR AND PROPRIETARY WALL MANUFACTURER SHALL COORDINATE LOCATIONS OF INLETS AND PIPES WITH LOCATIONS OF PROPRIETARY WALL TIEBACK SYSTEM.

ARCHITECTURAL FINISH: THE MSE WALL PANELS SHALL RECEIVE AN ARCHITECTURAL FINISH.

SERVICE LIFE: ALL RETAINING WALL COMPONENTS SHALL BE DESIGNED FOR A MINIMUM SERVICE LIFE OF ~~75~~ 100 YEARS. (3)

WALL SYSTEM: ONLY ONE MSE WALL SYSTEM MAY BE USED ON THIS PROJECT.

ROADWAY SUPERELEVATION: FOR ROADWAY SUPERELEVATION, SEE SUPERELEVATION TABLES.

MSE WALL BACKFILL: MSE WALL BACKFILL SHALL CONSIST OF SPECIFIED BACKFILL.

PAY ITEMS: MECHANICALLY STABILIZED EARTH WALLS (602772)
PCC MASONRY FOR MSE WALLS (602773)
BAR REINFORCEMENT, EPOXY COATED (604000)

SOIL PROPERTIES FOR DESIGN

SOIL TYPE	UNIT WEIGHT (PCF)	ANGLE OF FRICTION (DEGREES)
SELECT FILL	125	34
~~NO. 57 STONE~~	130	28
FOUNDATION SOIL	125	32
COMMON BORROW		

(3)

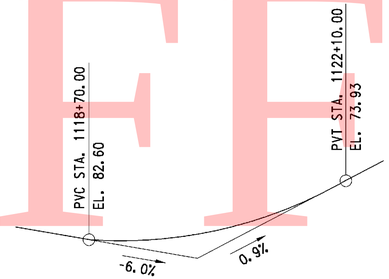

RAMP C
VERTICAL CURVE DATA
NO SCALE

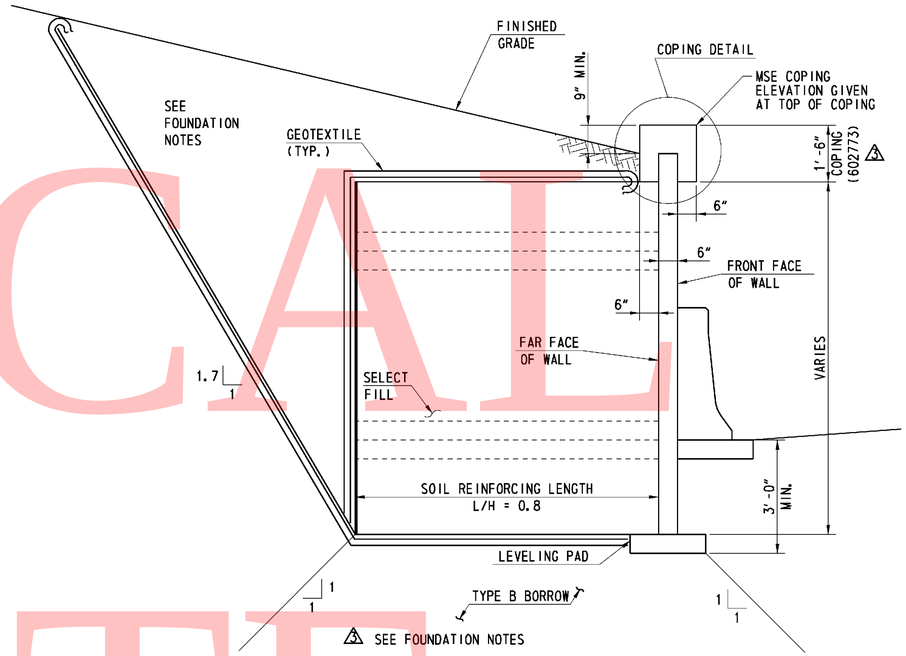

TYPICAL SECTION
(LOOKING BACK STATION)
SCALE: ½" = 1'-0"

CURVE NO. 30

P.I. STA.	1118+29.56
Δ	39°23'47.64" LT
DC	9°32'57.47"
R	600.00'
TANGENT	214.81'
LENGTH	412.56'

RAMP C
HORIZONTAL CURVE DATA
NO SCALE

FOUNDATION NOTES

THE FACTORED BEARING RESISTANCE SHALL BE VERIFIED PRIOR TO CONSTRUCTION OF THE MSE WALL.

THE INTERNAL STABILITY OF THE MSE WALL SHALL BE DESIGNED BY THE CONTRACTOR USING THE SOIL PARAMETERS PROVIDED. THE INTERNAL STABILITY SHOULD BE SIGNED AND SEALED BY A PROFESSIONAL ENGINEER LICENSED IN THE STATE OF DELAWARE AS INDICATED IN THE PROJECT SPECIFICATIONS. THE FACTORED APPLIED BEARING STRESS SHALL NOT EXCEED THE FACTORED BEARING RESISTANCE.

(2) A QUARANTINE PERIOD OF ~~APPROXIMATELY~~ 30-DAYS IS REQUIRED AFTER CONSTRUCTION OF THE FULL HEIGHT OF THE MSE WALL IS ACHIEVED. THE ENGINEER SHALL APPROVE THE COMPLETION OF THE QUARANTINE PERIOD PRIOR TO CONSTRUCTION OF ANY COPING.

RETAINING WALL 6 MUST BE CONSTRUCTED ON SELECT FILL FOUNDATION SOIL.

RETAINING WALL 6 FROM RAMP C STATION 1117+47.08 TO 1117+75 CAN BE CONSTRUCTED WITH SELECT FILL IN THE MSE REINFORCEMENT ZONE AND WITH COMMON BORROW IN THE RETAINED WEDGE. FROM STATION 1117+75 TO STATION 1119+25, SELECT FILL MUST BE USED IN THE MSE REINFORCEMENT ZONE AND IN THE RETAINED WEDGE.

THE WALL SUPPLIER SHAL PERFORM A DETAILED SEISMIC ANALYSIS FOR BACK TO BACK MSE WALLS WITH L/H LESS THAN 1.1, IF NECESSARY, AS REQUIRED BY FHWA PUBLICATION NO. FHWA-NHI-00-043.

(3) PORTIONS OF R6 ARE ON TOP OF CLSM. FOR DETAILS SEE SHEET S4-13

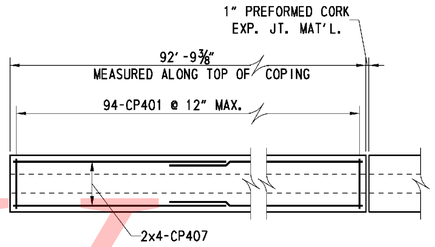

COPING REINFORCING PLAN
(2 REQUIRED)
SCALE: ½" = 1'-0"

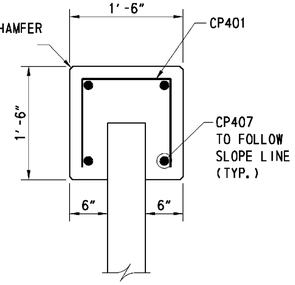

COPING DETAIL
SCALE: 1"= 1'-0"

	SPECIFICATIONS					BENDING DIMENSIONS (FEET-INCHES /QUARTER INCH)							
	QTY.	SIZE	LENGTH	MARK	TYPE	A	B	C	D	H	K	O	REMARKS
COPING	188	4	3-6	CP401	17		1-2	1-2	1-2				
	16	4	47-10 3/16	CP407	STR								BEND BARS IN FIELD AS NEEDED

SEE SHEET R7-07 FOR BAR BEND NOTES

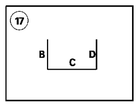

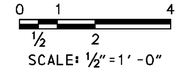

SCALE: ½"=1'-0"

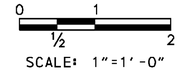

SCALE: 1"=1'-0"

UNOFFICIAL WEBSITE COPY

GENERAL NOTES

SPECIFICATIONS: PROPRIETARY MSE WALLS SHALL BE DESIGNED IN ACCORDANCE WITH THE FOLLOWING:
- AASHTO LRFD BRIDGE DESIGN SPECIFICATIONS, 4TH EDITION WITH ALL CURRENT REVISIONS.
- FEDERAL HIGHWAY ADMINISTRATION PUBLICATION NO. FHWA-NHI-00-043, "MECHANICALLY STABILIZED EARTH WALLS AND REINFORCED SOIL SLOPES DESIGN AND CONSTRUCTION GUIDELINES"

CONCRETE DESIGN SHALL BE PERFORMED USING THE LOAD AND RESISTANCE FACTOR DESIGN METHOD.

CONCRETE: ALL CONCRETE FOR BARRIER AND MOMENT SLABS SHALL BE 4500 PSI. LEVELING PAD CONCRETE SHALL BE 3500 PSI. MIX REQUIREMENTS SHALL CONFORM TO SECTION 812 OF THE DELAWARE DEPARTMENT OF TRANSPORTATION STANDARD SPECIFICATIONS.

CHAMFERS: ALL EXPOSED CORNERS OF CONCRETE SHALL BE CHAMFERED WITH ¾" x ¾" MILLED CHAMFER STRIPS, UNLESS OTHERWISE NOTED EXCEPT ON UNEXPOSED FOOTINGS OR WHERE INDICATED BY THE FOLLOWING NOTATION ON THE PLANS: "DO NOT CHAMFER".

REINFORCING STEEL: REINFORCING STEEL SHALL CONFORM TO ASTM A 615, GRADE 60. MINIMUM COVER FOR ANY BAR SHALL BE 2" UNLESS OTHERWISE NOTED.

FOR TIES AND STIRRUPS, STANDARD ACI BENDING TOLERANCES ARE MODIFIED TO PLUS (+) ZERO INCHES, MINUS (-) NORMAL ACI BENDING TOLERANCE.

ONLY GRADE 60 CAN BE USED ON THIS PROJECT.

ALL REINFORCING STEEL IN THE PARAPET AND MOMENT SLAB SHALL BE EPOXY COATED.

ALL KEYS ARE NOMINAL SIZE.

THE MSE WALL MANUFACTURER MAY SUBSTITUTE ALTERNATE REINFORCING CONFIGURATIONS AND SUBMIT FOR APPROVAL.

EXPANSION AND CONTRACTION JOINTS: THE LOCATION OF THE EXPANSION AND CONTRACTION JOINTS IN THE BARRIER/MOMENT SLAB SHOWN ON THE PLANS MAY BE ADJUSTED TO ACCOMMODATE THE PANEL TYPE USED IN THE PROJECT. ANY CHANGE TO THESE JOINT LOCATIONS SHALL BE SUBMITTED TO THE ENGINEER FOR APPROVAL. EXPANSION JOINTS ARE LABELED "EJ".

LEVELING PAD: THE PROPRIETARY WALL MANUFACTURER MAY RELOCATE THE LEVELING PAD STEPS AT THEIR DISCRETION PROVIDED THAT THE MINIMUM EMBEDMENT IS MAINTAINED. ANY CHANGE TO THE STEP LOCATIONS SHALL BE SUBMITTED TO THE ENGINEER FOR APPROVAL.

ROADWAY LIMITS: THE PROPRIETARY WALL MANUFACTURER SHALL ASSURE THAT PROPOSED PROPRIETARY WALL COMPONENTS ARE POSITIONED SUCH THAT THE DESIGNATED ROADWAY LIMITS ARE NOT ENCROACHED UPON.

TRAFFIC BARRIER JOINTS: TRAFFIC BARRIER/MOMENT SLAB SHALL HAVE CONSTRUCTION JOINTS.

COORDINATION: CONTRACTOR AND PROPRIETARY WALL MANUFACTURER SHALL COORDINATE LOCATIONS OF INLETS AND PIPES WITH LOCATIONS OF PROPRIETARY WALL TIEBACK SYSTEM AND MOMENT SLAB.

ARCHITECTURAL FINISH: THE MSE WALL PANELS SHALL RECEIVE AN ARCHITECTURAL FINISH.

SERVICE LIFE: ALL RETAINING WALL COMPONENTS SHALL BE DESIGNED FOR A MINIMUM SERVICE LIFE OF ~~75~~ 100 YEARS. (1)

WALL SYSTEM: ONLY ONE MSE WALL SYSTEM MAY BE USED ON THIS PROJECT.

ROADWAY SUPERELEVATION: FOR ROADWAY SUPERELEVATION, SEE SUPERELEVATION TABLES.

MSE WALL BACKFILL: MSE WALL BACKFILL SHALL CONSIST OF SPECIFIED BACKFILL.

MOMENT SLAB: THE MOMENT SLAB IS DESIGNED IN ACCORDANCE WITH THE SAME CRITERIA SPECIFIED FOR MECHANICALLY STABILIZED EARTH WALLS IN SECTION 11.10.10.2 OF THE AASHTO LRFD BRIDGE DESIGN SPECIFICATIONS, 4TH ED.

PAY ITEMS: PCC MASONRY, PARAPET, CLASS A (602017)
MECHANICALLY STABILIZED EARTH WALLS (602772)
BAR REINFORCEMENT, EPOXY COATED (604000)

SOIL PROPERTIES FOR DESIGN

SOIL TYPE	UNIT WEIGHT (PCF)	ANGLE OF FRICTION (DEGREES)
SELECT FILL	125	34
COMMON BORROW	130	38
FOUNDATION SOIL	68	24

RAMP G1
VERTICAL CURVE DATA
NO SCALE

CURVE NO. 39

P.I. STA.	1315+87.20
Δ	28°50'21.32" LT
DC	6°51'42.37"
R	835.00'
TANGENT	214.70'
LENGTH	420.29'

CURVE NO. 40

P.I. STA.	1321+39.36
Δ	11°37'48.17" LT
DC	1°41'01.26"
R	3403.00'
TANGENT	346.57'
LENGTH	690.75'

RAMP G1
HORIZONTAL CURVE DATA
NO SCALE

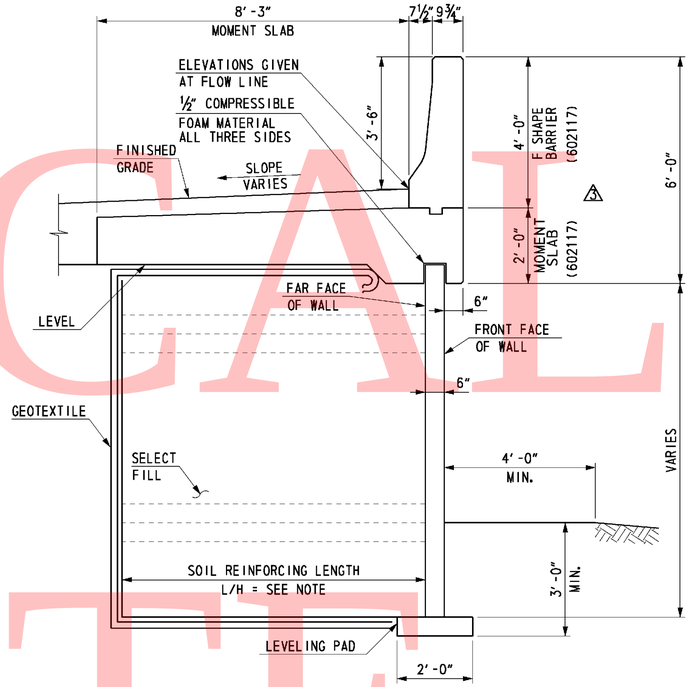

TYPICAL SECTION
(LOOKING AHEAD STATIONS)
SCALE: ½" = 1'-0"

FOUNDATION NOTES

THE FACTORED BEARING RESISTANCE SHALL BE VERIFIED PRIOR TO CONSTRUCTION OF THE MSE WALL.

THE INTERNAL STABILITY OF THE MSE WALL SHALL BE DESIGNED BY THE CONTRACTOR USING THE SOIL PARAMETERS PROVIDED FOR EACH STRUCTURE LOCATION. THE INTERNAL STABILITY SHOULD BE SIGNED AND SEALED BY A PROFESSIONAL ENGINEER LICENSED IN THE STATE OF DELAWARE AS INDICATED IN THE PROJECT SPECIFICATIONS. THE FACTORED APPLIED BEARING STRESS SHALL NOT EXCEED THE FACTORED BEARING RESISTANCE.

GROUNDWATER MAY BE ENCOUNTERED DURING EXCAVATION TO THE LEVELING PAD AND DURING CONSTRUCTION OF THIS RETAINING WALL. IT IS THE CONTRACTOR'S RESPONSIBILITY TO PROVIDE A RELATIVELY DRY EXCAVATION, INCLUDING DETERMINING APPROPRIATE DEWATERING METHODS DURING CONSTRUCTION.

(1) A QUARANTINE PERIOD OF ~~APPROXIMATELY~~ 30-DAYS IS REQUIRED AFTER CONSTRUCTION OF THE FULL HEIGHT OF THE MSE WALL IS ACHIEVED. THE ENGINEER SHALL APPROVE THE COMPLETION OF THE QUARANTINE PERIOD PRIOR TO CONSTRUCTION OF ANY MOMENT SLABS OR PARAPETS.

RETAINING WALL 7 FROM RAMP G1 STA 1317+60.83 TO STA 1318+00 MAY BE CONSTRUCTED WITH SELECT FILL FOR THE FULL HEIGHT OF THE RETAINING WALL. THERE WILL BE NO BACKFILL BETWEEN THE WALLS. THE MINIMUM REINFORCEMENT LENGTH TO HEIGHT RATIO FOR RETAINING WALL 7 IS L/H=0.9. FROM RAMP G1 STA 1318+00 TO STA 1356+88 (END OF WALL), THE REINFORCEMENT LENGTH TO HEIGHT RATIO MUST BE L/H = 1.1. COMMON BORROW MAY BE USED AS BACKFILL BEHIND THE REINFORCEMENT ZONE.

THE DESIGN UNIT WEIGHT INDICATED IN SOIL PROPERTIES TABLE HAS BEEN ADJUSTED DUE TO THE PRESENCE OF SHALLOW GROUNDWATER.

THE WALL SUPPLIER SHAL PERFORM A DETAILED SEISMIC ANALYSIS FOR BACK TO BACK MSE WALLS WITH L/H LESS THAN 1.1, IF NECESSARY, AS REQUIRED BY FHWA PUBLICATION NO. FHWA-NHI-00-043..

0 1 4
½ 2
SCALE: ½"=1'-0"

UNOFFICIAL WEBSITE COPY

DELAWARE DEPARTMENT OF TRANSPORTATION	ADDENDUMS / REVISIONS		SR1 / I-95 INTERCHANGE	CONTRACT 28-090-03	BRIDGE NO.	RETAINING WALL 7 GENERAL NOTES AND TYPICAL SECTION	R7-01 SHEET NO. 559
	ADDENDUM NO. (1), UPDATED NOTES AND TYPICAL SECTION, 02/18/11, JSW			COUNTY NEW CASTLE	DESIGNED BY: JMS		TOTAL SHTS. 803
					CHECKED BY: JSW		

2/14/2011 9:13:41 AM
M:\PROJECTS\2003\03059_DELTRNPK\SRTWALL\CADD\2809003\PLANS\RD07_WALL-07_SR1DGN

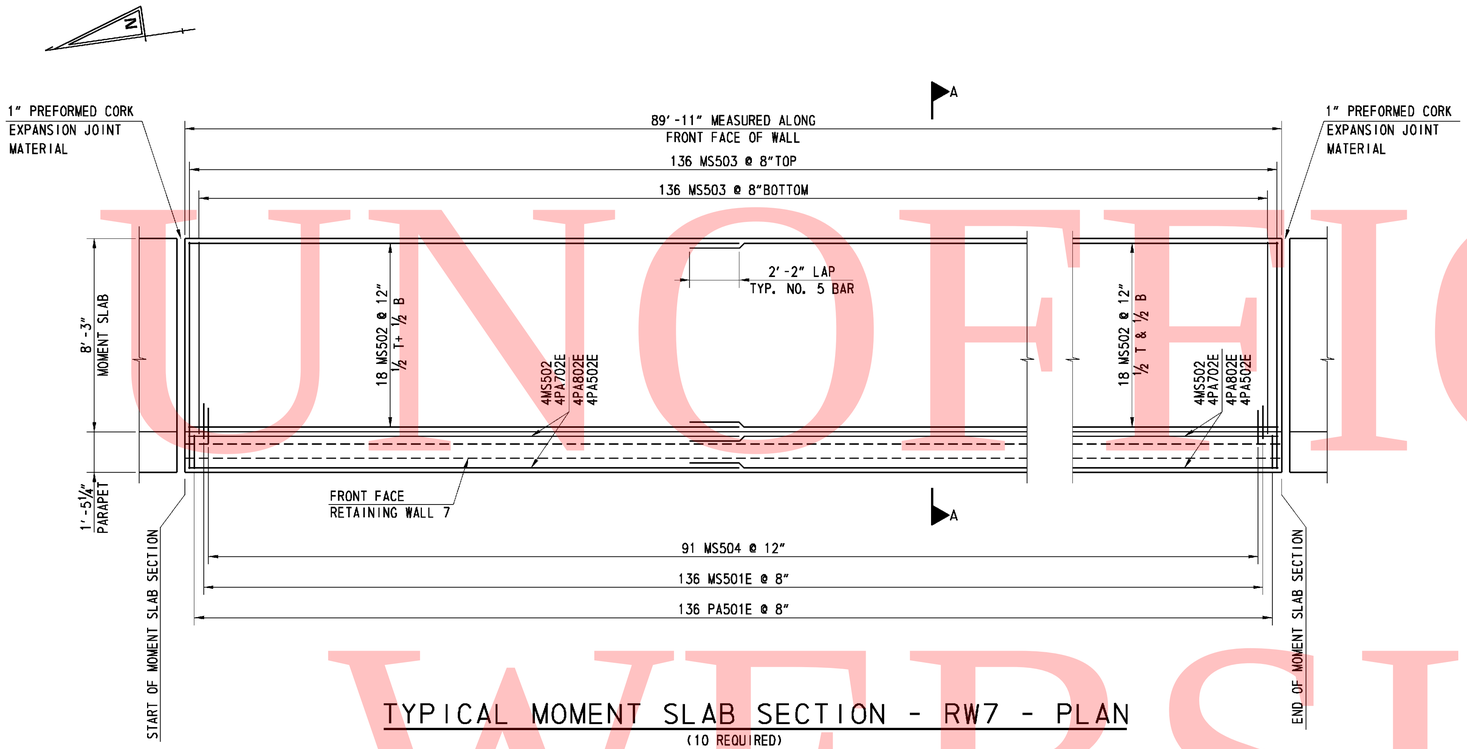

TYPICAL MOMENT SLAB SECTION - RW7 - PLAN

(10 REQUIRED)
NOT TO SCALE

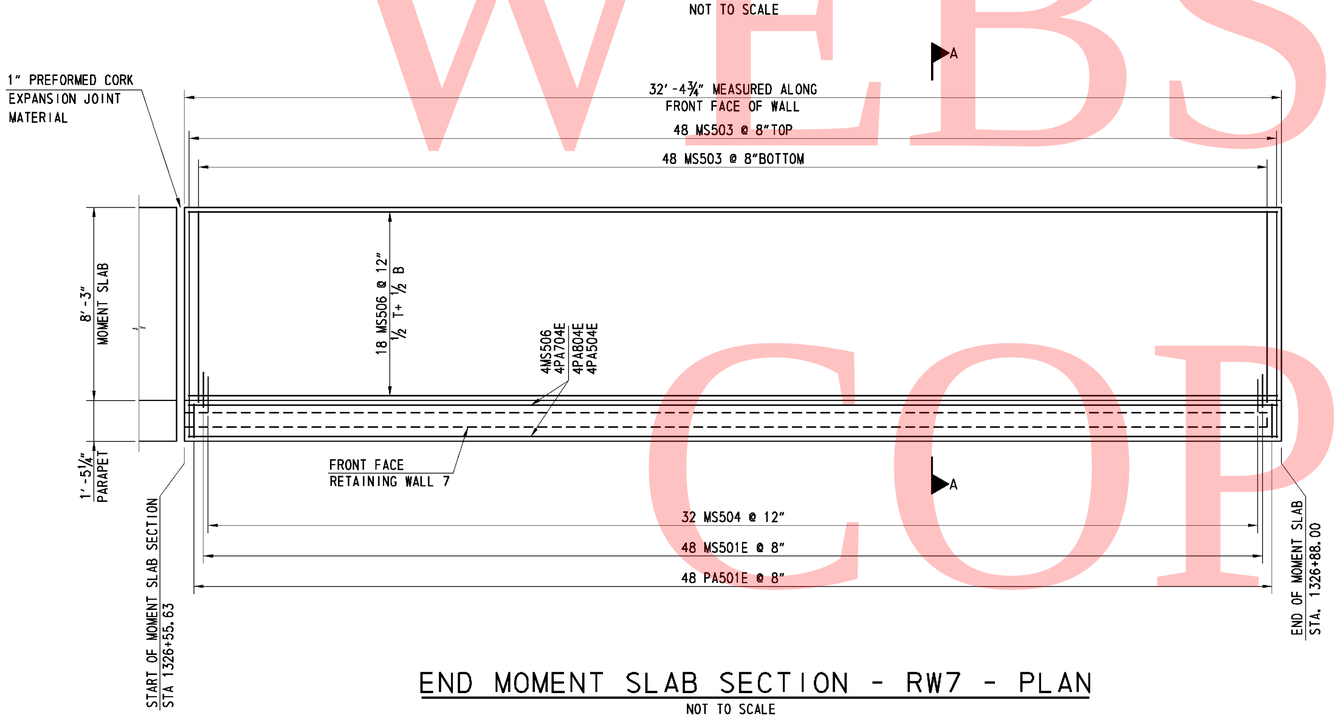

END MOMENT SLAB SECTION - RW7 - PLAN

NOT TO SCALE

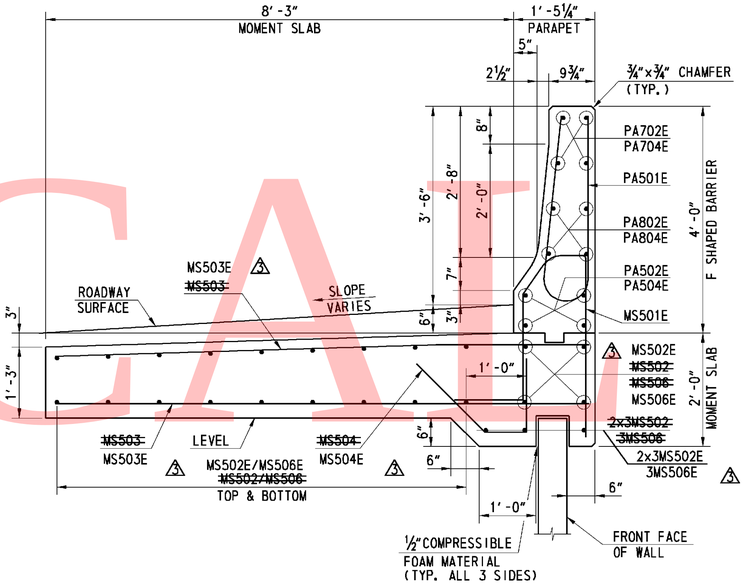

SECTION A-A

SCALE: ¾" = 1'-0"

0 ½ 1 2 4

SCALE: ¾"=1'-0"

UNOFFICIAL WEBSITE COPY

DELAWARE DEPARTMENT OF TRANSPORTATION	ADDENDUMS / REVISIONS ADDENDUM NO. 2, UPDATED TYPICAL SECTION, 02/18/11, JSW		SR1 / I-95 INTERCHANGE	CONTRACT 28-090-03 COUNTY NEW CASTLE	BRIDGE NO. DESIGNED BY: JMS CHECKED BY: JSW	RETAINING WALL 7 MOMENT SLAB AND BARRIER REINFORCING	R7-06 SHEET NO. 564 TOTAL SHTS. 803

2/14/2011 10:00:31 AM
M:\PROJECTS\2003\03059_DELTRNPK\SR1MALL\CADD\2809003\PLANS\RD40_WALL-07_DET_SR1.DGN

(1) ANY MARK NUMBER WITH SUFFIX 'E' DENOTES EPOXY-COATED REINFORCING STEEL.

(2) ALL MARK 'LOCATION PREFIXES' SHALL CONSIST OF TWO LETTERS AND ARE AS FOLLOWS: MS = MOMENT SLAB, PA = BARRIER/PARAPET

RETAINING WALL 7

SPECIFICATIONS					BENDING DIMENSIONS (FEET-INCHES /QUARTER INCH)											
QTY.	SIZE	LENGTH	MARK	TYPE	A	B	C	D	E	F/R	G	H	J	K	O	REMARKS
1408	5	7-7 5/16	PA501E	H1		3-3	1-1 3/16	3-3 1/8		0-4 3/16		0-5				
80	5	45-10 1/2	PA502E	STR												BEND BARS IN FIELD AS NEEDED
80	7	46-8	PA702E	STR												BEND BARS IN FIELD AS NEEDED
4	7	32-2	PA704E	STR												BEND BARS IN FIELD AS NEEDED
80	8	47-3	PA802E	STR												BEND BARS IN FIELD AS NEEDED
4	8	32-2	PA804E	STR												BEND BARS IN FIELD AS NEEDED
4	5	32-2	PA504E	STR												BEND BARS IN FIELD AS NEEDED
1408	5	7-8 15/16	MS501E	T15	0	2-9	0-8 3/8	0-8 1/2	2-7	1-0		2-7	0-4 7/8	0-7	1-1 1/4	
440	5	45-10 1/2	MS502 E	STR												BEND BARS IN FIELD AS NEEDED
2816	5	9-4 1/4	MS503 E	STR												
942	5	3-5	MS504 E	16	0	1-0	1-0	1-5				1-0	1-0			
25	5	32-2	MS506 E	STR												BEND BARS IN FIELD AS NEEDED
			(3)													

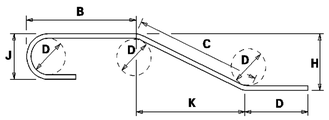

NOTES:
1. FIGURES SHOWN IN CIRCLES REPRESENT BAR BEND TYPES.
2. STANDARD BAR BENDS INCLUDE ONLY TYPES 1-32, S1-S12, AND T1-T16.
3. ALL DIMENSIONS ARE OUT-TO-OUT OF BAR EXCEPT "A" AND "G" ON STANDARD 180° AND 135° HOOKS.
4. "J" DIMENSIONS ON 180° HOOKS TO BE SHOWN ONLY WHERE NECESSARY TO RESTRICT HOOK SIZE, OTHERWISE STANDARD HOOKS ARE TO BE USED.
5. WHERE "J" IS NOT SHOWN, "J" WILL BE KEPT EQUAL TO OR LESS THAN "H" ON TRUSS BARS. WHERE "J" CAN EXCEED "H", IT SHALL BE SHOWN.
6. "H" DIMENSIONS OF STIRRUPS TO BE SHOWN WHERE NECESSARY TO FIT WITHIN THE CONCRETE.
7. UNLESS OTHERWISE NOTED, DIAMETER "D" IS THE SAME FOR ALL BENDS AND HOOKS ON A BAR.
8. WHERE SLOPE DIFFERS FROM 45° OFFSET, "H" AND "K" MUST BE SHOWN.
9. WHERE BARS ARE TO BE BENT MORE ACCURATELY THAN STANDARD BENDING TOLERANCES, BENDING DIMENSIONS WHICH REQUIRE CLOSER FABRICATION SHOULD HAVE LIMITS INDICATED.
10. FOR RECOMMENDED DIAMETER "D", OF BENDS, HOOKS, ETC., REFER TO TABLE AT RIGHT, 'CRSI' OR 'ACI' TABLES.
11. TYPE S1-S12, T1-T16 APPLY TO BAR SIZES 3 THROUGH 6.

ASTM STANDARD ENGLISH REINFORCING BARS				RECOMMENDED END HOOKS, APPLICABLE TO ALL GRADES				
	NOMINAL DIMENSIONS				180° HOOKS		90° HOOKS	
BAR SIZE	DIAMETER (inches)	AREA (inches²)	WEIGHT (lbs./ft.)	D	A OR G	J	A OR G	
3	0.375	0.110	0.376	2"	5"	3"	6"	
4	0.500	0.200	0.668	3"	6"	4"	8"	
5	0.625	0.310	1.043	3"	7"	5"	10"	
6	0.750	0.440	1.502	4"	8"	6"	1'-0"	
7	0.875	0.600	2.044	5"	10"	7"	1'-2"	
8	1.000	0.790	2.670	6"	11"	8"	1'-4"	
9	1.128	1.000	3.400	9"	1'-3"	11"	1'-7"	
10	1.270	1.270	4.303	10"	1'-5"	1'-1"	1'-10"	
11	1.410	1.560	5.313	1'-0"	1'-7"	1'-2"	2'-0"	
14	1.693	2.250	7.650	1'-6"	2'-3"	1'-9"	2'-7"	
18	2.257	4.000	13.600	2'-0"	3'-0"	2'-4"	3'-5"	

STANDARD BAR BENDS

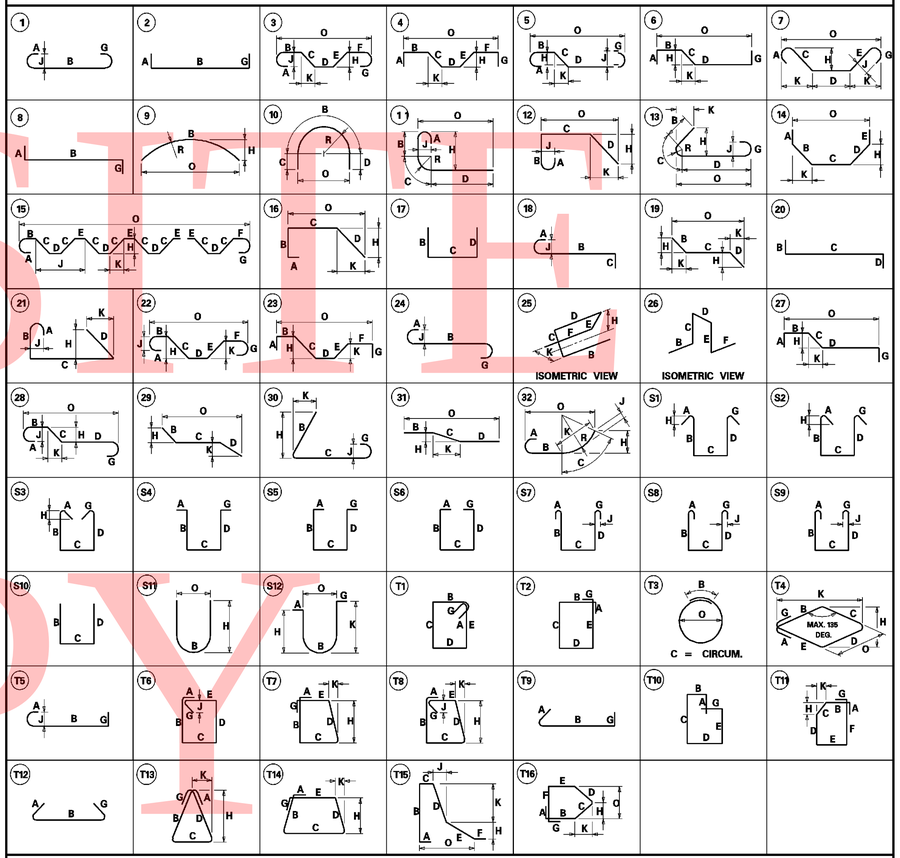

SPECIAL BAR BENDS

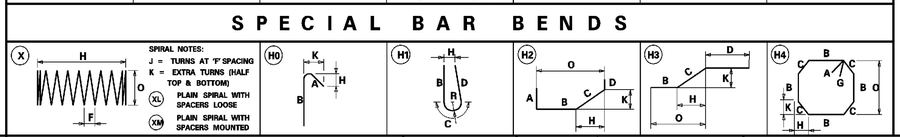

UNOFFICIAL WEBSITE COPY

2/14/2011 10:15:14 AM
M:\PROJECTS\2003\03059_DELTRNPK\SRTMALL\CADD\2809003\PLANS\RD41_WALL-07_BAR_SR1.DGN

DELAWARE DEPARTMENT OF TRANSPORTATION

ADDENDUMS / REVISIONS	
ADDENDUM NO. (3), UPDATED BAR LIST,	
02/18/11, JSW	

SR1 / I-95 INTERCHANGE

CONTRACT	BRIDGE NO.	
28-090-03	DESIGNED BY:	JMS
COUNTY	CHECKED BY:	JSW
NEW CASTLE		

RETAINING WALL 7
REINFORCING BAR LIST

R7-07

SHEET NO.	TOTAL SHTS.
565	803

GENERAL NOTES

SPECIFICATIONS: PROPRIETARY MSE WALLS SHALL BE DESIGNED IN ACCORDANCE WITH THE FOLLOWING:
- AASHTO LRFD BRIDGE DESIGN SPECIFICATIONS, 4TH EDITION WITH ALL CURRENT REVISIONS.
- FEDERAL HIGHWAY ADMINISTRATION PUBLICATION NO. FHWA-NHI-00-043, "MECHANICALLY STABILIZED EARTH WALLS AND REINFORCED SOIL SLOPES DESIGN AND CONSTRUCTION GUIDELINES"

CONCRETE: CONCRETE DESIGN SHALL BE PERFORMED USING THE LOAD AND RESISTANCE FACTOR DESIGN METHOD.

COPING CONCRETE SHALL BE 3500 PSI. MIX REQUIREMENTS SHALL CONFORM TO SECTION 812 OF THE DELAWARE DEPARTMENT OF TRANSPORTATION STANDARD SPECIFICATIONS.

CHAMFERS: ALL EXPOSED CORNERS OF CONCRETE SHALL BE CHAMFERED WITH ¾" x ¾" MILLED CHAMFER STRIPS, UNLESS OTHERWISE NOTED EXCEPT ON UNEXPOSED FOOTINGS OR WHERE INDICATED BY THE FOLLOWING NOTATION ON THE PLANS: "DO NOT CHAMFER".

REINFORCING STEEL: REINFORCING STEEL SHALL CONFORM TO ASTM A 615, GRADE 60. MINIMUM COVER FOR ANY BAR SHALL BE 2" UNLESS OTHERWISE NOTED.

FOR TIES AND STIRRUPS, STANDARD ACI BENDING TOLERANCES ARE MODIFIED TO PLUS (+) ZERO INCHES, MINUS (-) NORMAL ACI BENDING TOLERANCE.

ONLY GRADE 60 CAN BE USED ON THIS PROJECT.

ALL REINFORCING STEEL IN THE COPING SHALL BE EPOXY COATED.

ALL KEYS ARE NOMINAL SIZE.

THE MSE WALL MANUFACTURER MAY SUBSTITUTE ALTERNATE REINFORCING CONFIGURATIONS AND SUBMIT FOR APPROVAL.

EXPANSION AND CONTRACTION JOINTS: THE LOCATION OF THE EXPANSION AND CONTRACTION JOINTS IN THE COPING SHOWN ON THE PLANS MAY BE ADJUSTED TO ACCOMMODATE THE PANEL TYPE USED IN THE PROJECT. ANY CHANGE TO THESE JOINT LOCATIONS SHALL BE SUBMITTED TO THE ENGINEER FOR APPROVAL. EXPANSION JOINTS ARE LABELED "EJ".

LEVELING PAD: THE PROPRIETARY WALL MANUFACTURER MAY RELOCATE THE LEVELING PAD STEPS AT THEIR DISCRETION PROVIDED THAT THE MINIMUM EMBEDMENT IS MAINTAINED. ANY CHANGE TO THE STEP LOCATIONS SHALL BE SUBMITTED TO THE ENGINEER FOR APPROVAL.

ROADWAY LIMITS: THE PROPRIETARY WALL MANUFACTURER SHALL ASSURE THAT PROPOSED PROPRIETARY WALL COMPONENTS ARE POSITIONED SUCH THAT THE DESIGNATED ROADWAY LIMITS ARE NOT ENCROACHED UPON.

COPING JOINTS: COPING SHALL HAVE CONSTRUCTION JOINTS.

COORDINATION: CONTRACTOR AND PROPRIETARY WALL MANUFACTURER SHALL COORDINATE LOCATIONS OF INLETS AND PIPES WITH LOCATIONS OF PROPRIETARY WALL TIEBACK SYSTEM.

ARCHITECTURAL FINISH: THE MSE WALL PANELS SHALL RECEIVE AN ARCHITECTURAL FINISH.

SERVICE LIFE: ALL RETAINING WALL COMPONENTS SHALL BE DESIGNED FOR A MINIMUM SERVICE LIFE OF ~~75~~ 100 △3 YEARS.

WALL SYSTEM: ONLY ONE MSE WALL SYSTEM MAY BE USED ON THIS PROJECT.

ROADWAY SUPERELEVATION: FOR ROADWAY SUPERELEVATION, SEE SUPERELEVATION TABLES.

MSE WALL BACKFILL: MSE WALL BACKFILL SHALL CONSIST OF SPECIFIED BACKFILL.

PAY ITEMS: MECHANICALLY STABILIZED EARTH WALLS (602772)
PCC MASONRY FOR MSE WALLS (602773)
BAR REINFORCEMENT, EPOXY COATED (604000)

FOUNDATION NOTES

THE FACTORED BEARING RESISTANCE SHALL BE VERIFIED PRIOR TO CONSTRUCTION OF THE MSE WALL.

THE INTERNAL STABILITY OF THE MSE WALL SHALL BE DESIGNED BY THE CONTRACTOR USING THE SOIL PARAMETERS PROVIDED FOR EACH STRUCTURE LOCATION. THE INTERNAL STABILITY SHOULD BE SIGNED AND SEALED BY A PROFESSIONAL ENGINEER LICENSED IN THE STATE OF DELAWARE AS INDICATED IN THE PROJECT SPECIFICATIONS. THE FACTORED APPLIED BEARING STRESS SHALL NOT EXCEED THE FACTORED BEARING RESISTANCE.

ISOLATED AREAS OF UNDERCUTTING OF EXISTING FILL MAY BE ENCOUNTERED DURING CONSTRUCTION OF THIS RETAINING WALL.

GROUNDWATER MAY BE ENCOUNTERED DURING EXCAVATION TO THE LEVELING PAD AND DURING CONSTRUCTION OF THIS RETAINING WALL. IT IS THE CONTRACTOR'S RESPONSIBILITY TO PROVIDE A RELATIVELY DRY EXCAVATION, INCLUDING DETERMINING APPROPRIATE DEWATERING METHODS DURING CONSTRUCTION.

△2 A QUARANTINE PERIOD OF ~~APPROXIMATELY~~ 30-DAYS IS REQUIRED AFTER CONSTRUCTION OF THE FULL HEIGHT OF THE MSE WALL IS ACHIEVED. THE ENGINEER SHALL APPROVE THE COMPLETION OF THE QUARANTINE PERIOD PRIOR TO CONSTRUCTION OF ANY COPING.

RETAINING WALL 8 FROM RAMP C1 STA 1815+58.62 TO STA 1816+35 MAY BE CONSTRUCTED WITH SELECT FILL FOR THE FULL HEIGHT OF THE RETAINING WALL. THERE WILL BE NO BACKFILL BETWEEN THE WALLS. THE MINIMUM REINFORCEMENT LENGTH TO HEIGHT RATIO FOR RETAINING WALL 8 IS L/H=1.2. FROM RAMP C1 STA 1816+35 TO SR 7 (SB) STA 1815+60, THE REINFORCEMENT LENGTH TO HEIGHT RATIO MUST BE L/H = 1.2. NO. 57 STONE SHOULD BE USED AS BACKFILL BEHIND THE REINFORCEMENT ZONE BETWEEN THESE STATIONS.

THE DESIGN UNIT WEIGHT INDICATED IN SOIL PROPERTIES TABLE HAS BEEN ADJUSTED DUE TO THE PRESENCE OF SHALLOW GROUNDWATER.

THE WALL SUPPLIER SHAL PERFORM A DETAILED SEISMIC ANALYSIS FOR BACK TO BACK MSE WALLS WITH L/H LESS THAN 1.1, IF NECESSARY, AS REQUIRED BY FHWA PUBLICATION NO. FHWA-NHI-00-043.

SOIL PROPERTIES FOR DESIGN

SOIL TYPE	UNIT WEIGHT (PCF)	ANGLE OF FRICTION (DEGREES)
SELECT FILL	125	34
NO. 57 STONE	105	38
FOUNDATION SOIL	68	24

SEE SHEETS 53 & 57 FOR RAMP C1 VERTICAL CURVE DATA.

RAMP C1
VERTICAL CURVE DATA

CURVE NO. 33

P.I. STA.	1815+13.61
△	46°23'34.62" RT
DC	22°55'05.92"
R	250.00'
TANGENT	107.13'
LENGTH	202.42'

RAMP C1
HORIZONTAL CURVE DATA

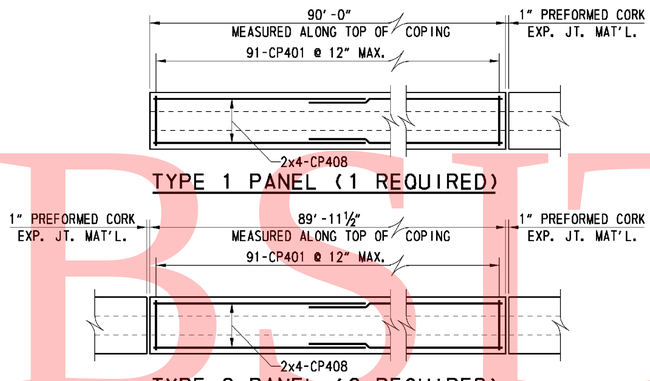

TYPE 1 PANEL (1 REQUIRED)

TYPE 2 PANEL (2 REQUIRED)

TYPE 3 PANEL (1 REQUIRED)

TYPE 4 PANEL (1 REQUIRED)

COPING REINFORCING PLANS

SCALE: ½" = 1'-0"

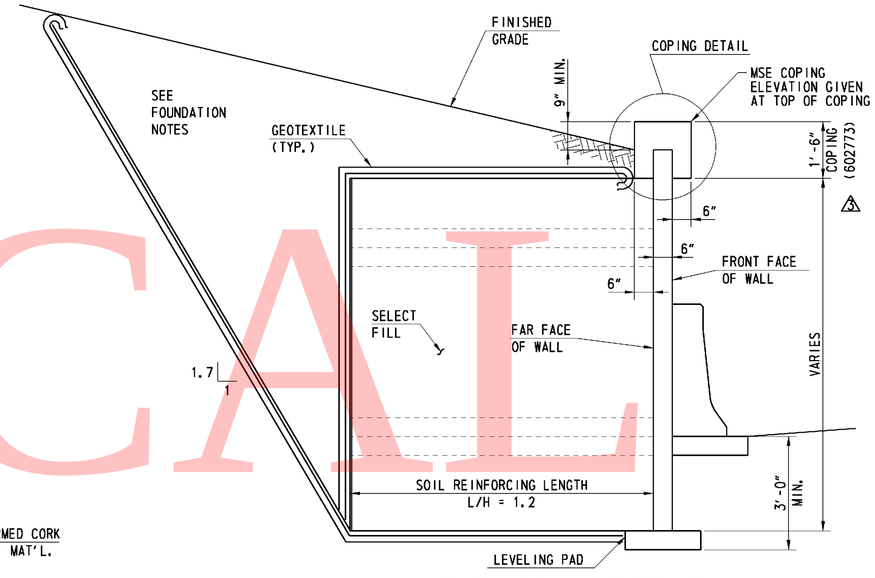

TYPICAL SECTION

(LOOKING BACK STATION)
SCALE: ½" = 1'-0"

	SPECIFICATIONS					BENDING DIMENSIONS (FEET-INCHES /QUARTER INCH)							
	QTY.	SIZE	LENGTH	MARK	TYPE	A	B	C	D	H	K	O	REMARKS
COPING	405	4	3-6	CP401	17		1-2	1-2	1-2				
	24	4	46-5 12	CP408	STR								BEND BARS IN FIELD AS NEEDED
	8	4	52-7 7/8	CP409	STR								BEND BARS IN FIELD AS NEEDED
	2	4	27-9 12	CP410	STR								BEND BARS IN FIELD AS NEEDED
	1	4	4-2 12	CP415	17		1-2	1-10 12	1-2				
	2	4	25-9 15/16	CP416	STR								BEND BARS IN FIELD AS NEEDED

SEE SHEET R7-07 FOR BAR BEND NOTES

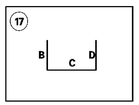

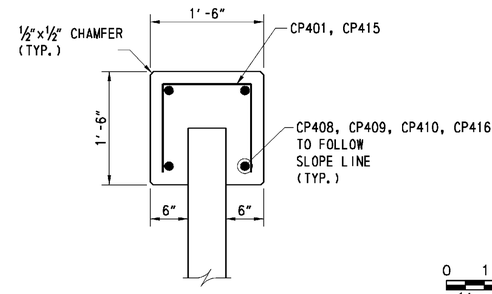

COPING DETAIL

SCALE: 1"= 1'-0"

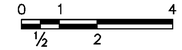

SCALE: ½"=1'-0"

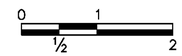

SCALE: 1"=1'-0"

UNOFFICIAL WEBSITE COPY

DELAWARE DEPARTMENT OF TRANSPORTATION	ADDENDUMS / REVISIONS		SR1 / I-95 INTERCHANGE	CONTRACT 28-090-03	BRIDGE NO.	RETAINING WALL 8 GENERAL NOTES AND TYPICAL SECTION	R8-01
	ADDENDUM NO. △2, UPDATED FOUNDATION NOTES, 01/26/11, JSW			COUNTY NEW CASTLE	DESIGNED BY: JMS		SHEET NO. 570
	ADDENDUM NO. △3, UPDATED GENERAL NOTES AND TYPICAL SECTION, 02/18/11, JSW				CHECKED BY: JSW		TOTAL SHTS. 803

2/14/2011 9:13:52 AM
M:\PROJECTS\2003\03059_DEL.TRNPK\SR1MALL\CADD\2809003\PLANS\RD12_WALL-08_SR1.DGN

GENERAL NOTES

SPECIFICATIONS: PROPRIETARY MSE WALLS SHALL BE DESIGNED IN ACCORDANCE WITH THE FOLLOWING:
- AASHTO LRFD BRIDGE DESIGN SPECIFICATIONS, 4TH EDITION WITH ALL CURRENT REVISIONS.
- FEDERAL HIGHWAY ADMINISTRATION PUBLICATION NO. FHWA-NHI-00-043, "MECHANICALLY STABILIZED EARTH WALLS AND REINFORCED SOIL SLOPES DESIGN AND CONSTRUCTION GUIDELINES"

CONCRETE DESIGN SHALL BE PERFORMED USING THE LOAD AND RESISTANCE FACTOR DESIGN METHOD.

CONCRETE: CONCRETE FOR BARRIERS SHALL BE 4500 PSI. LEVELING PAD CONCRETE SHALL BE 3500 PSI. MIX REQUIREMENTS SHALL CONFORM TO SECTION 812 OF THE DELAWARE DEPARTMENT OF TRANSPORTATION STANDARD SPECIFICATIONS.

CHAMFERS: ALL EXPOSED CORNERS OF CONCRETE SHALL BE CHAMFERED WITH ¾" x ¾" MILLED CHAMFER STRIPS, UNLESS OTHERWISE NOTED EXCEPT ON UNEXPOSED FOOTINGS OR WHERE INDICATED BY THE FOLLOWING NOTATION ON THE PLANS: "DO NOT CHAMFER".

REINFORCING STEEL: REINFORCING STEEL SHALL CONFORM TO ASTM A 615, GRADE 60. MINIMUM COVER FOR ANY BAR SHALL BE 2" UNLESS OTHERWISE NOTED.

FOR TIES AND STIRRUPS, STANDARD ACI BENDING TOLERANCES ARE MODIFIED TO PLUS (+) ZERO INCHES, MINUS (-) NORMAL ACI BENDING TOLERANCE.

ONLY GRADE 60 CAN BE USED ON THIS PROJECT.

ALL REINFORCING STEEL IN THE PARAPET SHALL BE EPOXY COATED.

ALL KEYS ARE NOMINAL SIZE.

THE MSE WALL MANUFACTURER MAY SUBSTITUTE ALTERNATE REINFORCING CONFIGURATIONS AND SUBMIT FOR APPROVAL.

EXPANSION AND CONTRACTION JOINTS: THE LOCATION OF THE EXPANSION AND CONTRACTION JOINTS IN THE BARRIER SHOWN ON THE PLANS MAY BE ADJUSTED TO ACCOMMODATE THE PANEL TYPE USED IN THE PROJECT. ANY CHANGE TO THESE JOINT LOCATIONS SHALL BE SUBMITTED TO THE ENGINEER FOR APPROVAL. EXPANSION JOINTS ARE LABELED "EJ".

LEVELING PAD: THE PROPRIETARY WALL MANUFACTURER MAY RELOCATE THE LEVELING PAD STEPS AT THEIR DISCRETION PROVIDED THAT THE MINIMUM EMBEDMENT IS MAINTAINED. ANY CHANGE TO THE STEP LOCATIONS SHALL BE SUBMITTED TO THE ENGINEER FOR APPROVAL.

ROADWAY LIMITS: THE PROPRIETARY WALL MANUFACTURER SHALL ASSURE THAT PROPOSED PROPRIETARY WALL COMPONENTS ARE POSITIONED SUCH THAT THE DESIGNATED ROADWAY LIMITS ARE NOT ENCROACHED UPON.

TRAFFIC BARRIER JOINTS: TRAFFIC BARRIER SHALL HAVE CONSTRUCTION JOINTS.

COORDINATION: CONTRACTOR AND PROPRIETARY WALL MANUFACTURER SHALL COORDINATE LOCATIONS OF INLETS AND PIPES WITH LOCATIONS OF PROPRIETARY WALL TIEBACK SYSTEM.

ARCHITECTURAL FINISH: THE MSE WALL PANELS SHALL RECEIVE AN ARCHITECTURAL FINISH.

SERVICE LIFE: ALL RETAINING WALL COMPONENTS SHALL BE DESIGNED FOR A MINIMUM SERVICE LIFE OF ~~75~~ 100 YEARS. (3)

WALL SYSTEM: ONLY ONE MSE WALL SYSTEM MAY BE USED ON THIS PROJECT.

ROADWAY SUPERELEVATION: FOR ROADWAY SUPERELEVATION, SEE SUPERELEVATION TABLES.

MSE WALL BACKFILL: MSE WALL BACKFILL SHALL CONSIST OF SPECIFIED BACKFILL.

PAY ITEMS: PCC MASONRY, PARAPET, CLASS A, (602017)
BAR REINFORCEMENT, EPOXY COATED (604000)
MECHANICALLY STABILIZED EARTH WALLS (602772)

SOIL PROPERTIES FOR DESIGN

SOIL TYPE	UNIT WEIGHT (PCF)	ANGLE OF FRICTION (DEGREES)
SELECT FILL	125	34
NO. 57 STONE	130	28
FOUNDATION SOIL 1250+84.83 TO 1252+14	92	24
FOUNDATION SOIL 1252+14 TO 1259+50	85	24

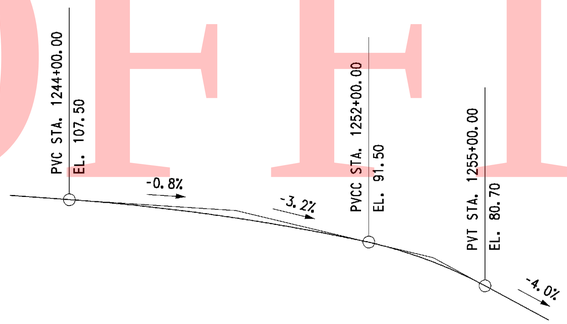

RAMP A
VERTICAL CURVE DATA
NO SCALE

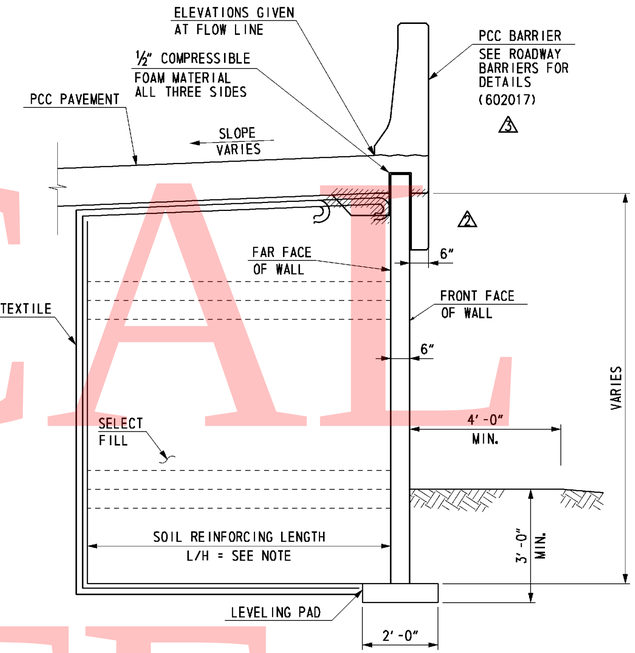

TYPICAL SECTION
(LOOKING AHEAD STATION)
SCALE: ½" = 1'-0"

CURVE NO. 14

P.I. STA.	1254+08.88
△	48°19'31.68" LT
DC	3°05'48.45"
R	1850.00
TANGENT	829.98
LENGTH	1560.36

RAMP A
HORIZONTAL CURVE DATA
NO SCALE

FOUNDATION NOTES

THE FACTORED BEARING RESISTANCE SHALL BE VERIFIED PRIOR TO CONSTRUCTION OF THE MSE WALL.

THE INTERNAL STABILITY OF THE MSE WALL SHALL BE DESIGNED BY THE CONTRACTOR USING THE SOIL PARAMETERS PROVIDED FOR EACH STRUCTURE LOCATION. THE INTERNAL STABILITY SHOULD BE SIGNED AND SEALED BY A PROFESSIONAL ENGINEER LICENSED IN THE STATE OF DELAWARE AS INDICATED IN THE PROJECT SPECIFICATIONS. THE FACTORED APPLIED BEARING STRESS SHALL NOT EXCEED THE FACTORED BEARING RESISTANCE.

ISOLATED AREAS OF UNDERCUTTING OF EXISTING FILL MAY BE ENCOUNTERED DURING CONSTRUCTION OF THIS RETAINING WALL.

GROUNDWATER MAY BE ENCOUNTERED DURING EXCAVATION TO THE LEVELING PAD AND DURING CONSTRUCTION OF THIS RETAINING WALL. IT IS THE CONTRACTOR'S RESPONSIBILITY TO PROVIDE A RELATIVELY DRY EXCAVATION, INCLUDING DETERMINING APPROPRIATE DEWATERING METHODS DURING CONSTRUCTION.

(2) A QUARANTINE PERIOD OF ~~APPROXIMATELY~~ 30-DAYS IS REQUIRED AFTER CONSTRUCTION OF THE FULL HEIGHT OF THE MSE WALL IS ACHIEVED. THE ENGINEER SHALL APPROVE THE COMPLETION OF THE QUARANTINE PERIOD PRIOR TO CONSTRUCTION OF ANY PARAPETS.

RETAINING WALL 9 FROM RAMP A STA 1250+84.83 TO STA 1252+14 MAY BE CONSTRUCTED WITH SELECT FILL FOR THE FULL HEIGHT OF THE RETAINING WALL. THE MINIMUM REINFORCEMENT LENGTH TO HEIGHT RATIO FOR RETAINING WALL 9 IS L/H=0.7. FROM RAMP A STA 1252+14 TO STA 1259+50, THE REINFORCEMENT LENGTH TO HEIGHT RATIO MUST BE L/H = 1.0. COMMON BORROW MAY BE USED AS BACKFILL BEHIND THE REINFORCEMENT ZONE.

THE DESIGN UNIT WEIGHT INDICATED IN SOIL PROPERTIES TABLE HAS BEEN ADJUSTED DUE TO THE PRESENCE OF SHALLOW GROUNDWATER.

0 1 4
½ 2
SCALE: ½"=1'-0"

UNOFFICIAL WEBSITE COPY

2/14/2011 11:39:40 AM
M:\PROJECTS\2003\03059_DELTRNPK\SR1MALL\CADD\2809003\PLANS\RD15_WALL-09_SR1.DGN

DELAWARE DEPARTMENT OF TRANSPORTATION

ADDENDUMS / REVISIONS	
ADDENDUM NO. (2), UPDATED FOUNDATION NOTES, SECTION, 01/26/11, JSW	
ADDENDUM NO. (3), UPDATED GENERAL NOTES AND TYPICAL SECTION, 02/18/11, JSW	

SR1 / I-95 INTERCHANGE

CONTRACT	28-090-03
COUNTY	NEW CASTLE
BRIDGE NO.	
DESIGNED BY:	JMS
CHECKED BY:	JSW

RETAINING WALL 9
GENERAL NOTES AND TYPICAL SECTION

R9-01
SHEET NO. 575
TOTAL SHTS. 803

GENERAL NOTES

SPECIFICATIONS: PROPRIETARY MSE WALLS SHALL BE DESIGNED IN ACCORDANCE WITH THE FOLLOWING:
- AASHTO LRFD BRIDGE DESIGN SPECIFICATIONS, 4TH EDITION WITH ALL CURRENT REVISIONS.
- FEDERAL HIGHWAY ADMINISTRATION PUBLICATION NO. FHWA-NHI-00-043, "MECHANICALLY STABILIZED EARTH WALLS AND REINFORCED SOIL SLOPES DESIGN AND CONSTRUCTION GUIDELINES"

CONCRETE DESIGN SHALL BE PERFORMED USING THE LOAD AND RESISTANCE FACTOR DESIGN METHOD.

CONCRETE: ALL CONCRETE FOR BARRIERS AND MOMENT SLABS SHALL BE 4500 PSI. LEVELING PAD CONCRETE SHALL BE 3500 PSI. MIX REQUIREMENTS SHALL CONFORM TO SECTION 812 OF THE DELAWARE DEPARTMENT OF TRANSPORTATION STANDARD SPECIFICATIONS.

CHAMFERS: ALL EXPOSED CORNERS OF CONCRETE SHALL BE CHAMFERED WITH ¾" x ¾" MILLED CHAMFER STRIPS, UNLESS OTHERWISE NOTED EXCEPT ON UNEXPOSED FOOTINGS OR WHERE INDICATED BY THE FOLLOWING NOTATION ON THE PLANS: "DO NOT CHAMFER".

REINFORCING STEEL: REINFORCING STEEL SHALL CONFORM TO ASTM A 615, GRADE 60. MINIMUM COVER FOR ANY BAR SHALL BE 2" UNLESS OTHERWISE NOTED.

FOR TIES AND STIRRUPS, STANDARD ACI BENDING TOLERANCES ARE MODIFIED TO PLUS (+) ZERO INCHES, MINUS (-) NORMAL ACI BENDING TOLERANCE.

ONLY GRADE 60 CAN BE USED ON THIS PROJECT.

ALL REINFORCING STEEL IN THE PARAPET AND MOMENT SLAB SHALL BE EPOXY COATED.

ALL KEYS ARE NOMINAL SIZE.

THE MSE WALL MANUFACTURER MAY SUBSTITUTE ALTERNATE REINFORCING CONFIGURATIONS AND SUBMIT FOR APPROVAL.

EXPANSION AND CONTRACTION JOINTS: THE LOCATION OF THE EXPANSION AND CONTRACTION JOINTS IN THE BARRIER/MOMENT SLAB SHOWN ON THE PLANS MAY BE ADJUSTED TO ACCOMMODATE THE PANEL TYPE USED IN THE PROJECT. ANY CHANGE TO THESE JOINT LOCATIONS SHALL BE SUBMITTED TO THE ENGINEER FOR APPROVAL. EXPANSION JOINTS ARE LABELED "EJ".

LEVELING PAD: THE PROPRIETARY WALL MANUFACTURER MAY RELOCATE THE LEVELING PAD STEPS AT THEIR DISCRETION PROVIDED THAT THE MINIMUM EMBEDMENT IS MAINTAINED. ANY CHANGE TO THE STEP LOCATIONS SHALL BE SUBMITTED TO THE ENGINEER FOR APPROVAL.

ROADWAY LIMITS: THE PROPRIETARY WALL MANUFACTURER SHALL ASSURE THAT PROPOSED PROPRIETARY WALL COMPONENTS ARE POSITIONED SUCH THAT THE DESIGNATED ROADWAY LIMITS ARE NOT ENCROACHED UPON.

TRAFFIC BARRIER JOINTS: TRAFFIC BARRIER/MOMENT SLAB SHALL HAVE CONSTRUCTION JOINTS.

COORDINATION: CONTRACTOR AND PROPRIETARY WALL MANUFACTURER SHALL COORDINATE LOCATIONS OF INLETS AND PIPES WITH LOCATIONS OF PROPRIETARY WALL TIEBACK SYSTEM AND MOMENT SLAB.

ARCHITECTURAL FINISH: THE MSE WALL PANELS SHALL RECEIVE AN ARCHITECTURAL FINISH.

SERVICE LIFE: ALL RETAINING WALL COMPONENTS SHALL BE DESIGNED FOR A MINIMUM SERVICE LIFE OF ~~75~~ 100 YEARS. (3)

WALL SYSTEM: ONLY ONE MSE WALL SYSTEM MAY BE USED ON THIS PROJECT.

ROADWAY SUPERELEVATION: FOR ROADWAY SUPERELEVATION, SEE SUPERELEVATION TABLES.

MSE WALL BACKFILL: MSE WALL BACKFILL SHALL CONSIST OF SPECIFIED BACKFILL.

MOMENT SLAB: THE MOMENT SLAB IS DESIGNED IN ACCORDANCE WITH THE SAME CRITERIA SPECIFIED FOR MECHANICALLY STABILIZED EARTH WALLS IN SECTION 11.10.10.2 OF THE AASHTO LRFD BRIDGE DESIGN SPECIFICATIONS, 4TH ED.

PAY ITEMS: PCC MASONRY, PARAPET, CLASS A (602017)
MECHANICALLY STABILIZED EARTH WALLS (602772)
BAR REINFORCEMENT, EPOXY COATED (604000)

SOIL PROPERTIES FOR DESIGN

SOIL TYPE	UNIT WEIGHT (PCF)	ANGLE OF FRICTION (DEGREES)
SELECT FILL	125	34
NO. 57 STONE	105	38
FOUNDATION SOIL	68	24

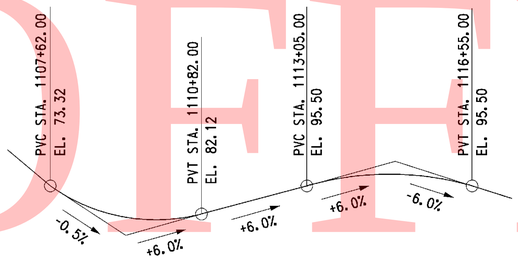

RAMP C
VERTICAL CURVE DATA
NO SCALE

CURVE NO. 30

P. I. STA.	1113+47.25
△	77°59'15.14" LT
DC	11°48'48.82"
R	485.00'
TANGENT	392.66'
LENGTH	660.15'

RAMP C
HORIZONTAL CURVE DATA
NO SCALE

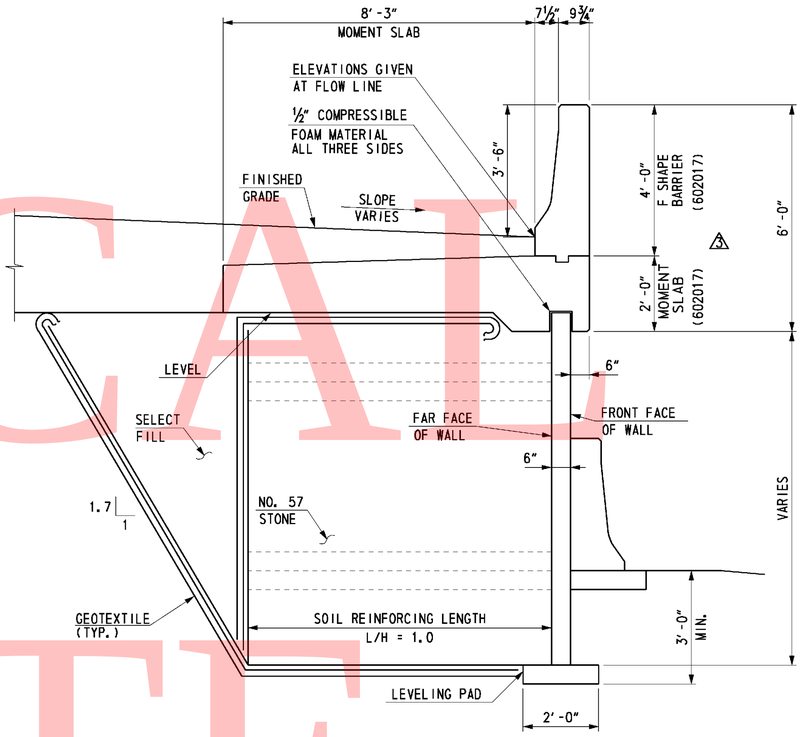

TYPICAL SECTION
(LOOKING BACK STATION)
SCALE: ½" = 1'-0"

FOUNDATION NOTES

THE FACTORED BEARING RESISTANCE SHALL BE VERIFIED PRIOR TO CONSTRUCTION OF THE MSE WALL.

THE INTERNAL STABILITY OF THE MSE WALL SHALL BE DESIGNED BY THE CONTRACTOR USING THE SOIL PARAMETERS PROVIDED FOR EACH STRUCTURE LOCATION. THE INTERNAL STABILITY SHOULD BE SIGNED AND SEALED BY A PROFESSIONAL ENGINEER LICENSED IN THE STATE OF DELAWARE AS INDICATED IN THE PROJECT SPECIFICATIONS. THE FACTORED APPLIED BEARING STRESS SHALL NOT EXCEED THE FACTORED BEARING RESISTANCE.

GROUNDWATER MAY BE ENCOUNTERED DURING EXCAVATION TO THE LEVELING PAD AND DURING CONSTRUCTION OF THIS RETAINING WALL. IT IS THE CONTRACTOR'S RESPONSIBILITY TO PROVIDE A RELATIVELY DRY EXCAVATION, INCLUDING DETERMINING APPROPRIATE DEWATERING METHODS DURING CONSTRUCTION.

(2) A QUARANTINE PERIOD OF ~~APPROXIMATELY~~ 30-DAYS IS REQUIRED AFTER CONSTRUCTION OF THE FULL HEIGHT OF THE MSE WALL IS ACHIEVED. THE ENGINEER SHALL APPROVE THE COMPLETION OF THE QUARANTINE PERIOD PRIOR TO CONSTRUCTION OF ANY MOMENT SLABS OR PARAPETS.

THE DESIGN UNIT WEIGHT INDICATED IN SOIL PROPERTIES TABLE HAS BEEN ADJUSTED DUE TO THE PRESENCE OF SHALLOW GROUNDWATER.

THE WALL SUPPLIER SHAL PERFORM A DETAILED SEISMIC ANALYSIS FOR BACK TO BACK MSE WALLS WITH L/H LESS THAN 1.1, IF NECESSARY, AS REQUIRED BY FHWA PUBLICATION NO. FHWA-NHI-00-043.

0 1 4
½ 2
SCALE: ½"=1'-0"

UNOFFICIAL WEBSITE COPY

2/14/2011 9:19:06 AM
M:\PROJECTS\2003\03059_DELTRNPK\SRIMALL\CADD\2809003\PLANS\RD20_WALL-10_SR1.DGN

DELAWARE DEPARTMENT OF TRANSPORTATION

ADDENDUMS / REVISIONS	
ADDENDUM NO. (2), UPDATED FOUNDATION NOTES, 01/26/11, JSW	
ADDENDUM NO. (3), UPDATED GENERAL NOTES AND TYPICAL SECTION, 02/18/11, JSW	

SR1 / I-95 INTERCHANGE

CONTRACT	28-090-03	BRIDGE NO.	
COUNTY	NEW CASTLE	DESIGNED BY:	JMS
		CHECKED BY:	JSW

RETAINING WALL 10
GENERAL NOTES AND TYPICAL SECTION

R10-01
SHEET NO. 583
TOTAL SHTS. 803

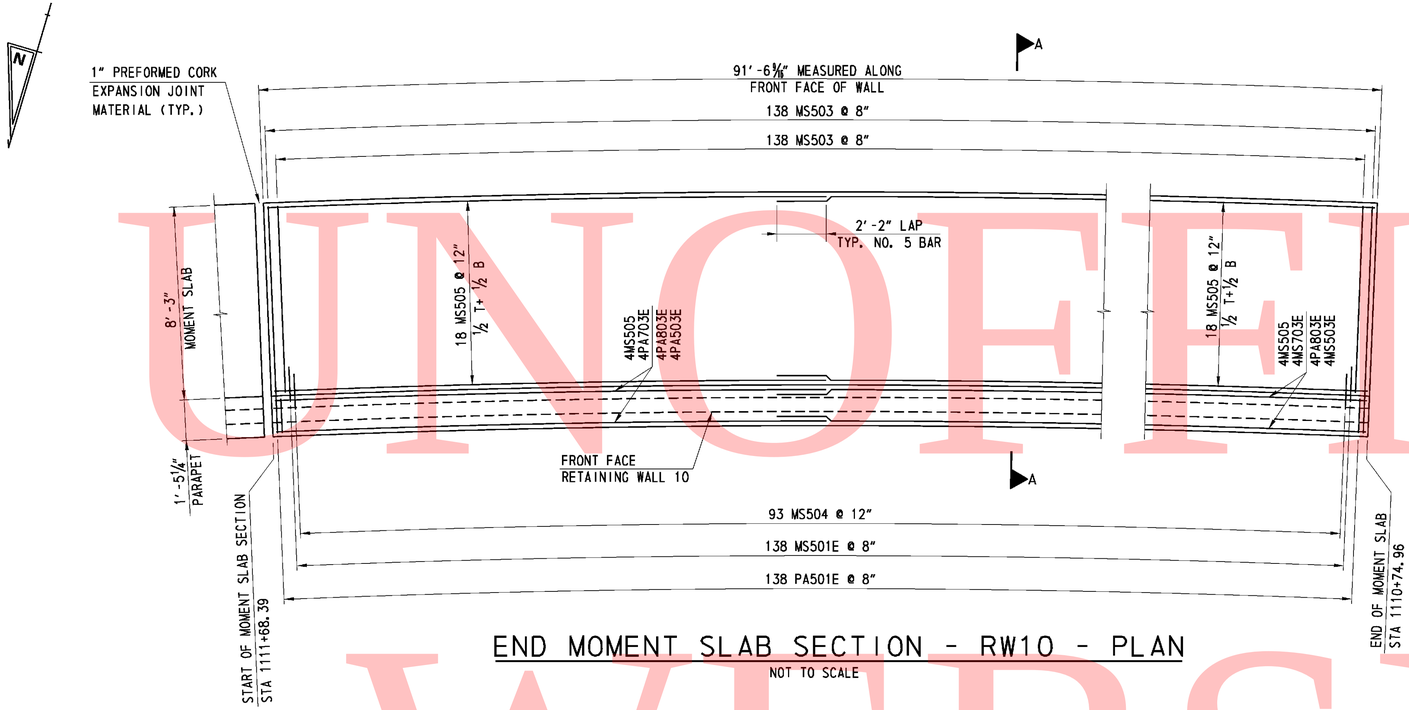

END MOMENT SLAB SECTION - RW10 - PLAN

NOT TO SCALE

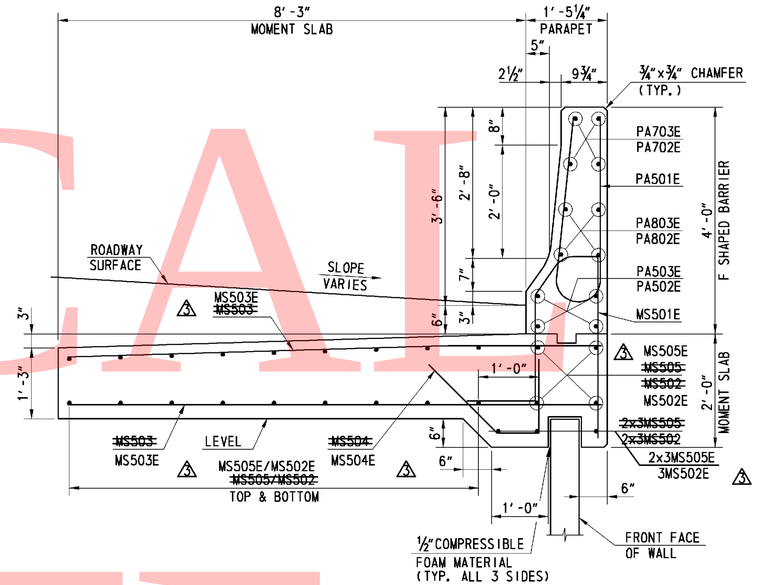

SECTION A-A

SCALE: 3/4" = 1'-0"

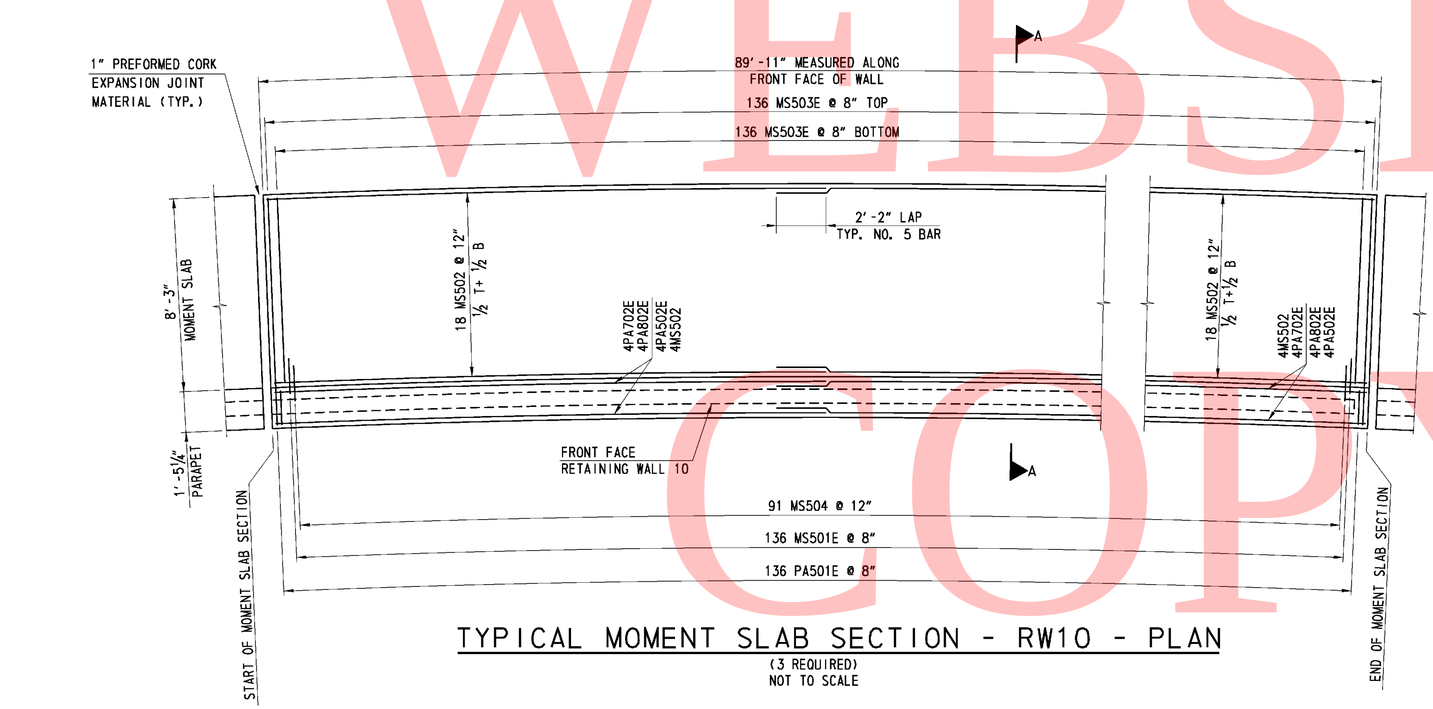

TYPICAL MOMENT SLAB SECTION - RW10 - PLAN

(3 REQUIRED)
NOT TO SCALE

0 1 4
1/2 2
SCALE: 3/4"=1'-0"

UNOFFICIAL WEBSITE COPY

2/14/2011 10:04:40 AM
M:\PROJECTS\2003\03059_DELTRNPK\SR1MALL\CADD\2809003\PLANS\RD42_WALL-10_DET_SR1.DGN

DELAWARE DEPARTMENT OF TRANSPORTATION	ADDENDUMS / REVISIONS ADDENDUM NO. 3, UPDATED TYPICAL SECTION, 02/18/11, JSW	SR1 / I-95 INTERCHANGE	CONTRACT 28-090-03 COUNTY NEW CASTLE	BRIDGE NO. DESIGNED BY: JMS CHECKED BY: JSW	RETAINING WALL 10 MOMENT SLAB AND BARRIER REINFORCING	R10-04 SHEET NO. 586 TOTAL SHTS. 803

(1) ANY MARK NUMBER WITH SUFFIX 'E' DENOTES EPOXY-COATED REINFORCING STEEL.

(2) ALL MARK 'LOCATION PREFIXES' SHALL CONSIST OF TWO LETTERS AND ARE AS FOLLOWS: MS = MOMENT SLAB, PA = BARRIER/PARAPET

RETAINING WALL 10

SPECIFICATIONS					BENDING DIMENSIONS (FEET-INCHES /QUARTER INCH)											
QTY.	SIZE	LENGTH	MARK	TYPE	A	B	C	D	E	F/R	G	H	J	K	O	REMARKS
546	5	7-7 5/16	PA501E	H1		3-3	1-1 3/16	3-3 1/8		0-4 3/16		0-5				
24	5	45-10 1/2	PA502E	STR												BEND BARS IN FIELD AS NEEDED
8	5	46-8 1/4	PA503E	STR												BEND BARS IN FIELD AS NEEDED
24	7	46-8	PA702E	STR												BEND BARS IN FIELD AS NEEDED
8	7	47-5 11/16	PA703E	STR												BEND BARS IN FIELD AS NEEDED
24	8	47-3	PA802E	STR												BEND BARS IN FIELD AS NEEDED
8	8	48-0 11/16	PA803E	STR												BEND BARS IN FIELD AS NEEDED
546	5	7-8 15/16	MS501E	T15	0	2-9	0-8 3/8	0-8 1/2	2-7	1-0		2-7	0-4 7/8	0-7	1-1 1/4	
132	5	45-10 1/2	MS502 E	STR												BEND BARS IN FIELD AS NEEDED
548	5	9-4 1/4	MS503 E	STR												
1092	5	3-5	MS504 E	16	0	1-0	1-0	1-5				1-0	1-0			
50	5	46-8 15/16	MS505 E	STR												BEND BARS IN FIELD AS NEEDED
			(3)													

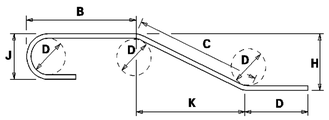

NOTES:
1. FIGURES SHOWN IN CIRCLES REPRESENT BAR BEND TYPES.
2. STANDARD BAR BENDS INCLUDE ONLY TYPES 1-32, S1-S12, AND T1-T16.
3. ALL DIMENSIONS ARE OUT-TO-OUT OF BAR EXCEPT "A" AND "G" ON STANDARD 180° AND 135° HOOKS.
4. "J" DIMENSIONS ON 180° HOOKS TO BE SHOWN ONLY WHERE NECESSARY TO RESTRICT HOOK SIZE, OTHERWISE STANDARD HOOKS ARE TO BE USED.
5. WHERE "J" IS NOT SHOWN, "J" WILL BE KEPT EQUAL TO OR LESS THAN "H" ON TRUSS BARS. WHERE "J" CAN EXCEED "H", IT SHALL BE SHOWN.
6. "H" DIMENSIONS OF STIRRUPS TO BE SHOWN WHERE NECESSARY TO FIT WITHIN THE CONCRETE.
7. UNLESS OTHERWISE NOTED, DIAMETER "D" IS THE SAME FOR ALL BENDS AND HOOKS ON A BAR.
8. WHERE SLOPE DIFFERS FROM 45° OFFSET, "H" AND "K" MUST BE SHOWN.
9. WHERE BARS ARE TO BE BENT MORE ACCURATELY THAN STANDARD BENDING TOLERANCES, BENDING DIMENSIONS WHICH REQUIRE CLOSER FABRICATION SHOULD HAVE LIMITS INDICATED.
10. FOR RECOMMENDED DIAMETER "D", OF BENDS, HOOKS, ETC., REFER TO TABLE AT RIGHT, 'CRSI' OR 'ACI' TABLES.
11. TYPE S1-S12, T1-T16 APPLY TO BAR SIZES 3 THROUGH 6.

ASTM STANDARD ENGLISH REINFORCING BARS				RECOMMENDED END HOOKS, APPLICABLE TO ALL GRADES				
	NOMINAL DIMENSIONS				180° HOOKS		90° HOOKS	
BAR SIZE	DIAMETER (inches)	AREA (inches²)	WEIGHT (lbs./ft.)	D	A OR G	J	A OR G	
3	0.375	0.110	0.376	2"	5"	3"	6"	
4	0.500	0.200	0.668	3"	6"	4"	8"	
5	0.625	0.310	1.043	3"	7"	5"	10"	
6	0.750	0.440	1.502	4"	8"	6"	1'-0"	
7	0.875	0.600	2.044	5"	10"	7"	1'-2"	
8	1.000	0.790	2.670	6"	11"	8"	1'-4"	
9	1.128	1.000	3.400	9"	1'-3"	11"	1'-7"	
10	1.270	1.270	4.303	10"	1'-5"	1'-1"	1'-10"	
11	1.410	1.560	5.313	1'-0"	1'-7"	1'-2"	2'-0"	
14	1.693	2.250	7.650	1'-6"	2'-3"	1'-9"	2'-7"	
18	2.257	4.000	13.600	2'-0"	3'-0"	2'-4"	3'-5"	

STANDARD BAR BENDS

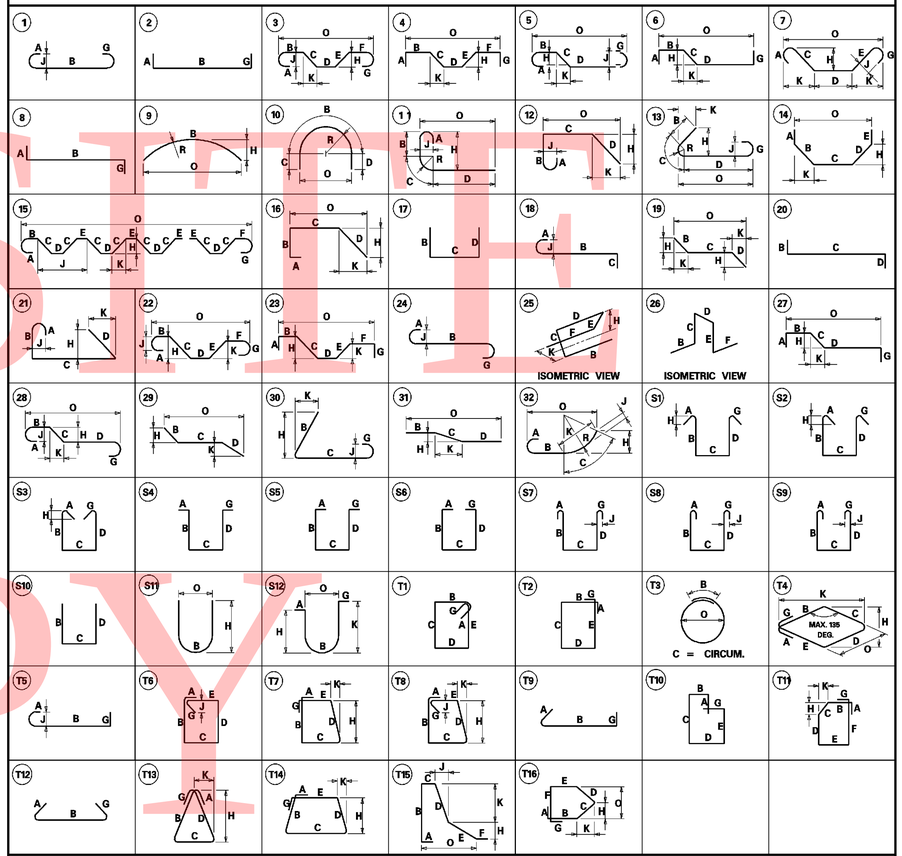

SPECIAL BAR BENDS

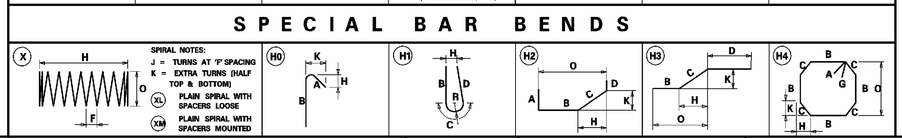

UNOFFICIAL WEBSITE COPY

DELAWARE DEPARTMENT OF TRANSPORTATION	ADDENDUMS / REVISIONS		SR1 / I-95 INTERCHANGE	CONTRACT	28-090-03	BRIDGE NO.		RETAINING WALL 10 REINFORCING BAR LIST	R10-05
	ADDENDUM NO. (3), UPDATED BAR LIST,			COUNTY	NEW CASTLE	DESIGNED BY:	JMS		SHEET NO. 587
	02/18/11, JSW					CHECKED BY:	JSW		TOTAL SHTS. 803

2/14/2011 10:20:29 AM
M:\PROJECTS\2003\03059_DELTRNPK\SRTMALL\CADD\2809003\PLANS\RD43_WALL-10_BAR_SR1.DGN

GENERAL NOTES

SPECIFICATIONS: PROPRIETARY MSE WALLS SHALL BE DESIGNED IN ACCORDANCE WITH THE FOLLOWING:
- AASHTO LRFD BRIDGE DESIGN SPECIFICATIONS, 4TH EDITION WITH ALL CURRENT REVISIONS.
- FEDERAL HIGHWAY ADMINISTRATION PUBLICATION NO. FHWA-NHI-00-043, "MECHANICALLY STABILIZED EARTH WALLS AND REINFORCED SOIL SLOPES DESIGN AND CONSTRUCTION GUIDELINES"

CONCRETE DESIGN SHALL BE PERFORMED USING THE LOAD AND RESISTANCE FACTOR DESIGN METHOD.

CONCRETE: LEVELING PAD CONCRETE SHALL BE 3500 PSI. MIX REQUIREMENTS SHALL CONFORM TO SECTION 812 OF THE DELAWARE DEPARTMENT OF TRANSPORTATION STANDARD SPECIFICATIONS.

CHAMFERS: ALL EXPOSED CORNERS OF CONCRETE SHALL BE CHAMFERED WITH ¾" x ¾" MILLED CHAMFER STRIPS, UNLESS OTHERWISE NOTED EXCEPT ON UNEXPOSED FOOTINGS OR WHERE INDICATED BY THE FOLLOWING NOTATION ON THE PLANS: "DO NOT CHAMFER".

REINFORCING STEEL: REINFORCING STEEL SHALL CONFORM TO ASTM A 615, GRADE 60. MINIMUM COVER FOR ANY BAR SHALL BE 2" UNLESS OTHERWISE NOTED.

FOR TIES AND STIRRUPS, STANDARD ACI BENDING TOLERANCES ARE MODIFIED TO PLUS (+) ZERO INCHES, MINUS (-) NORMAL ACI BENDING TOLERANCE.

ONLY GRADE 60 CAN BE USED ON THIS PROJECT.

ALL REINFORCING STEEL IN THE PARAPET SHALL BE EPOXY COATED.

ALL KEYS ARE NOMINAL SIZE.

THE MSE WALL MANUFACTURER MAY SUBSTITUTE ALTERNATE REINFORCING CONFIGURATIONS AND SUBMIT FOR APPROVAL.

EXPANSION AND CONTRACTION JOINTS: THE LOCATION OF THE EXPANSION AND CONTRACTION JOINTS IN THE BARRIER SHOWN ON THE PLANS MAY BE ADJUSTED TO ACCOMMODATE THE PANEL TYPE USED IN THE PROJECT. ANY CHANGE TO THESE JOINT LOCATIONS SHALL BE SUBMITTED TO THE ENGINEER FOR APPROVAL. EXPANSION JOINTS ARE LABELED "EJ".

LEVELING PAD: THE PROPRIETARY WALL MANUFACTURER MAY RELOCATE THE LEVELING PAD STEPS AT THEIR DISCRETION PROVIDED THAT THE MINIMUM EMBEDMENT IS MAINTAINED. ANY CHANGE TO THE STEP LOCATIONS SHALL BE SUBMITTED TO THE ENGINEER FOR APPROVAL.

ROADWAY LIMITS: THE PROPRIETARY WALL MANUFACTURER SHALL ASSURE THAT PROPOSED PROPRIETARY WALL COMPONENTS ARE POSITIONED SUCH THAT THE DESIGNATED ROADWAY LIMITS ARE NOT ENCROACHED UPON.

TRAFFIC BARRIER JOINTS: TRAFFIC BARRIER SHALL HAVE CONSTRUCTION JOINTS.

COORDINATION: CONTRACTOR AND PROPRIETARY WALL MANUFACTURER SHALL COORDINATE LOCATIONS OF INLETS AND PIPES WITH LOCATIONS OF PROPRIETARY WALL TIEBACK SYSTEM.

ARCHITECTURAL FINISH: THE MSE WALL PANELS SHALL RECEIVE AN ARCHITECTURAL FINISH.

SERVICE LIFE: ALL RETAINING WALL COMPONENTS SHALL BE DESIGNED FOR A MINIMUM SERVICE LIFE OF ~~75~~ 100 YEARS. (2)

WALL SYSTEM: ONLY ONE MSE WALL SYSTEM MAY BE USED ON THIS PROJECT.

ROADWAY SUPERELEVATION: FOR ROADWAY SUPERELEVATION, SEE SUPERELEVATION TABLES.

MSE WALL BACKFILL: MSE WALL BACKFILL SHALL CONSIST OF SPECIFIED BACKFILL.

PAY ITEMS: PCC MASONRY, PARAPET, CLASS A (602017)
BAR REINFORCEMENT, EPOXY COATED (604000)
MECHANICALLY STABILIZED EARTH WALLS (602772)

SOIL PROPERTIES FOR DESIGN

SOIL TYPE	UNIT WEIGHT (PCF)	ANGLE OF FRICTION (DEGREES)
SELECT FILL	125	34
COMMON BORROW	130	28
FOUNDATION SOIL	68	32

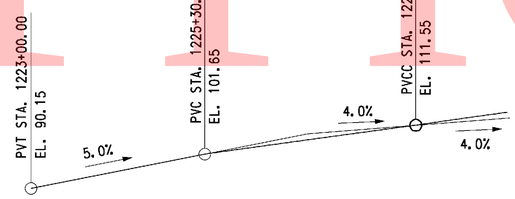

RAMP A
VERTICAL CURVE DATA
NO SCALE

CURVE NO. 12

P. I. STA.	1226+68.24
Δ	27°44'07.64" LT
DC	03°05'49.45"
R	1850.00'
TANGENT	456.72'
LENGTH	895.54'

RAMP A
HORIZONTAL CURVE DATA
NO SCALE

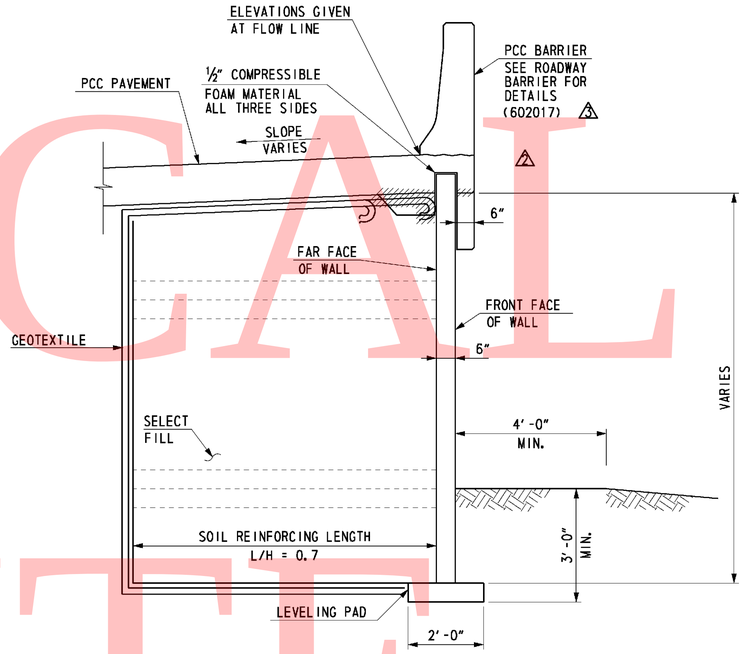

TYPICAL SECTION
(LOOKING AHEAD STATIONS)
SCALE: ½" = 1'-0"

FOUNDATION NOTES

THE FACTORED BEARING RESISTANCE SHALL BE VERIFIED PRIOR TO CONSTRUCTION OF THE MSE WALL.

THE INTERNAL STABILITY OF THE MSE WALL SHALL BE DESIGNED BY THE CONTRACTOR USING THE SOIL PARAMETERS PROVIDED FOR EACH STRUCTURE LOCATION. THE INTERNAL STABILITY SHOULD BE SIGNED AND SEALED BY A PROFESSIONAL ENGINEER LICENSED IN THE STATE OF DELAWARE AS INDICATED IN THE PROJECT SPECIFICATIONS. THE FACTORED APPLIED BEARING STRESS SHALL NOT EXCEED THE FACTORED BEARING RESISTANCE.

ISOLATED AREAS OF UNDERCUTTING OF EXISTING FILL MAY BE ENCOUNTERED DURING CONSTRUCTION OF THIS RETAINING WALL.

IT IS THE CONTRACTOR'S RESPONSIBILITY TO PROVIDE A RELATIVELY DRY EXCAVATION, INCLUDING DETERMINING APPROPRIATE DEWATERING METHODS DURING CONSTRUCTION IF NECESSARY.

(2) A QUARANTINE PERIOD OF ~~APPROXIMATELY~~ 30-DAYS IS REQUIRED AFTER CONSTRUCTION OF THE FULL HEIGHT OF THE MSE WALL IS ACHIEVED. THE ENGINEER SHALL APPROVE THE COMPLETION OF THE QUARANTINE PERIOD PRIOR TO CONSTRUCTION OF ANY PARAPETS.

THE DESIGN UNIT WEIGHT INDICATED IN SOIL PROPERTIES TABLE HAS BEEN ADJUSTED DUE TO THE PRESENCE OF SHALLOW GROUNDWATER.

THE WALL SUPPLIER SHAL PERFORM A DETAILED SEISMIC ANALYSIS FOR BACK TO BACK MSE WALLS WITH L/H LESS THAN 1.1, IF NECESSARY, AS REQUIRED BY FHWA PUBLICATION NO. FHWA-NHI-00-043.

0 1 4
½ 2
SCALE: ½"=1'-0"

UNOFFICIAL WEBSITE COPY

2/14/2011 11:44:28 AM
M:\PROJECTS\2003\03059_DELTRNPK\SR1MALL\CADD\2809003\PLANS\RD23_WALL-12_SR1.DGN

DELAWARE
DEPARTMENT OF TRANSPORTATION

ADDENDUMS / REVISIONS	
ADDENDUM NO. (2), UPDATED FOUNDATION NOTES, SECTION, 01/26/11, JSW	
ADDENDUM NO. (3), UPDATED GENERAL NOTES AND TYPICAL SECTION, 02/18/11, JSW	

SR1 / I-95 INTERCHANGE

CONTRACT	28-090-03
COUNTY	NEW CASTLE
BRIDGE NO.	
DESIGNED BY:	JMS
CHECKED BY:	JSW

RETAINING WALL 12
GENERAL NOTES AND TYPICAL SECTION

R12-01
SHEET NO. 590
TOTAL SHTS. 803

GENERAL NOTES

SPECIFICATIONS: PROPRIETARY MSE WALLS SHALL BE DESIGNED IN ACCORDANCE WITH THE FOLLOWING:
- AASHTO LRFD BRIDGE DESIGN SPECIFICATIONS, 4TH EDITION WITH ALL CURRENT REVISIONS.
- FEDERAL HIGHWAY ADMINISTRATION PUBLICATION NO. FHWA-NHI-00-043, "MECHANICALLY STABILIZED EARTH WALLS AND REINFORCED SOIL SLOPES DESIGN AND CONSTRUCTION GUIDELINES"

CONCRETE DESIGN SHALL BE PERFORMED USING THE LOAD AND RESISTANCE FACTOR DESIGN METHOD.

CONCRETE: ALL CONCRETE FOR PARAPETS, AND ROADWAY BARRIERS SHALL BE 4500 PSI. LEVELING PAD CONCRETE SHALL BE 3500 PSI. MIX REQUIREMENTS SHALL CONFORM TO SECTION 812 OF THE DELAWARE DEPARTMENT OF TRANSPORTATION STANDARD SPECIFICATIONS.

CHAMFERS: ALL EXPOSED CORNERS OF CONCRETE SHALL BE CHAMFERED WITH ¾" x ¾" MILLED CHAMFER STRIPS, UNLESS OTHERWISE NOTED EXCEPT ON UNEXPOSED FOOTINGS OR WHERE INDICATED BY THE FOLLOWING NOTATION ON THE PLANS: "DO NOT CHAMFER".

REINFORCING STEEL: REINFORCING STEEL SHALL CONFORM TO ASTM A 615, GRADE 60. MINIMUM COVER FOR ANY BAR SHALL BE 2" UNLESS OTHERWISE NOTED.

FOR TIES AND STIRRUPS, STANDARD ACI BENDING TOLERANCES ARE MODIFIED TO PLUS (+) ZERO INCHES, MINUS (-) NORMAL ACI BENDING TOLERANCE.

ONLY GRADE 60 CAN BE USED ON THIS PROJECT.

ALL REINFORCING STEEL IN THE PARAPET SHALL BE EPOXY COATED.

ALL KEYS ARE NOMINAL SIZE.

THE MSE WALL MANUFACTURER MAY SUBSTITUTE ALTERNATE REINFORCING CONFIGURATIONS AND SUBMIT FOR APPROVAL.

EXPANSION AND CONTRACTION JOINTS: THE LOCATION OF THE EXPANSION AND CONTRACTION JOINTS IN THE BARRIER SHOWN ON THE PLANS MAY BE ADJUSTED TO ACCOMMODATE THE PANEL TYPE USED IN THE PROJECT. ANY CHANGE TO THESE JOINT LOCATIONS SHALL BE SUBMITTED TO THE ENGINEER FOR APPROVAL. EXPANSION JOINTS ARE LABELED "EJ".

LEVELING PAD: THE PROPRIETARY WALL MANUFACTURER MAY RELOCATE THE LEVELING PAD STEPS AT THEIR DISCRETION PROVIDED THAT THE MINIMUM EMBEDMENT IS MAINTAINED. ANY CHANGE TO THE STEP LOCATIONS SHALL BE SUBMITTED TO THE ENGINEER FOR APPROVAL.

ROADWAY LIMITS: THE PROPRIETARY WALL MANUFACTURER SHALL ASSURE THAT PROPOSED PROPRIETARY WALL COMPONENTS ARE POSITIONED SUCH THAT THE DESIGNATED ROADWAY LIMITS ARE NOT ENCROACHED UPON.

TRAFFIC BARRIER JOINTS: TRAFFIC BARRIER SHALL HAVE CONSTRUCTION JOINTS.

COORDINATION: CONTRACTOR AND PROPRIETARY WALL MANUFACTURER SHALL COORDINATE LOCATIONS OF INLETS AND PIPES WITH LOCATIONS OF PROPRIETARY WALL TIEBACK SYSTEM.

ARCHITECTURAL FINISH: THE MSE WALL PANELS SHALL RECEIVE AN ARCHITECTURAL FINISH.

SERVICE LIFE: ALL RETAINING WALL COMPONENTS SHALL BE DESIGNED FOR A MINIMUM SERVICE LIFE OF ~~75~~ 100 YEARS. (3)

WALL SYSTEM: ONLY ONE MSE WALL SYSTEM MAY BE USED ON THIS PROJECT.

ROADWAY SUPERELEVATION: FOR ROADWAY SUPERELEVATION, SEE SUPERELEVATION TABLES.

MSE WALL BACKFILL: MSE WALL BACKFILL SHALL CONSIST OF SPECIFIED BACKFILL.

PAY ITEMS: PCC MASONRY, PARAPET, CLASS A (602017)
BAR REINFORCEMENT, EPOXY COATED (604000)
MECHANICALLY STABILIZED EARTH WALLS (602772)

SOIL PROPERTIES FOR DESIGN

SOIL TYPE	UNIT WEIGHT (PCF)	ANGLE OF FRICTION (DEGREES)
SELECT FILL	125	34
COMMON BORROW	130	28
FOUNDATION SOIL	68	32

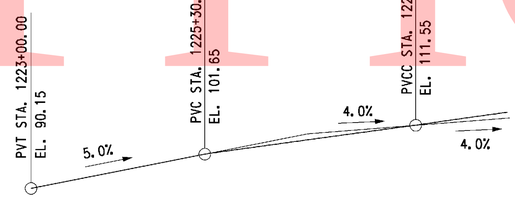

RAMP A
VERTICAL CURVE DATA
NO SCALE

CURVE NO. 12

P. I. STA.	1226+68.24
△	27°44'07.64" LT
DC	03°05'49.45"
R	1850.00'
TANGENT	456.72'
LENGTH	895.54'

RAMP A
HORIZONTAL CURVE DATA
NO SCALE

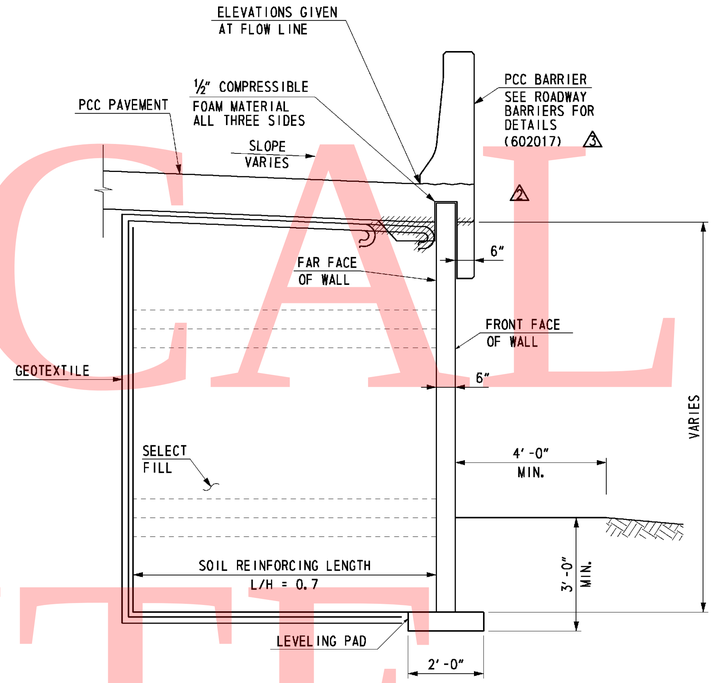

TYPICAL SECTION
(LOOKING BACK STATIONS)
SCALE: ½" = 1'-0"

FOUNDATION NOTES

THE FACTORED BEARING RESISTANCE SHALL BE VERIFIED PRIOR TO CONSTRUCTION OF THE MSE WALL.

THE INTERNAL STABILITY OF THE MSE WALL SHALL BE DESIGNED BY THE CONTRACTOR USING THE SOIL PARAMETERS PROVIDED FOR EACH STRUCTURE LOCATION. THE INTERNAL STABILITY SHOULD BE SIGNED AND SEALED BY A PROFESSIONAL ENGINEER LICENSED IN THE STATE OF DELAWARE AS INDICATED IN THE PROJECT SPECIFICATIONS. THE FACTORED APPLIED BEARING STRESS SHALL NOT EXCEED THE FACTORED BEARING RESISTANCE.

ISOLATED AREAS OF UNDERCUTTING OF EXISTING FILL MAY BE ENCOUNTERED DURING CONSTRUCTION OF THIS RETAINING WALL.

IT IS THE CONTRACTOR'S RESPONSIBILITY TO PROVIDE A RELATIVELY DRY EXCAVATION, INCLUDING DETERMINING APPROPRIATE DEWATERING METHODS DURING CONSTRUCTION IF NECESSARY.

(2) A QUARANTINE PERIOD OF ~~APPROXIMATELY~~ 30-DAYS IS REQUIRED AFTER CONSTRUCTION OF THE FULL HEIGHT OF THE MSE WALL IS ACHIEVED. THE ENGINEER SHALL APPROVE THE COMPLETION OF THE QUARANTINE PERIOD PRIOR TO CONSTRUCTION OF ANY PARAPETS.

THE DESIGN UNIT WEIGHT INDICATED IN SOIL PROPERTIES TABLE HAS BEEN ADJUSTED DUE TO THE PRESENCE OF SHALLOW GROUNDWATER.

THE WALL SUPPLIER SHAL PERFORM A DETAILED SEISMIC ANALYSIS FOR BACK TO BACK MSE WALLS WITH L/H LESS THAN 1.1, IF NECESSARY, AS REQUIRED BY FHWA PUBLICATION NO. FHWA-NHI-00-043.

0 1 4
½ 2
SCALE: ½"=1'-0"

UNOFFICIAL WEBSITE COPY

2/14/2011 9:21:47 AM
M:\PROJECTS\2003\03059_DELTRNPK\SRTMALL\CADD\2809003\PLANS\RD26_WALL-13_SR1.DGN

DELAWARE DEPARTMENT OF TRANSPORTATION

ADDENDUMS / REVISIONS	
ADDENDUM NO. (2), UPDATED FOUNDATION NOTES, SECTION, 01/26/11, JSW	
ADDENDUM NO. (3), UPDATED GENERAL NOTES AND TYPICAL SECTION, 02/18/11, JSW	

SR1 / I-95 INTERCHANGE

CONTRACT	BRIDGE NO.	
28-090-03	DESIGNED BY:	JMS
COUNTY	CHECKED BY:	JSW
NEW CASTLE		

RETAINING WALL 13
GENERAL NOTES AND TYPICAL SECTION

R13-01

SHEET NO.	TOTAL SHTS.
596	803

GENERAL NOTES

SPECIFICATIONS: PROPRIETARY MSE WALLS SHALL BE DESIGNED IN ACCORDANCE WITH THE FOLLOWING:
- AASHTO LRFD BRIDGE DESIGN SPECIFICATIONS, 4TH EDITION WITH ALL CURRENT REVISIONS.
- FEDERAL HIGHWAY ADMINISTRATION PUBLICATION NO. FHWA-NHI-00-043, "MECHANICALLY STABILIZED EARTH WALLS AND REINFORCED SOIL SLOPES DESIGN AND CONSTRUCTION GUIDELINES"

CONCRETE DESIGN SHALL BE PERFORMED USING THE LOAD AND RESISTANCE FACTOR DESIGN METHOD.

CONCRETE: ALL CONCRETE FOR PARAPETS AND ROADWAY BARRIERS SHALL BE 4500 PSI. LEVELING PAD CONCRETE SHALL BE 3500 PSI. MIX REQUIREMENTS SHALL CONFORM TO SECTION 812 OF THE DELAWARE DEPARTMENT OF TRANSPORTATION STANDARD SPECIFICATIONS.

CHAMFERS: ALL EXPOSED CORNERS OF CONCRETE SHALL BE CHAMFERED WITH ¾" x ¾" MILLED CHAMFER STRIPS, UNLESS OTHERWISE NOTED EXCEPT ON UNEXPOSED FOOTINGS OR WHERE INDICATED BY THE FOLLOWING NOTATION ON THE PLANS: "DO NOT CHAMFER".

REINFORCING STEEL: REINFORCING STEEL SHALL CONFORM TO ASTM A 615, GRADE 60. MINIMUM COVER FOR ANY BAR SHALL BE 2" UNLESS OTHERWISE NOTED.

FOR TIES AND STIRRUPS, STANDARD ACI BENDING TOLERANCES ARE MODIFIED TO PLUS (+) ZERO INCHES, MINUS (-) NORMAL ACI BENDING TOLERANCE.

ONLY GRADE 60 CAN BE USED ON THIS PROJECT.

ALL REINFORCING STEEL IN THE PARAPET SHALL BE EPOXY COATED.

ALL KEYS ARE NOMINAL SIZE.

THE MSE WALL MANUFACTURER MAY SUBSTITUTE ALTERNATE REINFORCING CONFIGURATIONS AND SUBMIT FOR APPROVAL.

EXPANSION AND CONTRACTION JOINTS: THE LOCATION OF THE EXPANSION AND CONTRACTION JOINTS IN THE BARRIER SHOWN ON THE PLANS MAY BE ADJUSTED TO ACCOMMODATE THE PANEL TYPE USED IN THE PROJECT. ANY CHANGE TO THESE JOINT LOCATIONS SHALL BE SUBMITTED TO THE ENGINEER FOR APPROVAL. EXPANSION JOINTS ARE LABELED "EJ".

LEVELING PAD: THE PROPRIETARY WALL MANUFACTURER MAY RELOCATE THE LEVELING PAD STEPS AT THEIR DISCRETION PROVIDED THAT THE MINIMUM EMBEDMENT IS MAINTAINED. ANY CHANGE TO THE STEP LOCATIONS SHALL BE SUBMITTED TO THE ENGINEER FOR APPROVAL.

ROADWAY LIMITS: THE PROPRIETARY WALL MANUFACTURER SHALL ASSURE THAT PROPOSED PROPRIETARY WALL COMPONENTS ARE POSITIONED SUCH THAT THE DESIGNATED ROADWAY LIMITS ARE NOT ENCROACHED UPON.

TRAFFIC BARRIER JOINTS: TRAFFIC BARRIER SHALL HAVE CONSTRUCTION JOINTS.

COORDINATION: CONTRACTOR AND PROPRIETARY WALL MANUFACTURER SHALL COORDINATE LOCATIONS OF INLETS AND PIPES WITH LOCATIONS OF PROPRIETARY WALL TIEBACK SYSTEM.

ARCHITECTURAL FINISH: THE MSE WALL PANELS SHALL RECEIVE AN ARCHITECTURAL FINISH.

SERVICE LIFE: ALL RETAINING WALL COMPONENTS SHALL BE DESIGNED FOR A MINIMUM SERVICE LIFE OF ~~75~~ 100 YEARS. (2)

WALL SYSTEM: ONLY ONE MSE WALL SYSTEM MAY BE USED ON THIS PROJECT.

ROADWAY SUPERELEVATION: FOR ROADWAY SUPERELEVATION, SEE SUPERELEVATION TABLES.

MSE WALL BACKFILL: MSE WALL BACKFILL SHALL CONSIST OF SPECIFIED BACKFILL.

PAY ITEMS: PCC MASONRY, PARAPET, CLASS A (602017)
BAR REINFORCEMENT, EPOXY COATED (604000)
MECHANICALLY STABILIZED EARTH WALLS (602772)

SOIL PROPERTIES FOR DESIGN

SOIL TYPE	UNIT WEIGHT (PCF)	ANGLE OF FRICTION (DEGREES)
SELECT FILL	125	34
FOUNDATION SOIL	68	24

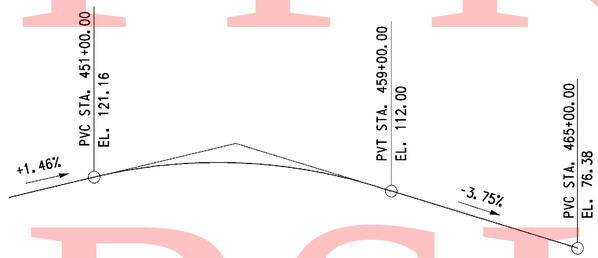

RAMP B VERTICAL CURVE DATA

NO SCALE

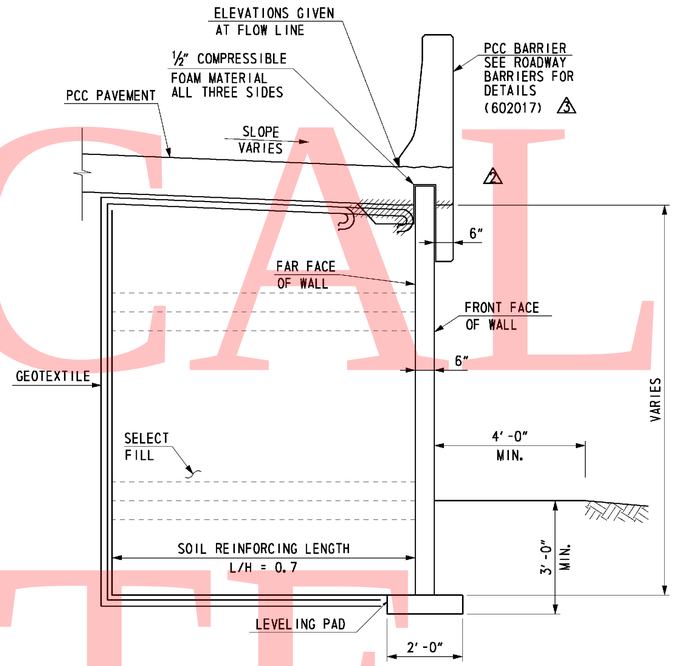

TYPICAL SECTION

(LOOKING AHEAD STATIONS)
SCALE: ½" = 1'-0"

FOUNDATION NOTES

THE FACTORED BEARING RESISTANCE SHALL BE VERIFIED PRIOR TO CONSTRUCTION OF THE MSE WALL.

THE INTERNAL STABILITY OF THE MSE WALL SHALL BE DESIGNED BY THE CONTRACTOR USING THE SOIL PARAMETERS PROVIDED FOR EACH STRUCTURE LOCATION. THE INTERNAL STABILITY SHOULD BE SIGNED AND SEALED BY A PROFESSIONAL ENGINEER LICENSED IN THE STATE OF DELAWARE AS INDICATED IN THE PROJECT SPECIFICATIONS. THE FACTORED APPLIED BEARING STRESS SHALL NOT EXCEED THE FACTORED BEARING RESISTANCE.

GROUNDWATER MAY BE ENCOUNTERED DURING EXCAVATION TO THE LEVELING PAD AND DURING CONSTRUCTION OF THIS RETAINING WALL. IT IS THE CONTRACTOR'S RESPONSIBILITY TO PROVIDE A RELATIVELY DRY EXCAVATION, INCLUDING DETERMINING APPROPRIATE DEWATERING METHODS DURING CONSTRUCTION.

(2) A QUARANTINE PERIOD OF ~~APPROXIMATELY~~ 30-DAYS IS REQUIRED AFTER CONSTRUCTION OF THE FULL HEIGHT OF THE MSE WALL IS ACHIEVED. THE ENGINEER SHALL APPROVE THE COMPLETION OF THE QUARANTINE PERIOD PRIOR TO CONSTRUCTION OF ANY PARAPETS.

THE DESIGN UNIT WEIGHT INDICATED IN SOIL PROPERTIES TABLE HAS BEEN ADJUSTED DUE TO THE PRESENCE OF SHALLOW GROUNDWATER.

THE WALL SUPPLIER SHAL PERFORM A DETAILED SEISMIC ANALYSIS FOR BACK TO BACK MSE WALLS WITH L/H LESS THAN 1.1, IF NECESSARY, AS REQUIRED BY FHWA PUBLICATION NO. FHWA-NHI-00-043.

0 1 4
½ 2
SCALE: ½"=1'-0"

UNOFFICIAL WEBSITE COPY

2/14/2011 9:26:19 AM
M:\PROJECTS\2003\03059_DELTRNPK\SRTMALL\CADD\2809003\PLANS\RD29_WALL-14_SR1DGN

DELAWARE DEPARTMENT OF TRANSPORTATION

ADDENDUMS / REVISIONS	
ADDENDUM NO. (2), UPDATED FOUNDATION NOTES, SECTION, 01/26/11, JSW	
ADDENDUM NO. (2), UPDATED GENERAL NOTES AND TYPICAL SECTION, 02/18/11, JSW	

SR1 / I-95 INTERCHANGE

CONTRACT	BRIDGE NO.	
28-090-03	DESIGNED BY:	JMS
COUNTY	CHECKED BY:	JSW
NEW CASTLE		

RETAINING WALL 14
GENERAL NOTES AND TYPICAL SECTION

R14-01

SHEET NO.	TOTAL SHTS.
602	803

GENERAL NOTES

SPECIFICATIONS: PROPRIETARY MSE WALLS SHALL BE DESIGNED IN ACCORDANCE WITH THE FOLLOWING:
- AASHTO LRFD BRIDGE DESIGN SPECIFICATIONS, 4TH EDITION WITH ALL CURRENT REVISIONS.
- FEDERAL HIGHWAY ADMINISTRATION PUBLICATION NO. FHWA-NHI-00-043, "MECHANICALLY STABILIZED EARTH WALLS AND REINFORCED SOIL SLOPES DESIGN AND CONSTRUCTION GUIDELINES"

CONCRETE DESIGN SHALL BE PERFORMED USING THE LOAD AND RESISTANCE FACTOR DESIGN METHOD.

CONCRETE: ALL CONCRETE FOR PARAPETS, AND ROADWAY BARRIERS SHALL BE 4500 PSI. LEVELING PAD CONCRETE SHALL BE 3500 PSI. MIX REQUIREMENTS SHALL CONFORM TO SECTION 812 OF THE DELAWARE DEPARTMENT OF TRANSPORTATION STANDARD SPECIFICATIONS.

CHAMFERS: ALL EXPOSED CORNERS OF CONCRETE SHALL BE CHAMFERED WITH ¾" x ¾" MILLED CHAMFER STRIPS, UNLESS OTHERWISE NOTED EXCEPT ON UNEXPOSED FOOTINGS OR WHERE INDICATED BY THE FOLLOWING NOTATION ON THE PLANS: "DO NOT CHAMFER".

REINFORCING STEEL: REINFORCING STEEL SHALL CONFORM TO ASTM A 615, GRADE 60. MINIMUM COVER FOR ANY BAR SHALL BE 2" UNLESS OTHERWISE NOTED.

FOR TIES AND STIRRUPS, STANDARD ACI BENDING TOLERANCES ARE MODIFIED TO PLUS (+) ZERO INCHES, MINUS (-) NORMAL ACI BENDING TOLERANCE.

ONLY GRADE 60 CAN BE USED ON THIS PROJECT.

ALL REINFORCING STEEL IN THE PARAPET SHALL BE EPOXY COATED.

ALL KEYS ARE NOMINAL SIZE.

THE MSE WALL MANUFACTURER MAY SUBSTITUTE ALTERNATE REINFORCING CONFIGURATIONS AND SUBMIT FOR APPROVAL.

EXPANSION AND CONTRACTION JOINTS: THE LOCATION OF THE EXPANSION AND CONTRACTION JOINTS IN THE BARRIER SHOWN ON THE PLANS MAY BE ADJUSTED TO ACCOMMODATE THE PANEL TYPE USED IN THE PROJECT. ANY CHANGE TO THESE JOINT LOCATIONS SHALL BE SUBMITTED TO THE ENGINEER FOR APPROVAL. EXPANSION JOINTS ARE LABELED "EJ".

LEVELING PAD: THE PROPRIETARY WALL MANUFACTURER MAY RELOCATE THE LEVELING PAD STEPS AT THEIR DISCRETION PROVIDED THAT THE MINIMUM EMBEDMENT IS MAINTAINED. ANY CHANGE TO THE STEP LOCATIONS SHALL BE SUBMITTED TO THE ENGINEER FOR APPROVAL.

ROADWAY LIMITS: THE PROPRIETARY WALL MANUFACTURER SHALL ASSURE THAT PROPOSED PROPRIETARY WALL COMPONENTS ARE POSITIONED SUCH THAT THE DESIGNATED ROADWAY LIMITS ARE NOT ENCROACHED UPON.

TRAFFIC BARRIER JOINTS: TRAFFIC BARRIER SHALL HAVE CONSTRUCTION JOINTS.

COORDINATION: CONTRACTOR AND PROPRIETARY WALL MANUFACTURER SHALL COORDINATE LOCATIONS OF INLETS AND PIPES WITH LOCATIONS OF PROPRIETARY WALL TIEBACK SYSTEM.

ARCHITECTURAL FINISH: THE MSE WALL PANELS SHALL RECEIVE AN ARCHITECTURAL FINISH.

SERVICE LIFE: ALL RETAINING WALL COMPONENTS SHALL BE DESIGNED FOR A MINIMUM SERVICE LIFE OF ~~75~~ 100 YEARS. (3)

WALL SYSTEM: ONLY ONE MSE WALL SYSTEM MAY BE USED ON THIS PROJECT.

ROADWAY SUPERELEVATION: FOR ROADWAY SUPERELEVATION, SEE SUPERELEVATION TABLES.

MSE WALL BACKFILL: MSE WALL BACKFILL SHALL CONSIST OF SPECIFIED BACKFILL.

PAY ITEMS: PCC MASONRY, PARAPET, CLASS A (602017)
BAR REINFORCEMENT, EPOXY COATED (604000)
MECHANICALLY STABILIZED EARTH WALLS (602772)

SOIL PROPERTIES FOR DESIGN

SOIL TYPE	UNIT WEIGHT (PCF)	ANGLE OF FRICTION (DEGREES)
SELECT FILL	125	34
FOUNDATION SOIL	68	24

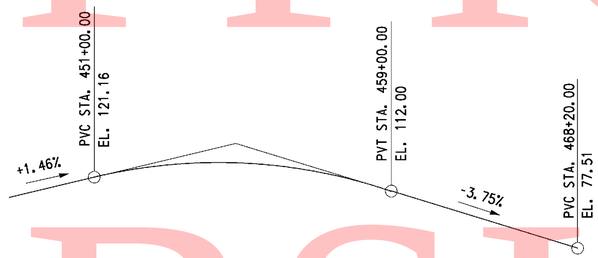

RAMP B
VERTICAL CURVE DATA
NO SCALE

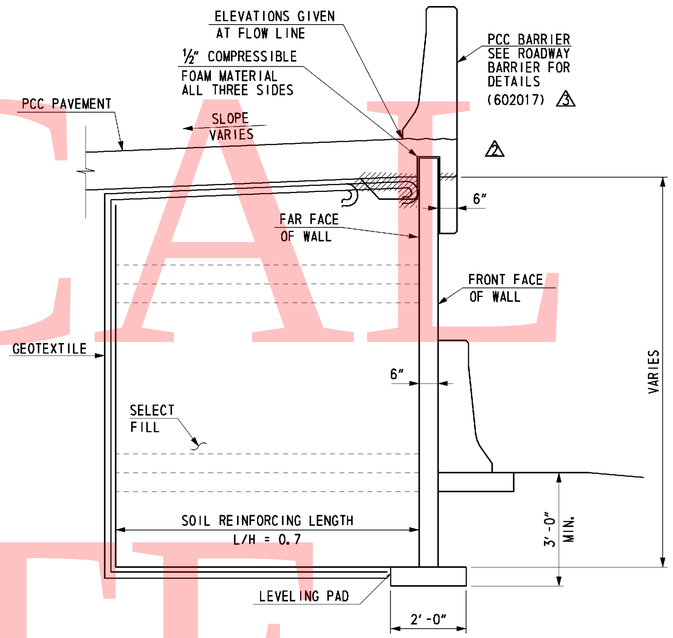

TYPICAL SECTION
(LOOKING BACK STATION)
SCALE: ½" = 1'-0"

FOUNDATION NOTES

THE FACTORED BEARING RESISTANCE SHALL BE VERIFIED PRIOR TO CONSTRUCTION OF THE MSE WALL.

THE INTERNAL STABILITY OF THE MSE WALL SHALL BE DESIGNED BY THE CONTRACTOR USING THE SOIL PARAMETERS PROVIDED FOR EACH STRUCTURE LOCATION. THE INTERNAL STABILITY SHOULD BE SIGNED AND SEALED BY A PROFESSIONAL ENGINEER LICENSED IN THE STATE OF DELAWARE AS INDICATED IN THE PROJECT SPECIFICATIONS. THE FACTORED APPLIED BEARING STRESS SHALL NOT EXCEED THE FACTORED BEARING RESISTANCE.

GROUNDWATER MAY BE ENCOUNTERED DURING EXCAVATION TO THE LEVELING PAD AND DURING CONSTRUCTION OF THIS RETAINING WALL. IT IS THE CONTRACTOR'S RESPONSIBILITY TO PROVIDE A RELATIVELY DRY EXCAVATION, INCLUDING DETERMINING APPROPRIATE DEWATERING METHODS DURING CONSTRUCTION.

(2) A QUARANTINE PERIOD OF ~~APPROXIMATELY~~ 30-DAYS IS REQUIRED AFTER CONSTRUCTION OF THE FULL HEIGHT OF THE MSE WALL IS ACHIEVED. THE ENGINEER SHALL APPROVE THE COMPLETION OF THE QUARANTINE PERIOD PRIOR TO CONSTRUCTION OF ANY PARAPETS.

THE DESIGN UNIT WEIGHT INDICATED IN SOIL PROPERTIES TABLE HAS BEEN ADJUSTED DUE TO THE PRESENCE OF SHALLOW GROUNDWATER.

THE WALL SUPPLIER SHAL PERFORM A DETAILED SEISMIC ANALYSIS FOR BACK TO BACK MSE WALLS WITH L/H LESS THAN 1.1, IF NECESSARY, AS REQUIRED BY FHWA PUBLICATION NO. FHWA-NHI-00-043.

0 1 4
½ 2
SCALE: ½" = 1'-0"

UNOFFICIAL WEBSITE COPY

2/14/2011 11:50:47 AM
M:\PROJECTS\2003\03059_DELTRNPK\SRTMALL\CADD\2809003\PLANS\RD33_WALL-15_SR1.DGN

DELAWARE DEPARTMENT OF TRANSPORTATION

ADDENDUMS / REVISIONS	
ADDENDUM NO. (2), UPDATED FOUNDATION NOTES, SECTION, 01/26/11, JSW	
ADDENDUM NO. (3), UPDATED GENERAL NOTES AND TYPICAL SECTION, 02/18/11, JSW	

SR1 / I-95 INTERCHANGE

CONTRACT	BRIDGE NO.	
28-090-03	DESIGNED BY:	JMS
COUNTY	CHECKED BY:	JSW
NEW CASTLE		

RETAINING WALL 15
GENERAL NOTES AND TYPICAL SECTION

R15-01

SHEET NO.	TOTAL SHTS.
610	803

GENERAL NOTES

SPECIFICATIONS: PROPRIETARY MSE WALLS SHALL BE DESIGNED IN ACCORDANCE WITH THE FOLLOWING:
- AASHTO LRFD BRIDGE DESIGN SPECIFICATIONS, 4TH EDITION WITH ALL CURRENT REVISIONS.
- FEDERAL HIGHWAY ADMINISTRATION PUBLICATION NO. FHWA-NHI-00-043, "MECHANICALLY STABILIZED EARTH WALLS AND REINFORCED SOIL SLOPES DESIGN AND CONSTRUCTION GUIDELINES"

CONCRETE: CONCRETE DESIGN SHALL BE PERFORMED USING THE LOAD AND RESISTANCE FACTOR DESIGN METHOD.

COPING CONCRETE SHALL BE 3500 PSI. MIX REQUIREMENTS SHALL CONFORM TO SECTION 812 OF THE DELAWARE DEPARTMENT OF TRANSPORTATION STANDARD SPECIFICATIONS.

CHAMFERS: ALL EXPOSED CORNERS OF CONCRETE SHALL BE CHAMFERED WITH ¾" x ¾" MILLED CHAMFER STRIPS, UNLESS OTHERWISE NOTED EXCEPT ON UNEXPOSED FOOTINGS OR WHERE INDICATED BY THE FOLLOWING NOTATION ON THE PLANS: "DO NOT CHAMFER".

REINFORCING STEEL: REINFORCING STEEL SHALL CONFORM TO ASTM A 615, GRADE 60. MINIMUM COVER FOR ANY BAR SHALL BE 2" UNLESS OTHERWISE NOTED.

FOR TIES AND STIRRUPS, STANDARD ACI BENDING TOLERANCES ARE MODIFIED TO PLUS (+) ZERO INCHES, MINUS (-) NORMAL ACI BENDING TOLERANCE.

ONLY GRADE 60 CAN BE USED ON THIS PROJECT.

ALL REINFORCING STEEL IN THE COPING SHALL BE EPOXY COATED.

ALL KEYS ARE NOMINAL SIZE.

THE MSE WALL MANUFACTURER MAY SUBSTITUTE ALTERNATE REINFORCING CONFIGURATIONS AND SUBMIT FOR APPROVAL.

EXPANSION AND CONTRACTION JOINTS: THE LOCATION OF THE EXPANSION AND CONTRACTION JOINTS IN THE COPING SHOWN ON THE PLANS MAY BE ADJUSTED TO ACCOMMODATE THE PANEL TYPE USED IN THE PROJECT. ANY CHANGE TO THESE JOINT LOCATIONS SHALL BE SUBMITTED TO THE ENGINEER FOR APPROVAL. EXPANSION JOINTS ARE LABELED "EJ".

LEVELING PAD: THE PROPRIETARY WALL MANUFACTURER MAY RELOCATE THE LEVELING PAD STEPS AT THEIR DISCRETION PROVIDED THAT THE MINIMUM EMBEDMENT IS MAINTAINED. ANY CHANGE TO THE STEP LOCATIONS SHALL BE SUBMITTED TO THE ENGINEER FOR APPROVAL.

ROADWAY LIMITS: THE PROPRIETARY WALL MANUFACTURER SHALL ASSURE THAT PROPOSED PROPRIETARY WALL COMPONENTS ARE POSITIONED SUCH THAT THE DESIGNATED ROADWAY LIMITS ARE NOT ENCROACHED UPON.

COPING JOINTS: COPING SHALL HAVE CONSTRUCTION JOINTS.

COORDINATION: CONTRACTOR AND PROPRIETARY WALL MANUFACTURER SHALL COORDINATE LOCATIONS OF INLETS AND PIPES WITH LOCATIONS OF PROPRIETARY WALL TIEBACK SYSTEM.

ARCHITECTURAL FINISH: THE MSE WALL PANELS SHALL RECEIVE AN ARCHITECTURAL FINISH.

SERVICE LIFE: ALL RETAINING WALL COMPONENTS SHALL BE DESIGNED FOR A MINIMUM SERVICE LIFE OF ~~75~~ 100 YEARS. (3)

WALL SYSTEM: ONLY ONE MSE WALL SYSTEM MAY BE USED ON THIS PROJECT.

ROADWAY SUPERELEVATION: FOR ROADWAY SUPERELEVATION, SEE SUPERELEVATION TABLES.

MSE WALL BACKFILL: MSE WALL BACKFILL SHALL CONSIST OF SPECIFIED BACKFILL.

PAY ITEMS: MECHANICALLY STABILIZED EARTH WALLS (602772)
PCC MASONRY FOR MSE WALLS (602773)
BAR REINFORCEMENT, EPOXY COATED (604000)

FOUNDATION NOTES

THE FACTORED BEARING RESISTANCE SHALL BE VERIFIED PRIOR TO CONSTRUCTION OF THE MSE WALL.

THE INTERNAL STABILITY OF THE MSE WALL SHALL BE DESIGNED BY THE CONTRACTOR USING THE SOIL PARAMETERS PROVIDED FOR EACH STRUCTURE LOCATION. THE INTERNAL STABILITY SHOULD BE SIGNED AND SEALED BY A PROFESSIONAL ENGINEER LICENSED IN THE STATE OF DELAWARE AS INDICATED IN THE PROJECT SPECIFICATIONS. THE FACTORED APPLIED BEARING STRESS SHALL NOT EXCEED THE FACTORED BEARING RESISTANCE.

ISOLATED AREAS OF UNDERCUTTING OF EXISTING FILL MAY BE ENCOUNTERED DURING CONSTRUCTION OF THIS RETAINING WALL.

GROUNDWATER MAY BE ENCOUNTERED DURING EXCAVATION TO THE LEVELING PAD AND DURING CONSTRUCTION OF THIS RETAINING WALL. IT IS THE CONTRACTOR'S RESPONSIBILITY TO PROVIDE A RELATIVELY DRY EXCAVATION, INCLUDING DETERMINING APPROPRIATE DEWATERING METHODS DURING CONSTRUCTION.

(2) A QUARANTINE PERIOD OF ~~APPROXIMATELY~~ 30-DAYS IS REQUIRED AFTER CONSTRUCTION OF THE FULL HEIGHT OF THE MSE WALL IS ACHIEVED. THE ENGINEER SHALL APPROVE THE COMPLETION OF THE QUARANTINE PERIOD PRIOR TO CONSTRUCTION OF ANY COPING.

THE DESIGN UNIT WEIGHT INDICATED IN SOIL PROPERTIES TABLE HAS BEEN ADJUSTED DUE TO THE PRESENCE OF SHALLOW GROUNDWATER.

THE WALL SUPPLIER SHAL PERFORM A DETAILED SEISMIC ANALYSIS FOR BACK TO BACK MSE WALLS WITH L/H LESS THAN 1.1, IF NECESSARY, AS REQUIRED BY FHWA PUBLICATION NO. FHWA-NHI-00-043.

SOIL PROPERTIES FOR DESIGN

SOIL TYPE	UNIT WEIGHT (PCF)	ANGLE OF FRICTION (DEGREES)
LIGHT WEIGHT ENGINEERED FILL (LWEF)	42	38
FOUNDATION SOIL	68	24
TYPE F	125	28
CONTROLLED LOW STRENGTH MATERIAL (CLSM)	42	38

(2)

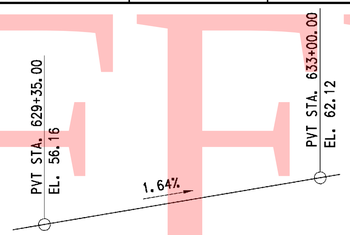

SR7 (NB)
VERTICAL CURVE DATA
NO SCALE

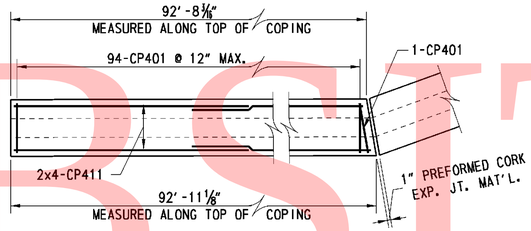

TYPE 1 PANEL (1 REQUIRED)

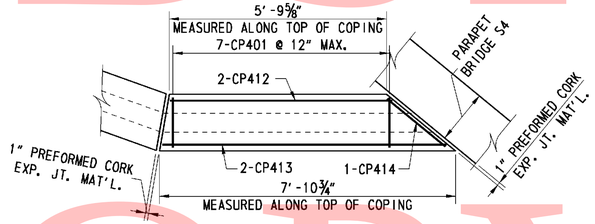

TYPE 2 PANEL (1 REQUIRED)

COPING REINFORCING PLANS
SCALE: ½" = 1'-0"

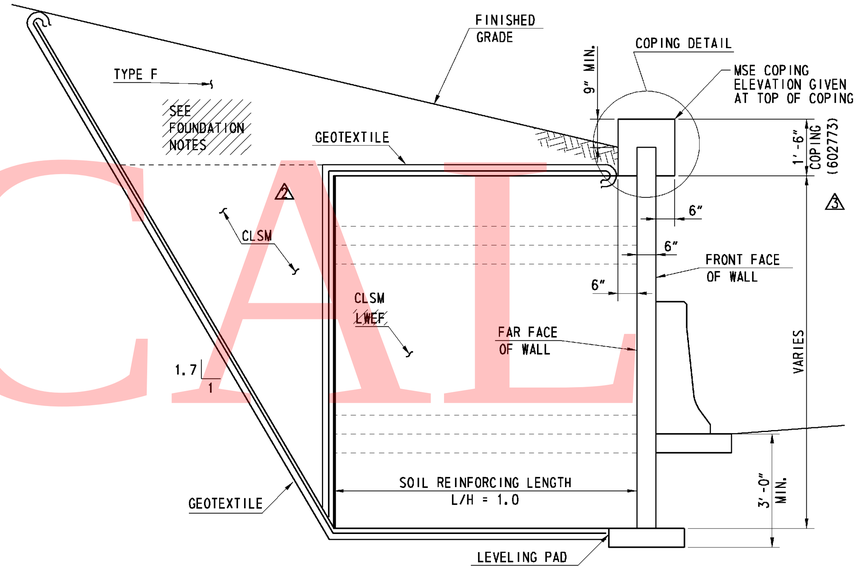

TYPICAL SECTION
(LOOKING BACK STATION)
SCALE: ½" = 1'-0"

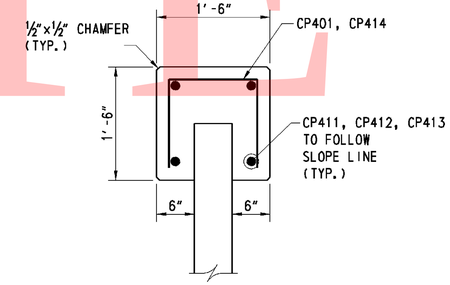

COPING DETAIL
SCALE: 1"= 1'-0"

	QTY.	SIZE	LENGTH	MARK	TYPE	A	B	C	D	H	K	O
COPING	101	4	3-6	CP401	17		1-2	1-2	1-2			
	8	4	47-9 1/16	CP411	STR							
	2	4	5-7	CP412	STR							
	2	4	7-8 1/8	CP413	STR							
	1	4	4-4 5/16	CP414	17		1-2	2-0 5/16	1-2			

BENDING DIMENSIONS (FEET-INCHES /QUARTER INCH)

SEE SHEET R7-07 FOR BAR BEND NOTES

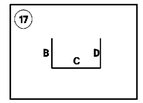

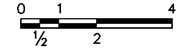

SCALE: ½"=1'-0"

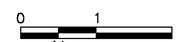

SCALE: 1"=1'-0"

UNOFFICIAL WEBSITE COPY

DELAWARE DEPARTMENT OF TRANSPORTATION	ADDENDUMS / REVISIONS		SR1 / I-95 INTERCHANGE	CONTRACT 28-090-03	BRIDGE NO.	RETAINING WALL 16 GENERAL NOTES AND TYPICAL SECTION	R16-01 SHEET NO. 619
	ADDENDUM NO. (2), UPDATED FOUNDATION NOTES, SECTION, 01/26/11, JSW			COUNTY NEW CASTLE	DESIGNED BY: JMS		TOTAL SHTS. 803
	ADDENDUM NO. (3), UPDATED GENERAL NOTES AND TYPICAL SECTION, 02/18/11, JSW				CHECKED BY: JSW		

2/14/2011 9:42:51 AM
M:\PROJECTS\2003\03059_DELTRNPK\SRIMALL\CADD\2809003\PLANS\RD38_WALL-16_SR1.DGN

TRAFFIC CONTROL - GENERAL NOTES

1. MAINTENANCE OF TRAFFIC DURING LANE CLOSURES AND LANE SHIFTS SHALL CONFORM TO CASE 5 OR CASE 9 OF THE DELAWARE MUTCD.

2. GRADING AND MAINTAINING HOT-MIX TRM THAT IS BEING USED AS A TRAVELWAY, DRIVEWAY, ACCESS RAMP, ETC. SHALL BE INCIDENTAL TO ITEM 763500 - MAINTENANCE OF TRAFFIC. EXCESS BASE COURSE MATERIAL SHALL BE PUSHED AHEAD AND USED IN THE NEXT SEGMENT AND SHALL BE INCIDENTAL TO THE PARTICULAR BASE COURSE PAY ITEM. NO PAYMENT SHALL BE MADE FOR TEMPORARY ROADWAY MATERIAL (TRM) USED TO PROTECT EDGE DROP-OFFS, UNLESS THE MATERIAL IS EVENTUALLY UTILIZED AS PART OF A PERMANENT ROADWAY AT WHICH TIME THE MATERIAL WOULD BE PAID FOR UNDER THE RESPECTIVE CONTRACT MATERIAL ITEM. CONSTRUCTION OF A PLANNED RUNAROUND OR DETOUR WOULD BE ELIGIBLE FOR PAYMENT AS SPECIFIED IN THE CONTRACT.

3. THIS PROJECT IS CONSIDERED A SIGNIFICANT PROJECT AS DEFINED BY DELDOT'S WORK ZONE MOBILITY PROCEDURES AND GUIDELINES. A TYPE B TRANSPORTATION MANAGEMENT PLAN (TMP) HAS BEEN PREPARED AND IS AVAILABLE FOR VIEWING BY CONTACTING THE DEPARTMENT'S SAFETY PROGRAMS MANAGER AT (302)659-4060. ALL MONITORING REQUIREMENTS OF THE TMP SHALL BE CONDUCTED BY DELDOT FORCES UNLESS OTHERWISE DIRECTED BY THE ENGINEER. MODIFICATIONS TO THE TMP SHALL BE COMPLETED BY THE CONTRACTOR IF CHANGES TO THE TIME RESTRICTIONS OR THE TRAFFIC CONTROL PLAN ARE DESIRED. THE MODIFIED TMP SHALL BE PREPARED BY A PROFESSIONAL ENGINEER, REGISTERED IN THE STATE OF DELAWARE.

4. A TYPE II TRUCK MOUNTED ATTENUATOR (TMA) SHALL BE REQUIRED ON THIS PROJECT DURING THE FOLLOWING PAVEMENT OPERATIONS: TEMPORARY/PERMANENT PAVEMENT MARKINGS, ROADSIDE SPRAYING, PATCHING, MILLING, SWEEPING, TEMPORARY TRAFFIC BARRIER PLACEMENT OR AS DIRECTED BY THE ENGINEER. THE ROLL AHEAD DISTANCE SHALL BE AS PER THE MANUFACTURER'S RECOMMENDATIONS. THE TMA SHALL CONFORM TO THE REQUIREMENTS OF SECTION 6F.82 OF THE DELAWARE MUTCD.

TRAFFIC CONTROL - PROJECT NOTES

1. AS THE FIRST ORDER OF WORK, PRIOR TO ANY CONSTRUCTION, THE ADVANCE SIGNING WILL BE ERECTED AS SHOWN ON THE WARNING SIGN PLAN. THE WARNING SIGNS SHALL REMAIN IN PLACE THROUGHOUT CONSTRUCTION AND MAINTAINED IN SATISFACTORY CONDITION IN ACCORDANCE WITH THE SPECIFICATIONS AND ATSSA'S QUALITY GUIDELINES FOR TEMPORARY TRAFFIC CONTROL DEVICES.

2. THE CONTRACTOR SHALL SUPPLY MESSAGE BOARDS UNDER ITEM 743004 - FURNISH AND MAINTAIN PORTABLE CHANGEABLE MESSAGE SIGN. MOVING THE MESSAGE BOARDS TO DIFFERENT LOCATIONS DURING CONSTRUCTION WILL BE INCIDENTAL TO ITEM 743004. AT A MINIMUM, MESSAGE BOARDS SHALL BE POSTED TWO WEEKS PRIOR TO THE START OF CONSTRUCTION AND CHANGES IN TRAFFIC PATTERNS. SIX PLASTIC DRUMS SHALL BE PLACED IN FRONT OF THE MESSAGE BOARD.

3. ROADWAY AND SHOULDER WORK SHALL BE PERFORMED IN A MANNER SUCH THAT POSITIVE DRAINAGE OF THE ROADWAY SURFACE IS MAINTAINED THROUGHOUT CONSTRUCTION. ALL WORK AND MATERIALS TO PROVIDE AND MAINTAIN THIS DRAINAGE SHALL BE INCIDENTAL TO ITEM 763500 - MAINTENANCE OF TRAFFIC.

4. FLOODLIGHTING SHALL BE PAID AS OUTLINED IN ITEM 743005, FURNISH AND MAINTAIN PORTABLE LIGHT ASSEMBLY-THE ATSSA SUPERVISOR SHALL APPROVE THE POSITION OF THE LIGHT ASSEMBLY. SHOULD THE NIGHT TIME OPERATIONS REQUIRE FLAGGER STATIONS OR LANE TAPERS, THE FLAGGERS AND LANE TAPERS AND WORK AREA SHALL BE ILLUMINATED AS DIRECTED BY THE ENGINEER.

5. ENTRANCE AND SIDE ROAD TIE-IN AREAS SHALL BE CONSTRUCTED ONLY TO THE EXTENT THAT CAN BE PAVED OR TEMPORARILY STABILIZED WITH HOT-MIX TRM AT THE END OF A WORK DAY.

6. THE CONTRACTOR SHALL PLACE A WEDGE OF HOT-MIX AT 20:1 AROUND CONSTRUCTED DRAINAGE INLETS PRIOR TO PLACEMENT OF FINAL HOT-MIX TYPE C PAVING. THE CONTRACTOR SHALL NOTCH DRAINAGE INLETS TO MAINTAIN POSITIVE DRAINAGE CONDITIONS ALONG THE ROADWAY PRIOR TO PLACEMENT OF TYPE C FINAL HOT-MIX PAVING. NOTCHES SHALL BE REPAIRED TO PROPER CONDITION PRIOR TO OVERLAY. COST OF THIS WORK SHALL BE INCIDENTAL TO ITEM 710001 - ADJUSTING AND REPAIRING EXISTING DRAINAGE INLET.

7. ALL TEMPORARY PAVEMENT MARKINGS SHALL BE EPOXY MATERIAL WHEN INSTALLED ON EXISTING OR TEMPORARY PAVEMENT FOR TEMPORARY TRAFFIC PATTERNS, UNLESS OTHERWISE INDICATED ON PLANS OR DIRECTED BY THE ENGINEER. DURING INTERIM MILLING OPERATIONS, TEMPORARY PAINT SHALL BE USED ON MILLED SURFACES. TEMPORARY STRIPING SHALL NOT BE INSTALLED ON THE FINAL SURFACE COURSE OR NEW PAVEMENT UNLESS IT IS REMOVABLE TAPE MATERIAL. WHERE PAVEMENT MARKINGS ARE NOT INDICATED ON THE PLANS, THE PAVEMENT MARKINGS FROM THE PREVIOUS STAGE ARE TO BE MAINTAINED OR THE FINAL PROPOSED PERMANENT MARKINGS ARE TO BE INSTALLED AND MAINTAINED UNLESS OTHERWISE DIRECTED BY THE ENGINEER.

8. ALL EXISTING PUBLIC ROADWAY LIGHTING, PARKING LOT LIGHTING AND PRIVATE LIGHTING WITHIN THE PROJECT LIMITS NOT DIRECTLY IMPACTED BY CONSTRUCTION SHALL REMAIN OPERATIONAL AT ALL TIMES THROUGHOUT THE CONSTRUCTION.

9. TRAFFIC OFFICERS SHALL BE UNIFORMED AND EQUIPPED WITH MARKED DELAWARE STATE POLICE VEHICLES WHICH SHALL INCLUDE A SPEED MEASURING DEVICE. THE ATSSA SUPERVISOR SHALL INFORM THE STATE TROOPER OF THE OVERALL MOT SCHEME, AS WELL AS THE SPECIFICS OF HIS/HER FUNCTION. THE CONTRACTOR SHALL BE REQUIRED TO INSURE THAT A TRAFFIC OFFICER IS ON DUTY DURING ALL PEAK HOURS AND DURING ALL PERIODS OF ANY LANE CLOSURES ON SR 7 OR I-95. PEAK HOURS SHALL BE DEFINED AS 5:00 a.m. - 9:00 a.m. AND 3:00 p.m. - 7:00 p.m. ON WEEKDAYS; 10:00 a.m. - 2:00 p.m. ON SATURDAYS; AND 4:00 p.m. - 8:00 p.m. ON SUNDAYS. THE PEAK HOUR DURATION MAY BE EXTENDED DURING HOLIDAYS AS DIRECTED BY THE ENGINEER.

10. THE CONTRACTOR SHALL REDUCE THE SPEED LIMIT ON SR 1/SR 7 TO 40 MPH, THROUGHOUT THE PROJECT LIMITS FOR THE DURATION OF THE PROJECT OR AS DIRECTED BY THE ENGINEER. THE SPEED ADVISORY SIGN LOCATIONS SHALL BE AS SHOWN ON THE ADVANCE WARNING SIGN PLANS OR AS DIRECTED BY THE ENGINEER. THE PAYMENT SHALL BE FOR EACH SIGN INSTALLED AND ACCEPTED UNDER ITEM 743504, WARNING SIGNS. THE CONTRACTOR SHALL REQUEST THAT THE NORTH DISTRICT OFFICE CONTACT DELDOT'S TRAFFIC SECTION TWO (2) WEEKS PRIOR TO ANY SPEED REDUCTIONS BEING IMPLEMENTED ON THE PROJECT. THE CONTRACTOR SHALL VERIFY THAT A "SPEED REDUCTION RESOLUTION" HAS BEEN PASSED PRIOR TO ERECTING ANY SPEED REDUCTION SIGNS IN THE CONSTRUCTION AREA.

11. THE CONTRACTOR SHALL BE REQUIRED TO RESTORE AREAS UTILIZED AS STAGING AREAS, MATERIALS/ EQUIPMENT STORAGE, FIELD OFFICE, ETC. DURING THE PROJECT'S CONSTRUCTION TO ITS ORIGINAL CONDITION. ALL COSTS SHALL BE INCIDENTAL TO ALL OF THE CONTRACT BID ITEMS.

△3 12. POSTED SPEEDS FOR THE EXISTING ROADWAYS/RAMPS ARE SHOWN ON SHEET 5. ANY TEMPORARY ROADWAY OR RAMPS SHALL BE DESIGNED TO MEET THE AASHTO CRITERIA BASED ON THE DESIGN SPEEDS SHOWN ON SHEET 5 AND 637 AS APPLICABLE.

△2 13. PIPE SEGMENTS 522 AND 523 MUST BE CONSTRUCTED IN ITS ENTIRETY PRIOR TO BEGINNING ANY EXCAVATION RIGHT OF SR 7 NB STA. 811+00 THROUGH SR 7 NB STA. 819+00, INCLUDING THE CONSTRUCTION OF RAMPS U AND U1.

UNOFFICAL WEBSITE COPY

3/1/2011 3:01:37 PM
M:\PROJECTS\2003\03059_DELTRNPK\SRTMALL\CADD\2809003\PLANS\CS02_SR1.DGN

DELAWARE DEPARTMENT OF TRANSPORTATION	ADDENDUMS / REVISIONS	NOT TO SCALE	SR1 / I-95 INTERCHANGE	CONTRACT 28-090-03	BRIDGE NO.	CONSTRUCTION PHASING, M.O.T., AND EROSION CONTROL PLAN	SHEET NO. 636
	△3 ADDED NOTES, 02/18/11, NRB			COUNTY NEW CASTLE	DESIGNED BY: EDJ		TOTAL SHTS. 803
					CHECKED BY: RLS		

TRAFFIC RESTRICTIONS

1. THE MAXIMUM NUMBER OF NIGHTS THAT THE SOUTHBOUND I-95 DETOUR IS IMPLEMENTED SHALL NOT EXCEED 10 NIGHTS.
   THE MAXIMUM NUMBER OF NIGHTS THAT THE NORTHBOUND I-95 DETOUR IS IMPLEMENTED SHALL NOT EXCEED 10 NIGHTS.
   THE MAXIMUM NUMBER OF NIGHTS THAT THE SOUTHBOUND SR 1 DETOUR IS IMPLEMENTED SHALL NOT EXCEED 8 NIGHTS.
   THE MAXIMUM NUMBER OF NIGHTS THAT THE NORTHBOUND SR 1 DETOUR IS IMPLEMENTED SHALL NOT EXCEED 20 NIGHTS.

△3 2. RAMP CLOSURES OR DETOURS TO OR FROM THE MALL OR ROAD A SHALL NOT BE ALLOWED BETWEEN ~~WEDNESDAY~~ FRIDAY △3 PRIOR TO THANKSGIVING AND JANUARY 3.

△3 3. LANE OR RAMP CLOSURES AND DETOURS SHALL NOT BE PERMITTED DURING HOLIDAYS AND MAJOR EVENTS AS LISTED BELOW: (RAMP E1 IS EXEMPT TO THIS RESTRICTION)
   - DECEMBER 24 THROUGH DECEMBER 27 (CHRISTMAS DAY)
   - DECEMBER 31 THROUGH JANUARY 3 (NEW YEARS DAY)
   - FRIDAY PRIOR TO EASTER THROUGH EASTER SUNDAY
   - THURSDAY PRIOR TO MEMORIAL DAY THROUGH THE TUESDAY FOLLOWING MEMORIAL DAY
   - DOVER INTERNATIONAL SPEEDWAY RACE WEEKENDS (THURSDAY PRIOR TO THE RACE EVENT THROUGH THE DAY AFTER THE RACE EVENT)
   - JULY 3 THROUGH JULY 5 (INDEPENDENCE DAY)
   - THURSDAY PRIOR TO LABOR DAY THROUGH THE TUESDAY FOLLOWING LABOR DAY
   - WEDNESDAY PRIOR TO THANKSGIVING DAY THROUGH THE MONDAY FOLLOWING THANKSGIVING DAY

4. THE FOLLOWING SCHEDULES INDICATE THE ALLOWABLE TIMES WHICH TRAFFIC ON I-95 AND SR 1/7 MAY BE DETOURED OR THE NUMBER OF LANES REDUCED. THE BEGIN SET-UP TO END TIMES ARE THE ENTIRE DURATION THAT LANE CLOSURES MAY BE IN EFFECT. THE END TIME REPRESENTS THE TIME AT WHICH ALL LANES OF TRAFFIC MUST BE FULLY OPERATIONAL.

I-95 SUMMER TIME
MAY 15 THROUGH SEPTEMBER 15

SUMMER TIME PERIOD		3 LANES OPEN; 1 LANE CLOSED	2 LANES OPEN; 2 LANES CLOSED	1 LANE OPEN; 3 LANES CLOSED	DETOURS *
MONDAY PM THROUGH FRIDAY AM	BEGIN SETUP	9:00 PM	10:00 PM	12:00 MID	12:00 MID
	END	5:00 AM	5:00 AM	5:00 AM	5:00 AM
FRIDAY PM THROUGH SATURDAY AM	BEGIN SETUP	10:00 PM	12:00 MID	NOT ALLOWED	NOT ALLOWED
	END	8:00 AM	6:00 AM		
SATURDAY PM THROUGH SUNDAY AM	BEGIN SETUP	8:00 PM	10:00 PM		
	END	8:00 AM	7:00 AM		
SUNDAY PM THROUGH MONDAY AM	BEGIN SETUP	9:00 PM	11:00 PM		
	END	5:00 AM	5:00 AM		

* INCLUDES DETOURS FOR OVERHEAD SIGN REMOVAL/INSTALLATION AND STEEL ERECTION FOR BRIDGE WORK.

I-95 NON-SUMMER TIME
SEPTEMBER 16 THROUGH MAY 14

NON-SUMMER TIME PERIOD		3 LANES OPEN; 1 LANE CLOSED	2 LANES OPEN; 2 LANES CLOSED	1 LANE OPEN; 3 LANES CLOSED	DETOURS *
MONDAY PM THROUGH FRIDAY AM	BEGIN SETUP	7:00 PM	9:00 PM	11:00 PM	11:00 PM
	END	5:00 AM	5:00 AM	5:00 AM	5:00 AM
FRIDAY PM THROUGH SATURDAY AM	BEGIN SETUP	9:00 PM	10:00 PM	12:00 MID	12:00 MID
	END	9:00 AM	7:00 AM	6:00 AM	6:00 AM
SATURDAY PM THROUGH SUNDAY AM	BEGIN SETUP	7:00 PM	10:00 PM	12:00 MID	12:00 MID
	END	10:00 AM	9:00 AM	7:00 AM	7:00 AM
SUNDAY PM THROUGH MONDAY AM	BEGIN SETUP	8:00 PM	10:00 PM	12:00 MID	12:00 MID
	END	5:00 AM	5:00 AM	5:00 AM	5:00 AM

* INCLUDES DETOURS FOR OVERHEAD SIGN REMOVAL/INSTALLATION AND STEEL ERECTION FOR BRIDGE WORK.

SR 1/7 SUMMER TIME
MAY 15 THROUGH SEPTEMBER 15

SUMMER TIME PERIOD		NORTHBOUND		SOUTHBOUND	
		1 LANE OPEN; 1 LANE CLOSED	DETOURS *	1 LANE OPEN; 1 LANE CLOSED	DETOURS *
MONDAY PM THROUGH FRIDAY AM	BEGIN SETUP	10:00 PM	10:00 PM	11:00 PM	11:00 PM
	END	5:00 AM	5:00 AM	6:00 AM	6:00 AM
FRIDAY PM THROUGH SATURDAY AM	BEGIN SETUP	NOT ALLOWED	NOT ALLOWED	NOT ALLOWED	NOT ALLOWED
	END				
SATURDAY PM THROUGH SUNDAY AM	BEGIN SETUP				
	END				
SUNDAY PM THROUGH MONDAY AM	BEGIN SETUP				
	END				

* INCLUDES DETOURS FOR OVERHEAD SIGN REMOVAL/INSTALLATION AND STEEL ERECTION FOR BRIDGE WORK.

SR 1/7 NON-SUMMER TIME
SEPTEMBER 16 THROUGH MAY 14

NON-SUMMER TIME PERIOD		NORTHBOUND		SOUTHBOUND	
		1 LANE OPEN; 1 LANE CLOSED	DETOURS *	1 LANE OPEN; 1 LANE CLOSED	DETOURS *
MONDAY PM THROUGH FRIDAY AM	BEGIN SETUP	9:00 PM	9:00 PM	10:00 PM	10:00 PM
	END	5:00 AM	5:00 AM	6:00 AM	6:00 AM
FRIDAY PM THROUGH SATURDAY AM	BEGIN SETUP	11:00 PM	11:00 PM	12:00 MID	12:00 MID
	END	8:00 AM	8:00 AM	7:00 AM	7:00 AM
SATURDAY PM THROUGH SUNDAY AM	BEGIN SETUP	11:00 PM	11:00 PM	10:00 PM	10:00 PM
	END	9:00 AM	9:00 AM	9:00 AM	9:00 AM
SUNDAY PM THROUGH MONDAY AM	BEGIN SETUP	11:00 PM	11:00 PM	10:00 PM	10:00 PM
	END	5:00 AM	5:00 AM	6:00 AM	6:00 AM

* INCLUDES DETOURS FOR OVERHEAD SIGN REMOVAL/INSTALLATION AND STEEL ERECTION FOR BRIDGE WORK.

5. STRUCTURAL STEEL ERECTION SHALL BE RESTRICTED TO NIGHTTIME CLOSURE HOURS ONLY.

6. CONSTRUCTION VEHICLE ACCESS TO THE I-95 WORK ZONES FROM I-95 MAY NOT DIRECTLY ENTER THE WORK ZONE FROM AN I-95 TRAVEL LANE. CONSTRUCTION VEHICLE ACCESS TO I-95 FROM THE WORK ZONE MAY NOT DIRECTLY ENTER A TRAVEL LANE. THESE VEHICLES MUST FIRST ACCELERATE WITHIN THE EXISTING SHOULDER AND THEN MERGE INTO TRAFFIC.

7. ACCESS TO ALL DELDOT MAINTENANCE ENTRANCES MUST BE MAINTAINED AT ALL TIMES.

△3 8. CONSTRUCTION IMPACTING TRAVEL LANES ON THE MALL RING ROAD OR RAMPS PROVIDING ACCESS TO OR FROM I-95 AND/OR SR 1/7 AND THE MALL ARE NOT PERMITTED BEGINNING THE ~~WEDNESDAY~~ FRIDAY △3 PRIOR TO THANKSGIVING THROUGH JANUARY 3.

9. THE INSIDE AND OUTSIDE SHOULDERS MAY NOT BE CLOSED CONCURRENTLY AT THE SAME LOCATION ALONG THE SAME SIDE OF I-95 AT ANY TIME.

10. NO EXISTING OVERHEAD/CANTILEVER SIGN STRUCTURE MAY BE REMOVED UNTIL AFTER THE NEW REPLACEMENT OVERHEAD/CANTILEVER SIGN STRUCTURE IS INSTALLED AND ACCEPTED, UNLESS NOTED ON THE PLANS OR OTHERWISE APPROVED BY THE ENGINEER.

11. RAMP S, U AND U1 PROVIDE ACCESS FROM THE MALL TO SR 1/7. AT LEAST ONE OF THESE RAMPS NEED TO BE MAINTAINED OPEN TO TRAFFIC AT ALL TIMES THROUGHOUT THE PROJECTS CONSTRUCTION.

△3 12. THE RAMP R1 BRIDGE IS BEING CONSTRUCTED UNDER CONTRACT T201009004 AND WILL PROVIDE AN ALTERNATE INGRESS/EGRESS FOR THE MALL. THE EXISTING MALL BRIDGE WILL NOT BE AVAILABLE FOR DEMOLITION UNTIL THE RAMP R1 BRIDGE IS COMPLETED, ACCEPTED AND OPEN TO TRAFFIC. THE ANTICIPATED DATE THE EXISTING MALL BRIDGE CAN BE RETIRED IS FEBRUARY 1, 2012.

△3 13. THE EXISTING MALL RING ROAD IS A PRIVATE ROAD AND IS NOT AVAILABLE FOR CONSTRUCTION VEHICLES OR PUBLIC DETOURS.

△3 14. CURRENTLY, THE NB SR 1/7 RAMP ONTO NB I-95 ENTERS I-95 AS THE 5TH THROUGH TRAFFIC LANE. THROUGHOUT ALL PHASES OF CONSTRUCTION, AT THE POINT WHERE THE NB SR 1/7 TRAFFIC ENTERS THE NB I-95, FIVE (5) THROUGH TRAFFIC LANES MUST BE MAINTAINED FROM THE ENTRANCE GORE TO THE NORTH THROUGH THE PROJECT LIMITS.

UNOFFICIAL WEBSITE COPY

UNOFFICIAL WEBSITE COPY

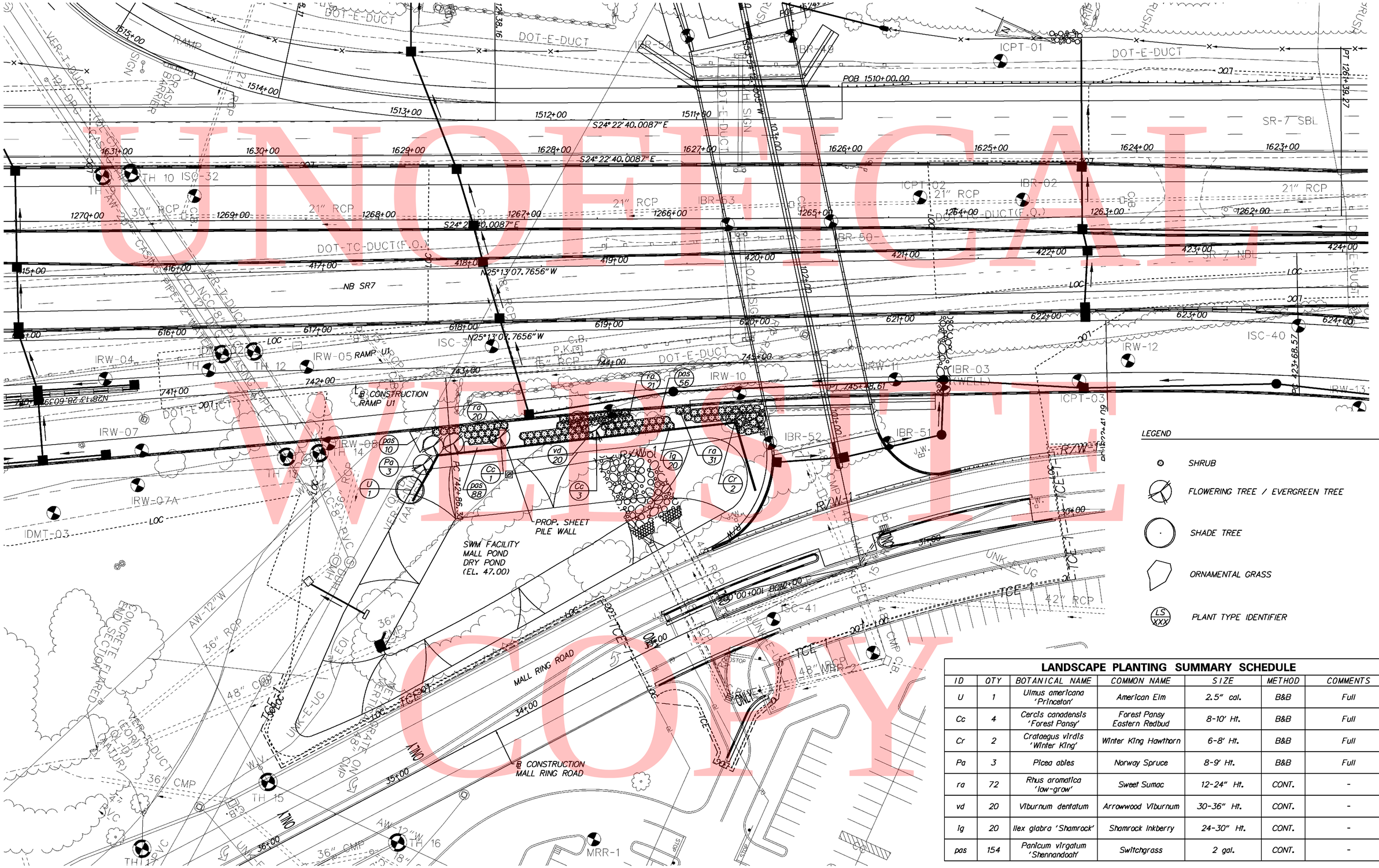

LANDSCAPE PLANTING SUMMARY SCHEDULE

ID	QTY	BOTANICAL NAME	COMMON NAME	SIZE	METHOD	COMMENTS
U	1	Ulmus americana 'Princeton'	American Elm	2.5" cal.	B&B	Full
Cc	4	Cercis canadensis 'Forest Pansy'	Forest Pansy Eastern Redbud	8-10' Ht.	B&B	Full
Cr	2	Crataegus virdis 'Winter King'	Winter King Hawthorn	6-8' Ht.	B&B	Full
Pa	3	Picea ables	Norway Spruce	8-9' Ht.	B&B	Full
ra	72	Rhus aromatica 'low-grow'	Sweet Sumac	12-24" Ht.	CONT.	-
vd	20	Viburnum dentatum	Arrowwood Viburnum	30-36" Ht.	CONT.	-
Ig	20	Ilex glabra 'Shamrock'	Shamrock Inkberry	24-30" Ht.	CONT.	-
pas	154	Panicum virgatum 'Shennandoah'	Switchgrass	2 gal.	CONT.	-

DELAWARE DEPARTMENT OF TRANSPORTATION

ADDENDUMS / REVISIONS	
ADDENDUM NO. 3 NEW SHEET	
02/18/2011, RLS	

SCALE 0 30 60 90 FEET

SR1 /I-95 INTERCHANGE - CHRISTIANA MALL ROAD BRIDGE

CONTRACT	BRIDGE NO.	1-223
T201009004	DESIGNED BY:	JAG
COUNTY	CHECKED BY:	SCS
NEW CASTLE		

LANDSCAPING PLAN CHRISTIANA MALL SWM FACILITY

SHEET NO.
681A
TOTAL SHTS.
164

2/16/2011 3:23:11 PM
M:\PROJECTS\2009\09085_CELTRAFF\STRUCT\CADD\09085023-PLANS\LS03_STRUCN

GENERAL NOTES

1. ALL ELECTRICAL WORK SHALL BE PERFORMED AND ALL MATERIAL PROVIDED SHALL BE IN ACCORDANCE WITH THE NATIONAL ELECTRIC CODE OF THE NATIONAL FIRE PROTECTION ASSOCIATION, TO ALL LOCAL AND SPECIAL LAWS, AND/OR TO ORDINANCES GOVERNING SUCH MATERIAL. CODE SHALL BE CONSIDERED THE MINIMUM REQUIREMENTS FOR THE ELECTRICAL WORK AND IF THERE IS A CONFLICT BETWEEN THE REQUIREMENTS SPECIFIED IN THE CONTRACT DOCUMENTS AND THE CODE, THE MORE STRINGENT REQUIREMENT WILL APPLY AS DETERMINED AND APPROVED BY THE ENGINEER. WHEN THESE REQUIREMENTS DO NOT GOVERN, AND WHERE NOT OTHERWISE SPECIFIED, ELECTRICAL MATERIALS SHALL CONFORM TO THE STANDARDIZATION RULES OF THE INSTITUTE OF ELECTRICAL ENGINEERS.

2. THE CONTRACTOR SHALL PROVIDE AND SECURE ALL ELECTRICAL INSPECTIONS AS REQUIRED AND PAY FOR THE SAME. THE ELECTRICAL CONTRACTOR SHALL OBTAIN AT HIS EXPENSE ALL NECESSARY PERMITS AND CERTIFICATES AS REQUIRED.

3. THE ELECTRICAL CONTRACTOR SHALL COORDINATE HIS WORK WITH ALL THE CONTRACTORS INVOLVED ON THIS PROJECT. THE ELECTRICAL CONTRACTOR SHALL COORDINATE WITH THE ENGINEER AND THE GENERAL SUPERINTENDENT THE LOCATIONS OF ALL CONDUIT AND POLE BASES TO ELIMINATE CONSTRUCTION CONFLICTS.

4. BURIED ELECTRICAL CABLE AND CONDUIT, AND OTHER UTILITIES MAY EXIST THROUGHOUT THIS PROJECT. THE EXISTING UTILITY LOCATIONS SHOWN ON THE PLANS ARE APPROXIMATE. THE CONTRACTOR SHALL BE RESPONSIBLE FOR LOCATING AND PREVENTING DAMAGE TO THEM, AND MAINTAINING THEM IN SERVICE WHEN AND WHERE REQUIRED. THE CONTRACTOR SHALL VERIFY THE EXACT LOCATIONS PRIOR TO COMMENCING WORK. THE CONTRACTOR SHALL VERIFY THE LOCATION OF ALL EXISTING UTILITIES BY HAND EXCAVATION PRIOR TO TRENCHING BY MACHINE.

5. THE ELECTRICAL CONTRACTOR SHALL GUARANTEE ALL WORK MATERIAL AND LABOR TO BE FREE FROM DEFECTS FOR A ONE YEAR PERIOD FROM THE TIME OF OWNER ACCEPTANCE. ANY DEFECTS OCCURRING DURING THIS PERIOD SHALL BE CORRECTED BY THE ELECTRICAL CONTRACTOR AT NO ADDITIONAL COST TO THE OWNER.

6. SERVICE RUNS ARE SHOWN IN APPROXIMATE LOCATIONS. THE CONTRACTOR SHALL LOCATE THE SERVICE RUNS IN A MANNER THAT AVOIDS CONFLICTS WITH ALL EXISTING AND PROPOSED FEATURES AS FIELD CONDITIONS DICTATE AND AS APPROVED BY THE ENGINEER.

7. TERMINATE ALL CONDUITS WHEN ENTERING ENCLOSURES WITH LOCKNUT AND BONDING BUSHINGS. ALL OTHER CONDUITS SHALL BE PROVIDED WITH BONDING BUSHINGS. ALL CONDUITS SHALL BE BONDED WITH THE GROUND WIRE.

8. COLOR CODING SHALL BE PROVIDED THROUGHOUT THE ENTIRE NETWORK FOR SERVICE,FEEDER, BRANCH AND CONTROL CONDUCTORS. EACH PHASE SHALL BE AN INDEPENDENT COLOR. CONDUCTORS SHALL HAVE FACTORY IMPREGNATED COLOR THROUGHOUT THEIR ENTIRE LENGTH. PHASE TAPING IS NOT PERMITTED.

9. EXISTING LIGHT POLES, JUNCTION WELLS, AND CABINETS TO BE REMOVED SHALL BE SALVAGED AND DELIVERED TO DELDOT NORTH DISTRICT MAINTENANCE SHOP, 39 EAST REGAL BLVD, NEWARK, DELAWARE.

10. ALL LIGHTING POLE BASES TO BE REMOVED SHALL BE REMOVED TO A MINIMUM OF 6 INCHES BELOW GRADE.

11. THE CONTRACTOR SHALL NOTIFY DELMARVA POWER TWO WEEKS IN ADVANCE TO ARRANGE FINAL POWER CONNECTIONS. CONTACT: MR. MARK SMITH 302-454-4138.

12. ALL FUSED CONNECTIONS SHALL BE MADE IN THE POLE BASE. SPLICES IN JUNCTION WELLS, JUNCTION AND PULL BOXES SHALL NOT BE FUSED.

13. THE CONTRACTOR SHALL VERIFY ALL DIMENSIONS AND CONDITIONS AT SITE PRIOR TO WORK.

14. WORK INCLUDES FURNISHING LABOR,MATERIAL,EQUIPMENT AND SERVICE NECESSARY AND INCIDENTAL TO PROPER COMPLETION OF THE ELECTRICAL WORK AS SHOWN. MINOR ITEMS,ACCESSORIES OR DEVICES NECESSARY FOR COMPLETION AND PROPER OPERATION OF ANY SYSTEM SHALL BE PROVIDED WHETHER OR NOT THEY ARE SPECIFICALLY CALLED FOR BY SPECIFICATIONS OR DRAWINGS.

15. USE CAUTION WHEN INSTALLING CONDUITS UNDER EXISTING STORM WATER MANAGEMENT FACILITIES . WHEN COMPLETE, ENSURE ALL STORM WATER MANAGEMENT FACILITIES ARE RESTORED TO EXISTING CONDITIONS.

16. ALL CONDUITS, JUNCTION WELLS, LIGHTING STANDARDS, ETC. SHALL BE STAKED OUT AND EVERY LOCATION APPROVED BY THE ENGINEER BEFORE ANY WORK IS DONE.

17. ALL GROUNDING CONDUCTORS IN PROPOSED UNDERGROUND CONDUITS SHALL BE STRANDED COPPER WITH SIZE AS NOTED IN THE LIGHTING SERVICE SCHEDULE.

18. THE CONTRACTOR SHALL VERIFY THE OPERATING VOLTAGE OF ALL CIRCUITS OF THE EXISTING LIGHTING SYSTEMS THAT ARE BEING TIED INTO TO ENSURE COMPATIBILITY WITH PROPOSED LUMINAIRES.

19. THE CONTRACTOR SHALL VERIFY THE OPERATING CIRCUIT AND PHASE OF ALL EXISTING ROADWAY LIGHTING EQUIPMENT WHERE THE ELECTRICAL SERVICE IS BEING INTERRUPTED. THE EXISTING ROADWAY EQUIPMENT SHALL BE RECONNECTED TO THE SAME CIRCUIT AND PHASE AS IS EXISTING UNLESS OTHERWISE NOTED ON THE PLANS.

20. ALL STATION, OFFSET AND DIMENSION INFORMATION SHOWN FOR PROPOSED LIGHTING STANDARDS IS TO THE CENTER OF THE POLE BASE.

21. THE ELECTRICAL CONTRACTOR SHALL COORDINATE THE INSTALLATION OF LIGHTING CONDUITS WITH ITMS CONDUITS. ITMS AND LIGHTING CONDUITS MAY SHARE A COMMON TRENCH BUT SHALL NOT SHARE COMMON JUNCTION WELLS.

22. EXISTING ROADWAY LIGHTING CONDUITS SHALL BE EXISTING TO REMAIN UNLESS NOTED OTHERWISE ON THE PLANS.

23. SPLICES FOR ALL ROADWAY LIGHTING ELECTRICAL CABLES, INCLUDING RE-CONNECTION OF EXISTING IMPACTED ELECTRICAL CABLES, SHALL BE COMPLETE USING APPROVED SPLICE KITS OR METHODS APPROVED BY THE ENGINEER AND SHALL BE INCIDENTAL TO THE SUPPLY AND INSTALLATION OF VARIOUS ROADWAY LIGHTING ELECTRICAL CABLES.

24. ALL PROPOSED DAVIT ARM LIGHTING STANDARDS SHALL BE INSTALLED WITH BREAKAWAY TRANSFORMER BASES, WHETHER PROTECTED OR UNPROTECTED, UNLESS OTHERWISE NOTED.

25. WHERE INDICATED ON THE PLANS TO REMOVE EXISTING LIGHTING STANDARD, THIS SHALL INCLUDE REMOVAL OF THE EXISTING LIGHTING STANDARD AND FOUNDATION, UNLESS OTHERWISE NOTED. PAYMENT FOR REMOVAL OF EXISTING LIGHT POLES SHALL BE MADE UNDER ITEM 746811. PAYMENT FOR REMOVAL OF EXISTING POLE BASES SHALL BE MADE UNDER ITEM 746830.

26. PAYMENT FOR REMOVAL OF EXISTING JUNCTION WELLS SHALL BE MADE UNDER ITEM 744525.

27. PAYMENT FOR RELOCATION OF EXISTING HIGH MAST LIGHT TOWERS AND ASSOCIATED ELECTRICAL EQUIPMENT SHALL BE MADE UNDER ITEM 746620.

28. PAYMENT FOR THE REMOVAL OF EXISTING HIGH MAST LIGHT TOWERS SHALL BE MADE UNDER ITEM 21100 - REMOVAL OF STRUCTURES AND OBSTRUCTIONS. PAYMENT FOR REMOVAL OF THE EXISTING HIGH MAST ELECTRICAL CABINET AND EQUIPMENT SHALL BE PAID FOR UNDER ITEM 747504 - REMOVAL OF POLE OR POST MOUNTED CABINET.

29. POLE NUMBERS, CIRCUITS AND CABLE SIZES FOR EXISTING ROADWAY LIGHTING OBTAINED FROM DELDOT CONTRACT NOS. 93-101-01, 91-101-04, AND 7072.

30. THE ELECTRICAL CONTRACTOR SHALL FAMILIARIZE HIMSELF WITH ALL THE ELECTRICAL/LIGHTING WORK BEING PERFORMED UNDER CONTRACT T201009004.01. ALL WORK SHALL BE COORDINATED TO ENSURE NO PROLONGER OUTAGES TO THE EXISTING OR PROPOSED LIGHTING SYSTEM.

31. UNDERGROUND CONDUITS SHALL BE SLOPED TO DRAIN TO THE NEAREST JUNCTION WELL. IF THIS CANNOT BE ACCOMPLISHED, PROVIDE A DRAINAGE TEE AT LOW POINT OF CONDUIT RUN. DRAINAGE TEES SHALL BE INCIDENTAL TO ITEM 745526 FOR 3" CONDUIT, 745527 FOR 2.5" CONDUIT AND 745528 FOR 2" CONDUIT.

△3 32. EXACT CONDUIT ROUTING TO UNDERPASS LIGHTS SHALL BE DETERMINED IN THE FIELD. INSTALLATIONS SHALL MEET THE REQUIREMENTS OF THE NATIONAL ELECTRIC CODE. INSTALLATION OF ALL CONDUITS ASSOCIATED WITH UNDERPASS LIGHTING SHALL BE PAID FOR UNDER ITEM 745549 - INSTALLATION OF BRIDGE-MOUNTED CONDUIT FROM WORK AREA ABOVE BRIDGE DECK. ANCHORS, BOLTS, CLAMPS, EXPANSION COUPLINGS, CONDUIT FITTINGS, FLEXIBLE CONDUIT AND ANY OTHER INCIDENTALS NECESSARY TO INSTALL THE CONDUIT AND CONNECT TO THE UNDERPASS LIGHT SHALL BE INCIDENTAL TO THIS ITEM.

TEMPORARY LIGHTING

THE EXISTING ROADWAY LIGHTING WILL BE IMPACTED DURING VARIOUS PHASES OF CONSTRUCTION. TEMPORARY LIGHTING SHALL BE USED TO SUPPLEMENT THE EXISTING LIGHTING TO ILLUMINATE THE TRAVEL WAY AS REQUIRED DURING THESE PHASES OF CONSTRUCTION.

ROADWAY LIGHTING SHALL BE PROVIDED AT ALL DECISION POINTS (GORE AREAS, WEAVING AREAS, RAMP TERMINALS, ACCELERATION LANES AND DECELERATION LANES) THROUGHOUT THE DURATION OF CONSTRUCTION. THIS LIGHTING MAY CONSIST OF A COMBINATION OF TEMPORARY LIGHTING UNITS, USE OF EXISTING ROADWAY LIGHTING, USE OF FINAL ROADWAY LIGHTING,TEMPORARY UNDERGROUND OR OVERHEAD WIRING, AND TEMPORARY ELECTRICAL SERVICES. THE CONTRACTOR IS ENCOURAGED TO MAKE OPERATIONAL THE PERMANENT LIGHTING AS SOON AS POSSIBLE TO MINIMIZE THE USE OF TEMPORARY LIGHTING.

TEMPORARY LIGHTING SHALL BE PAID FOR UNDER THE LUMP SUM ITEM 746552 - FURNISH AND INSTALL TEMPORARY LIGHTING.

LEGEND

- (LST X) (LST X) — LIGHTING STANDARD IDENTIFIER (EXISTING AND PROPOSED)
- (LSR X) (LSR X) — LIGHTING SERVICE RUN IDENTIFIER (EXISTING AND PROPOSED)
- (JW X) (JW X) — JUNCTION WELL & TYPE (EXISTING AND PROPOSED)
- (HM X) (HM X) — HIGH MAST TOWER AND LUMINAIRES (EXISTING AND PROPOSED)
- (UP X) (UP X) — UNDERPASS LUMINAIRE (EXISTING AND PROPOSED)
- (CA X) (CA X) — LIGHTING CONTROL CENTER & TYPE (EXISTING AND PROPOSED)
- EXISTING OFFSET LUMINAIRE
- EXISTING LIGHTING STANDARD
- PROPOSED COBRAHEAD LUMINAIRE, SINGLE DAVIT ARM
- EXISTING HIGH MAST TOWER, (6) 1000W HPS LUMINAIRES (CONCRETE SLAB; DIRECTION FOR LOWERING POLE)
- EXISTING HIGH MAST TOWER ELECTRICAL CABINET
- PROPOSED HIGHMAST TOWER (5) 1000W HPS LUMINAIRES
- PROPOSED HIGHMAST TOWER (3) 1000W HPS LUMINAIRES
- PROPOSED UNDERPASS LUMINAIRE
- PROPOSED LIGHTING CONTROL CABINET
- EXISTING LIGHTING CONTROL CABINET
- PROPOSED LIGHTING CONDUIT
- J.W. — EXISTING JUNCTION WELL
- J.W. — PROPOSED JUNCTION WELL, TYPE 1
- PROPOSED JUNCTION WELL, TYPE 4
- J.B. — STRUCTURE MOUNTED JUNCTION BOX
- JB — JUNCTION BOX IN CONCRETE BARRIER
- P — PROPOSED SERVICE PEDESTAL - ELECTRIC SERVICE METER
- E — PROPOSED DELMARVA TRANSFORMER
- (RM O) — REMOVE BY OTHERS
- (RM C) — REMOVE BY CONTRACTOR
- (RL C) — RELOCATE BY CONTRACTOR
- (AB) — ABANDON

UNOFFICIAL WEBSITE COPY

2/25/2011 8:37:09 AM
M:\PROJECTS\2003\03059_DELTRNPK\SRIMALL\CADD\2809003\PLANS\CP60_LI_SR1.DGN

DELAWARE DEPARTMENT OF TRANSPORTATION

ADDENDUMS / REVISIONS	
ADDENDUM NO. △3 ADDED NOTE	
02/25/2011, HEH	

NOT TO SCALE

SR1 / I-95 INTERCHANGE

CONTRACT	28-090-03
COUNTY	NEW CASTLE
BRIDGE NO.	
DESIGNED BY:	SMK
CHECKED BY:	HEH

LIGHTING PLAN GENERAL NOTES & LEGEND

	LI-01
SHEET NO.	682
TOTAL SHTS.	803

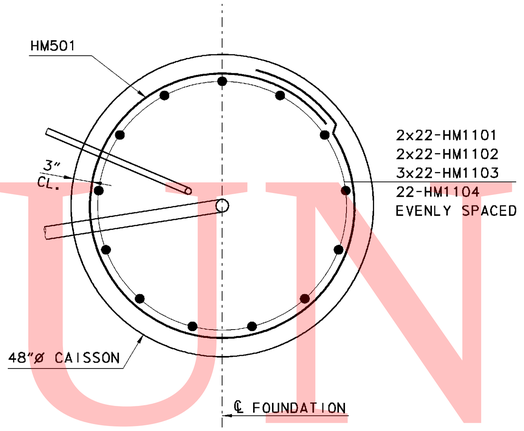

PLAN
HIGH MAST LIGHTING FOUNDATION

SCALE: 1"= 1'-0"

HIGH MAST LIGHTING FOUNDATION LENGTHS	
NO.	A
HM-1	25'-0"
HM-2	15'-0"
HM-3	20'-0"
HM-4	15'-0"
HM-5	20'-0"
HM-6	20'-0"
HM-7	35'-0"
HM2-1	25'-0"

GENERAL NOTES

SPECIFICATIONS: DELDOT STANDARD SPECIFICATIONS, AUGUST 2001 AND ALL CURRENT INTERIMS.

STANDARD SPECIFICATIONS FOR STRUCTURAL SUPPORTS FOR HIGHWAY SIGNS, LUMINAIRES AND TRAFFIC SIGNALS, 4TH EDITION, 2001, AND ALL CURRENT INTERIMS.

PORTLAND CEMENT CONCRETE : CONCRETE SHALL CONFORM TO SECTION 812, CLASS B.

REINFORCEMENT: REINFORCEMENT SHALL CONFORM TO SECTION 603, GRADE 60.

ANCHOR BOLTS: ANCHOR BOLTS SHALL BE HOT-DIPPED GALVANIZED AND MEET THE REQUIREMENTS OF AASHTO M 314. ANCHOR BOLTS SHALL HAVE A MINIMUM YIELD STRENGTH OF 55,000 PSI.

NOTES

1. COORDINATE ANCHOR BOLT PLACEMENT AND EMBEDMENT LENGTH WITH HIGH MAST POLE MANUFACTURER.
2. PAYMENT FOR HIGH MAST LIGHTING FOUNDATIONS INCLUDING CONCRETE PADS, SHALL BE PAID FOR UNDER ITEM #~~746561, HIGH MAST LIGHTING POLE AND FOUNDATION.~~ 3 602774 - MASONRY FOR LIGHT POLE FOUNDATION.
3. FOR HM-3, TEMPORARY CASING SHALL BE USED FOR THE ENTIRE LENGTH OF THE DRILLED SHAFT DURING CONSTRUCTION IN ACCORDANCE WITH THE SPECIFICATIONS.

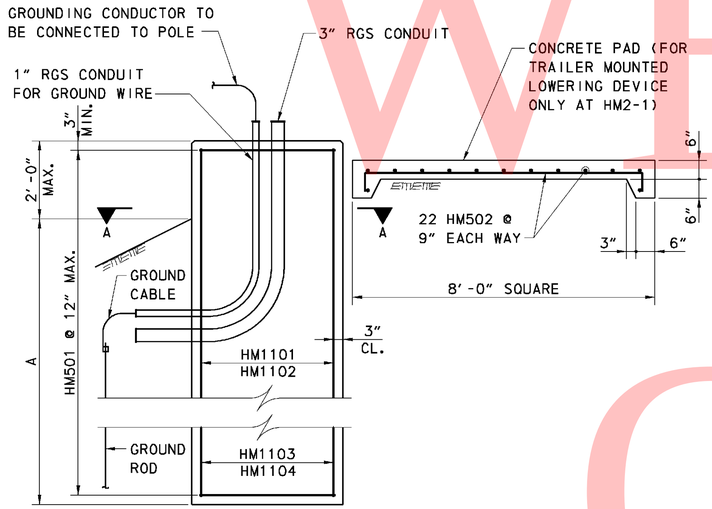

ELEVATION
HIGH MAST LIGHTING FOUNDATION

SCALE: NTS

REINFORCING BAR CHART							
QTY.	SIZE	LENGTH	MARK	TYPE	B	C	O
183	5	13'-0"	HM501	T3	2'-2"	10'-10"	3'-5⅜"
44	11	24'-6"	HM1101	STR			
44	11	14'-6"	HM1102	STR			
66	11	19'-6"	HM1103	STR			
22	11	34'-6"	HM1104	STR			
22	5	8'-6"	HM502	T2	7'-6"	6"	6"

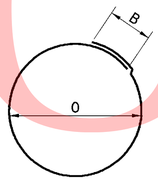

C= CIRCUMFERENCE

TYPE T3

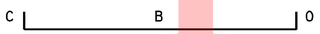

TYPE T2

SCALE: 1" = 1'-0"

UNOFFICAL WEBSITE COPY

2/14/2011 10:52:11 AM
M:\PROJECTS\2003\03059_DELTRNPK\SRIMALL\CADD\2809003\PLANS\CP78C_LI_SR1.DGN

DELAWARE DEPARTMENT OF TRANSPORTATION	ADDENDUMS / REVISIONS		SR1 / I-95 INTERCHANGE	CONTRACT	BRIDGE NO.	HIGHMAST LIGHTING FOUNDATIONS	LI-24
	ADDENDUM NO. 3, UPDATED NOTES, 02/18/11, JSW			28-090-03			SHEET NO. 704
				COUNTY: NEW CASTLE	DESIGNED BY: JMS		TOTAL SHTS. 803
					CHECKED BY: JSW		

PAVEMENT MARKINGS LEGEND

SYMBOL	ITEM	QUANTITY
(A)	6" SOLID WHITE EPOXY RESIN PAVEMENT STRIPING (ITEM 748507)	705 LF
(B)	6" SOLID YELLOW EPOXY RESIN PAVEMENT STRIPING (ITEM 748507)	705 LF
(C)	6" DASHED WHITE EPOXY RESIN PAVEMENT STRIPING, 10' LINE & 30' GAP (ITEM 748507)	176 LF
(D)	12" SOLID WHITE EPOXY RESIN PAVEMENT STRIPING (ITEM 748509)	345 LF
(E)	12" DASHED WHITE EPOXY RESIN PAVEMENT STRIPING, 3' LINE & 9' GAP (ITEM 748509)	195 LF

CONDUIT RUN SCHEDULE

CR*	*OF CON	SIZE	LENGTH	B/T/O	AMOUNT AND TYPE OF CABLE/ WIRE
1	1	4"	125'	T	Comm. Cable
2	1	4"	80'	B	Comm. Cable
3	1	4"	10'	T	Comm. Cable
4	2	2.5"	15'	T	Wavetronix Cable, Solar Power Cable
5	1	4"	560'	T	Comm. Cable
* 6	1	4"	600'	T	Comm. Cable

B = BORE, T = TRENCH, O = OPEN CUT.
* QUANTITY REFLECTS CONTINUATION OF PATHWAY SHOWN ON SHEET SSC-2

NOTES:

1. ALL PROPOSED ITMS CONNECTIONS AND TERMINATIONS SHALL BE COMPLETED BY DELDOT TRAFFIC FORCES. THE CONTRACTOR SHALL CONTACT DELDOTS SIGNAL CONSTRUCTION MANAGER AT 302.222.5920 TEN (10) DAYS PRIOR TO REQUIRED WORK
2. ALL UNDERGROUND ITMS FACILITIES TO BE INSTALLED BY THE CONTRACTOR. PRIOR TO COMPLETION OF UNDERGROUND FACILITIES THE CONTRACTOR SHALL CONTACT DELDOT'S SIGNAL CONSTRUCTION MANAGER AT 302.222.5920 TEN (10) DAYS PRIOR TO COMPLETION OF FACILITY.
3. ALL PROPOSED ITMS DEVICE TO BE FURNISHED AND INSTALLED BY DELDOT TRAFFIC FORCES. UPON CONTACT BY THE CONTRACTOR DELDOT TRAFFIC FORCES WILL DEVELOP A SCHEDULE OF WHEN WORK CAN BE PERFORMED AVOIDING CONFLICTS WITH THE GENERAL CONTRACTORS SCHEDULE.
4. CONTRACTOR SHALL BE RESPONSIBLE FOR ALL INSTALLATION AND REMOVAL OF ALL PROPOSED, TEMPORARY AND EXISTING MARKINGS AS REQUIRED. ALL PROPOSED MARKINGS SHALL TIE INTO EXISTING MARKINGS IN ACCORDANCE WITH THE MUTCD AND AS DIRECTED BY THE DELDOT'S CONSTRUCTION ENGINEER.
5. THE CONTRACTOR SHALL INSTALL AND REMOVE THE REGULATORY, WARNING, AND SPECIAL SIGNS AND POSTS WITHIN THE CONTRACT LIMITS, AS SHOWN. DELDOT SHALL FABRICATE AND SUPPLY THE REGULATORY, WARNING, AND SPECIAL SIGNS AND POSTS TO THE CONTRACTOR. FOR COORDINATION AND PICK UP OF ALL SIGNS AND POSTS, THE CONTRACTOR SHALL CONTACT DELDOT'S SIGN SHOP AT 302.760.2581. ALLOW FOUR (4) WEEKS FOR DELIVERY. ALL SIGNING MATERIALS REMOVED FROM THIS PROJECT SHALL BE RETURNED TO DELDOT'S SIGN SHOP.
6. ALL EXISTING OVERHEAD AND BRIDGE MOUNTED SIGNS AND STRUCTURES SHALL BE REMOVED BY THE CONTRACTOR WITHIN THE CONTRACT LIMITS UNLESS OTHERWISE NOTED. THE CONTRACTOR SHALL FURNISH AND INSTALL ALL PROPOSED OVERHEADS AND CANTILEVER SIGN STRUCTURES, FOUNDATIONS, AND SIGNS. THE CONTRACTOR SHALL RETURN ALL SIGNS REMOVED FROM THE PROJECT TO DELDOT'S SIGN SHOP. THE CONTRACTOR SHALL CONTACT DELDOT'S SIGN SHOP AT 302.760.2581 TO ARRANGE FOR DELIVERY OF SIGNS.
7. THE CONTRACTOR SHALL INSTALL RAISED PAVEMENT MARKERS WITHIN THE PROJECT LIMITS IN ACCORDANCE WITH THE DE-MUTCD.

BEGIN CONTRACT 28-090-03 STATION 360+75

MATCH LINE – SEE SHEET SSC-18

MATCH LINE – SEE SHEET SSC-2

TIE INTO EXISTING ITMS PATHWAY

TIE INTO EXISTING MARKINGS

PROPOSED RTMS DETECTOR, POLE, CABINET, CABLE AND SOLAR EQUIPMENT. TO BE FURNISHED AND INSTALLED BY DELDOT TRAFFIC FORCES. DETECTOR TO COMMUNICATE TO THE TMC VIA FIBER CONNECTION AND BE POWERED VIA SOLAR POWER.

REMOVE EXISTING CANTILIVERE SIGN STRUCTURE AND SIGN. RETURN SIGN TO DELDOT'S SIGN SHOP.

REMOVE EXISTING OVERHEAD SIGN STRUCTURE AND SIGNS. RETURN SIGNS TO DELDOT'S SIGN SHOP.

EXIT 162
273
Newark
New Castle
EXIT ONLY

SPEED LIMIT 55

NOTICE EMERGENCY PARKING ONLY ON RT1

LEFT EXIT 165C
NORTH 95
NORTH 7 Wilmington Philadelphia
SOUTH TO 95 Churchmans Crossing

(3) OH-1
Panel A
13' x4'-6"
40' x22'
Panel B
11' x2'-6"
18' x16'
Upright
4' x10'

EXIT 164
7 SOUTH
Christiana Mall Road
EXIT ONLY

TO 295 NORTH 495 EXIT 165C

LEFT EXIT 165C
NORTH 95 Wilmington Philadelphia
NORTH 7 SOUTH TO 95 Churchmans Crossing
EXIT ONLY

(3) OH-2
Panel A
13' x4'-6"
40' x22'
Upright
4' x10'

TO 295 NORTH 495 EXIT 165C

SIGNING LEGEND

(1)	REMOVE EXISTING SIGN
(2)	EXISTING SIGN TO REMAIN
(3)	PLACE NEW SIGN
(4)	RENEW EXISTING SIGN
(5)	REPOSITION EXISTING SIGN

DENSE TREES, BRUSH, EXIST. R/W, C.M., STONES, DENSE, DOT-E-DUCT, DOT-TC-DUCT(5 CA), SR 1 NB, SR 1 SB, STATE ROUTE 1 SB, STATE ROUTE 1 NB, RIP-RAP, DOWNSPOUT, FOOT BRIDGE, 15" RCP, 24" RCP, 36" RCP, C.B., C.M.P., INLET, NOTICE, 355+00, 356+00, 357+00, 358+00, 359+00, 360+00, 361+00, 362+00, 363+00, 364+00, 365+00, 366+00, 367+00, LOC

UNOFFICIAL WEBSITE COPY

DELAWARE DEPARTMENT OF TRANSPORTATION	ADDENDUMS / REVISIONS: ADDENDUM NO. 3 VOIDED SHEET; MODIFIED ITMS DESIGN SEE SHEET 711A, 02/18/2011, JCR	SCALE 0 50 100 150 FEET	SR1 / I-95 INTERCHANGE	CONTRACT 28-090-03; COUNTY NEW CASTLE; BRIDGE NO.; DESIGNED BY:; CHECKED BY:	SIGNING, STRIPING & CONDUIT PLAN; SSC-1; SHEET NO. 711; TOTAL SHTS. 803

1/27/2009 1:28:48 PM
M:\PROJECTS\2003\03059_DELTRNPK\SRTMALL\CADD\2809003\PLANS\CP01_SSC_SR1DGN

PAVEMENT MARKINGS LEGEND

SYMBOL	ITEM	QUANTITY
(A)	6" SOLID WHITE EPOXY RESIN PAVEMENT STRIPING (ITEM 748507)	705 LF
(B)	6" SOLID YELLOW EPOXY RESIN PAVEMENT STRIPING (ITEM 748507)	705 LF
(C)	6" DASHED WHITE EPOXY RESIN PAVEMENT STRIPING, 10' LINE & 30' GAP (ITEM 748507)	176 LF
(D)	12" SOLID WHITE EPOXY RESIN PAVEMENT STRIPING (ITEM 748509)	345 LF
(E)	12" DASHED WHITE EPOXY RESIN PAVEMENT STRIPING, 3' LINE & 9' GAP (ITEM 748509)	195 LF

CONDUIT RUN SCHEDULE

CR*	*OF CON	SIZE	LENGTH	B/T/O	AMOUNT AND TYPE OF CABLE/ WIRE
1	1	4"	125'	T	Comm. Cable
2	1	4"	80'	B	Comm. Cable
3	2	2.5"	10'	T	Comm. Cable
4					
5	1	4"	560'	T	Comm. Cable
* 6	1	4"	600'	T	Comm. Cable

B = BORE, T = TRENCH, O = OPEN CUT.
* QUANTITY REFLECTS CONTINUATION OF PATHWAY SHOWN ON SHEET SSC-2

NOTES:

1. ALL PROPOSED ITMS CONNECTIONS AND TERMINATIONS SHALL BE COMPLETED BY DELDOT TRAFFIC FORCES. THE CONTRACTOR SHALL CONTACT DELDOTS SIGNAL CONSTRUCTION MANAGER AT 302.222.5920 TEN (10) DAYS PRIOR TO REQUIRED WORK
2. ALL UNDERGROUND ITMS FACILITIES TO BE INSTALLED BY THE CONTRACTOR. PRIOR TO COMPLETION OF UNDERGROUND FACILITIES THE CONTRACTOR SHALL CONTACT DELDOT'S SIGNAL CONSTRUCTION MANAGER AT 302.222.5920 TEN (10) DAYS PRIOR TO COMPLETION OF FACILITY.
3. ALL PROPOSED ITMS DEVICE TO BE FURNISHED AND INSTALLED BY DELDOT TRAFFIC FORCES. UPON CONTACT BY THE CONTRACTOR DELDOT TRAFFIC FORCES WILL DEVELOP A SCHEDULE OF WHEN WORK CAN BE PERFORMED AVOIDING CONFLICTS WITH THE GENERAL CONTRACTORS SCHEDULE.
4. CONTRACTOR SHALL BE RESPONSIBLE FOR ALL INSTALLATION AND REMOVAL OF ALL PROPOSED, TEMPORARY AND EXISTING MARKINGS AS REQUIRED. ALL PROPOSED MARKINGS SHALL TIE INTO EXISTING MARKINGS IN ACCORDANCE WITH THE MUTCD AND AS DIRECTED BY THE DELDOT'S CONSTRUCTION ENGINEER.
5. THE CONTRACTOR SHALL INSTALL AND REMOVE THE REGULATORY, WARNING, AND SPECIAL SIGNS AND POSTS WITHIN THE CONTRACT LIMITS, AS SHOWN. DELDOT SHALL FABRICATE AND SUPPLY THE REGULATORY, WARNING, AND SPECIAL SIGNS AND POSTS TO THE CONTRACTOR. FOR COORDINATION AND PICK UP OF ALL SIGNS AND POSTS, THE CONTRACTOR SHALL CONTACT DELDOT'S SIGN SHOP AT 302.760.2581. ALLOW FOUR (4) WEEKS FOR DELIVERY. ALL SIGNING MATERIALS REMOVED FROM THIS PROJECT SHALL BE RETURNED TO DELDOT'S SIGN SHOP.
6. ALL EXISTING OVERHEAD AND BRIDGE MOUNTED SIGNS AND STRUCTURES SHALL BE REMOVED BY THE CONTRACTOR WITHIN THE CONTRACT LIMITS UNLESS OTHERWISE NOTED. THE CONTRACTOR SHALL FURNISH AND INSTALL ALL PROPOSED OVERHEADS AND CANTILEVER SIGN STRUCTURES, FOUNDATIONS, AND SIGNS. THE CONTRACTOR SHALL RETURN ALL SIGNS REMOVED FROM THE PROJECT TO DELDOT'S SIGN SHOP. THE CONTRACTOR SHALL CONTACT DELDOT'S SIGN SHOP AT 302.760.2581 TO ARRANGE FOR DELIVERY OF SIGNS.
7. THE CONTRACTOR SHALL INSTALL RAISED PAVEMENT MARKERS WITHIN THE PROJECT LIMITS IN ACCORDANCE WITH THE DE-MUTCD.

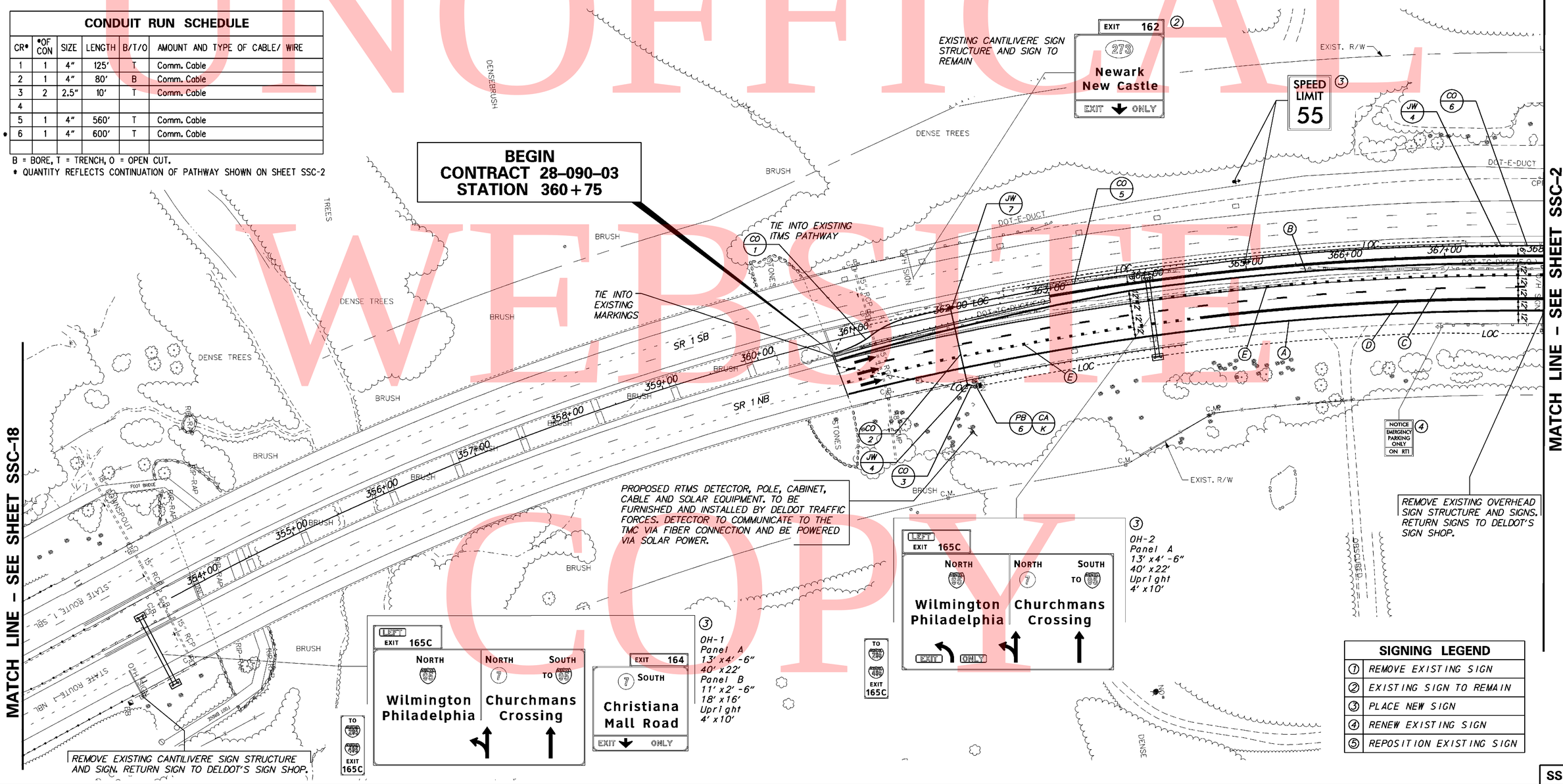

DELAWARE DEPARTMENT OF TRANSPORTATION	ADDENDUMS / REVISIONS: ADDENDUM NO. 1 THIS SHEET 711A; REPLACES VOIDED SHEET 711; 02/18/2011, JCR	SCALE 0 50 100 150 FEET	SR1 / I-95 INTERCHANGE	CONTRACT 28-090-03; COUNTY NEW CASTLE; BRIDGE NO.; DESIGNED BY: RK&K; CHECKED BY: JCR	SIGNING, STRIPING & CONDUIT PLAN	SSC-1; SHEET NO. 711A; TOTAL SHTS. 803

1/27/2009 1:28:48 PM
M:\PROJECTS\59_DELTRNPK\SR1MALL\CADD\28090003\PLANS\CP79_SSC_SR1.DGN

UNOFFICIAL WEBSITE COPY

NOTES:

1. ALL PROPOSED ITMS CONNECTIONS AND TERMINATIONS SHALL BE COMPLETED BY DELDOT FORCES. THE CONTRACTOR SHALL CONTACT DELDOTS SIGNAL CONSTRUCTION MANAGER AT 302.222.5920 TEN (10) DAYS PRIOR TO REQUIRED WORK
2. ALL UNDERGROUND ITMS FACILITIES TO BE INSTALLED BY THE CONTRACTOR. PRIOR TO COMPLETION OF UNDERGROUND FACILITIES THE CONTRACTOR SHALL CONTACT DELDOT'S SIGNAL CONSTRUCTION MANAGER AT 302.222.5920 TEN (10) DAYS PRIOR TO COMPLETION OF FACILITY.
3. ALL PROPOSED ITMS DEVICE TO BE FURNISHED AND INSTALLED, BY DELDOT FORCES. UPON CONTACT BY THE CONTRACTOR DELDOT TRAFFIC FORCES WILL A SCHEDULE OF WHEN WORK CAN BE PERFORMED AVOIDING CONFLICT WITH THE CONTRACTORS WORK.
4. CONTRACTOR SHALL BE RESPONSIBLE FOR ALL INSTALLATION AND REMOVAL OF ALL PROPOSED, TEMPORARY AND EXISTING STRIPING AS REQUIRED. ALL PROPOSED MARKINGS SHALL TIE INTO EXISTING MARKINGS IN ACCORDANCE WITH THE MUTCD AND AS DIRECTED BY THE DELDOT'S CONSTRUCTION ENGINEER.

SIGNING LEGEND	
①	REMOVE EXISTING SIGN
②	EXISTING SIGN TO REMAIN
③	PLACE NEW SIGN
④	RENEW EXISTING SIGN
⑤	REPOSITION EXISTING SIGN

SIGN NOTE:

ALL EXISTING OVERHEAD GUIDE SIGNS TO BE REMOVED UNLESS OTHERWISE NOTED.

PROPOSED CCTV CAMERA, RTMS DETECTOR, POLE, CABINET, CABLE TO BE FURNISHED AND INSTALLED BY DELDOT TRAFFIC FORCES. DEVICES TO COMMUNICATE TO THE TMC VIA FIBER CONNECTION AND BE POWERED VIA POWER FEED LOCATED ALONG ROAD A (SEE SHEET SSC-5).

* QUANTITY REFLECTS CONTINUATION OF PATHWAY SHOWN ON SHEET SSC-4
** QUANTITY REFLECTS CONTINUATION OF PATHWAY SHOWN ON SHEET SSC-5

CONDUIT RUN SCHEDULE

CR*	*OF CON	SIZE	LENGTH	B/T/O	AMOUNT AND TYPE OF CABLE/ WIRE
9	Pathway Information Shown on Sheet SSC-2				
10	1	4"	78'	B	Comm. Cable
11	1	4"	460'	T	Comm. Cable
12	1	2"	145'	T	(2)2/*8 U.F. W/ Ground
13	1	2"	175'	T	(2)2/*8 U.F. W/ Ground
14	1	4"	52'	B	Comm. Cable
15	1	4"	100'	T	Comm. Cable
16	2	2/4"	50'	T	(2)2/*8 U.F. W/ Ground, Comm. Cable
17	1	2.5"	15'	T	Comm. Cable
18	1	2.5"	15'	T	Wavetronix Cable
19	3	2.5"	10'	T	(2)2/*8 U.F. W/ Ground, Comm. Cable
20	1	4"	225'	B	Comm. Cable
21	1	4"	255'	T	Comm. Cable
22	1	4"	240'	T	Comm. Cable

B = BORE, T = TRENCH, O = OPEN CUT.

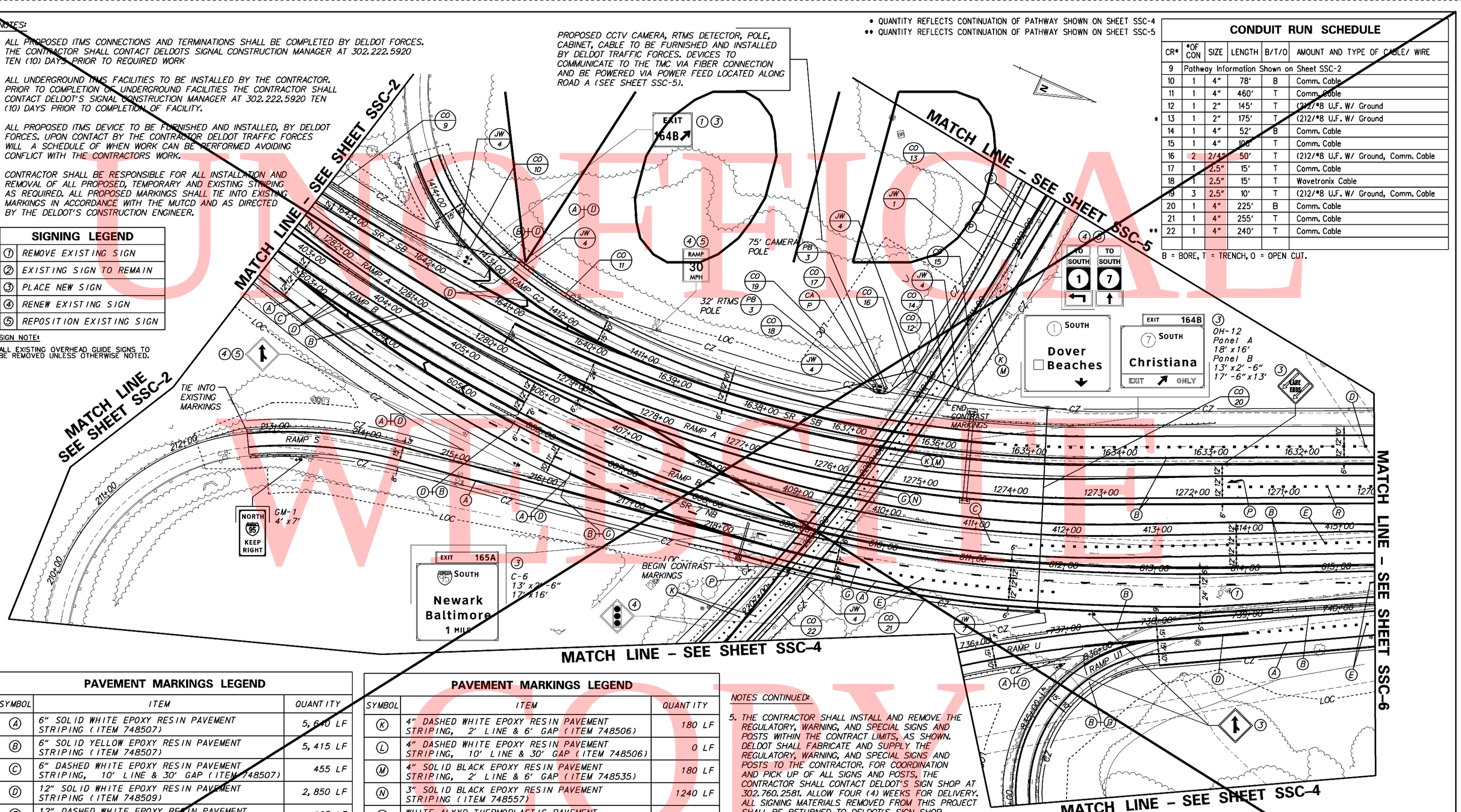

PAVEMENT MARKINGS LEGEND

SYMBOL	ITEM	QUANTITY
Ⓐ	6" SOLID WHITE EPOXY RESIN PAVEMENT STRIPING (ITEM 748507)	5,610 LF
Ⓑ	6" SOLID YELLOW EPOXY RESIN PAVEMENT STRIPING (ITEM 748507)	5,415 LF
Ⓒ	6" DASHED WHITE EPOXY RESIN PAVEMENT STRIPING, 10' LINE & 30' GAP (ITEM 748507)	455 LF
Ⓓ	12" SOLID WHITE EPOXY RESIN PAVEMENT STRIPING (ITEM 748509)	2,850 LF
Ⓔ	12" DASHED WHITE EPOXY RESIN PAVEMENT STRIPING, 3' LINE & 9' GAP (ITEM 748509)	195 LF
Ⓕ	12" SOLID WHITE ALKYD THERMOPLASTIC PAVEMENT STRIPING (ITEM 748027)	80 LF
Ⓖ	4" SOLID WHITE EPOXY RESIN PAVEMENT STRIPING (ITEM 748506)	1,240 LF
Ⓗ	4" SOLID YELLOW EPOXY RESIN PAVEMENT STRIPING (ITEM 748506)	0 LF
Ⓙ	4" SOLID DOUBLE YELLOW EPOXY RESIN PAVEMENT STRIPING (ITEM 748506)	620 LF

PAVEMENT MARKINGS LEGEND

SYMBOL	ITEM	QUANTITY
Ⓚ	4" DASHED WHITE EPOXY RESIN PAVEMENT STRIPING, 2' LINE & 6' GAP (ITEM 748506)	180 LF
Ⓛ	4" DASHED WHITE EPOXY RESIN PAVEMENT STRIPING, 10' LINE & 30' GAP (ITEM 748506)	0 LF
Ⓜ	4" SOLID BLACK EPOXY RESIN PAVEMENT STRIPING, 2' LINE & 6' GAP (ITEM 748535)	180 LF
Ⓝ	3" SOLID BLACK EPOXY RESIN PAVEMENT STRIPING (ITEM 748557)	1240 LF
Ⓟ	WHITE ALKYD THERMOPLASTIC PAVEMENT SYMBOL (ITEM 748015)	42 SF
Ⓡ	6" DASHED WHITE EPOXY RESIN PAVEMENT STRIPING, 3' LINE & 9' GAP (ITEM 748027)	50 LF

NOTES CONTINUED:

5. THE CONTRACTOR SHALL INSTALL AND REMOVE THE REGULATORY, WARNING, AND SPECIAL SIGNS AND POSTS WITHIN THE CONTRACT LIMITS, AS SHOWN. DELDOT SHALL FABRICATE AND SUPPLY THE REGULATORY, WARNING, AND SPECIAL SIGNS AND POSTS TO THE CONTRACTOR. FOR COORDINATION AND PICK UP OF ALL SIGNS AND POSTS, THE CONTRACTOR SHALL CONTACT DELDOT'S SIGN SHOP AT 302.760.2581. ALLOW FOUR (4) WEEKS FOR DELIVERY. ALL SIGNING MATERIALS REMOVED FROM THIS PROJECT SHALL BE RETURNED TO DELDOT'S SIGN SHOP.
6. ALL EXISTING OVERHEAD, , AND BRIDGE MOUNTED SIGNS AND STRUCTURES SHALL BE REMOVED BY THE CONTRACTOR WITHIN THE CONTRACT LIMITS UNLESS OTHERWISE NOTED. THE CONTRACTOR SHALL FURNISH AND INSTALL ALL PROPOSED OVERHEADS AND CANTILEVER SIGN STRUCTURES, FOUNDATIONS, AND SIGNS. THE CONTRACTOR SHALL RETURN ALL SIGNS REMOVED FROM THE PROJECT TO DELDOT'S SIGN SHOP. THE CONTRACTOR SHALL CONTACT DELDOT'S SIGN SHOP AT 302.760.2581 TO ARRANGE FOR DELIVERY OF SIGNS.
7. CONTRACTOR SHALL INSTALL RAISED PAVEMENT MARKERS IN ACCORDANCE WITH THE MUTCD.

UNOFFICIAL WITNESS COPY

DELAWARE DEPARTMENT OF TRANSPORTATION

ADDENDUMS / REVISIONS	
ADDENDUM NO. 2 VOIDED SHEET	
MODIFIED ITMS DESIGN SEE SHEET 713A,	
02/18/2011, JCR	

SCALE 0 50 100 150 FEET

SR1 / I-95 INTERCHANGE

CONTRACT	BRIDGE NO.
28-090-03	DESIGNED BY:
COUNTY	CHECKED BY:
NEW CASTLE	

SIGNING, STRIPING & CONDUIT PLAN

SSC-3

SHEET NO.	TOTAL SHTS.
713	803

2/16/2011 2:59:38 PM
M:\PROJECTS\2003\03059_DELTRPK\SRTMALL\CADD\2809003\PLANS\CP81_SSC_SR1_A03.DGN

NOTES:

1. ALL PROPOSED ITMS CONNECTIONS AND TERMINATIONS SHALL BE COMPLETED BY DELDOT FORCES. THE CONTRACTOR SHALL CONTACT DELDOTS SIGNAL CONSTRUCTION MANAGER AT 302.222.5920 TEN (10) DAYS PRIOR TO REQUIRED WORK
2. ALL UNDERGROUND ITMS FACILITIES TO BE INSTALLED BY THE CONTRACTOR. PRIOR TO COMPLETION OF UNDERGROUND FACILITIES THE CONTRACTOR SHALL CONTACT DELDOT'S SIGNAL CONSTRUCTION MANAGER AT 302.222.5920 TEN (10) DAYS PRIOR TO COMPLETION OF FACILITY.
3. ALL PROPOSED ITMS DEVICE TO BE FURNISHED AND INSTALLED, BY DELDOT FORCES. UPON CONTACT BY THE CONTRACTOR DELDOT TRAFFIC FORCES WILL A SCHEDULE OF WHEN WORK CAN BE PERFORMED AVOIDING CONFLICT WITH THE CONTRACTORS WORK.
4. CONTRACTOR SHALL BE RESPONSIBLE FOR ALL INSTALLATION AND REMOVAL OF ALL PROPOSED, TEMPORARY AND EXISTING STRIPING AS REQUIRED. ALL PROPOSED MARKINGS SHALL TIE INTO EXISTING MARKINGS IN ACCORDANCE WITH THE MUTCD AND AS DIRECTED BY THE DELDOT'S CONSTRUCTION ENGINEER.

SIGNING LEGEND	
①	REMOVE EXISTING SIGN
②	EXISTING SIGN TO REMAIN
③	PLACE NEW SIGN
④	RENEW EXISTING SIGN
⑤	REPOSITION EXISTING SIGN

SIGN NOTE:

ALL EXISTING OVERHEAD GUIDE SIGNS TO BE REMOVED UNLESS OTHERWISE NOTED.

PROPOSED CCTV CAMERA, RTMS DETECTOR, POLE, CABINET, CABLE TO BE FURNISHED AND INSTALLED BY DELDOT TRAFFIC FORCES. DEVICES TO COMMUNICATE TO THE TMC VIA FIBER CONNECTION AND BE POWERED VIA POWER FEED LOCATED ALONG ROAD A (SEE SHEET SSC-5).

* QUANTITY REFLECTS CONTINUATION OF PATHWAY SHOWN ON SHEET SSC-4
** QUANTITY REFLECTS CONTINUATION OF PATHWAY SHOWN ON SHEET SSC-5

CONDUIT RUN SCHEDULE					
CR*	*OF CON	SIZE	LENGTH	B/T/O	AMOUNT AND TYPE OF CABLE/ WIRE
9	Pathway Information Shown on Sheet SSC-2				
10	1	4"	78'	B	Comm. Cable
11	1	4"	460'	T	Comm. Cable
12	1	2"	145'	T	(2)12/#8 U.F. W/ Ground
13	1	2"	175'	T	(2)12/#8 U.F. W/ Ground
14	1	4"	52'	B	Comm. Cable
15	1	4"	100'	T	Comm. Cable
16	2	2/4"	50'	T	(2)12/#8 U.F. W/ Ground, Comm. Cable
17	1	2.5"	15'	T	Comm. Cable
18	1	2.5"	15'	T	Wavetronix Cable
19	3	2.5"	10'	T	(2)12/#8 U.F. W/ Ground, Comm. Cable
20	1	4"	225'	B	Comm. Cable
21	1	4"	255'	T	Comm. Cable
22	1	4"	240'	T	Comm. Cable

B = BORE, T = TRENCH, O = OPEN CUT.

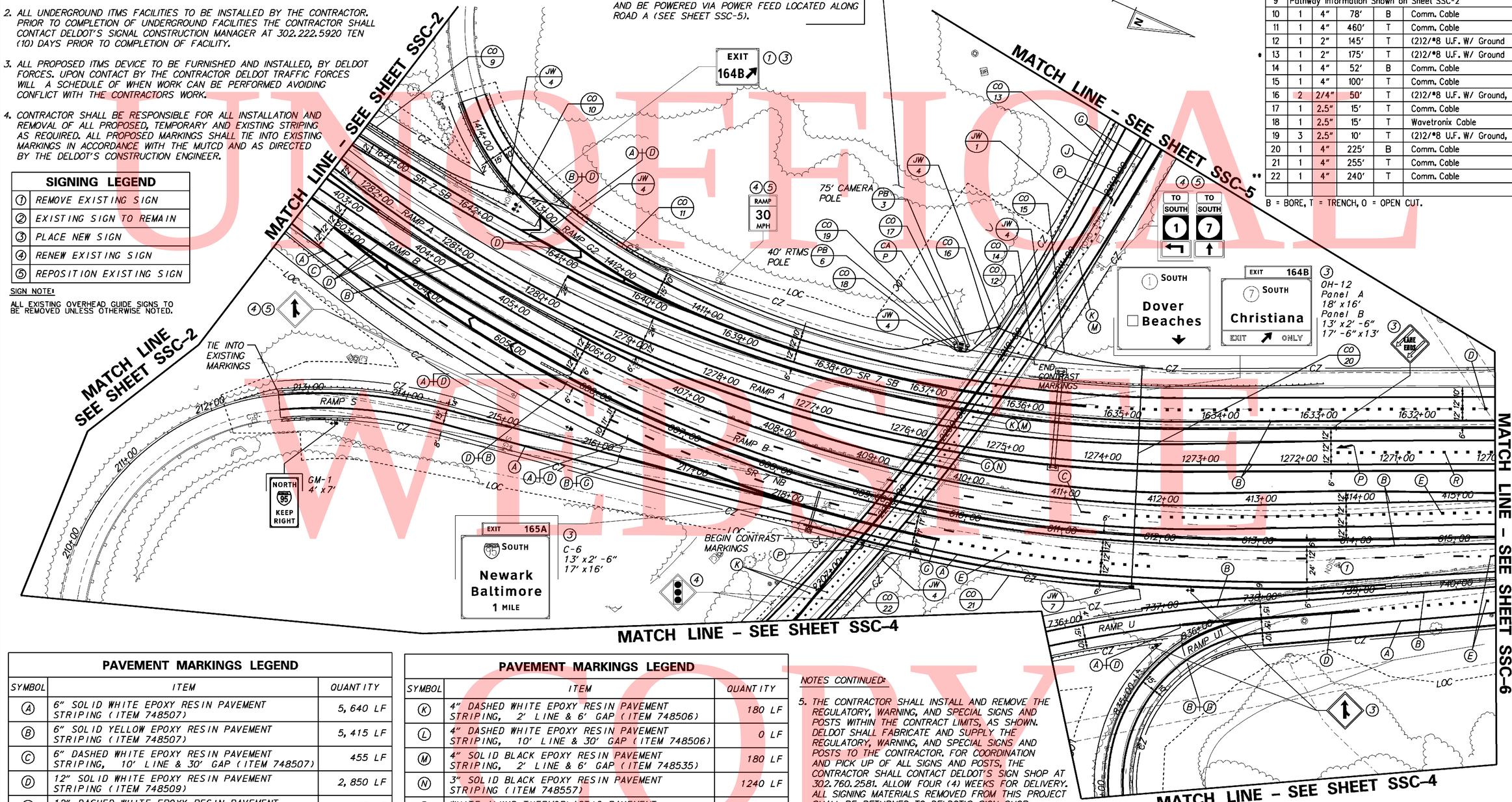

PAVEMENT MARKINGS LEGEND		
SYMBOL	ITEM	QUANTITY
(A)	6" SOLID WHITE EPOXY RESIN PAVEMENT STRIPING (ITEM 748507)	5,640 LF
(B)	6" SOLID YELLOW EPOXY RESIN PAVEMENT STRIPING (ITEM 748507)	5,415 LF
(C)	6" DASHED WHITE EPOXY RESIN PAVEMENT STRIPING, 10' LINE & 30' GAP (ITEM 748507)	455 LF
(D)	12" SOLID WHITE EPOXY RESIN PAVEMENT STRIPING (ITEM 748509)	2,850 LF
(E)	12" DASHED WHITE EPOXY RESIN PAVEMENT STRIPING, 3' LINE & 9' GAP (ITEM 748509)	195 LF
(F)	12" SOLID WHITE ALKYD THERMOPLASTIC PAVEMENT STRIPING (ITEM 748027)	80 LF
(G)	4" SOLID WHITE EPOXY RESIN PAVEMENT STRIPING (ITEM 748506)	1,240 LF
(H)	4" SOLID YELLOW EPOXY RESIN PAVEMENT STRIPING (ITEM 748506)	0 LF
(J)	4" SOLID DOUBLE YELLOW EPOXY RESIN PAVEMENT STRIPING (ITEM 748506)	620 LF

PAVEMENT MARKINGS LEGEND		
SYMBOL	ITEM	QUANTITY
(K)	4" DASHED WHITE EPOXY RESIN PAVEMENT STRIPING, 2' LINE & 6' GAP (ITEM 748506)	180 LF
(L)	4" DASHED WHITE EPOXY RESIN PAVEMENT STRIPING, 10' LINE & 30' GAP (ITEM 748506)	0 LF
(M)	4" SOLID BLACK EPOXY RESIN PAVEMENT STRIPING, 2' LINE & 6' GAP (ITEM 748535)	180 LF
(N)	3" SOLID BLACK EPOXY RESIN PAVEMENT STRIPING (ITEM 748557)	1240 LF
(P)	WHITE ALKYD THERMOPLASTIC PAVEMENT SYMBOL (ITEM 748015)	42 SF
(R)	6" DASHED WHITE EPOXY RESIN PAVEMENT STRIPING, 3' LINE & 9' GAP (ITEM 748507)	50 LF

NOTES CONTINUED:

5. THE CONTRACTOR SHALL INSTALL AND REMOVE THE REGULATORY, WARNING, AND SPECIAL SIGNS AND POSTS WITHIN THE CONTRACT LIMITS, AS SHOWN. DELDOT SHALL FABRICATE AND SUPPLY THE REGULATORY, WARNING, AND SPECIAL SIGNS AND POSTS TO THE CONTRACTOR. FOR COORDINATION AND PICK UP OF ALL SIGNS AND POSTS, THE CONTRACTOR SHALL CONTACT DELDOT'S SIGN SHOP AT 302.760.2581. ALLOW FOUR (4) WEEKS FOR DELIVERY. ALL SIGNING MATERIALS REMOVED FROM THIS PROJECT SHALL BE RETURNED TO DELDOT'S SIGN SHOP.
6. THE EXISTING BRIDGE MOUNTED SIGNS AND STRUCTURES LOCATED ON THE ROAD A BRIDGE IN BOTH THE NORTHBOUND AND SOTHBOUND APPROACH SHALL BE REMOVED BY THE CONTRACTOR. THE CONTRACTOR SHALL FURNISH AND INSTALL ALL PROPOSED OVERHEADS AND CANTILEVER SIGN STRUCTURES, FOUNDATIONS, AND SIGNS. THE CONTRACTOR SHALL RETURN ALL SIGNS REMOVED FROM THE PROJECT TO DELDOT'S SIGN SHOP. THE CONTRACTOR SHALL CONTACT DELDOT'S SIGN SHOP AT 302.760.2581 TO ARRANGE FOR DELIVERY OF SIGNS.
7. CONTRACTOR SHALL INSTALL RAISED PAVEMENT MARKERS IN ACCORDANCE WITH THE MUTCD.

UNOFFICIAL WEBSITE COPY

DELAWARE DEPARTMENT OF TRANSPORTATION

ADDENDUMS / REVISIONS	
ADDENDUM NO. 3 THIS SHEET 713A	
REPLACES VOIDED SHEET 713	
02/18/2011, JCR	

SCALE 0 50 100 150 FEET

SR1 / I-95 INTERCHANGE

CONTRACT	BRIDGE NO.
28-090-03	DESIGNED BY: RK&K
COUNTY	CHECKED BY: JCR
NEW CASTLE	

SIGNING, STRIPING & CONDUIT PLAN

SSC-3	
SHEET NO.	713A
TOTAL SHTS.	803

2/62011 2:47:16 PM
M:\PROJECTS\2003\03069_DELTRNPK\SRIMALL\CADD\2809009\PLANS\CP81_SSC_SR1.DGN

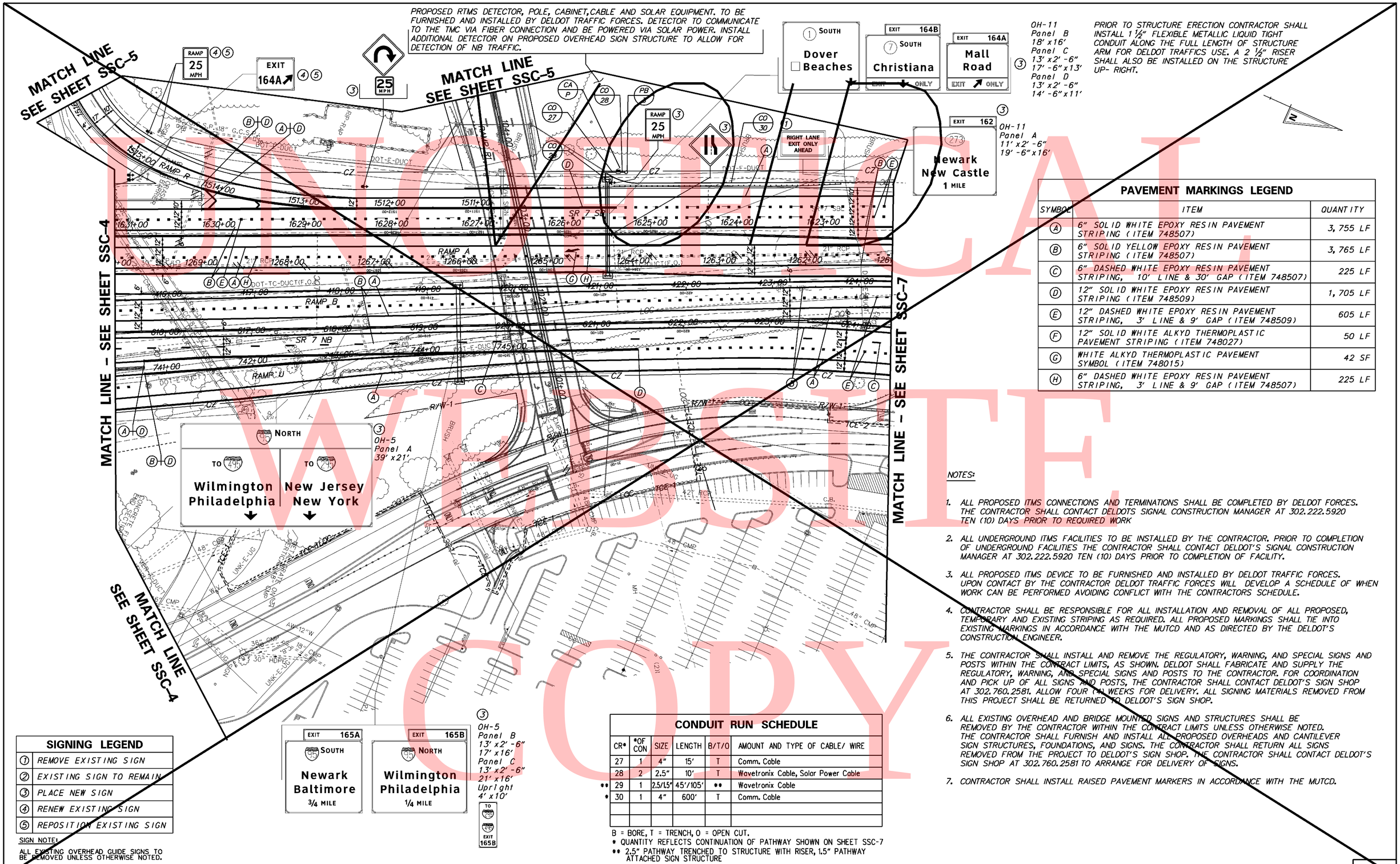

PAVEMENT MARKINGS LEGEND		
SYMBOL	ITEM	QUANTITY
Ⓐ	6" SOLID WHITE EPOXY RESIN PAVEMENT STRIPING (ITEM 748507)	3,755 LF
Ⓑ	6" SOLID YELLOW EPOXY RESIN PAVEMENT STRIPING (ITEM 748507)	3,765 LF
Ⓒ	6" DASHED WHITE EPOXY RESIN PAVEMENT STRIPING, 10' LINE & 30' GAP (ITEM 748507)	225 LF
Ⓓ	12" SOLID WHITE EPOXY RESIN PAVEMENT STRIPING (ITEM 748509)	1,705 LF
Ⓔ	12" DASHED WHITE EPOXY RESIN PAVEMENT STRIPING, 3' LINE & 9' GAP (ITEM 748509)	605 LF
Ⓕ	12" SOLID WHITE ALKYD THERMOPLASTIC PAVEMENT STRIPING (ITEM 748027)	50 LF
Ⓖ	WHITE ALKYD THERMOPLASTIC PAVEMENT SYMBOL (ITEM 748015)	42 SF
Ⓗ	6" DASHED WHITE EPOXY RESIN PAVEMENT STRIPING, 3' LINE & 9' GAP (ITEM 748507)	225 LF

SIGNING LEGEND	
①	REMOVE EXISTING SIGN
②	EXISTING SIGN TO REMAIN
③	PLACE NEW SIGN
④	RENEW EXISTING SIGN
⑤	REPOSITION EXISTING SIGN

SIGN NOTE:
ALL EXISTING OVERHEAD GUIDE SIGNS TO BE REMOVED UNLESS OTHERWISE NOTED.

CONDUIT RUN SCHEDULE					
CR*	*OF CON	SIZE	LENGTH	B/T/O	AMOUNT AND TYPE OF CABLE/ WIRE
27	1	4"	15'	T	Comm. Cable
28	2	2.5"	10'	T	Wavetronix Cable, Solar Power Cable
** 29	1	2.5/1.5"	45'/105'	**	Wavetronix Cable
* 30	1	4"	600'	T	Comm. Cable

B = BORE, T = TRENCH, O = OPEN CUT.
* QUANTITY REFLECTS CONTINUATION OF PATHWAY SHOWN ON SHEET SSC-7
** 2.5" PATHWAY TRENCHED TO STRUCTURE WITH RISER, 1.5" PATHWAY ATTACHED SIGN STRUCTURE

NOTES:

1. ALL PROPOSED ITMS CONNECTIONS AND TERMINATIONS SHALL BE COMPLETED BY DELDOT FORCES. THE CONTRACTOR SHALL CONTACT DELDOTS SIGNAL CONSTRUCTION MANAGER AT 302.222.5920 TEN (10) DAYS PRIOR TO REQUIRED WORK
2. ALL UNDERGROUND ITMS FACILITIES TO BE INSTALLED BY THE CONTRACTOR. PRIOR TO COMPLETION OF UNDERGROUND FACILITIES THE CONTRACTOR SHALL CONTACT DELDOT'S SIGNAL CONSTRUCTION MANAGER AT 302.222.5920 TEN (10) DAYS PRIOR TO COMPLETION OF FACILITY.
3. ALL PROPOSED ITMS DEVICE TO BE FURNISHED AND INSTALLED BY DELDOT TRAFFIC FORCES. UPON CONTACT BY THE CONTRACTOR DELDOT TRAFFIC FORCES WILL DEVELOP A SCHEDULE OF WHEN WORK CAN BE PERFORMED AVOIDING CONFLICT WITH THE CONTRACTORS SCHEDULE.
4. CONTRACTOR SHALL BE RESPONSIBLE FOR ALL INSTALLATION AND REMOVAL OF ALL PROPOSED, TEMPORARY AND EXISTING STRIPING AS REQUIRED. ALL PROPOSED MARKINGS SHALL TIE INTO EXISTING MARKINGS IN ACCORDANCE WITH THE MUTCD AND AS DIRECTED BY THE DELDOT'S CONSTRUCTION ENGINEER.
5. THE CONTRACTOR SHALL INSTALL AND REMOVE THE REGULATORY, WARNING, AND SPECIAL SIGNS AND POSTS WITHIN THE CONTRACT LIMITS, AS SHOWN. DELDOT SHALL FABRICATE AND SUPPLY THE REGULATORY, WARNING, AND SPECIAL SIGNS AND POSTS TO THE CONTRACTOR. FOR COORDINATION AND PICK UP OF ALL SIGNS AND POSTS, THE CONTRACTOR SHALL CONTACT DELDOT'S SIGN SHOP AT 302.760.2581. ALLOW FOUR (4) WEEKS FOR DELIVERY. ALL SIGNING MATERIALS REMOVED FROM THIS PROJECT SHALL BE RETURNED TO DELDOT'S SIGN SHOP.
6. ALL EXISTING OVERHEAD AND BRIDGE MOUNTED SIGNS AND STRUCTURES SHALL BE REMOVED BY THE CONTRACTOR WITHIN THE CONTRACT LIMITS UNLESS OTHERWISE NOTED. THE CONTRACTOR SHALL FURNISH AND INSTALL ALL PROPOSED OVERHEADS AND CANTILEVER SIGN STRUCTURES, FOUNDATIONS, AND SIGNS. THE CONTRACTOR SHALL RETURN ALL SIGNS REMOVED FROM THE PROJECT TO DELDOT'S SIGN SHOP. THE CONTRACTOR SHALL CONTACT DELDOT'S SIGN SHOP AT 302.760.2581 TO ARRANGE FOR DELIVERY OF SIGNS.
7. CONTRACTOR SHALL INSTALL RAISED PAVEMENT MARKERS IN ACCORDANCE WITH THE MUTCD.

UNOFFICIAL WEBSITE COPY

DELAWARE DEPARTMENT OF TRANSPORTATION

ADDENDUMS / REVISIONS	
ADDENDUM NO. 3 VOIDED SHEET	
MODIFIED ITMS DESIGN SEE SHEET 716A,	
02/18/2011, JCR	

SCALE 0 50 100 150 FEET

SR1 / I-95 INTERCHANGE

CONTRACT	BRIDGE NO.
28-090-03	DESIGNED BY:
COUNTY	CHECKED BY:
NEW CASTLE	

SIGNING, STRIPING & CONDUIT PLAN

SSC-6

SHEET NO.	TOTAL SHTS.
716	803

PROPOSED RTMS DETECTOR, POLE, CABINET, CABLE AND SOLAR EQUIPMENT. TO BE FURNISHED AND INSTALLED BY DELDOT TRAFFIC FORCES. DETECTOR TO COMMUNICATE TO THE TMC VIA FIBER CONNECTION AND BE POWERED VIA SOLAR POWER. INSTALL ADDITIONAL DETECTOR ON PROPOSED OVERHEAD SIGN STRUCTURE TO ALLOW FOR DETECTION OF NB TRAFFIC.

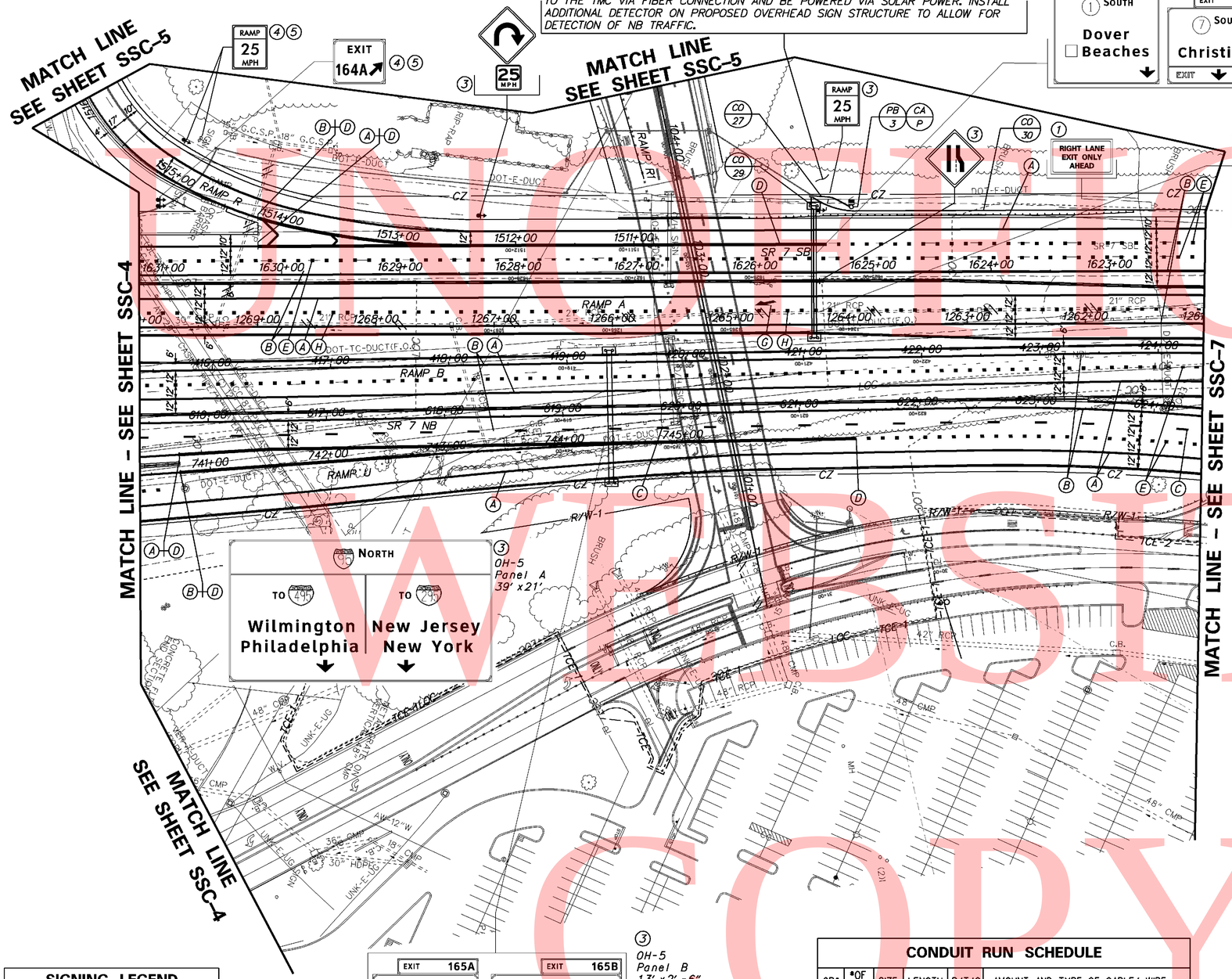

PRIOR TO STRUCTURE ERECTION CONTRACTOR SHALL INSTALL 1 ½" FLEXIBLE METALLIC LIQUID TIGHT CONDUIT ALONG THE FULL LENGTH OF STRUCTURE ARM FOR DELDOT TRAFFICS USE. A 2 ½" RISER SHALL ALSO BE INSTALLED ON THE STRUCTURE UP- RIGHT.

PAVEMENT MARKINGS LEGEND

SYMBOL	ITEM	QUANTITY
(A)	6" SOLID WHITE EPOXY RESIN PAVEMENT STRIPING (ITEM 748507)	3,755 LF
(B)	6" SOLID YELLOW EPOXY RESIN PAVEMENT STRIPING (ITEM 748507)	3,765 LF
(C)	6" DASHED WHITE EPOXY RESIN PAVEMENT STRIPING, 10' LINE & 30' GAP (ITEM 748507)	225 LF
(D)	12" SOLID WHITE EPOXY RESIN PAVEMENT STRIPING (ITEM 748509)	1,705 LF
(E)	12" DASHED WHITE EPOXY RESIN PAVEMENT STRIPING, 3' LINE & 9' GAP (ITEM 748509)	605 LF
(F)	12" SOLID WHITE ALKYD THERMOPLASTIC PAVEMENT STRIPING (ITEM 748027)	50 LF
(G)	WHITE ALKYD THERMOPLASTIC PAVEMENT SYMBOL (ITEM 748015)	42 SF
(H)	6" DASHED WHITE EPOXY RESIN PAVEMENT STRIPING, 3' LINE & 9' GAP (ITEM 748507)	225 LF

SIGNING LEGEND

(1)	REMOVE EXISTING SIGN
(2)	EXISTING SIGN TO REMAIN
(3)	PLACE NEW SIGN
(4)	RENEW EXISTING SIGN
(5)	REPOSITION EXISTING SIGN

SIGN NOTE:

ALL EXISTING OVERHEAD GUIDE SIGNS TO BE REMOVED UNLESS OTHERWISE NOTED.

CONDUIT RUN SCHEDULE

	CR*	*OF CON	SIZE	LENGTH	B/T/O	AMOUNT AND TYPE OF CABLE/ WIRE
	27	2	2.5"	45'	T	Comm. Cable
	28					
**	29	1	2.5/1.5"	45'/105'	**	Wavetronix Cable
*	30	1	4"	600'	T	Comm. Cable

B = BORE, T = TRENCH, O = OPEN CUT.
* QUANTITY REFLECTS CONTINUATION OF PATHWAY SHOWN ON SHEET SSC-7
** 2.5" PATHWAY TRENCHED TO STRUCTURE WITH RISER, 1.5" PATHWAY ATTACHED SIGN STRUCTURE

NOTES:

1. ALL PROPOSED ITMS CONNECTIONS AND TERMINATIONS SHALL BE COMPLETED BY DELDOT FORCES. THE CONTRACTOR SHALL CONTACT DELDOTS SIGNAL CONSTRUCTION MANAGER AT 302.222.5920 TEN (10) DAYS PRIOR TO REQUIRED WORK
2. ALL UNDERGROUND ITMS FACILITIES TO BE INSTALLED BY THE CONTRACTOR. PRIOR TO COMPLETION OF UNDERGROUND FACILITIES THE CONTRACTOR SHALL CONTACT DELDOT'S SIGNAL CONSTRUCTION MANAGER AT 302.222.5920 TEN (10) DAYS PRIOR TO COMPLETION OF FACILITY.
3. ALL PROPOSED ITMS DEVICE TO BE FURNISHED AND INSTALLED BY DELDOT TRAFFIC FORCES. UPON CONTACT BY THE CONTRACTOR DELDOT TRAFFIC FORCES WILL DEVELOP A SCHEDULE OF WHEN WORK CAN BE PERFORMED AVOIDING CONFLICT WITH THE CONTRACTORS SCHEDULE.
4. CONTRACTOR SHALL BE RESPONSIBLE FOR ALL INSTALLATION AND REMOVAL OF ALL PROPOSED, TEMPORARY AND EXISTING STRIPING AS REQUIRED. ALL PROPOSED MARKINGS SHALL TIE INTO EXISTING MARKINGS IN ACCORDANCE WITH THE MUTCD AND AS DIRECTED BY THE DELDOT'S CONSTRUCTION ENGINEER.
5. THE CONTRACTOR SHALL INSTALL AND REMOVE THE REGULATORY, WARNING, AND SPECIAL SIGNS AND POSTS WITHIN THE CONTRACT LIMITS, AS SHOWN. DELDOT SHALL FABRICATE AND SUPPLY THE REGULATORY, WARNING, AND SPECIAL SIGNS AND POSTS TO THE CONTRACTOR. FOR COORDINATION AND PICK UP OF ALL SIGNS AND POSTS, THE CONTRACTOR SHALL CONTACT DELDOT'S SIGN SHOP AT 302.760.2581. ALLOW FOUR (4) WEEKS FOR DELIVERY. ALL SIGNING MATERIALS REMOVED FROM THIS PROJECT SHALL BE RETURNED TO DELDOT'S SIGN SHOP.
6. ALL EXISTING OVERHEAD AND BRIDGE MOUNTED SIGNS AND STRUCTURES SHALL BE REMOVED BY THE CONTRACTOR WITHIN THE CONTRACT LIMITS UNLESS OTHERWISE NOTED. THE CONTRACTOR SHALL FURNISH AND INSTALL ALL PROPOSED OVERHEADS AND CANTILEVER SIGN STRUCTURES, FOUNDATIONS, AND SIGNS. THE CONTRACTOR SHALL RETURN ALL SIGNS REMOVED FROM THE PROJECT TO DELDOT'S SIGN SHOP. THE CONTRACTOR SHALL CONTACT DELDOT'S SIGN SHOP AT 302.760.2581 TO ARRANGE FOR DELIVERY OF SIGNS.
7. CONTRACTOR SHALL INSTALL RAISED PAVEMENT MARKERS IN ACCORDANCE WITH THE MUTCD.

UNOFFICIAL WEBSITE COPY

M:\PROJECTS\59_DELTRNPK\SR1MALL\CADD\2809003\PLANS\CP84_SCC_SR1.DGN

DELAWARE DEPARTMENT OF TRANSPORTATION

ADDENDUMS / REVISIONS	
ADDENDUM NO. 3 THIS SHEET 716A	
REPLACES VOIDED SHEET 716	
02/18/2011, JCR	

SCALE 0 50 100 150 FEET

SR1 / I-95 INTERCHANGE

CONTRACT	BRIDGE NO.
28-090-03	
COUNTY	DESIGNED BY: RK&K
NEW CASTLE	CHECKED BY: JCR

SIGNING, STRIPING & CONDUIT PLAN

SSC-6

SHEET NO.	TOTAL SHTS.
716A	803

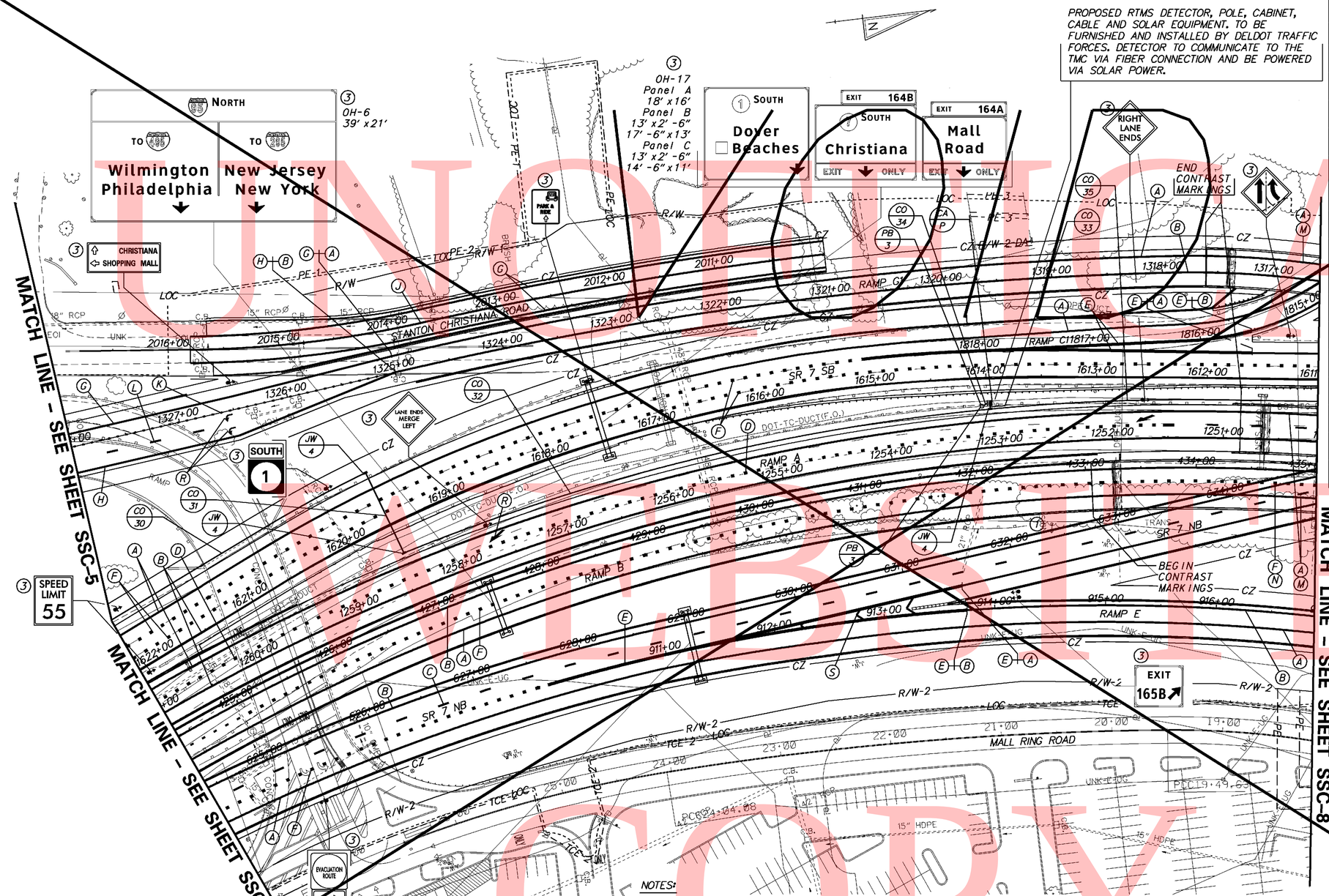

PROPOSED RTMS DETECTOR, POLE, CABINET, CABLE AND SOLAR EQUIPMENT. TO BE FURNISHED AND INSTALLED BY DELDOT TRAFFIC FORCES. DETECTOR TO COMMUNICATE TO THE TMC VIA FIBER CONNECTION AND BE POWERED VIA SOLAR POWER.

PAVEMENT MARKINGS LEGEND

SYMBOL	ITEM	QUANTITY
(A)	6" SOLID WHITE EPOXY RESIN PAVEMENT STRIPING (ITEM 748507)	5,545 LF
(B)	6" SOLID YELLOW EPOXY RESIN PAVEMENT STRIPING (ITEM 748507)	5,560 LF
(C)	6" DASHED WHITE EPOXY RESIN PAVEMENT STRIPING, 10' LINE & 30' GAP (ITEM 748507)	290 LF
(D)	6" DASHED WHITE EPOXY RESIN PAVEMENT STRIPING, 3' LINE & 9' GAP (ITEM 748507)	250 LF
(E)	12" SOLID WHITE EPOXY RESIN PAVEMENT STRIPING (ITEM 748509)	1,260 LF
(F)	12" DASHED WHITE EPOXY RESIN PAVEMENT STRIPING, 3' LINE & 9' GAP (ITEM 748509)	810 LF
(G)	4" SOLID WHITE EPOXY RESIN PAVEMENT STRIPING (ITEM 748506)	1,465 LF
(M)	4" SOLID YELLOW EPOXY RESIN PAVEMENT STRIPING (ITEM 748506)	300 LF
(J)	4" SOLID DOUBLE YELLOW EPOXY RESIN PAVEMENT STRIPING (ITEM 748506)	580 LF
(K)	4" DASHED WHITE EPOXY RESIN PAVEMENT STRIPING, 2' LINE & 6' GAP (ITEM 748506)	75 LF
(L)	4" DASHED WHITE EPOXY RESIN PAVEMENT STRIPING, 10' LINE & 30' GAP (ITEM 748506)	30 LF
(M)	3" SOLID BLACK EPOXY RESIN PAVEMENT STRIPING (ITEM 748557)	325 LF
(N)	12" SOLID BLACK EPOXY RESIN PAVEMENT STRIPING, 3' LINE & 9' GAP (ITEM 748539)	50 LF
(P)	9" RETROREFLECTIVE PREFORMED PATTERNED CONTRAST MARKING, 10' LINE & 30' GAP (ITEM 748547)	10 LF
(R)	WHITE ALKYD THERMOPLASTIC PAVEMENT SYMBOL (ITEM 748015)	115 SF
(S)	12" SOLID WHITE ALKYD THERMOPLASTIC PAVEMENT STRIPING (ITEM 748027)	60 LF

CONDUIT RUN SCHEDULE

CR*	*OF CON	SIZE	LENGTH	B/T/O	AMOUNT AND TYPE OF CABLE/ WIRE
30	Pathway Information Shown on Sheet SSC-6				
31	1	4"	82'	B	Comm. Cable
32	1	4"	550'	T	Comm. Cable
33	3	2.5"	10'	T	Wavetronix Cable, Solar Power
34	1	2.5"	10'	T	Wavetronix Cable
* 35	1	4"	400'	T	Comm. Cable

B = BORE, T = TRENCH, O = OPEN CUT.
* QUANTITY REFLECTS CONTINUATION OF PATHWAY SHOWN ON SHEET SSC-8

SIGNING LEGEND

(1)	REMOVE EXISTING SIGN
(2)	EXISTING SIGN TO REMAIN
(3)	PLACE NEW SIGN
(4)	RENEW EXISTING SIGN
(5)	REPOSITION EXISTING SIGN

SIGN NOTE:

ALL EXISTING OVERHEAD GUIDE SIGNS TO BE REMOVED UNLESS OTHERWISE NOTED.

ALL EXISTING REGULATORY, WARNING, AND SPECIAL SIGNS ASSUMED TO BE REMOVED UNLESS OTHERWISE NOTED.

NOTES:

1. ALL PROPOSED ITMS CONNECTIONS AND TERMINATIONS SHALL BE COMPLETED BY DELDOT FORCES. THE CONTRACTOR SHALL CONTACT DELDOTS SIGNAL CONSTRUCTION MANAGER AT 302.222.5920 TEN (10) DAYS PRIOR TO REQUIRED WORK
2. ALL UNDERGROUND ITMS FACILITIES TO BE INSTALLED BY THE CONTRACTOR. PRIOR TO COMPLETION OF UNDERGROUND FACILITIES THE CONTRACTOR SHALL CONTACT DELDOT'S SIGNAL CONSTRUCTION MANAGER AT 302.222.5920 TEN (10) DAYS PRIOR TO COMPLETION OF FACILITY.
3. ALL PROPOSED ITMS DEVICE TO BE FURNISHED AND INSTALLED, BY DELDOT TRAFFIC FORCES. UPON CONTACT BY THE CONTRACTOR DELDOT TRAFFIC FORCES WILL DEVELOP A SCHEDULE OF WHEN WORK CAN BE PERFORMED AVOIDING CONFLICT WITH THE CONTRACTORS SCHEDULE.
4. CONTRACTOR SHALL BE RESPONSIBLE FOR ALL INSTALLATION AND REMOVAL OF ALL PROPOSED, TEMPORARY AND EXISTING STRIPING AS REQUIRED. ALL PROPOSED MARKINGS SHALL TIE INTO EXISTING MARKINGS IN ACCORDANCE WITH THE MUTCD AND AS DIRECTED BY THE DELDOT'S CONSTRUCTION ENGINEER.
5. THE CONTRACTOR SHALL INSTALL AND REMOVE THE REGULATORY, WARNING, AND SPECIAL SIGNS AND POSTS WITHIN THE CONTRACT LIMITS, AS SHOWN. DELDOT SHALL FABRICATE AND SUPPLY THE REGULATORY, WARNING, AND SPECIAL SIGNS AND POSTS TO THE CONTRACTOR. FOR COORDINATION AND PICK UP OF ALL SIGNS AND POSTS, THE CONTRACTOR SHALL CONTACT DELDOT'S SIGN SHOP AT 302.760.2581. ALLOW FOUR (4) WEEKS FOR DELIVERY. ALL SIGNING MATERIALS REMOVED FROM THIS PROJECT SHALL BE RETURNED TO DELDOT'S SIGN SHOP.
6. ALL EXISTING OVERHEAD AND BRIDGE MOUNTED SIGNS AND STRUCTURES SHALL BE REMOVED BY THE CONTRACTOR WITHIN THE CONTRACT LIMITS UNLESS OTHERWISE NOTED. THE CONTRACTOR SHALL FURNISH AND INSTALL ALL PROPOSED OVERHEADS AND CANTILEVER SIGN STRUCTURES, FOUNDATIONS, AND SIGNS. THE CONTRACTOR SHALL RETURN ALL SIGNS REMOVED FROM THE PROJECT TO DELDOT'S SIGN SHOP. THE CONTRACTOR SHALL CONTACT DELDOT'S SIGN SHOP AT 302.760.2581 TO ARRANGE FOR DELIVERY OF SIGNS.
7. CONTRACTOR SHALL INSTALL RAISED PAVEMENT MARKERS IN ACCORDANCE WITH THE MUTCD.

UNOFFICIAL WORKING COPY

DELAWARE DEPARTMENT OF TRANSPORTATION

ADDENDUMS / REVISIONS
ADDENDUM NO. 3 VOIDED SHEET 717
MODIFIED ITMS DESIGN SEE SHEET 717A, 02/18/2011, JCR

SCALE 0 50 100 150 FEET

SR1 / I-95 INTERCHANGE

CONTRACT 28-090-03
COUNTY NEW CASTLE
BRIDGE NO.
DESIGNED BY:
CHECKED BY:

SIGNING, STRIPING & CONDUIT PLAN

SSC-7
SHEET NO. 717
TOTAL SHTS. 803

6/24/2009 1:51:40 PM
M:\PROJECTS\2003\03059_DELTRN\SRMALL\CADD\28090003\PLANS\CP85_SSC_SR1_ADJ.DGN

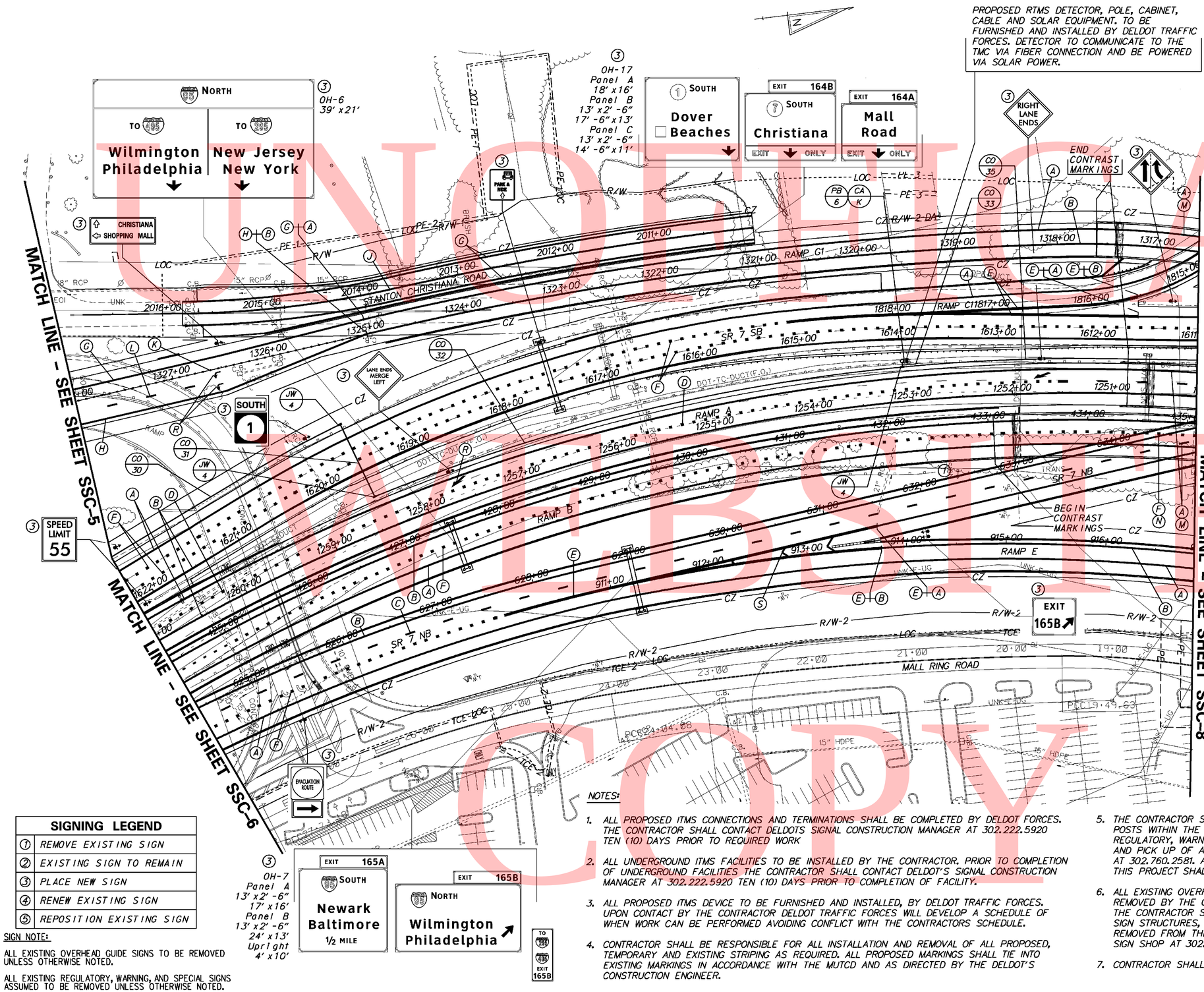

PROPOSED RTMS DETECTOR, POLE, CABINET, CABLE AND SOLAR EQUIPMENT. TO BE FURNISHED AND INSTALLED BY DELDOT TRAFFIC FORCES. DETECTOR TO COMMUNICATE TO THE TMC VIA FIBER CONNECTION AND BE POWERED VIA SOLAR POWER.

PAVEMENT MARKINGS LEGEND

SYMBOL	ITEM	QUANTITY
(A)	6" SOLID WHITE EPOXY RESIN PAVEMENT STRIPING (ITEM 748507)	5,545 LF
(B)	6" SOLID YELLOW EPOXY RESIN PAVEMENT STRIPING (ITEM 748507)	5,560 LF
(C)	6" DASHED WHITE EPOXY RESIN PAVEMENT STRIPING, 10' LINE & 30' GAP (ITEM 748507)	290 LF
(D)	6" DASHED WHITE EPOXY RESIN PAVEMENT STRIPING, 3' LINE & 9' GAP (ITEM 748507)	250 LF
(E)	12" SOLID WHITE EPOXY RESIN PAVEMENT STRIPING (ITEM 748509)	1,260 LF
(F)	12" DASHED WHITE EPOXY RESIN PAVEMENT STRIPING, 3' LINE & 9' GAP (ITEM 748509)	810 LF
(G)	4" SOLID WHITE EPOXY RESIN PAVEMENT STRIPING (ITEM 748506)	1,465 LF
(H)	4" SOLID YELLOW EPOXY RESIN PAVEMENT STRIPING (ITEM 748506)	300 LF
(J)	4" SOLID DOUBLE YELLOW EPOXY RESIN PAVEMENT STRIPING (ITEM 748506)	580 LF
(K)	4" DASHED WHITE EPOXY RESIN PAVEMENT STRIPING, 2' LINE & 6' GAP (ITEM 748506)	75 LF
(L)	4" DASHED WHITE EPOXY RESIN PAVEMENT STRIPING, 10' LINE & 30' GAP (ITEM 748506)	30 LF
(M)	3" SOLID BLACK EPOXY RESIN PAVEMENT STRIPING (ITEM 748557)	325 LF
(N)	12" SOLID BLACK EPOXY RESIN PAVEMENT STRIPING, 3' LINE & 9' GAP (ITEM 748539)	50 LF
(P)	9" RETROREFLECTIVE PREFORMED PATTERNED CONTRAST MARKING, 10' LINE & 30' GAP (ITEM 748547)	10 LF
(R)	WHITE ALKYD THERMOPLASTIC PAVEMENT SYMBOL (ITEM 748015)	115 SF
(S)	12" SOLID WHITE ALKYD THERMOPLASTIC PAVEMENT STRIPING (ITEM 748027)	60 LF

CONDUIT RUN SCHEDULE

CR*	*OF CON	SIZE	LENGTH	B/T/O	AMOUNT AND TYPE OF CABLE/ WIRE
30	Pathway Information Shown on Sheet SSC-6				
31	1	4"	82'	B	Comm. Cable
32	1	4"	550'	T	Comm. Cable
33	2	2.5"	10'	T	Comm. Cable
34					
* 35	1	4"	400'	T	Comm. Cable

B = BORE, T = TRENCH, O = OPEN CUT.
* QUANTITY REFLECTS CONTINUATION OF PATHWAY SHOWN ON SHEET SSC-8

SIGNING LEGEND

(1)	REMOVE EXISTING SIGN
(2)	EXISTING SIGN TO REMAIN
(3)	PLACE NEW SIGN
(4)	RENEW EXISTING SIGN
(5)	REPOSITION EXISTING SIGN

SIGN NOTE:

ALL EXISTING OVERHEAD GUIDE SIGNS TO BE REMOVED UNLESS OTHERWISE NOTED.

ALL EXISTING REGULATORY, WARNING, AND SPECIAL SIGNS ASSUMED TO BE REMOVED UNLESS OTHERWISE NOTED.

NOTES:

1. ALL PROPOSED ITMS CONNECTIONS AND TERMINATIONS SHALL BE COMPLETED BY DELDOT FORCES. THE CONTRACTOR SHALL CONTACT DELDOTS SIGNAL CONSTRUCTION MANAGER AT 302.222.5920 TEN (10) DAYS PRIOR TO REQUIRED WORK
2. ALL UNDERGROUND ITMS FACILITIES TO BE INSTALLED BY THE CONTRACTOR. PRIOR TO COMPLETION OF UNDERGROUND FACILITIES THE CONTRACTOR SHALL CONTACT DELDOT'S SIGNAL CONSTRUCTION MANAGER AT 302.222.5920 TEN (10) DAYS PRIOR TO COMPLETION OF FACILITY.
3. ALL PROPOSED ITMS DEVICE TO BE FURNISHED AND INSTALLED, BY DELDOT TRAFFIC FORCES. UPON CONTACT BY THE CONTRACTOR DELDOT TRAFFIC FORCES WILL DEVELOP A SCHEDULE OF WHEN WORK CAN BE PERFORMED AVOIDING CONFLICT WITH THE CONTRACTORS SCHEDULE.
4. CONTRACTOR SHALL BE RESPONSIBLE FOR ALL INSTALLATION AND REMOVAL OF ALL PROPOSED, TEMPORARY AND EXISTING STRIPING AS REQUIRED. ALL PROPOSED MARKINGS SHALL TIE INTO EXISTING MARKINGS IN ACCORDANCE WITH THE MUTCD AND AS DIRECTED BY THE DELDOT'S CONSTRUCTION ENGINEER.
5. THE CONTRACTOR SHALL INSTALL AND REMOVE THE REGULATORY, WARNING, AND SPECIAL SIGNS AND POSTS WITHIN THE CONTRACT LIMITS, AS SHOWN. DELDOT SHALL FABRICATE AND SUPPLY THE REGULATORY, WARNING, AND SPECIAL SIGNS AND POSTS TO THE CONTRACTOR. FOR COORDINATION AND PICK UP OF ALL SIGNS AND POSTS, THE CONTRACTOR SHALL CONTACT DELDOT'S SIGN SHOP AT 302.760.2581. ALLOW FOUR (4) WEEKS FOR DELIVERY. ALL SIGNING MATERIALS REMOVED FROM THIS PROJECT SHALL BE RETURNED TO DELDOT'S SIGN SHOP.
6. ALL EXISTING OVERHEAD AND BRIDGE MOUNTED SIGNS AND STRUCTURES SHALL BE REMOVED BY THE CONTRACTOR WITHIN THE CONTRACT LIMITS UNLESS OTHERWISE NOTED. THE CONTRACTOR SHALL FURNISH AND INSTALL ALL PROPOSED OVERHEADS AND CANTILEVER SIGN STRUCTURES, FOUNDATIONS, AND SIGNS. THE CONTRACTOR SHALL RETURN ALL SIGNS REMOVED FROM THE PROJECT TO DELDOT'S SIGN SHOP. THE CONTRACTOR SHALL CONTACT DELDOT'S SIGN SHOP AT 302.760.2581 TO ARRANGE FOR DELIVERY OF SIGNS.
7. CONTRACTOR SHALL INSTALL RAISED PAVEMENT MARKERS IN ACCORDANCE WITH THE MUTCD.

UNOFFICIAL WORKSHOP COPY

SSC-7

DELAWARE DEPARTMENT OF TRANSPORTATION

ADDENDUMS / REVISIONS
ADDENDUM NO. 3 THIS SHEET 717A
REPLACES VOIDED SHEET 717
02/18/2011, JCR

SCALE 0 50 100 150 FEET

SR1 / I-95 INTERCHANGE

CONTRACT 28-090-03
COUNTY NEW CASTLE
BRIDGE NO.
DESIGNED BY: RK&K
CHECKED BY: JCR

SIGNING, STRIPING & CONDUIT PLAN

SHEET NO. 717A
TOTAL SHTS. 803

6/24/2009 1:51:40 PM
M:\PROJECTS\2003\03059_DEL TRNPK\SR1MALL\CADD\28090003\PLANS\CP85_SSC_SR1.DGN

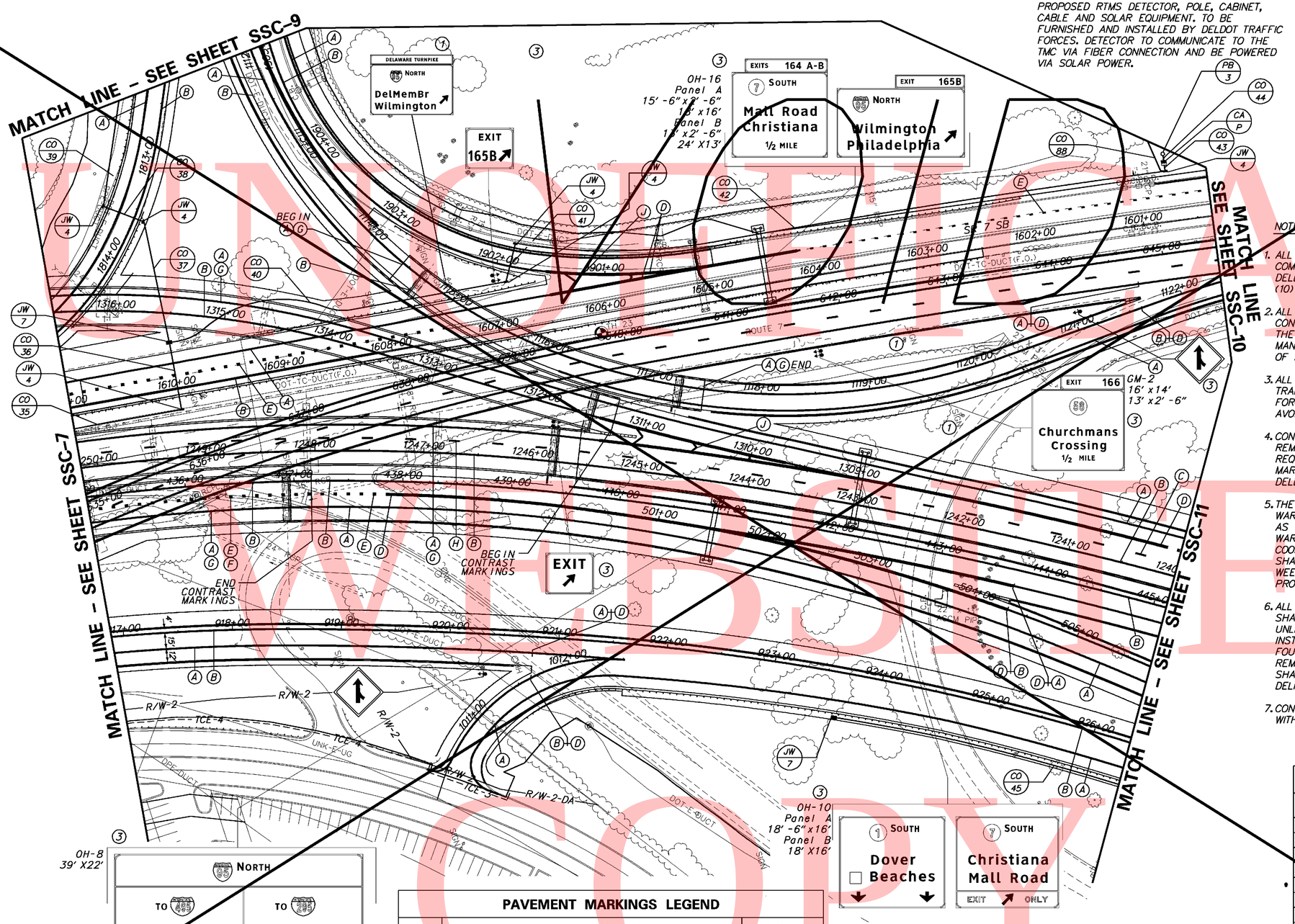

SIGNING LEGEND

①	REMOVE EXISTING SIGN
②	EXISTING SIGN TO REMAIN
③	PLACE NEW SIGN
④	RENEW EXISTING SIGN
⑤	REPOSITION EXISTING SIGN

SIGN NOTE:

ALL EXISTING OVERHEAD GUIDE SIGNS TO BE REMOVED UNLESS OTHERWISE NOTED.

ALL EXISTING REGULATORY, WARNING, AND SPECIAL SIGNS ASSUMED TO BE REMOVED UNLESS OTHERWISE NOTED.

NOTES:

1. ALL PROPOSED ITMS CONNECTIONS AND TERMINATIONS SHALL BE COMPLETED BY DELDOT FORCES. THE CONTRACTOR SHALL CONTACT DELDOTS SIGNAL CONSTRUCTION MANAGER AT 302.222.5920 TEN (10) DAYS PRIOR TO REQUIRED WORK
2. ALL UNDERGROUND ITMS FACILITIES TO BE INSTALLED BY THE CONTRACTOR. PRIOR TO COMPLETION OF UNDERGROUND FACILITIES THE CONTRACTOR SHALL CONTACT DELDOT'S SIGNAL CONSTRUCTION MANAGER AT 302.222.5920 TEN (10) DAYS PRIOR TO COMPLETION OF FACILITY.
3. ALL PROPOSED ITMS DEVICE TO BE FURNISHED AND INSTALLED BY DELDOT TRAFFIC FORCES. UPON CONTACT BY THE CONTRACTOR DELDOT TRAFFIC FORCES WILL DEVELOP A SCHEDULE OF WHEN WORK CAN BE PERFORMED AVOIDING CONFLICT WITH THE CONTRACTORS SCHEDULE.
4. CONTRACTOR SHALL BE RESPONSIBLE FOR ALL INSTALLATION AND REMOVAL OF ALL PROPOSED, TEMPORARY AND EXISTING STRIPING AS REQUIRED. ALL PROPOSED MARKINGS SHALL TIE INTO EXISTING MARKINGS IN ACCORDANCE WITH THE MUTCD AND AS DIRECTED BY DELDOT'S CONSTRUCTION ENGINEER.
5. THE CONTRACTOR SHALL INSTALL AND REMOVE THE REGULATORY, WARNING, AND SPECIAL SIGNS AND POSTS WITHIN THE CONTRACT LIMITS, AS SHOWN. DELDOT SHALL FABRICATE AND SUPPLY THE REGULATORY, WARNING, AND SPECIAL SIGNS AND POSTS TO THE CONTRACTOR. FOR COORDINATION AND PICK UP OF ALL SIGNS AND POSTS, THE CONTRACTOR SHALL CONTACT DELDOT'S SIGN SHOP AT 302.760.2581. ALLOW FOUR (4) WEEKS FOR DELIVERY. ALL SIGNING MATERIALS REMOVED FROM THIS PROJECT SHALL BE RETURNED TO DELDOT'S SIGN SHOP.
6. ALL EXISTING OVERHEAD AND BRIDGE MOUNTED SIGNS AND STRUCTURES SHALL BE REMOVED BY THE CONTRACTOR WITHIN THE CONTRACT LIMITS UNLESS OTHERWISE NOTED. THE CONTRACTOR SHALL FURNISH AND INSTALL ALL PROPOSED OVERHEADS AND CANTILEVER SIGN STRUCTURES, FOUNDATIONS, AND SIGNS. THE CONTRACTOR SHALL RETURN ALL SIGNS REMOVED FROM THE PROJECT TO DELDOT'S SIGN SHOP. THE CONTRACTOR SHALL CONTACT DELDOT'S SIGN SHOP AT 302.760.2581 TO ARRANGE FOR DELIVERY OF SIGNS.
7. CONTRACTOR SHALL INSTALL RAISED PAVEMENT MARKERS IN ACCORDANCE WITH THE MUTCD.

PAVEMENT MARKINGS LEGEND

SYMBOL	ITEM	QUANTITY
(A)	6" SOLID WHITE EPOXY RESIN PAVEMENT STRIPING (ITEM 748507)	7040 LF
(B)	6" SOLID YELLOW EPOXY RESIN PAVEMENT STRIPING (ITEM 748507)	7,650 LF
(C)	6" DASHED WHITE EPOXY RESIN PAVEMENT STRIPING, 10' LINE & 30' GAP (ITEM 748507)	410 LF
(D)	12" SOLID WHITE EPOXY RESIN PAVEMENT STRIPING (ITEM 748509)	2, 390 LF
(E)	12" DASHED WHITE EPOXY RESIN PAVEMENT STRIPING, 3' LINE & 9' GAP (ITEM 748509)	255 LF

PAVEMENT MARKINGS LEGEND

SYMBOL	ITEM	QUANTITY
(F)	12" SOLID BLACK EPOXY RESIN PAVEMENT STRIPING, 3' LINE & 9' GAP (ITEM 748539)	70 LF
(G)	3" SOLID BLACK EPOXY RESIN PAVEMENT STRIPING (ITEM 748557)	1485 LF
(H)	9" RETROREFLECTIVE PREFORMED PATTERNED CONTRAST MARKING, 10' LINE & 30' GAP (ITEM 748547)	115 LF
(J)	12" SOLID WHITE ALKYD THERMOPLASTIC PAVEMENT STRIPING (ITEM 748027)	120 LF

CONDUIT RUN SCHEDULE

	CR*	*OF CON	SIZE	LENGTH	B/T/O	AMOUNT AND TYPE OF CABLE/ WIRE
	35	Pathway Information Shown on Sheet SSC-7				
	36	1	4"	65'	B	Comm. Cable
	37	1	4"	120'	T	Comm. Cable
	38	1	4"	40'	B	Comm. Cable
*	39	1	4"	600'	T	Comm. Cable
	40	1	4"	310'	T	Comm. Cable
	41	1	4"	35'	B	Comm. Cable
	42	1	4"	600	T	Comm. Cable
	43	3	2.5"	10'	T	Comm. Cable
	44	2	2.5"	10'	T	Wavetronix Cable, Solar Power Cable
**	45	1	4"	600'	T	Empty
***	88	1	4"	225'	T	Comm. Cable

B = BORE, T = TRENCH, O = OPEN CUT.
* QUANTITY REFLECTS CONTINUATION OF PATHWAY SHOWN ON SHEET SSC-9
** QUANTITY REFLECTS CONTINUATION OF PATHWAY SHOWN ON SHEET SSC-11
*** QUANTITY REFLECTS CONTINUATION OF PATHWAY SHOWN ON SHEET SSC-10

UNOFFICIAL WEB COPY

DELAWARE DEPARTMENT OF TRANSPORTATION

ADDENDUMS / REVISIONS	
ADDENDUM NO. 3 VOIDED SHEET 718	
MODIFIED ITMS DESIGN SEE SHEET 718A, 02/18/2011, JCR	

SCALE 0 50 100 150 FEET

SR1 / I-95 INTERCHANGE

CONTRACT	28-090-03
COUNTY	NEW CASTLE
BRIDGE NO.	
DESIGNED BY:	
CHECKED BY:	

SIGNING, STRIPING & CONDUIT PLAN

SSC-8

SHEET NO.	718
TOTAL SHTS.	803

1/14/2009 5:33:58 PM
M:\PROJECTS\2003\03059_DELTRNPK\SRIMALL\CADD\2809003\PLANS\CP08_SSC_SR1.DGN

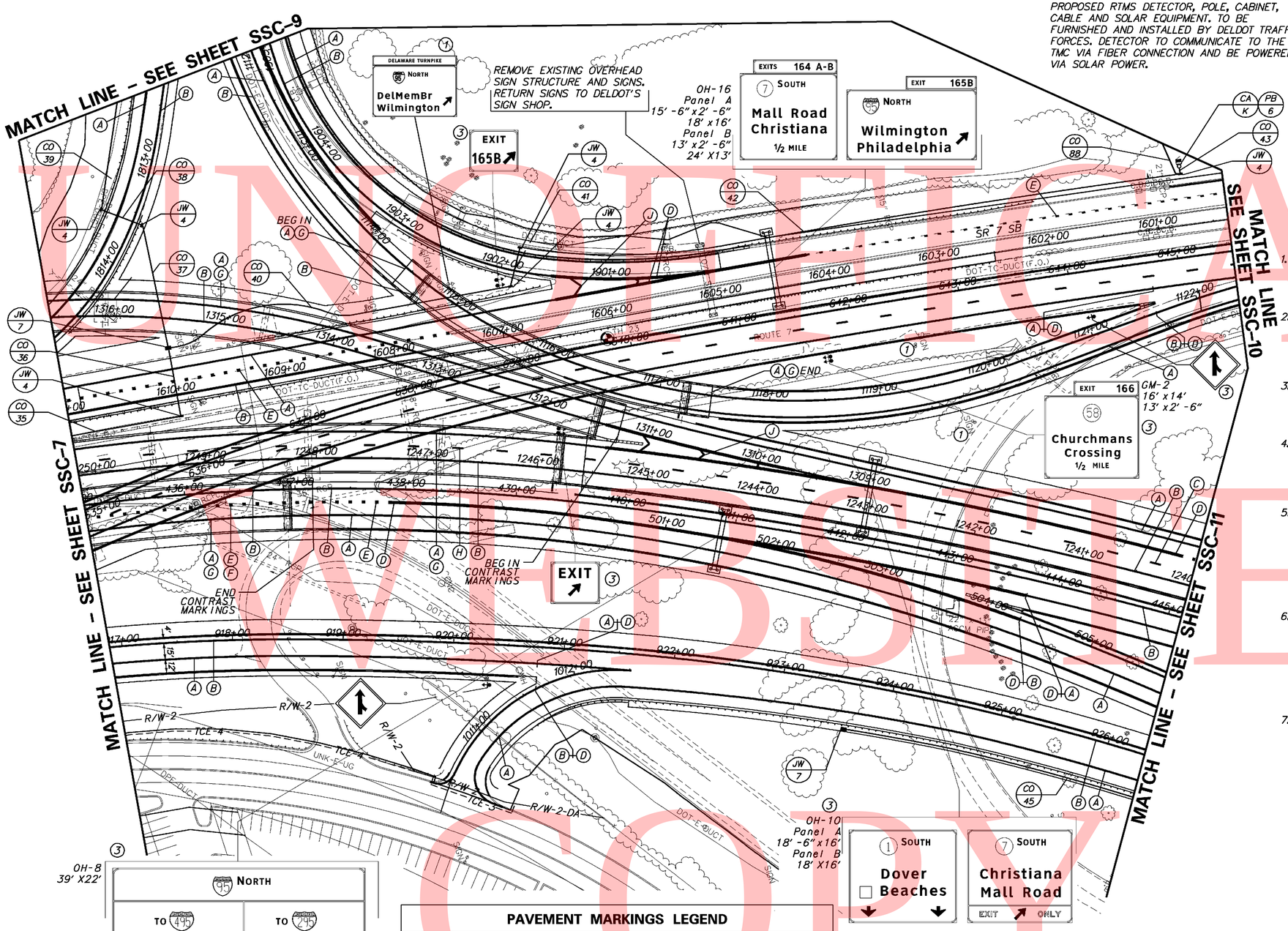

SIGNING LEGEND

①	REMOVE EXISTING SIGN
②	EXISTING SIGN TO REMAIN
③	PLACE NEW SIGN
④	RENEW EXISTING SIGN
⑤	REPOSITION EXISTING SIGN

SIGN NOTE:

ALL EXISTING OVERHEAD GUIDE SIGNS TO BE REMOVED UNLESS OTHERWISE NOTED.

ALL EXISTING REGULATORY, WARNING, AND SPECIAL SIGNS ASSUMED TO BE REMOVED UNLESS OTHERWISE NOTED.

NOTES:

1. ALL PROPOSED ITMS CONNECTIONS AND TERMINATIONS SHALL BE COMPLETED BY DELDOT FORCES. THE CONTRACTOR SHALL CONTACT DELDOTS SIGNAL CONSTRUCTION MANAGER AT 302.222.5920 TEN (10) DAYS PRIOR TO REQUIRED WORK
2. ALL UNDERGROUND ITMS FACILITIES TO BE INSTALLED BY THE CONTRACTOR. PRIOR TO COMPLETION OF UNDERGROUND FACILITIES THE CONTRACTOR SHALL CONTACT DELDOT'S SIGNAL CONSTRUCTION MANAGER AT 302.222.5920 TEN (10) DAYS PRIOR TO COMPLETION OF FACILITY.
3. ALL PROPOSED ITMS DEVICE TO BE FURNISHED AND INSTALLED BY DELDOT TRAFFIC FORCES. UPON CONTACT BY THE CONTRACTOR DELDOT TRAFFIC FORCES WILL DEVELOP A SCHEDULE OF WHEN WORK CAN BE PERFORMED AVOIDING CONFLICT WITH THE CONTRACTORS SCHEDULE.
4. CONTRACTOR SHALL BE RESPONSIBLE FOR ALL INSTALLATION AND REMOVAL OF ALL PROPOSED, TEMPORARY AND EXISTING STRIPING AS REQUIRED. ALL PROPOSED MARKINGS SHALL TIE INTO EXISTING MARKINGS IN ACCORDANCE WITH THE MUTCD AND AS DIRECTED BY DELDOT'S CONSTRUCTION ENGINEER.
5. THE CONTRACTOR SHALL INSTALL AND REMOVE THE REGULATORY, WARNING, AND SPECIAL SIGNS AND POSTS WITHIN THE CONTRACT LIMITS, AS SHOWN. DELDOT SHALL FABRICATE AND SUPPLY THE REGULATORY, WARNING, AND SPECIAL SIGNS AND POSTS TO THE CONTRACTOR. FOR COORDINATION AND PICK UP OF ALL SIGNS AND POSTS, THE CONTRACTOR SHALL CONTACT DELDOT'S SIGN SHOP AT 302.760.2581. ALLOW FOUR (4) WEEKS FOR DELIVERY. ALL SIGNING MATERIALS REMOVED FROM THIS PROJECT SHALL BE RETURNED TO DELDOT'S SIGN SHOP.
6. ALL EXISTING OVERHEAD AND BRIDGE MOUNTED SIGNS AND STRUCTURES SHALL BE REMOVED BY THE CONTRACTOR WITHIN THE CONTRACT LIMITS UNLESS OTHERWISE NOTED. THE CONTRACTOR SHALL FURNISH AND INSTALL ALL PROPOSED OVERHEADS AND CANTILEVER SIGN STRUCTURES, FOUNDATIONS, AND SIGNS. THE CONTRACTOR SHALL RETURN ALL SIGNS REMOVED FROM THE PROJECT TO DELDOT'S SIGN SHOP. THE CONTRACTOR SHALL CONTACT DELDOT'S SIGN SHOP AT 302.760.2581 TO ARRANGE FOR DELIVERY OF SIGNS.
7. CONTRACTOR SHALL INSTALL RAISED PAVEMENT MARKERS IN ACCORDANCE WITH THE MUTCD.

PAVEMENT MARKINGS LEGEND

SYMBOL	ITEM	QUANTITY
(A)	6" SOLID WHITE EPOXY RESIN PAVEMENT STRIPING (ITEM 748507)	7040 LF
(B)	6" SOLID YELLOW EPOXY RESIN PAVEMENT STRIPING (ITEM 748507)	7,650 LF
(C)	6" DASHED WHITE EPOXY RESIN PAVEMENT STRIPING, 10' LINE & 30' GAP (ITEM 748507)	410 LF
(D)	12" SOLID WHITE EPOXY RESIN PAVEMENT STRIPING (ITEM 748509)	2,390 LF
(E)	12" DASHED WHITE EPOXY RESIN PAVEMENT STRIPING, 3' LINE & 9' GAP (ITEM 748509)	255 LF

PAVEMENT MARKINGS LEGEND

SYMBOL	ITEM	QUANTITY
(F)	12" SOLID BLACK EPOXY RESIN PAVEMENT STRIPING, 3' LINE & 9' GAP (ITEM 748539)	70 LF
(G)	3" SOLID BLACK EPOXY RESIN PAVEMENT STRIPING (ITEM 748557)	1485 LF
(H)	9" RETROREFLECTIVE PREFORMED PATTERNED CONTRAST MARKING, 10' LINE & 30' GAP (ITEM 748547)	115 LF
(J)	12" SOLID WHITE ALKYD THERMOPLASTIC PAVEMENT STRIPING (ITEM 748027)	120 LF

CONDUIT RUN SCHEDULE

	CR*	*OF CON	SIZE	LENGTH	B/T/O	AMOUNT AND TYPE OF CABLE/ WIRE
	35	Pathway Information Shown on Sheet SSC-7				
	36	1	4"	65'	B	Comm. Cable
	37	1	4"	120'	T	Comm. Cable
	38	1	4"	40'	B	Comm. Cable
*	39	1	4"	600'	T	Comm. Cable
	40	1	4"	310'	T	Comm. Cable
	41	1	4"	35'	B	Comm. Cable
	42	1	4"	600'	T	Comm. Cable
	43	2	2.5"	10'	T	Comm. Cable
	44					
**	45	1	4"	600'	T	Empty
***	88	1	4"	225'	T	Comm. Cable

B = BORE, T = TRENCH, O = OPEN CUT.
* QUANTITY REFLECTS CONTINUATION OF PATHWAY SHOWN ON SHEET SSC-9
** QUANTITY REFLECTS CONTINUATION OF PATHWAY SHOWN ON SHEET SSC-11
*** QUANTITY REFLECTS CONTINUATION OF PATHWAY SHOWN ON SHEET SSC-10

UNOFFICIAL WEB COPY

DELAWARE DEPARTMENT OF TRANSPORTATION

ADDENDUMS / REVISIONS
ADDENDUM NO. 3 THIS SHEET 718A
REPLACES VOIDED SHEET 718
02/18/2011, JCR

SCALE 0 50 100 150 FEET

SR1 / I-95 INTERCHANGE

CONTRACT 28-090-03
COUNTY NEW CASTLE
BRIDGE NO.
DESIGNED BY: RK&K
CHECKED BY: JCR

SIGNING, STRIPING & CONDUIT PLAN

SSC-8
SHEET NO. 718A
TOTAL SHTS. 803

1/14/2009 5:33:58 PM
M:\PROJECTS\3459_DELTRNPK\SR1MALL\CADD\2809003\PLANS\CP86_SSC_SR1.DGN

UNOFFICIAL WEBSITE COPY

SIGNING LEGEND

①	REMOVE EXISTING SIGN
②	EXISTING SIGN TO REMAIN
③	PLACE NEW SIGN
④	RENEW EXISTING SIGN
⑤	REPOSITION EXISTING SIGN

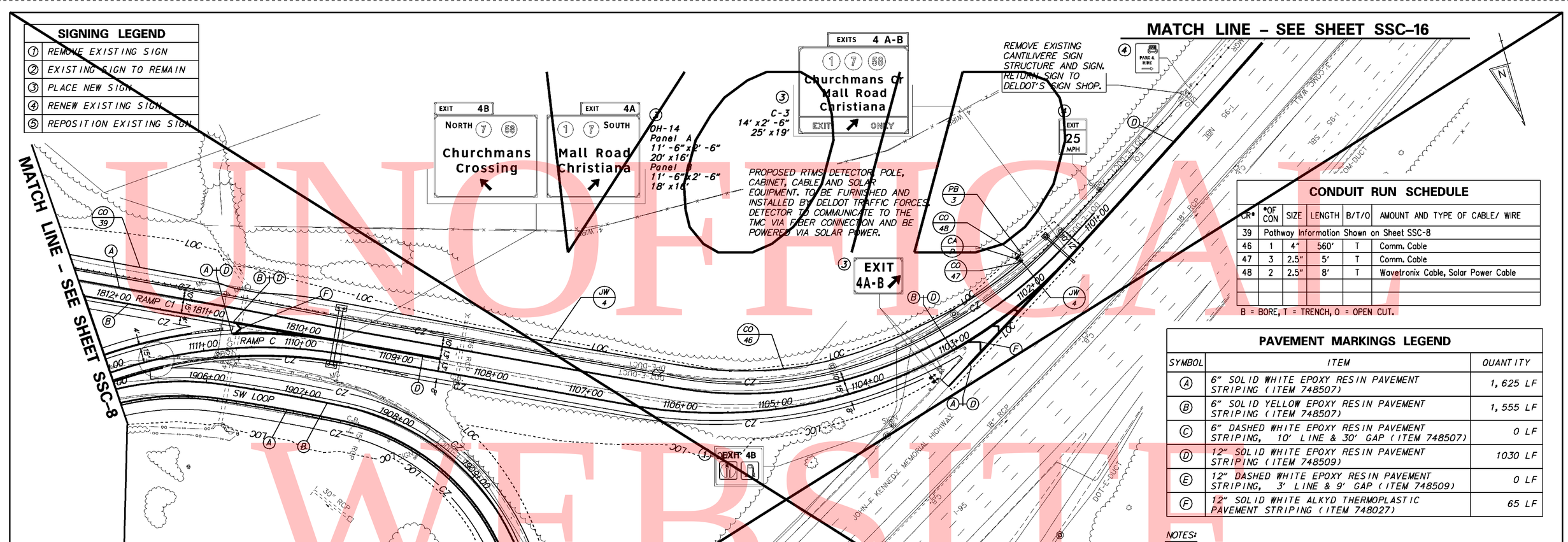

CONDUIT RUN SCHEDULE

CR#	#OF CON	SIZE	LENGTH	B/T/O	AMOUNT AND TYPE OF CABLE/ WIRE
39	Pathway Information Shown on Sheet SSC-8				
46	1	4"	560'	T	Comm. Cable
47	3	2.5"	5'	T	Comm. Cable
48	2	2.5"	8'	T	Wavetronix Cable, Solar Power Cable

B = BORE, T = TRENCH, O = OPEN CUT.

PAVEMENT MARKINGS LEGEND

SYMBOL	ITEM	QUANTITY
(A)	6" SOLID WHITE EPOXY RESIN PAVEMENT STRIPING (ITEM 748507)	1,625 LF
(B)	6" SOLID YELLOW EPOXY RESIN PAVEMENT STRIPING (ITEM 748507)	1,555 LF
(C)	6" DASHED WHITE EPOXY RESIN PAVEMENT STRIPING, 10' LINE & 30' GAP (ITEM 748507)	0 LF
(D)	12" SOLID WHITE EPOXY RESIN PAVEMENT STRIPING (ITEM 748509)	1030 LF
(E)	12" DASHED WHITE EPOXY RESIN PAVEMENT STRIPING, 3' LINE & 9' GAP (ITEM 748509)	0 LF
(F)	12" SOLID WHITE ALKYD THERMOPLASTIC PAVEMENT STRIPING (ITEM 748027)	65 LF

NOTES:

1. ALL PROPOSED ITMS CONNECTIONS AND TERMINATIONS SHALL BE COMPLETED BY DELDOT FORCES. THE CONTRACTOR SHALL CONTACT DELDOTS SIGNAL CONSTRUCTION MANAGER AT 302.222.5920 TEN (10) DAYS PRIOR TO REQUIRED WORK
2. ALL UNDERGROUND ITMS FACILITIES TO BE INSTALLED BY THE CONTRACTOR. PRIOR TO COMPLETION OF UNDERGROUND FACILITIES THE CONTRACTOR SHALL CONTACT DELDOT'S SIGNAL CONSTRUCTION MANAGER AT 302.222.5920 TEN (10) DAYS PRIOR TO COMPLETION OF FACILITY.
3. ALL PROPOSED ITMS DEVICE TO BE FURNISHED AND INSTALLED BY DELDOT TRAFFIC FORCES. UPON CONTACT BY THE CONTRACTOR DELDOT TRAFFIC FORCES WILL DEVELOP A SCHEDULE OF WHEN WORK CAN BE PERFORMED AVOIDING CONFLICT WITH THE CONTRACTORS SCHEDULE.
4. CONTRACTOR SHALL BE RESPONSIBLE FOR ALL INSTALLATION AND REMOVAL OF ALL PROPOSED, TEMPORARY AND EXISTING STRIPING AS REQUIRED. ALL PROPOSED MARKINGS SHALL TIE INTO EXISTING MARKINGS IN ACCORDANCE WITH THE MUTCD AND AS DIRECTED BY DELDOT'S CONSTRUCTION ENGINEER.
5. THE CONTRACTOR SHALL INSTALL AND REMOVE THE REGULATORY, WARNING, AND SPECIAL SIGNS AND POSTS WITHIN THE CONTRACT LIMITS, AS SHOWN. DELDOT SHALL FABRICATE AND SUPPLY THE REGULATORY, WARNING, AND SPECIAL SIGNS AND POSTS TO THE CONTRACTOR. FOR COORDINATION AND PICK UP OF ALL SIGNS AND POSTS, THE CONTRACTOR SHALL CONTACT DELDOT'S SIGN SHOP AT 302.760.2581. ALLOW FOUR (4) WEEKS FOR DELIVERY. ALL SIGNING MATERIALS REMOVED FROM THIS PROJECT SHALL BE RETURNED TO DELDOT'S SIGN SHOP.
6. ALL EXISTING OVERHEAD AND BRIDGE MOUNTED SIGNS AND STRUCTURES SHALL BE REMOVED BY THE CONTRACTOR WITHIN THE CONTRACT LIMITS UNLESS OTHERWISE NOTED. THE CONTRACTOR SHALL FURNISH AND INSTALL ALL PROPOSED OVERHEADS AND CANTILEVER SIGN STRUCTURES, FOUNDATIONS, AND SIGNS. THE CONTRACTOR SHALL RETURN ALL SIGNS REMOVED FROM THE PROJECT TO DELDOT'S SIGN SHOP. THE CONTRACTOR SHALL CONTACT DELDOT'S SIGN SHOP AT 302.760.2581 TO ARRANGE FOR DELIVERY OF SIGNS.
7. CONTRACTOR SHALL INSTALL RAISED PAVEMENT MARKERS IN ACCORDANCE WITH THE MUTCD.

DELAWARE DEPARTMENT OF TRANSPORTATION

ADDENDUMS / REVISIONS
ADDENDUM NO. VOIDED SHEET 719
MODIFIED ITMS DESIGN SEE SHEET 719A, 02/18/2011, JCR

SCALE 0 50 100 150 FEET

SR1 / I-95 INTERCHANGE

CONTRACT 28-090-03
COUNTY NEW CASTLE
BRIDGE NO.
DESIGNED BY:
CHECKED BY:

SIGNING, STRIPING & CONDUIT PLAN

SSC-9
SHEET NO. 719
TOTAL SHTS. 803

UNOFFICIAL WEBSITE COPY

SIGNING LEGEND

①	REMOVE EXISTING SIGN
②	EXISTING SIGN TO REMAIN
③	PLACE NEW SIGN
④	RENEW EXISTING SIGN
⑤	REPOSITION EXISTING SIGN

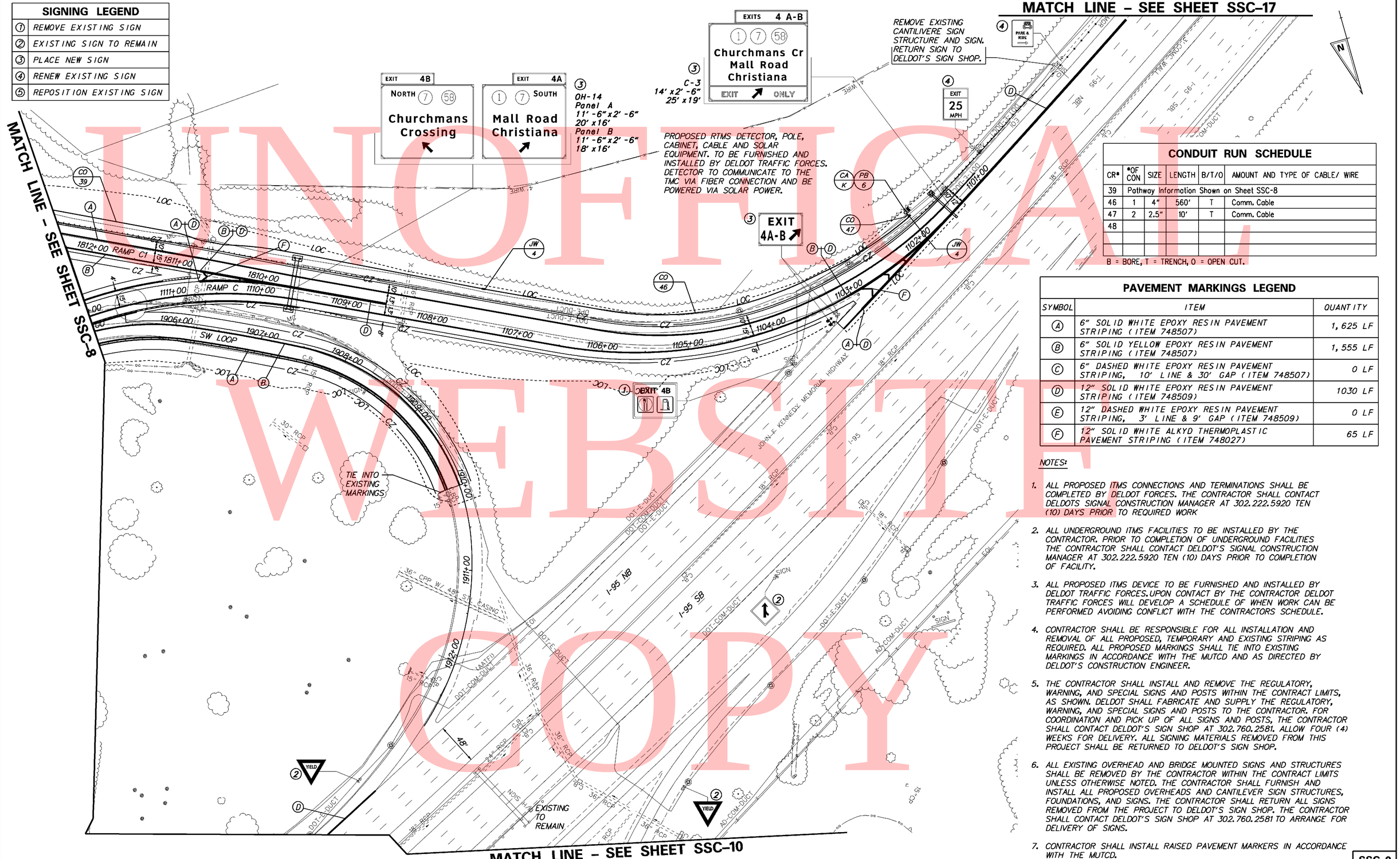

CONDUIT RUN SCHEDULE

CR#	#OF CON	SIZE	LENGTH	B/T/O	AMOUNT AND TYPE OF CABLE/ WIRE
39	Pathway Information Shown on Sheet SSC-8				
46	1	4"	560'	T	Comm. Cable
47	2	2.5"	10'	T	Comm. Cable
48					

B = BORE, T = TRENCH, O = OPEN CUT.

PAVEMENT MARKINGS LEGEND

SYMBOL	ITEM	QUANTITY
(A)	6" SOLID WHITE EPOXY RESIN PAVEMENT STRIPING (ITEM 748507)	1,625 LF
(B)	6" SOLID YELLOW EPOXY RESIN PAVEMENT STRIPING (ITEM 748507)	1,555 LF
(C)	6" DASHED WHITE EPOXY RESIN PAVEMENT STRIPING, 10' LINE & 30' GAP (ITEM 748507)	0 LF
(D)	12" SOLID WHITE EPOXY RESIN PAVEMENT STRIPING (ITEM 748509)	1030 LF
(E)	12" DASHED WHITE EPOXY RESIN PAVEMENT STRIPING, 3' LINE & 9' GAP (ITEM 748509)	0 LF
(F)	12" SOLID WHITE ALKYD THERMOPLASTIC PAVEMENT STRIPING (ITEM 748027)	65 LF

NOTES:

1. ALL PROPOSED ITMS CONNECTIONS AND TERMINATIONS SHALL BE COMPLETED BY DELDOT FORCES. THE CONTRACTOR SHALL CONTACT DELDOTS SIGNAL CONSTRUCTION MANAGER AT 302.222.5920 TEN (10) DAYS PRIOR TO REQUIRED WORK
2. ALL UNDERGROUND ITMS FACILITIES TO BE INSTALLED BY THE CONTRACTOR. PRIOR TO COMPLETION OF UNDERGROUND FACILITIES THE CONTRACTOR SHALL CONTACT DELDOT'S SIGNAL CONSTRUCTION MANAGER AT 302.222.5920 TEN (10) DAYS PRIOR TO COMPLETION OF FACILITY.
3. ALL PROPOSED ITMS DEVICE TO BE FURNISHED AND INSTALLED BY DELDOT TRAFFIC FORCES. UPON CONTACT BY THE CONTRACTOR DELDOT TRAFFIC FORCES WILL DEVELOP A SCHEDULE OF WHEN WORK CAN BE PERFORMED AVOIDING CONFLICT WITH THE CONTRACTORS SCHEDULE.
4. CONTRACTOR SHALL BE RESPONSIBLE FOR ALL INSTALLATION AND REMOVAL OF ALL PROPOSED, TEMPORARY AND EXISTING STRIPING AS REQUIRED. ALL PROPOSED MARKINGS SHALL TIE INTO EXISTING MARKINGS IN ACCORDANCE WITH THE MUTCD AND AS DIRECTED BY DELDOT'S CONSTRUCTION ENGINEER.
5. THE CONTRACTOR SHALL INSTALL AND REMOVE THE REGULATORY, WARNING, AND SPECIAL SIGNS AND POSTS WITHIN THE CONTRACT LIMITS, AS SHOWN. DELDOT SHALL FABRICATE AND SUPPLY THE REGULATORY, WARNING, AND SPECIAL SIGNS AND POSTS TO THE CONTRACTOR. FOR COORDINATION AND PICK UP OF ALL SIGNS AND POSTS, THE CONTRACTOR SHALL CONTACT DELDOT'S SIGN SHOP AT 302.760.2581. ALLOW FOUR (4) WEEKS FOR DELIVERY. ALL SIGNING MATERIALS REMOVED FROM THIS PROJECT SHALL BE RETURNED TO DELDOT'S SIGN SHOP.
6. ALL EXISTING OVERHEAD AND BRIDGE MOUNTED SIGNS AND STRUCTURES SHALL BE REMOVED BY THE CONTRACTOR WITHIN THE CONTRACT LIMITS UNLESS OTHERWISE NOTED. THE CONTRACTOR SHALL FURNISH AND INSTALL ALL PROPOSED OVERHEADS AND CANTILEVER SIGN STRUCTURES, FOUNDATIONS, AND SIGNS. THE CONTRACTOR SHALL RETURN ALL SIGNS REMOVED FROM THE PROJECT TO DELDOT'S SIGN SHOP. THE CONTRACTOR SHALL CONTACT DELDOT'S SIGN SHOP AT 302.760.2581 TO ARRANGE FOR DELIVERY OF SIGNS.
7. CONTRACTOR SHALL INSTALL RAISED PAVEMENT MARKERS IN ACCORDANCE WITH THE MUTCD.

2/16/2011 4:04:43 PM
C:\PROJECTS-LOCAL\PROJECTS\$$*59_DELTRNPK\SRIMALL\CADD\2809003\PLANS\CP87_SSC_SR1.DGN

DELAWARE DEPARTMENT OF TRANSPORTATION

ADDENDUMS / REVISIONS	
ADDENDUM NO. THIS SHEET 719A	
REPLACES VOIDED SHEET 719	
02/18/2011, JCR	

SCALE 0 50 100 150 FEET

SR1 / I-95 INTERCHANGE

CONTRACT	28-090-03	BRIDGE NO.
COUNTY	NEW CASTLE	DESIGNED BY: RK&K
		CHECKED BY: JCR

SIGNING, STRIPING & CONDUIT PLAN

SHEET NO.	SSC-9
TOTAL SHTS.	719A
	803

UNOFFICIAL WEBSITE COPY

MATCH LINE – SEE SHEET SSC-9

MATCH LINE – SEE SHEET SSC-11

MATCH LINE SEE SHEET SSC-8

NOTES:

1. ALL PROPOSED ITMS CONNECTIONS AND TERMINATIONS SHALL BE COMPLETED BY DELDOT FORCES. THE CONTRACTOR SHALL CONTACT DELDOTS SIGNAL CONSTRUCTION MANAGER AT 302.222.5920 TEN (10) DAYS PRIOR TO REQUIRED WORK
2. ALL UNDERGROUND ITMS FACILITIES TO BE INSTALLED BY THE CONTRACTOR. PRIOR TO COMPLETION OF UNDERGROUND FACILITIES THE CONTRACTOR SHALL CONTACT DELDOT'S SIGNAL CONSTRUCTION MANAGER AT 302.222.5920 TEN (10) DAYS PRIOR TO COMPLETION OF FACILITY.
3. ALL PROPOSED ITMS DEVICE TO BE FURNISHED AND INSTALLED BY DELDOT TRAFFIC FORCES. UPON CONTACT BY THE CONTRACTOR DELDOT TRAFFIC FORCES WILL DEVELOP A SCHEDULE OF WHEN WORK CAN BE PERFORMED AVOIDING CONFLICT WITH THE CONTRACTORS SCHEDULE.
4. CONTRACTOR SHALL BE RESPONSIBLE FOR ALL INSTALLATION AND REMOVAL OF ALL PROPOSED, TEMPORARY AND EXISTING STRIPING AS REQUIRED. ALL PROPOSED MARKINGS SHALL TIE INTO EXISTING MARKINGS IN ACCORDANCE WITH THE MUTCD AND AS DIRECTED BY THE DELDOT'S CONSTRUCTION ENGINEER.
5. THE CONTRACTOR SHALL INSTALL AND REMOVE THE REGULATORY, WARNING, AND SPECIAL SIGNS AND POSTS WITHIN THE CONTRACT LIMITS, AS SHOWN. DELDOT SHALL FABRICATE AND SUPPLY THE REGULATORY, WARNING, AND SPECIAL SIGNS AND POSTS TO THE CONTRACTOR. FOR COORDINATION AND PICK UP OF ALL SIGNS AND POSTS, THE CONTRACTOR SHALL CONTACT DELDOT'S SIGN SHOP AT 302.760.2581. ALLOW FOUR (4) WEEKS FOR DELIVERY. ALL SIGNING MATERIALS REMOVED FROM THIS PROJECT SHALL BE RETURNED TO DELDOT'S SIGN SHOP.
6. ALL EXISTING OVERHEAD AND BRIDGE MOUNTED SIGNS AND STRUCTURES SHALL BE REMOVED BY THE CONTRACTOR WITHIN THE CONTRACT LIMITS UNLESS OTHERWISE NOTED. THE CONTRACTOR SHALL FURNISH AND INSTALL ALL PROPOSED OVERHEADS AND CANTILEVER SIGN STRUCTURES, FOUNDATIONS, AND SIGNS. THE CONTRACTOR SHALL RETURN ALL SIGNS REMOVED FROM THE PROJECT TO DELDOT'S SIGN SHOP. THE CONTRACTOR SHALL CONTACT DELDOT'S SIGN SHOP AT 302.760.2581 TO ARRANGE FOR DELIVERY OF SIGNS.
7. CONTRACTOR SHALL INSTALL RAISED PAVEMENT MARKERS IN ACCORDANCE WITH THE MUTCD.

INSTALL PROPOSED TYPE 7 JUNCTION WELL OVER EXISTING FIBER PATHWAY (JW 7)

PROPOSED CCTV CAMERA, RTMS DETECTOR, POLE, CABINET, CABLE TO BE FURNISHED AND INSTALLED BY DELDOT TRAFFIC FORCES. DEVICES TO COMMUNICATE TO THE TMC VIA FIBER CONNECTION AND BE POWERED VIA XXX

REMOVE EXISTING CANTILIVERE SIGN STRUCTURE AND SIGN. RETURN SIGN TO DELDOT'S SIGN SHOP.

PAVEMENT MARKINGS LEGEND

SYMBOL	ITEM	QUANTITY
(A)	6" SOLID WHITE EPOXY RESIN PAVEMENT STRIPING (ITEM 748507)	1725 LF
(B)	6" SOLID YELLOW EPOXY RESIN PAVEMENT STRIPING (ITEM 748507)	150 LF
(C)	6" DASHED WHITE EPOXY RESIN PAVEMENT STRIPING, 10' LINE & 30' GAP (ITEM 748507)	75 LF
(D)	12" SOLID WHITE EPOXY RESIN PAVEMENT STRIPING (ITEM 748509)	620 LF
(E)	12" SOLID DASHED EPOXY RESIN PAVEMENT STRIPING, 10' LINE & 30' GAP (ITEM 748509)	150 LF

CONDUIT RUN SCHEDULE

CR#	#OF CON	SIZE	LENGTH	B/T/O	AMOUNT AND TYPE OF CABLE/ WIRE
49	1	4"	335'	B	Comm. Cable
50	3	2.5"	10'	T	Comm. Cable, Wavetronix Cable
51	2	2.5"	8'	T	Comm. Cable, Wavetronix Cable
77	1	2"	225'	T	(2)2/#8 U.F. W/Ground
78	1	2"	250'	T	(2)2/#8 U.F. W/Ground
79	1	2"	165'	B	(2)2/#8 U.F. W/Ground
80	1	2"	70'	T	(2)2/#8 U.F. W/Ground
88	Pathway Information Shown on Sheet SSC-8				
89	1	4"	275'	B	Comm. Cable

B = BORE, T = TRENCH, O = OPEN CUT.

SIGNING LEGEND

(1)	REMOVE EXISTING SIGN
(2)	EXISTING SIGN TO REMAIN
(3)	PLACE NEW SIGN
(4)	RENEW EXISTING SIGN
(5)	REPOSITION EXISTING SIGN

DELAWARE DEPARTMENT OF TRANSPORTATION	ADDENDUMS / REVISIONS ADDENDUM NO. 3, VOIDED SHEET 720 MODIFIED ITMS DESIGN SEE SHEET 720A 02/18/2011, JCR	SCALE 0 50 100 150 FEET
SR1 / I-95 INTERCHANGE	CONTRACT 28-090-03 COUNTY NEW CASTLE BRIDGE NO. DESIGNED BY: CHECKED BY:	SIGNING, STRIPING & CONDUIT PLAN
SSC-10 SHEET NO. 720 TOTAL SHTS. 803		

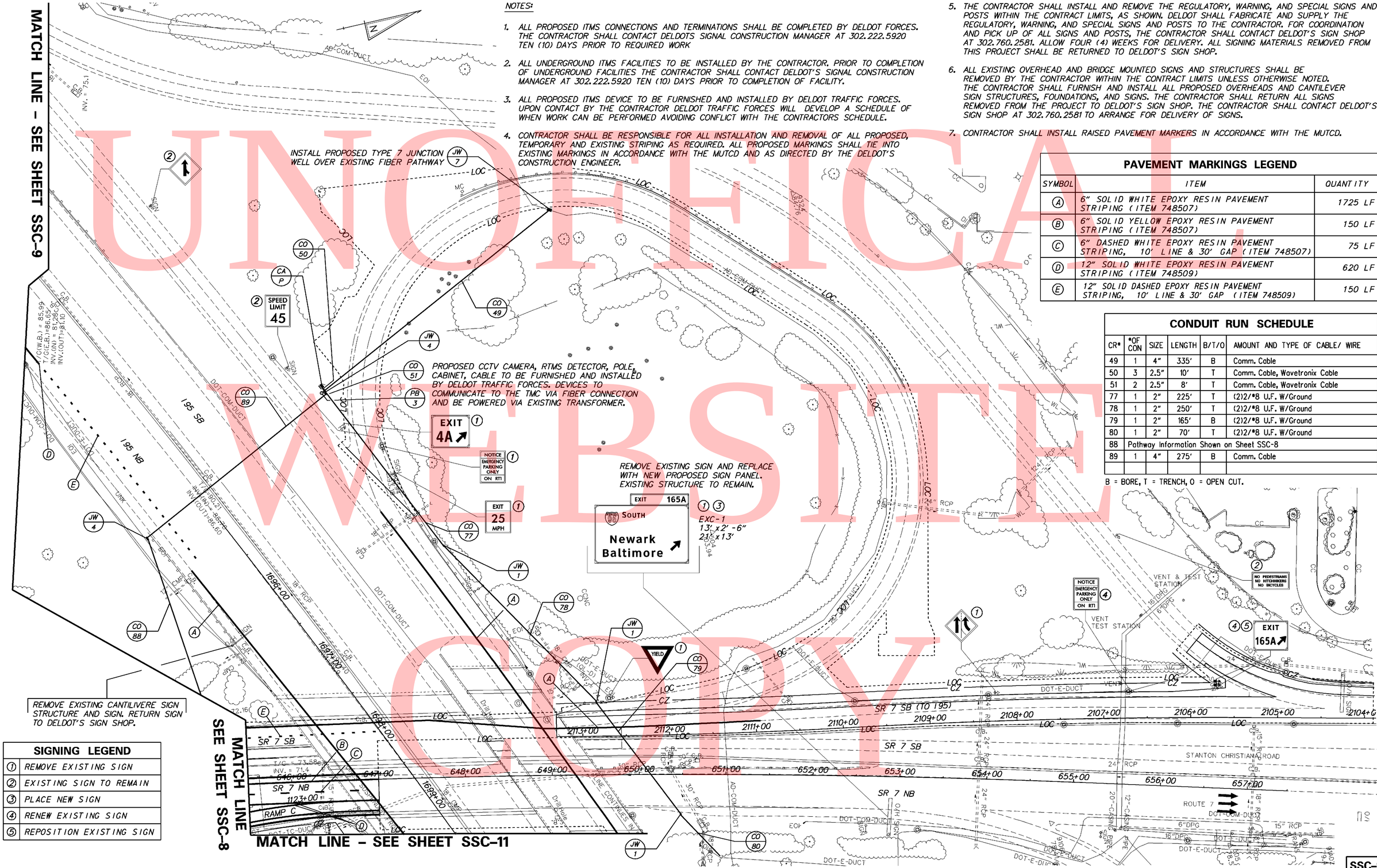

NOTES:

1. ALL PROPOSED ITMS CONNECTIONS AND TERMINATIONS SHALL BE COMPLETED BY DELDOT FORCES. THE CONTRACTOR SHALL CONTACT DELDOTS SIGNAL CONSTRUCTION MANAGER AT 302.222.5920 TEN (10) DAYS PRIOR TO REQUIRED WORK
2. ALL UNDERGROUND ITMS FACILITIES TO BE INSTALLED BY THE CONTRACTOR. PRIOR TO COMPLETION OF UNDERGROUND FACILITIES THE CONTRACTOR SHALL CONTACT DELDOT'S SIGNAL CONSTRUCTION MANAGER AT 302.222.5920 TEN (10) DAYS PRIOR TO COMPLETION OF FACILITY.
3. ALL PROPOSED ITMS DEVICE TO BE FURNISHED AND INSTALLED BY DELDOT TRAFFIC FORCES. UPON CONTACT BY THE CONTRACTOR DELDOT TRAFFIC FORCES WILL DEVELOP A SCHEDULE OF WHEN WORK CAN BE PERFORMED AVOIDING CONFLICT WITH THE CONTRACTORS SCHEDULE.
4. CONTRACTOR SHALL BE RESPONSIBLE FOR ALL INSTALLATION AND REMOVAL OF ALL PROPOSED, TEMPORARY AND EXISTING STRIPING AS REQUIRED. ALL PROPOSED MARKINGS SHALL TIE INTO EXISTING MARKINGS IN ACCORDANCE WITH THE MUTCD AND AS DIRECTED BY THE DELDOT'S CONSTRUCTION ENGINEER.
5. THE CONTRACTOR SHALL INSTALL AND REMOVE THE REGULATORY, WARNING, AND SPECIAL SIGNS AND POSTS WITHIN THE CONTRACT LIMITS, AS SHOWN. DELDOT SHALL FABRICATE AND SUPPLY THE REGULATORY, WARNING, AND SPECIAL SIGNS AND POSTS TO THE CONTRACTOR. FOR COORDINATION AND PICK UP OF ALL SIGNS AND POSTS, THE CONTRACTOR SHALL CONTACT DELDOT'S SIGN SHOP AT 302.760.2581. ALLOW FOUR (4) WEEKS FOR DELIVERY. ALL SIGNING MATERIALS REMOVED FROM THIS PROJECT SHALL BE RETURNED TO DELDOT'S SIGN SHOP.
6. ALL EXISTING OVERHEAD AND BRIDGE MOUNTED SIGNS AND STRUCTURES SHALL BE REMOVED BY THE CONTRACTOR WITHIN THE CONTRACT LIMITS UNLESS OTHERWISE NOTED. THE CONTRACTOR SHALL FURNISH AND INSTALL ALL PROPOSED OVERHEADS AND CANTILEVER SIGN STRUCTURES, FOUNDATIONS, AND SIGNS. THE CONTRACTOR SHALL RETURN ALL SIGNS REMOVED FROM THE PROJECT TO DELDOT'S SIGN SHOP. THE CONTRACTOR SHALL CONTACT DELDOT'S SIGN SHOP AT 302.760.2581 TO ARRANGE FOR DELIVERY OF SIGNS.
7. CONTRACTOR SHALL INSTALL RAISED PAVEMENT MARKERS IN ACCORDANCE WITH THE MUTCD.

PAVEMENT MARKINGS LEGEND

SYMBOL	ITEM	QUANTITY
(A)	6" SOLID WHITE EPOXY RESIN PAVEMENT STRIPING (ITEM 748507)	1725 LF
(B)	6" SOLID YELLOW EPOXY RESIN PAVEMENT STRIPING (ITEM 748507)	150 LF
(C)	6" DASHED WHITE EPOXY RESIN PAVEMENT STRIPING, 10' LINE & 30' GAP (ITEM 748507)	75 LF
(D)	12" SOLID WHITE EPOXY RESIN PAVEMENT STRIPING (ITEM 748509)	620 LF
(E)	12" SOLID DASHED EPOXY RESIN PAVEMENT STRIPING, 10' LINE & 30' GAP (ITEM 748509)	150 LF

CONDUIT RUN SCHEDULE

CR#	#OF CON	SIZE	LENGTH	B/T/O	AMOUNT AND TYPE OF CABLE/ WIRE
49	1	4"	335'	B	Comm. Cable
50	3	2.5"	10'	T	Comm. Cable, Wavetronix Cable
51	2	2.5"	8'	T	Comm. Cable, Wavetronix Cable
77	1	2"	225'	T	(2)2/#8 U.F. W/Ground
78	1	2"	250'	T	(2)2/#8 U.F. W/Ground
79	1	2"	165'	B	(2)2/#8 U.F. W/Ground
80	1	2"	70'	T	(2)2/#8 U.F. W/Ground
88	Pathway Information Shown on Sheet SSC-8				
89	1	4"	275'	B	Comm. Cable

B = BORE, T = TRENCH, O = OPEN CUT.

SIGNING LEGEND

(1)	REMOVE EXISTING SIGN
(2)	EXISTING SIGN TO REMAIN
(3)	PLACE NEW SIGN
(4)	RENEW EXISTING SIGN
(5)	REPOSITION EXISTING SIGN

UNOFFICIAL WEBSITE COPY

2/16/2011 10:00:07 AM
M:\PROJECTS\53*59_DELTRNPK\SR1MALL\CADD\2809003\PLANS\CP88_SSC_SR1.DGN

DELAWARE DEPARTMENT OF TRANSPORTATION

ADDENDUMS / REVISIONS	
ADDENDUM NO. 3 THIS SHEET 720A	
REPLACES VOIDED SHEET 720	
02/18/2011, JCR	

SCALE 0 50 100 150 FEET

SR1 / I-95 INTERCHANGE

CONTRACT	28-090-03
COUNTY	NEW CASTLE
BRIDGE NO.	
DESIGNED BY: RK&K	
CHECKED BY: JCR	

SIGNING, STRIPING & CONDUIT PLAN

SSC-10
SHEET NO. 720A
TOTAL SHTS. 803

UNOFFICIAL WORKING COPY

PAVEMENT MARKINGS LEGEND

SYMBOL	ITEM	QUANTITY
(A)	6" SOLID WHITE EPOXY RESIN PAVEMENT STRIPING (ITEM 748507)	5,875 LF
(B)	6" SOLID YELLOW EPOXY RESIN PAVEMENT STRIPING (ITEM 748507)	5,485 LF
(C)	6" DASHED WHITE EPOXY RESIN PAVEMENT STRIPING, 10' LINE & 30' GAP (ITEM 748507)	1,070 LF
(D)	12" SOLID WHITE EPOXY RESIN PAVEMENT STRIPING (ITEM 748509)	1,350 LF
(E)	12" DASHED WHITE EPOXY RESIN PAVEMENT STRIPING, 3' LINE & 9' GAP (ITEM 748509)	330 LF
(F)	12" SOLID BLACK EPOXY RESIN PAVEMENT STRIPING, 3' LINE & 9' GAP (ITEM 748539)	215

CONDUIT RUN SCHEDULE

CR*	*OF CON	SIZE	LENGTH	B/T/O	AMOUNT AND TYPE OF CABLE/ WIRE
45	Pathway Information Shown on Sheet SSC-8				
52	3	2.5"	10'	T	Comm. Cable
53	2	2.5"	10'	T	Wavetronix Cable
54	1	4"	90'	T	Comm. Cable
55	1	4"	75'	T	Comm. Cable
56	3	2.5"	10'	T	Comm. Cable
57	2	2.5"	15'	T	Comm. Cable
58	2	2.5"	10'	T	Comm. Cable
59	1	1.5"	285'	T	Weather Sensor
60	1	4"	600'	T	Comm. Cable
* 61	1	4"	600'	T	Comm. Cable
81	1	2"	15'	T	Power
82	1	2"	75'	T	Power
83	1	2"	90'	T	Power
84	1	2"	130'	T	Power
85	1	2"	250'	T	Power
86	1	2"	250'	T	Power
* 87	1	2"	250'	T	Power

B = BORE, T = TRENCH, O = OPEN CUT.
* QUANTITY REFLECTS CONTINUATION OF PATHWAY SHOWN ON SHEET SSC-12

PAVEMENT MARKINGS LEGEND

SYMBOL	ITEM	QUANTITY
(G)	3" SOLID BLACK EPOXY RESIN PAVEMENT STRIPING (ITEM 748557)	850 LF
(H)	9" RETROREFLECTIVE PREFORMED PATTERNED CONTRAST MARKING, 10' LINE & 30' GAP (ITEM 748547)	215 LF

MATCH LINE SEE SHEET SSC-10

MATCH LINE - SEE SHEET SSC-8

MATCH LINE - SEE SHEET SSC-12

REMOVE EXISTING CCTV AND RETURN TO DELDOT TRAFFIC.

PROPOSED CCTV CAMERA, WEATHER STATION, POLES, CABINET, CABLE TO BE FURNISHED AND INSTALLED BY DELDOT TRAFFIC FORCES. DEVICES TO COMMUNICATE TO THE TMC VIA FIBER CONNECTION AND BE POWERED VIA POWER FEED

PROPOSED RTMS DETECTOR, POLE, CABINET, CABLE AND SOLAR EQUIPMENT TO BE FURNISHED AND INSTALLED BY DELDOT TRAFFIC FORCES. DETECTOR TO COMMUNICATE TO THE TMC VIA FIBER CONNECTION AND BE POWERED VIA SOLAR POWER.

32' RTMS POLE

75' CAMERA POLE

END CONTRAST MARKINGS

RAMP A

RAMP B

RAMP B1

RAMP E

I-95 NB

JOHN F KENNEDY MEMORIAL HIGHWAY

NOTES:

1. ALL PROPOSED ITMS CONNECTIONS AND TERMINATIONS SHALL BE COMPLETED BY DELDOT FORCES. THE CONTRACTOR SHALL CONTACT DELDOTS SIGNAL CONSTRUCTION MANAGER AT 302.222.5920 TEN (10) DAYS PRIOR TO REQUIRED WORK
2. ALL UNDERGROUND ITMS FACILITIES TO BE INSTALLED BY THE CONTRACTOR. PRIOR TO COMPLETION OF UNDERGROUND FACILITIES THE CONTRACTOR SHALL CONTACT DELDOT'S SIGNAL CONSTRUCTION MANAGER AT 302.222.5920 TEN (10) DAYS PRIOR TO COMPLETION OF FACILITY.
3. ALL PROPOSED ITMS DEVICE TO BE FURNISHED AND INSTALLED, AND BY DELDOT TRAFFIC FORCES. UPON CONTACT BY THE CONTRACTOR DELDOT TRAFFIC FORCES WILL DEVELOP A SCHEDULE OF WHEN WORK CAN BE PERFORMED AVOIDING CONFLICT WITH THE CONTRACTORS SCHEDULE.
4. CONTRACTOR SHALL BE RESPONSIBLE FOR ALL INSTALLATION AND REMOVAL OF ALL PROPOSED, TEMPORARY AND EXISTING STRIPING AS REQUIRED. ALL PROPOSED MARKINGS SHALL TIE INTO EXISTING MARKINGS IN ACCORDANCE WITH THE MUTCD AND AS DIRECTED BY THE DELDOT'S CONSTRUCTION ENGINEER.
5. THE CONTRACTOR SHALL INSTALL AND REMOVE THE REGULATORY, WARNING, AND SPECIAL SIGNS AND POSTS WITHIN THE CONTRACT LIMITS, AS SHOWN. DELDOT SHALL FABRICATE AND SUPPLY THE REGULATORY, WARNING, AND SPECIAL SIGNS AND POSTS TO THE CONTRACTOR. FOR COORDINATION AND PICK UP OF ALL SIGNS AND POSTS, THE CONTRACTOR SHALL CONTACT DELDOT'S SIGN SHOP AT 302.760.2581. ALLOW FOUR (4) WEEKS FOR DELIVERY. ALL SIGNING MATERIALS REMOVED FROM THIS PROJECT SHALL BE RETURNED TO DELDOT'S SIGN SHOP.
6. CONTRACTOR SHALL INSTALL RAISED PAVEMENT MARKERS IN ACCORDANCE WITH THE MUTCD.

SIGNING LEGEND

(1)	REMOVE EXISTING SIGN
(2)	EXISTING SIGN TO REMAIN
(3)	PLACE NEW SIGN
(4)	RENEW EXISTING SIGN
(5)	REPOSITION EXISTING SIGN

SIGN NOTE:

ALL EXISTING REGULATORY, WARNING, AND SPECIAL SIGNS ASSUMED TO BE REMOVED UNLESS OTHERWISE NOTED.

SSC-11

DELAWARE
DEPARTMENT OF TRANSPORTATION

ADDENDUMS / REVISIONS	
ADDENDUM NO. 1 VOIDED SHEET	
MODIFIED ITMS DESIGN SEE SHEET 721A,	
02/18/2011, JCR	

SCALE 0 50 100 150 FEET

SR1 / I-95 INTERCHANGE

CONTRACT	BRIDGE NO.	
28-090-03	DESIGNED BY:	
COUNTY	CHECKED BY:	
NEW CASTLE		

SIGNING, STRIPING & CONDUIT PLAN

SHEET NO.
721
TOTAL SHTS.
803

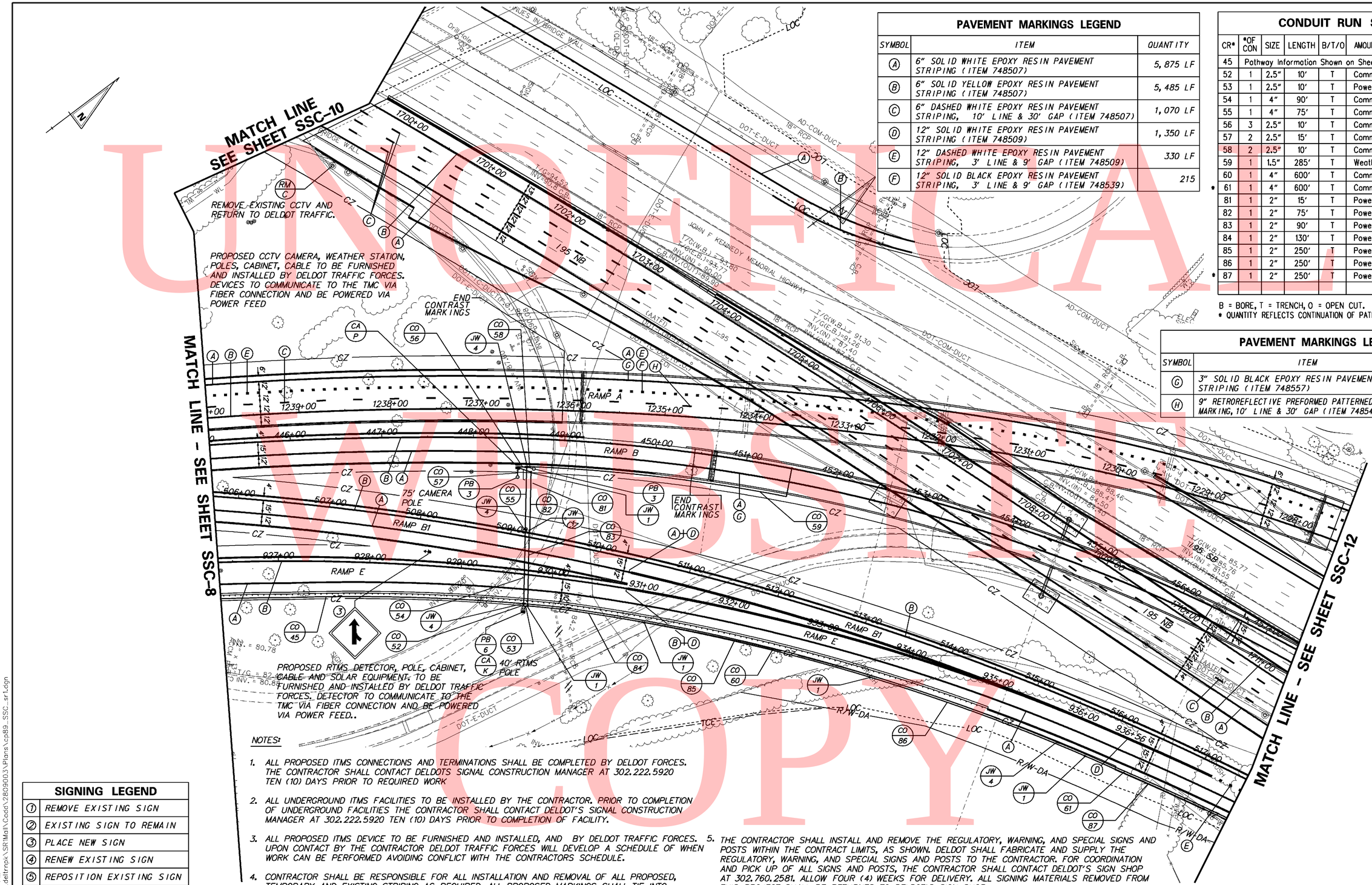

PAVEMENT MARKINGS LEGEND

SYMBOL	ITEM	QUANTITY
(A)	6" SOLID WHITE EPOXY RESIN PAVEMENT STRIPING (ITEM 748507)	5,875 LF
(B)	6" SOLID YELLOW EPOXY RESIN PAVEMENT STRIPING (ITEM 748507)	5,485 LF
(C)	6" DASHED WHITE EPOXY RESIN PAVEMENT STRIPING, 10' LINE & 30' GAP (ITEM 748507)	1,070 LF
(D)	12" SOLID WHITE EPOXY RESIN PAVEMENT STRIPING (ITEM 748509)	1,350 LF
(E)	12" DASHED WHITE EPOXY RESIN PAVEMENT STRIPING, 3' LINE & 9' GAP (ITEM 748509)	330 LF
(F)	12" SOLID BLACK EPOXY RESIN PAVEMENT STRIPING, 3' LINE & 9' GAP (ITEM 748539)	215

CONDUIT RUN SCHEDULE

CR*	#OF CON	SIZE	LENGTH	B/T/O	AMOUNT AND TYPE OF CABLE/ WIRE
45	Pathway Information Shown on Sheet SSC-8				
52	1	2.5"	10'	T	Comm. Cable
53	1	2.5"	10'	T	Power
54	1	4"	90'	T	Comm. Cable
55	1	4"	75'	T	Comm. Cable
56	3	2.5"	10'	T	Comm. Cable
57	2	2.5"	15'	T	Comm. Cable
58	2	2.5"	10'	T	Comm. Cable
59	1	1.5"	285'	T	Weather Sensor
60	1	4"	600'	T	Comm. Cable
* 61	1	4"	600'	T	Comm. Cable
81	1	2"	15'	T	Power
82	1	2"	75'	T	Power
83	1	2"	90'	T	Power
84	1	2"	130'	T	Power
85	1	2"	250'	T	Power
86	1	2"	250'	T	Power
* 87	1	2"	250'	T	Power

B = BORE, T = TRENCH, O = OPEN CUT.
* QUANTITY REFLECTS CONTINUATION OF PATHWAY SHOWN ON SHEET SSC-12

PAVEMENT MARKINGS LEGEND

SYMBOL	ITEM	QUANTITY
(G)	3" SOLID BLACK EPOXY RESIN PAVEMENT STRIPING (ITEM 748557)	850 LF
(H)	9" RETROREFLECTIVE PREFORMED PATTERNED CONTRAST MARKING, 10' LINE & 30' GAP (ITEM 748547)	215 LF

SIGNING LEGEND

(1)	REMOVE EXISTING SIGN
(2)	EXISTING SIGN TO REMAIN
(3)	PLACE NEW SIGN
(4)	RENEW EXISTING SIGN
(5)	REPOSITION EXISTING SIGN

SIGN NOTE:

ALL EXISTING REGULATORY, WARNING, AND SPECIAL SIGNS ASSUMED TO BE REMOVED UNLESS OTHERWISE NOTED.

NOTES:

1. ALL PROPOSED ITMS CONNECTIONS AND TERMINATIONS SHALL BE COMPLETED BY DELDOT FORCES. THE CONTRACTOR SHALL CONTACT DELDOTS SIGNAL CONSTRUCTION MANAGER AT 302.222.5920 TEN (10) DAYS PRIOR TO REQUIRED WORK
2. ALL UNDERGROUND ITMS FACILITIES TO BE INSTALLED BY THE CONTRACTOR. PRIOR TO COMPLETION OF UNDERGROUND FACILITIES THE CONTRACTOR SHALL CONTACT DELDOT'S SIGNAL CONSTRUCTION MANAGER AT 302.222.5920 TEN (10) DAYS PRIOR TO COMPLETION OF FACILITY.
3. ALL PROPOSED ITMS DEVICE TO BE FURNISHED AND INSTALLED, AND BY DELDOT TRAFFIC FORCES. UPON CONTACT BY THE CONTRACTOR DELDOT TRAFFIC FORCES WILL DEVELOP A SCHEDULE OF WHEN WORK CAN BE PERFORMED AVOIDING CONFLICT WITH THE CONTRACTORS SCHEDULE.
4. CONTRACTOR SHALL BE RESPONSIBLE FOR ALL INSTALLATION AND REMOVAL OF ALL PROPOSED, TEMPORARY AND EXISTING STRIPING AS REQUIRED. ALL PROPOSED MARKINGS SHALL TIE INTO EXISTING MARKINGS IN ACCORDANCE WITH THE MUTCD AND AS DIRECTED BY THE DELDOT'S CONSTRUCTION ENGINEER.
5. THE CONTRACTOR SHALL INSTALL AND REMOVE THE REGULATORY, WARNING, AND SPECIAL SIGNS AND POSTS WITHIN THE CONTRACT LIMITS, AS SHOWN. DELDOT SHALL FABRICATE AND SUPPLY THE REGULATORY, WARNING, AND SPECIAL SIGNS AND POSTS TO THE CONTRACTOR. FOR COORDINATION AND PICK UP OF ALL SIGNS AND POSTS, THE CONTRACTOR SHALL CONTACT DELDOT'S SIGN SHOP AT 302.760.2581. ALLOW FOUR (4) WEEKS FOR DELIVERY. ALL SIGNING MATERIALS REMOVED FROM THIS PROJECT SHALL BE RETURNED TO DELDOT'S SIGN SHOP.
6. CONTRACTOR SHALL INSTALL RAISED PAVEMENT MARKERS IN ACCORDANCE WITH THE MUTCD.

UNOFFICIAL WEBSITE COPY

2/16/2011 3:34:54 PM
M:\projects\3*59_delfrnpk\SIRMall\Cadd\2809003\Plans\cp89_SSC_sr1.dgn

DELAWARE
DEPARTMENT OF TRANSPORTATION

ADDENDUMS / REVISIONS	
ADDENDUM NO. 3 THIS SHEET 721A	
REPLACES VOIDED SHEET 721	
02/18/2011, JCR	

SCALE
0 50 100 150
FEET

SR1 / I-95 INTERCHANGE

CONTRACT	BRIDGE NO.
28-090-03	
COUNTY	DESIGNED BY: RK&K
NEW CASTLE	CHECKED BY: JCR

SIGNING, STRIPING & CONDUIT PLAN

SHEET NO.	TOTAL SHTS.
SSC-11	721A
	803

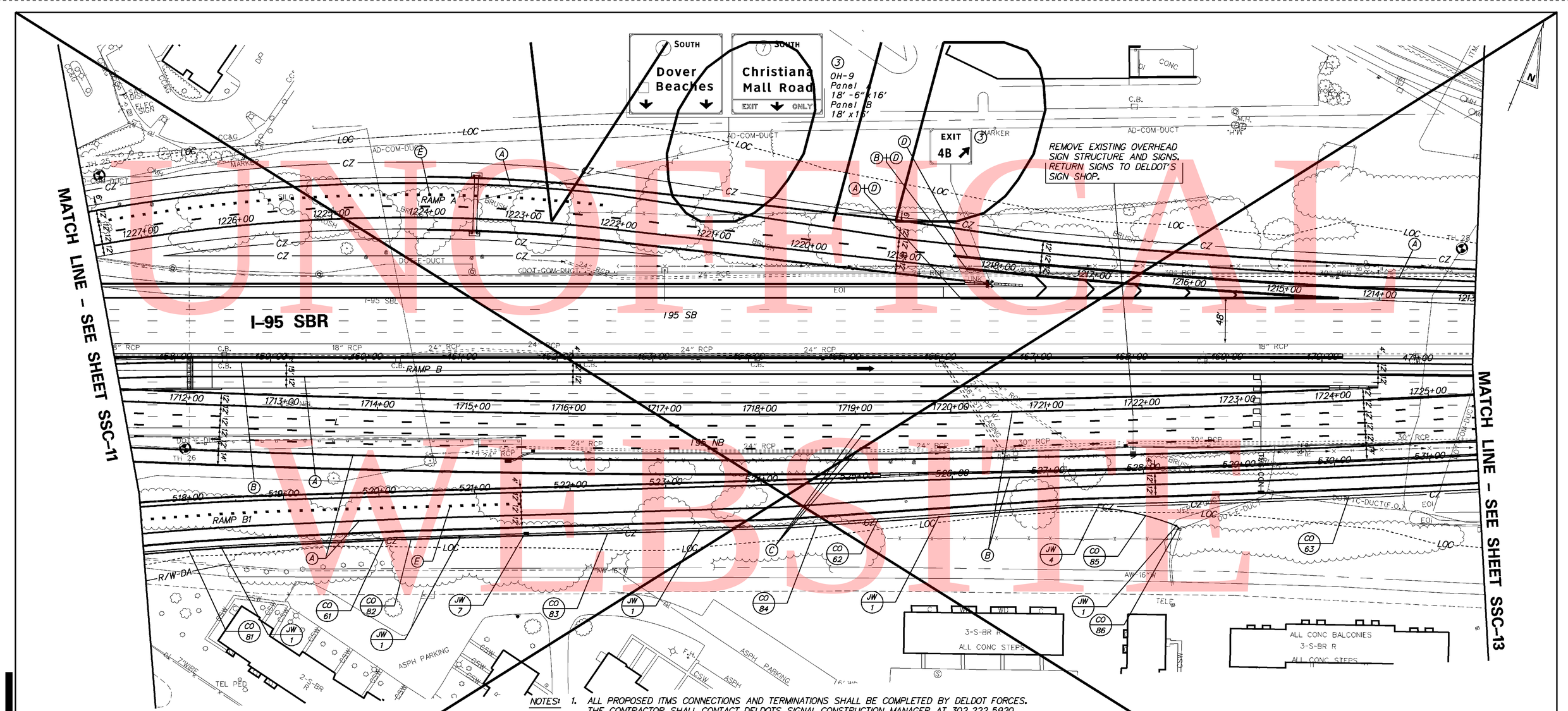

UNOFFICIAL WEBSITE COPY

NOTES:

1. ALL PROPOSED ITMS CONNECTIONS AND TERMINATIONS SHALL BE COMPLETED BY DELDOT FORCES. THE CONTRACTOR SHALL CONTACT DELDOTS SIGNAL CONSTRUCTION MANAGER AT 302.222.5920 TEN (10) DAYS PRIOR TO REQUIRED WORK
2. ALL UNDERGROUND ITMS FACILITIES TO BE INSTALLED BY THE CONTRACTOR. PRIOR TO COMPLETION OF UNDERGROUND FACILITIES THE CONTRACTOR SHALL CONTACT DELDOT'S SIGNAL CONSTRUCTION MANAGER AT 302.222.5920 TEN (10) DAYS PRIOR TO COMPLETION OF FACILITY.
3. CONTRACTOR SHALL BE RESPONSIBLE FOR ALL INSTALLATION AND REMOVAL OF ALL PROPOSED, TEMPORARY AND EXISTING STRIPING AS REQUIRED. ALL PROPOSED MARKINGS SHALL TIE INTO EXISTING MARKINGS IN ACCORDANCE WITH THE MUTCD AND AS DIRECTED BY THE DELDOT'S CONSTRUCTION ENGINEER.
4. THE CONTRACTOR SHALL INSTALL AND REMOVE THE REGULATORY, WARNING, AND SPECIAL SIGNS AND POSTS WITHIN THE CONTRACT LIMITS, AS SHOWN. DELDOT SHALL FABRICATE AND SUPPLY THE REGULATORY, WARNING, AND SPECIAL SIGNS AND POSTS TO THE CONTRACTOR. FOR COORDINATION AND PICK UP OF ALL SIGNS AND POSTS, THE CONTRACTOR SHALL CONTACT DELDOT'S SIGN SHOP AT 302.760.2581. ALLOW FOUR (4) WEEKS FOR DELIVERY. ALL SIGNING MATERIALS REMOVED FROM THIS PROJECT SHALL BE RETURNED TO DELDOT'S SIGN SHOP.
5. ALL EXISTING OVERHEAD AND BRIDGE MOUNTED SIGNS AND STRUCTURES SHALL BE REMOVED BY THE CONTRACTOR WITHIN THE CONTRACT LIMITS UNLESS OTHERWISE NOTED. THE CONTRACTOR SHALL FURNISH AND INSTALL ALL PROPOSED OVERHEADS AND CANTILEVER SIGN STRUCTURES, FOUNDATIONS, AND SIGNS. THE CONTRACTOR SHALL RETURN ALL SIGNS REMOVED FROM THE PROJECT TO DELDOT'S SIGN SHOP. THE CONTRACTOR SHALL CONTACT DELDOT'S SIGN SHOP AT 302.760.2581 TO ARRANGE FOR DELIVERY OF SIGNS.
6. CONTRACTOR SHALL INSTALL RAISED PAVEMENT MARKERS IN ACCORDANCE WITH THE MUTCD.

CONDUIT RUN SCHEDULE

CR*	*OF CON	SIZE	LENGTH	B/T/O	AMOUNT AND TYPE OF CABLE/ WIRE
61	Pathway Information Shown on SSC-11				
62	1	4"	600'	T	Comm. Cable
63	1	4"	600'	T	Comm. Cable
81	Pathway Information Shown on SSC-11				
82	1	2"	250'	T	Power
83	1	2"	250'	T	Power
84	1	2"	250'	T	Power
85	1	2"	250'	T	Power
86	1	2"	10'	T	Power

B = BORE, T = TRENCH, O = OPEN CUT.
* QUANTITY REFLECTS CONTINUATION OF PATHWAY SHOWN ON SHEET SSC-13

SIGNING LEGEND

①	REMOVE EXISTING SIGN
②	EXISTING SIGN TO REMAIN
③	PLACE NEW SIGN
④	RENEW EXISTING SIGN
⑤	REPOSITION EXISTING SIGN

PAVEMENT MARKINGS LEGEND

SYMBOL	ITEM	QUANTITY
Ⓐ	6" SOLID WHITE EPOXY RESIN PAVEMENT STRIPING (ITEM 748507)	6,450 LF
Ⓑ	6" SOLID YELLOW EPOXY RESIN PAVEMENT STRIPING (ITEM 748507)	5,050 LF
Ⓒ	6" DASHED WHITE EPOXY RESIN PAVEMENT STRIPING, 10' LINE & 30' GAP (ITEM 748507)	1,185 LF
Ⓓ	12" SOLID WHITE EPOXY RESIN PAVEMENT STRIPING (ITEM 748509)	1,545 LF
Ⓔ	12" DASHED WHITE EPOXY RESIN PAVEMENT STRIPING, 3' LINE & 9' GAP (ITEM 748509)	235 LF
Ⓕ	12" SOLID WHITE ALKYD THERMOPLASTIC PAVEMENT STRIPING (ITEM 748027)	95 LF
Ⓖ	3" SOLID BLACK EPOXY RESIN PAVEMENT STRIPING (ITEM 748557)	100 LF

SSC-12

DELAWARE
DEPARTMENT OF TRANSPORTATION

ADDENDUMS / REVISIONS

ADDENDUM NO. 3 VOIDED SHEET	
MODIFIED ITMS DESIGN SEE SHEET 722A, 02/18/2011, JCR	

SCALE 0 50 100 150 FEET

SR1 / I-95 INTERCHANGE

CONTRACT	28-090-03	BRIDGE NO.
COUNTY	NEW CASTLE	DESIGNED BY:
		CHECKED BY:

SIGNING, STRIPING & CONDUIT PLAN

SHEET NO.	722
TOTAL SHTS.	803

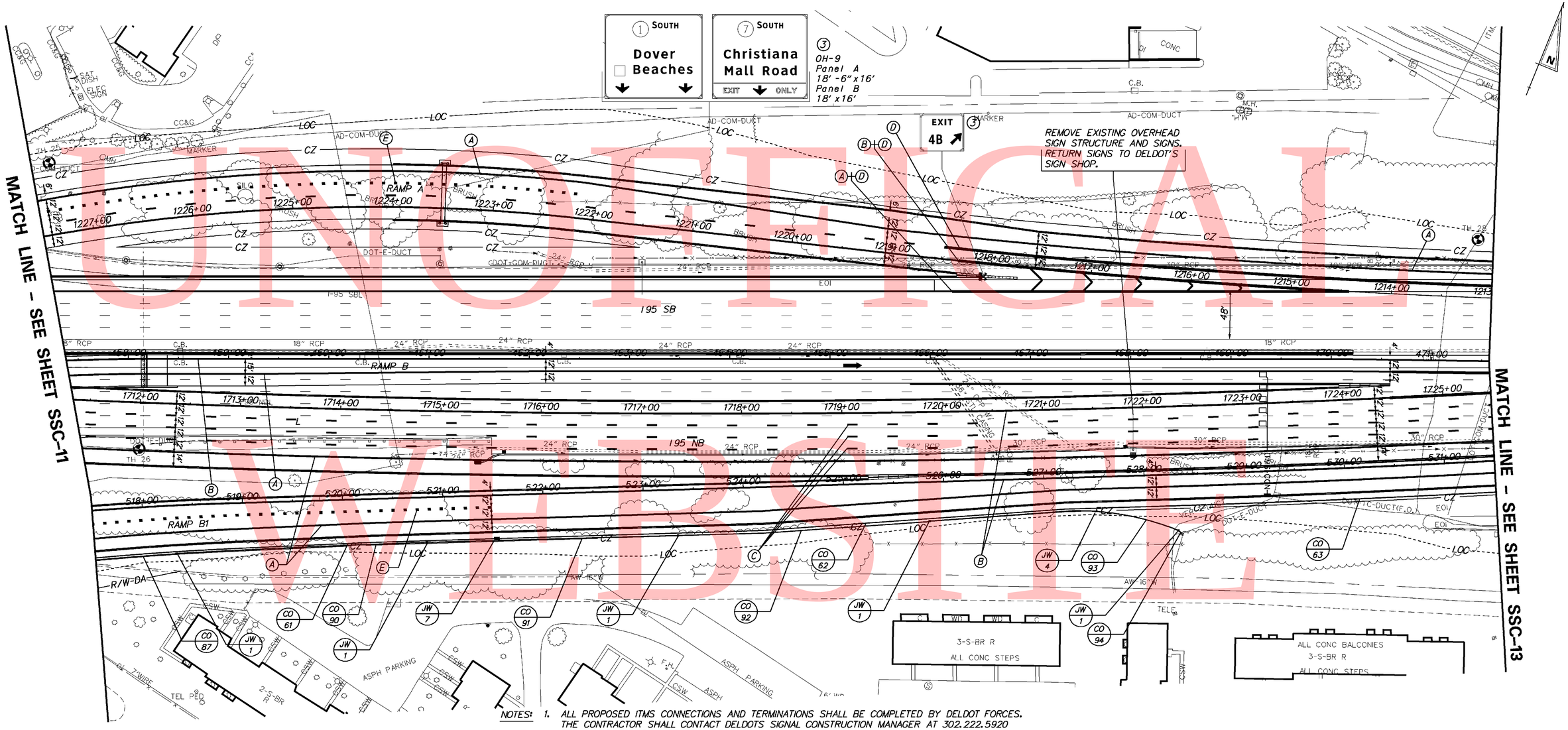

UNOFFICIAL WEBSITE COPY

NOTES:

1. ALL PROPOSED ITMS CONNECTIONS AND TERMINATIONS SHALL BE COMPLETED BY DELDOT FORCES. THE CONTRACTOR SHALL CONTACT DELDOTS SIGNAL CONSTRUCTION MANAGER AT 302.222.5920 TEN (10) DAYS PRIOR TO REQUIRED WORK
2. ALL UNDERGROUND ITMS FACILITIES TO BE INSTALLED BY THE CONTRACTOR. PRIOR TO COMPLETION OF UNDERGROUND FACILITIES THE CONTRACTOR SHALL CONTACT DELDOT'S SIGNAL CONSTRUCTION MANAGER AT 302.222.5920 TEN (10) DAYS PRIOR TO COMPLETION OF FACILITY.
3. CONTRACTOR SHALL BE RESPONSIBLE FOR ALL INSTALLATION AND REMOVAL OF ALL PROPOSED, TEMPORARY AND EXISTING STRIPING AS REQUIRED. ALL PROPOSED MARKINGS SHALL TIE INTO EXISTING MARKINGS IN ACCORDANCE WITH THE MUTCD AND AS DIRECTED BY THE DELDOT'S CONSTRUCTION ENGINEER.
4. THE CONTRACTOR SHALL INSTALL AND REMOVE THE REGULATORY, WARNING, AND SPECIAL SIGNS AND POSTS WITHIN THE CONTRACT LIMITS, AS SHOWN. DELDOT SHALL FABRICATE AND SUPPLY THE REGULATORY, WARNING, AND SPECIAL SIGNS AND POSTS TO THE CONTRACTOR. FOR COORDINATION AND PICK UP OF ALL SIGNS AND POSTS, THE CONTRACTOR SHALL CONTACT DELDOT'S SIGN SHOP AT 302.760.2581. ALLOW FOUR (4) WEEKS FOR DELIVERY. ALL SIGNING MATERIALS REMOVED FROM THIS PROJECT SHALL BE RETURNED TO DELDOT'S SIGN SHOP.
5. ALL EXISTING OVERHEAD AND BRIDGE MOUNTED SIGNS AND STRUCTURES SHALL BE REMOVED BY THE CONTRACTOR WITHIN THE CONTRACT LIMITS UNLESS OTHERWISE NOTED. THE CONTRACTOR SHALL FURNISH AND INSTALL ALL PROPOSED OVERHEADS AND CANTILEVER SIGN STRUCTURES, FOUNDATIONS, AND SIGNS. THE CONTRACTOR SHALL RETURN ALL SIGNS REMOVED FROM THE PROJECT TO DELDOT'S SIGN SHOP. THE CONTRACTOR SHALL CONTACT DELDOT'S SIGN SHOP AT 302.760.2581 TO ARRANGE FOR DELIVERY OF SIGNS.
6. CONTRACTOR SHALL INSTALL RAISED PAVEMENT MARKERS IN ACCORDANCE WITH THE MUTCD.

CONDUIT RUN SCHEDULE

CR*	*OF CON	SIZE	LENGTH	B/T/O	AMOUNT AND TYPE OF CABLE/ WIRE
61	Pathway Information Shown on SSC-11				
62	1	4"	600'	T	Comm. Cable
* 63	1	4"	600'	T	Comm. Cable
87	Pathway Information Shown on SSC-11				
90	1	2"	250'	T	Power
91	1	2"	250'	T	Power
92	1	2"	250'	T	Power
93	1	2"	250'	T	Power
94	1	2"	10'	T	Power

B = BORE, T = TRENCH, O = OPEN CUT.
* QUANTITY REFLECTS CONTINUATION OF PATHWAY SHOWN ON SHEET SSC-13

SIGNING LEGEND

(1)	REMOVE EXISTING SIGN
(2)	EXISTING SIGN TO REMAIN
(3)	PLACE NEW SIGN
(4)	RENEW EXISTING SIGN
(5)	REPOSITION EXISTING SIGN

PAVEMENT MARKINGS LEGEND

SYMBOL	ITEM	QUANTITY
(A)	6" SOLID WHITE EPOXY RESIN PAVEMENT STRIPING (ITEM 748507)	6,450 LF
(B)	6" SOLID YELLOW EPOXY RESIN PAVEMENT STRIPING (ITEM 748507)	5,050 LF
(C)	6" DASHED WHITE EPOXY RESIN PAVEMENT STRIPING, 10' LINE & 30' GAP (ITEM 748507)	1,185 LF
(D)	12" SOLID WHITE EPOXY RESIN PAVEMENT STRIPING (ITEM 748509)	1,545 LF
(E)	12" DASHED WHITE EPOXY RESIN PAVEMENT STRIPING, 3' LINE & 9' GAP (ITEM 748509)	235 LF
(F)	12" SOLID WHITE ALKYD THERMOPLASTIC PAVEMENT STRIPING (ITEM 748027)	95 LF
(G)	3" SOLID BLACK EPOXY RESIN PAVEMENT STRIPING (ITEM 748557)	100 LF

DELAWARE
DEPARTMENT OF TRANSPORTATION

ADDENDUMS / REVISIONS

ADDENDUM NO. 3 THIS SHEET 722A	
REPLACES VOIDED SHEET 722	
02/18/2011, JCR	

SCALE
0 50 100 150
FEET

SR1 / I-95 INTERCHANGE

CONTRACT	28-090-03
COUNTY	NEW CASTLE
BRIDGE NO.	
DESIGNED BY: RK&K	
CHECKED BY: JCR	

SIGNING, STRIPING & CONDUIT PLAN

SSC-12

SHEET NO.	722A
TOTAL SHTS.	803

2/16/2011 3:47:11 PM
M:\PROJECTS\2003\03059_DELTRNPK\SR1MALL\CADD\2809003\PLANS\CP90_SSC_SR.DGN

UNOFFICIAL WEBSITE COPY

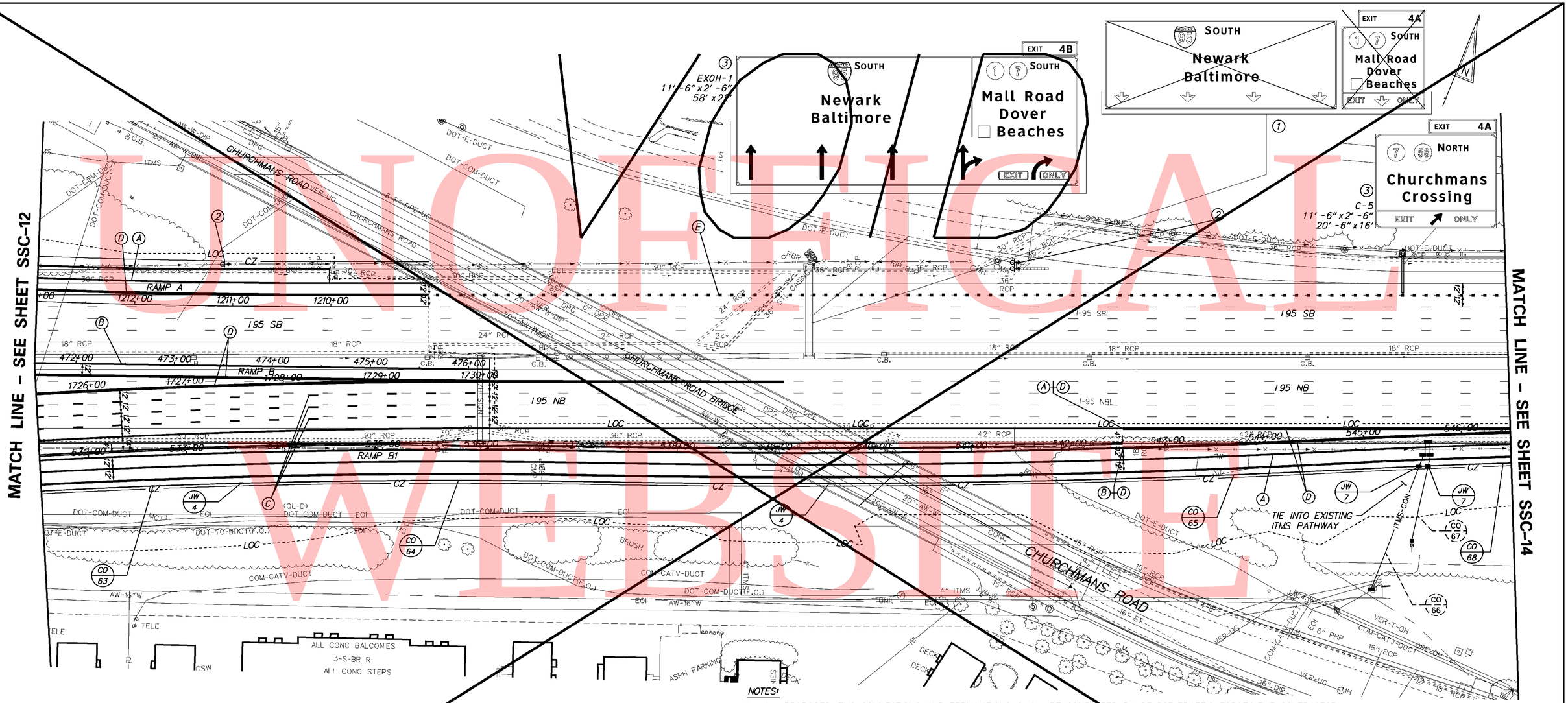

CONDUIT RUN SCHEDULE

CR*	*OF CON	SIZE	LENGTH	B/T/O	AMOUNT AND TYPE OF CABLE/ WIRE
63	Pathway Information Shown on Sheet SSC-12				
64	1	4"	600'	T	Comm. Cable
65	1	4"	600'	T	Comm. Cable
* 66	1	4"	150'	T	Comm. Cable
* 67	1	4"	90'	T	Comm. Cable
** 68	1	4"	625'	T	Comm. Cable

B = BORE, T = TRENCH, O = OPEN CUT.
* DENOTES EXISTING
** QUANTITY REFLECTS CONTINUATION OF PATHWAY SHOWN ON SHEET SSC-14

PAVEMENT MARKINGS LEGEND

SYMBOL	ITEM	QUANTITY
(A)	6" SOLID WHITE EPOXY RESIN PAVEMENT STRIPING (ITEM 748507)	3,000 LF
(B)	6" SOLID YELLOW EPOXY RESIN PAVEMENT STRIPING (ITEM 748507)	1,565 LF
(C)	6" DASHED WHITE EPOXY RESIN PAVEMENT STRIPING, 10' LINE & 30' GAP (ITEM 748507)	350 LF
(D)	12" SOLID WHITE EPOXY RESIN PAVEMENT STRIPING (ITEM 748509)	2,430 LF
(E)	12" DASHED WHITE EPOXY RESIN PAVEMENT STRIPING, 3' LINE & 9' GAP (ITEM 748509)	275 LF

NOTES:

1. ALL PROPOSED ITMS CONNECTIONS AND TERMINATIONS SHALL BE COMPLETED BY DELDOT TRAFFIC FORCES. THE CONTRACTOR SHALL CONTACT DELDOTS SIGNAL CONSTRUCTION MANAGER AT 302.222.5920 TEN (10) DAYS PRIOR TO REQUIRED WORK
2. ALL UNDERGROUND ITMS FACILITIES TO BE INSTALLED BY THE CONTRACTOR. PRIOR TO COMPLETION OF UNDERGROUND FACILITIES THE CONTRACTOR SHALL CONTACT DELDOT'S SIGNAL CONSTRUCTION MANAGER AT 302.222.5920 TEN (10) DAYS PRIOR TO COMPLETION OF FACILITY.
3. ALL PROPOSED ITMS DEVICE TO BE FURNISHED AND INSTALLED BY DELDOT TRAFFIC FORCES. UPON CONTACT BY THE CONTRACTOR DELDOT TRAFFIC FORCES WILL DEVELOP A SCHEDULE OF WHEN WORK CAN BE PERFORMED AVOIDING CONFLICTS WITH THE GENERAL CONTRACTORS SCHEDULE.
4. CONTRACTOR SHALL BE RESPONSIBLE FOR ALL INSTALLATION AND REMOVAL OF ALL PROPOSED, TEMPORARY AND EXISTING MARKINGS AS REQUIRED. ALL PROPOSED MARKINGS SHALL TIE INTO EXISTING MARKINGS IN ACCORDANCE WITH THE MUTCD AND AS DIRECTED BY THE DELDOT'S CONSTRUCTION ENGINEER.
5. THE CONTRACTOR SHALL INSTALL AND REMOVE THE REGULATORY, WARNING, AND SPECIAL SIGNS AND POSTS WITHIN THE CONTRACT LIMITS, AS SHOWN. DELDOT SHALL FABRICATE AND SUPPLY THE REGULATORY, WARNING, AND SPECIAL SIGNS AND POSTS TO THE CONTRACTOR. FOR COORDINATION AND PICK UP OF ALL SIGNS AND POSTS, THE CONTRACTOR SHALL CONTACT DELDOT'S SIGN SHOP AT 302.760.2581. ALLOW FOUR (4) WEEKS FOR DELIVERY. ALL SIGNING MATERIALS REMOVED FROM THIS PROJECT SHALL BE RETURNED TO DELDOT'S SIGN SHOP.
6. ALL EXISTING OVERHEAD AND BRIDGE MOUNTED SIGNS AND STRUCTURES SHALL BE REMOVED BY THE CONTRACTOR WITHIN THE CONTRACT LIMITS UNLESS OTHERWISE NOTED. THE CONTRACTOR SHALL FURNISH AND INSTALL ALL PROPOSED OVERHEADS AND CANTILEVER SIGN STRUCTURES, FOUNDATIONS, AND SIGNS. THE CONTRACTOR SHALL RETURN ALL SIGNS REMOVED FROM THE PROJECT TO DELDOT'S SIGN SHOP. THE CONTRACTOR SHALL CONTACT DELDOT'S SIGN SHOP AT 302.760.2581 TO ARRANGE FOR DELIVERY OF SIGNS.
7. THE CONTRACTOR SHALL INSTALL RAISED PAVEMENT MARKERS WITHIN THE PROJECT LIMITS IN ACCORDANCE WITH THE DE-MUTCD.

SIGNING LEGEND

(1)	REMOVE EXISTING SIGN
(2)	EXISTING SIGN TO REMAIN
(3)	PLACE NEW SIGN
(4)	RENEW EXISTING SIGN
(5)	REPOSITION EXISTING SIGN

SSC-13

DELAWARE DEPARTMENT OF TRANSPORTATION

ADDENDUMS / REVISIONS
ADDENDUM NO. 3 , VOIDED SHEET 723
MODIFIED ITMS DESIGN SEE SHEET 723A,
2/17/11 JCR

SCALE 0 50 100 150 FEET

SR1 / I-95 INTERCHANGE

CONTRACT	28-090-03
COUNTY	NEW CASTLE
BRIDGE NO.	
DESIGNED BY:	
CHECKED BY:	

SIGNING, STRIPING & CONDUIT PLAN

SHEET NO.	723
TOTAL SHTS.	803

PROPOSED RTMS DETECTOR, POLE, CABINET, CABLE AND SOLAR EQUIPMENT. TO BE FURNISHED AND INSTALLED BY DELDOT TRAFFIC FORCES. DETECTOR TO COMMUNICATE TO THE TMC VIA FIBER CONNECTION AND BE POWERED VIA SOLAR POWER.

PROPOSED SIGN TO BE INSTALLED ONTO EXISTING STRUCTURE

③ EXOH-1
11′-6″ x 2′-6″
58′ x 22′

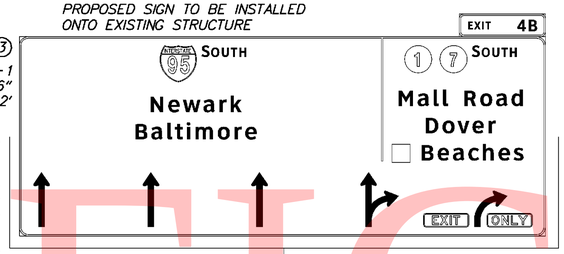

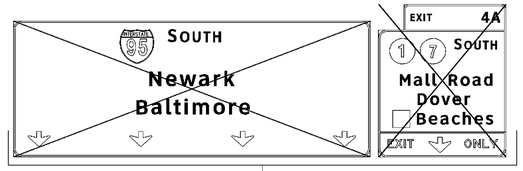

EXISTING SIGNS TO BE REMOVED AND RETURNED TO DELDOT'S SIGN SHOP. EXISTING STRUCTURE TO REMAIN.

③ C-5
11′-6″ x 2′-6″
20′-6″ x 16′

MATCH LINE – SEE SHEET SSC-12

MATCH LINE – SEE SHEET SSC-14

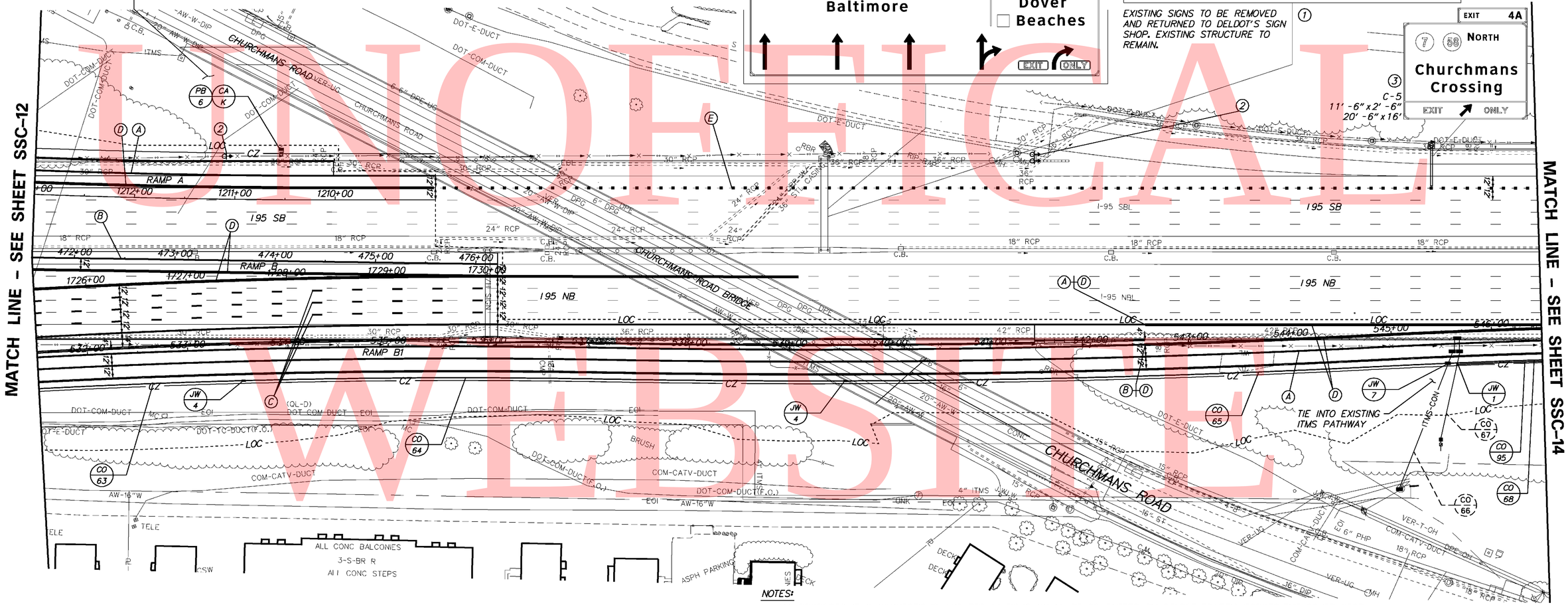

NOTES:

1. ALL PROPOSED ITMS CONNECTIONS AND TERMINATIONS SHALL BE COMPLETED BY DELDOT TRAFFIC FORCES. THE CONTRACTOR SHALL CONTACT DELDOTS SIGNAL CONSTRUCTION MANAGER AT 302.222.5920 TEN (10) DAYS PRIOR TO REQUIRED WORK
2. ALL UNDERGROUND ITMS FACILITIES TO BE INSTALLED BY THE CONTRACTOR. PRIOR TO COMPLETION OF UNDERGROUND FACILITIES THE CONTRACTOR SHALL CONTACT DELDOT'S SIGNAL CONSTRUCTION MANAGER AT 302.222.5920 TEN (10) DAYS PRIOR TO COMPLETION OF FACILITY.
3. ALL PROPOSED ITMS DEVICE TO BE FURNISHED AND INSTALLED BY DELDOT TRAFFIC FORCES. UPON CONTACT BY THE CONTRACTOR DELDOT TRAFFIC FORCES WILL DEVELOP A SCHEDULE OF WHEN WORK CAN BE PERFORMED AVOIDING CONFLICTS WITH THE GENERAL CONTRACTORS SCHEDULE.
4. CONTRACTOR SHALL BE RESPONSIBLE FOR ALL INSTALLATION AND REMOVAL OF ALL PROPOSED, TEMPORARY AND EXISTING MARKINGS AS REQUIRED. ALL PROPOSED MARKINGS SHALL TIE INTO EXISTING MARKINGS IN ACCORDANCE WITH THE MUTCD AND AS DIRECTED BY THE DELDOT'S CONSTRUCTION ENGINEER.
5. THE CONTRACTOR SHALL INSTALL AND REMOVE THE REGULATORY, WARNING, AND SPECIAL SIGNS AND POSTS WITHIN THE CONTRACT LIMITS, AS SHOWN. DELDOT SHALL FABRICATE AND SUPPLY THE REGULATORY, WARNING, AND SPECIAL SIGNS AND POSTS TO THE CONTRACTOR. FOR COORDINATION AND PICK UP OF ALL SIGNS AND POSTS, THE CONTRACTOR SHALL CONTACT DELDOT'S SIGN SHOP AT 302.760.2581. ALLOW FOUR (4) WEEKS FOR DELIVERY. ALL SIGNING MATERIALS REMOVED FROM THIS PROJECT SHALL BE RETURNED TO DELDOT'S SIGN SHOP.
6. ALL EXISTING OVERHEAD AND BRIDGE MOUNTED SIGNS AND STRUCTURES SHALL BE REMOVED BY THE CONTRACTOR WITHIN THE CONTRACT LIMITS UNLESS OTHERWISE NOTED. THE CONTRACTOR SHALL FURNISH AND INSTALL ALL PROPOSED OVERHEADS AND CANTILEVER SIGN STRUCTURES, FOUNDATIONS, AND SIGNS. THE CONTRACTOR SHALL RETURN ALL SIGNS REMOVED FROM THE PROJECT TO DELDOT'S SIGN SHOP. THE CONTRACTOR SHALL CONTACT DELDOT'S SIGN SHOP AT 302.760.2581 TO ARRANGE FOR DELIVERY OF SIGNS.
7. THE CONTRACTOR SHALL INSTALL RAISED PAVEMENT MARKERS WITHIN THE PROJECT LIMITS IN ACCORDANCE WITH THE DE-MUTCD.

CONDUIT RUN SCHEDULE

	CR*	#OF CON	SIZE	LENGTH	B/T/O	AMOUNT AND TYPE OF CABLE/ WIRE
	63	Pathway Information Shown on Sheet SSC-12				
	64	1	4″	600′	T	Comm. Cable
	65	1	4″	600′	T	Comm. Cable
*	66	1	4″	150′	T	Comm. Cable
*	67	1	4″	90′	T	Comm. Cable
**	68	1	4″	625′	T	Comm. Cable
**	95	1	2″	250′	T	Power

B = BORE, T = TRENCH, O = OPEN CUT.
* DENOTES EXISTING
** QUANTITY REFLECTS CONTINUATION OF PATHWAY SHOWN ON SHEET SSC-14

PAVEMENT MARKINGS LEGEND

SYMBOL	ITEM	QUANTITY
(A)	6″ SOLID WHITE EPOXY RESIN PAVEMENT STRIPING (ITEM 748507)	3,000 LF
(B)	6″ SOLID YELLOW EPOXY RESIN PAVEMENT STRIPING (ITEM 748507)	1,565 LF
(C)	6″ DASHED WHITE EPOXY RESIN PAVEMENT STRIPING, 10′ LINE & 30′ GAP (ITEM 748507)	350 LF
(D)	12″ SOLID WHITE EPOXY RESIN PAVEMENT STRIPING (ITEM 748509)	2,430 LF
(E)	12″ DASHED WHITE EPOXY RESIN PAVEMENT STRIPING, 3′ LINE & 9′ GAP (ITEM 748509)	275 LF

SIGNING LEGEND

①	REMOVE EXISTING SIGN
②	EXISTING SIGN TO REMAIN
③	PLACE NEW SIGN
④	RENEW EXISTING SIGN
⑤	REPOSITION EXISTING SIGN

UNOFFICIAL WEBSITE COPY

2/15/2011 11:39:30 PM
M:\PROJECTS\53*59_DELTRN\PK\SR1MALL\CADD\2809003\PLANS\CP91_SSC_SR1.DGN

DELAWARE
DEPARTMENT OF TRANSPORTATION

ADDENDUMS / REVISIONS	
ADDENDUM NO. 3 THIS SHEET 723A	
REPLACES VOIDED SHEET 723	
02/18/2011, JCR	

SCALE
0 50 100 150
FEET

SR1 / I-95 INTERCHANGE

CONTRACT	BRIDGE NO.
28-090-03	
COUNTY	DESIGNED BY: RK&K
NEW CASTLE	CHECKED BY: JCR

SIGNING, STRIPING & CONDUIT PLAN

SSC-13

SHEET NO.	TOTAL SHTS.
723A	803

UNOFFICIAL WEBSITE COPY

SIGNING LEGEND	
①	REMOVE EXISTING SIGN
②	EXISTING SIGN TO REMAIN
③	PLACE NEW SIGN
④	RENEW EXISTING SIGN
⑤	REPOSITION EXISTING SIGN

SIGN NOTE:

ALL EXISTING REG/WARN SIGNS THIS SHEET TO REMAIN.

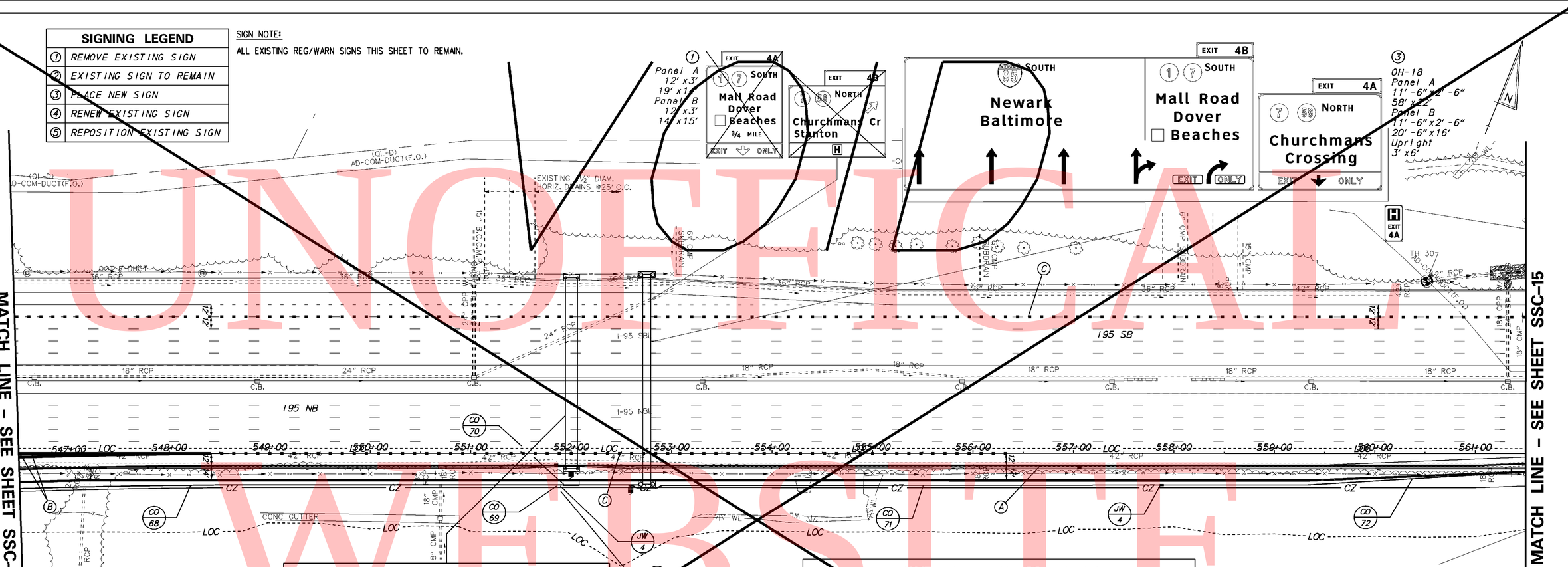

PAVEMENT MARKINGS LEGEND		
SYMBOL	ITEM	QUANTITY
Ⓐ	6" SOLID WHITE EPOXY RESIN PAVEMENT STRIPING (ITEM 748507)	1505 LF
Ⓑ	12" SOLID WHITE EPOXY RESIN PAVEMENT STRIPING (ITEM 748509)	380 LF
Ⓒ	12" DASHED WHITE EPOXY RESIN PAVEMENT STRIPING, 3' LINE & 9' GAP (ITEM 748509)	575 LF

NOTES:

1. ALL PROPOSED ITMS CONNECTIONS AND TERMINATIONS SHALL BE COMPLETED BY DELDOT TRAFFIC FORCES. THE CONTRACTOR SHALL CONTACT DELDOTS SIGNAL CONSTRUCTION MANAGER AT 302.222.5920 TEN (10) DAYS PRIOR TO REQUIRED WORK
2. ALL UNDERGROUND ITMS FACILITIES TO BE INSTALLED BY THE CONTRACTOR. PRIOR TO COMPLETION OF UNDERGROUND FACILITIES THE CONTRACTOR SHALL CONTACT DELDOT'S SIGNAL CONSTRUCTION MANAGER AT 302.222.5920 TEN (10) DAYS PRIOR TO COMPLETION OF FACILITY.
3. ALL PROPOSED ITMS DEVICE TO BE FURNISHED AND INSTALLED BY DELDOT TRAFFIC FORCES. UPON CONTACT BY THE CONTRACTOR DELDOT TRAFFIC FORCES WILL DEVELOP A SCHEDULE OF WHEN WORK CAN BE PERFORMED AVOIDING CONFLICTS WITH THE GENERAL CONTRACTORS SCHEDULE.
4. CONTRACTOR SHALL BE RESPONSIBLE FOR ALL INSTALLATION AND REMOVAL OF ALL PROPOSED, TEMPORARY AND EXISTING MARKINGS AS REQUIRED. ALL PROPOSED MARKINGS SHALL TIE INTO EXISTING MARKINGS IN ACCORDANCE WITH THE MUTCD AND AS DIRECTED BY THE DELDOT'S CONSTRUCTION ENGINEER.
5. THE CONTRACTOR SHALL INSTALL AND REMOVE THE REGULATORY, WARNING, AND SPECIAL SIGNS AND POSTS WITHIN THE CONTRACT LIMITS, AS SHOWN. DELDOT SHALL FABRICATE AND SUPPLY THE REGULATORY, WARNING, AND SPECIAL SIGNS AND POSTS TO THE CONTRACTOR. FOR COORDINATION AND PICK UP OF ALL SIGNS AND POSTS, THE CONTRACTOR SHALL CONTACT DELDOT'S SIGN SHOP AT 302.760.2581. ALLOW FOUR (4) WEEKS FOR DELIVERY. ALL SIGNING MATERIALS REMOVED FROM THIS PROJECT SHALL BE RETURNED TO DELDOT'S SIGN SHOP.
6. ALL EXISTING OVERHEAD AND BRIDGE MOUNTED SIGNS AND STRUCTURES SHALL BE REMOVED BY THE CONTRACTOR WITHIN THE CONTRACT LIMITS UNLESS OTHERWISE NOTED. THE CONTRACTOR SHALL FURNISH AND INSTALL ALL PROPOSED OVERHEADS AND CANTILEVER SIGN STRUCTURES, FOUNDATIONS, AND SIGNS. THE CONTRACTOR SHALL RETURN ALL SIGNS REMOVED FROM THE PROJECT TO DELDOT'S SIGN SHOP. THE CONTRACTOR SHALL CONTACT DELDOT'S SIGN SHOP AT 302.760.2581 TO ARRANGE FOR DELIVERY OF SIGNS.
7. THE CONTRACTOR SHALL INSTALL RAISED PAVEMENT MARKERS WITHIN THE PROJECT LIMITS IN ACCORDANCE WITH THE DE-MUTCD.

CONDUIT RUN SCHEDULE					
CR*	*OF CON	SIZE	LENGTH	B/T/O	AMOUNT AND TYPE OF CABLE/ WIRE
68	Pathway Information Shown on Sheet SSC-13				
69	1	4"	5'	T	Comm. Cable
70	1	4"	10'	T	Comm. Cable
71	1	4"	600'	T	Comm. Cable
* 72	1	4"	450'	T	Comm. Cable

B = BORE, T = TRENCH, O = OPEN CUT.
* QUANTITY REFLECTS CONTINUATION OF PATHWAY SHOWN ON SHEET SSC-15

SSC-14

DELAWARE DEPARTMENT OF TRANSPORTATION

ADDENDUMS / REVISIONS	
ADDENDUM NO. 3 , VOIDED SHEET 724	
MODIFIED ITMS DESIGN SEE SHEET 724A,	
2/17/11 JCR	

SCALE 0 50 100 150 FEET

SR1 / I-95 INTERCHANGE

CONTRACT	BRIDGE NO.
28-090-03	DESIGNED BY:
COUNTY	CHECKED BY:
NEW CASTLE	

SIGNING, STRIPING & CONDUIT PLAN

SHEET NO.	724
TOTAL SHTS.	803

SIGNING LEGEND	
①	REMOVE EXISTING SIGN
②	EXISTING SIGN TO REMAIN
③	PLACE NEW SIGN
④	RENEW EXISTING SIGN
⑤	REPOSITION EXISTING SIGN

SIGN NOTE:

ALL EXISTING REG/WARN SIGNS THIS SHEET TO REMAIN.

REMOVE EXISTING OVERHEAD SIGN STRUCTURE AND SIGNS. RETURN SIGNS TO DELDOT'S SIGN SHOP.

① Panel A 12' x3' 19' x14' Panel B 12' x3' 14' x15'

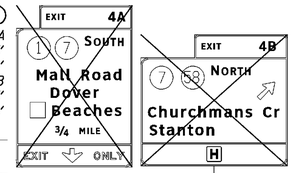

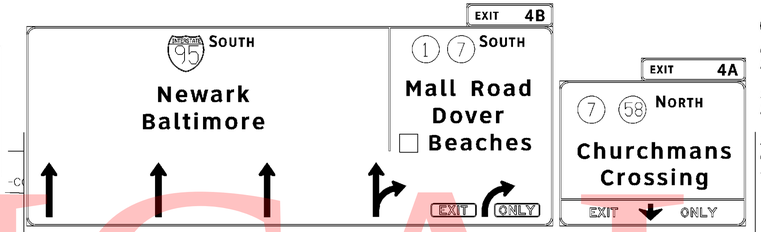

③ OH-18 Panel A 11'-6"x2'-6" 58' x22' Panel B 11'-6"x2'-6" 20'-6"x16' Upright 3' x6'

PRIOR TO STRUCTURE ERECTION CONTRACTOR SHALL INSTALL 1 1"2" FLEXIBLE METALLIC LIQUID TIGHT CONDUIT ALONG THE FULL LENGTH OF STRUCTURE ARM FOR DELDOT TRAFFICS USE. A 2 1"2" RISER SHALL ALSO BE INSTALLED ON THE STRUCTURE UP- RIGHT.

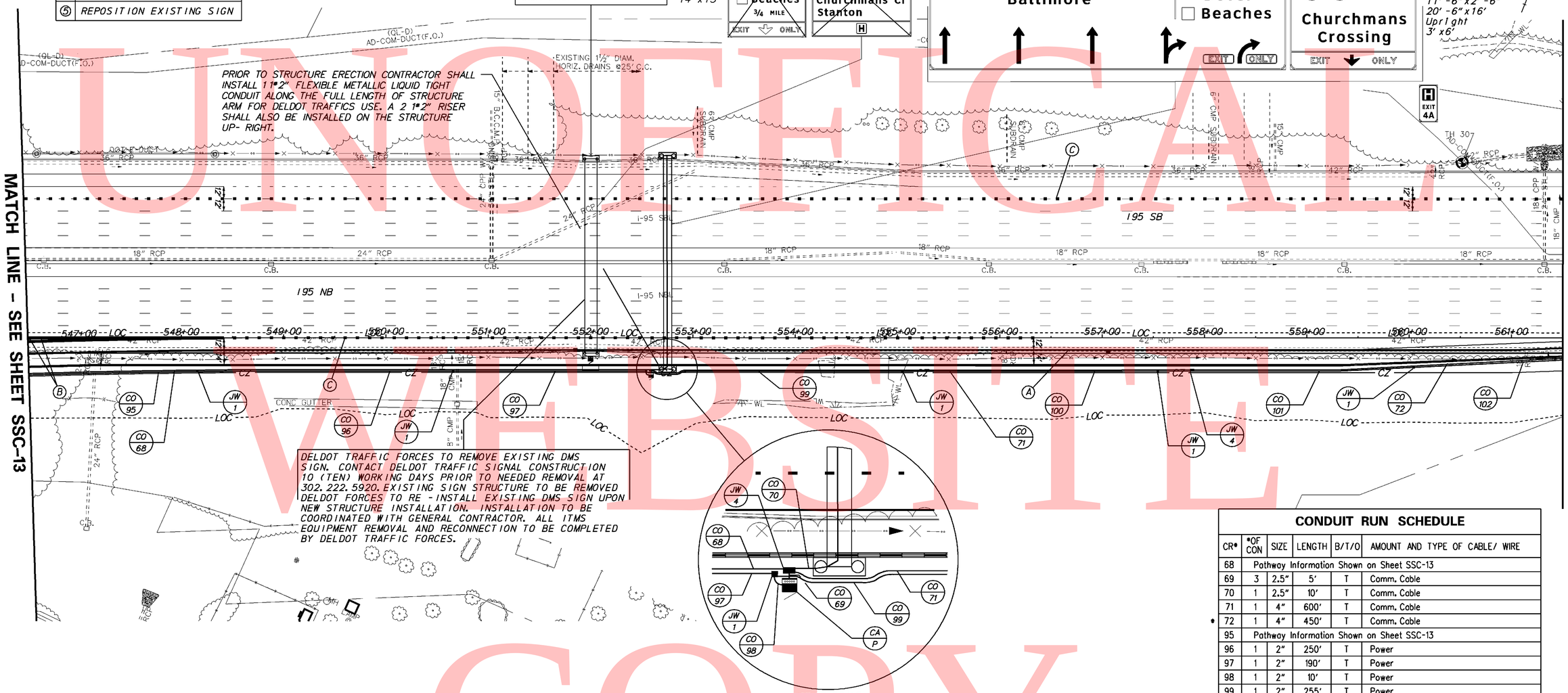

DELDOT TRAFFIC FORCES TO REMOVE EXISTING DMS SIGN. CONTACT DELDOT TRAFFIC SIGNAL CONSTRUCTION 10 (TEN) WORKING DAYS PRIOR TO NEEDED REMOVAL AT 302.222.5920. EXISTING SIGN STRUCTURE TO BE REMOVED DELDOT FORCES TO RE-INSTALL EXISTING DMS SIGN UPON NEW STRUCTURE INSTALLATION. INSTALLATION TO BE COORDINATED WITH GENERAL CONTRACTOR. ALL ITMS EQUIPMENT REMOVAL AND RECONNECTION TO BE COMPLETED BY DELDOT TRAFFIC FORCES.

NOT TO SCALE

CONDUIT RUN SCHEDULE

CR*	*OF CON	SIZE	LENGTH	B/T/O	AMOUNT AND TYPE OF CABLE/ WIRE
68	Pathway Information Shown on Sheet SSC-13				
69	3	2.5"	5'	T	Comm. Cable
70	1	2.5"	10'	T	Comm. Cable
71	1	4"	600'	T	Comm. Cable
* 72	1	4"	450'	T	Comm. Cable
95	Pathway Information Shown on Sheet SSC-13				
96	1	2"	250'	T	Power
97	1	2"	190'	T	Power
98	1	2"	10'	T	Power
99	1	2"	255'	T	Power
100	1	2"	250'	T	Power
101	1	2"	250'	T	Power
* 102	1	2"	230'	T	Power

B = BORE, T = TRENCH, O = OPEN CUT.
* QUANTITY REFLECTS CONTINUATION OF PATHWAY SHOWN ON SHEET SSC-15

PAVEMENT MARKINGS LEGEND

SYMBOL	ITEM	QUANTITY
(A)	6" SOLID WHITE EPOXY RESIN PAVEMENT STRIPING (ITEM 748507)	1505 LF
(B)	12" SOLID WHITE EPOXY RESIN PAVEMENT STRIPING (ITEM 748509)	380 LF
(C)	12" DASHED WHITE EPOXY RESIN PAVEMENT STRIPING, 3' LINE & 9' GAP (ITEM 748509)	575 LF

NOTES:

1. ALL PROPOSED ITMS CONNECTIONS AND TERMINATIONS SHALL BE COMPLETED BY DELDOT TRAFFIC FORCES. THE CONTRACTOR SHALL CONTACT DELDOTS SIGNAL CONSTRUCTION MANAGER AT 302.222.5920 TEN (10) DAYS PRIOR TO REQUIRED WORK
2. ALL UNDERGROUND ITMS FACILITIES TO BE INSTALLED BY THE CONTRACTOR. PRIOR TO COMPLETION OF UNDERGROUND FACILITIES THE CONTRACTOR SHALL CONTACT DELDOT'S SIGNAL CONSTRUCTION MANAGER AT 302.222.5920 TEN (10) DAYS PRIOR TO COMPLETION OF FACILITY.
3. ALL PROPOSED ITMS DEVICE TO BE FURNISHED AND INSTALLED BY DELDOT TRAFFIC FORCES. UPON CONTACT BY THE CONTRACTOR DELDOT TRAFFIC FORCES WILL DEVELOP A SCHEDULE OF WHEN WORK CAN BE PERFORMED AVOIDING CONFLICTS WITH THE GENERAL CONTRACTORS SCHEDULE.
4. CONTRACTOR SHALL BE RESPONSIBLE FOR ALL INSTALLATION AND REMOVAL OF ALL PROPOSED, TEMPORARY AND EXISTING MARKINGS AS REQUIRED. ALL PROPOSED MARKINGS SHALL TIE INTO EXISTING MARKINGS IN ACCORDANCE WITH THE MUTCD AND AS DIRECTED BY THE DELDOT'S CONSTRUCTION ENGINEER.
5. THE CONTRACTOR SHALL INSTALL AND REMOVE THE REGULATORY, WARNING, AND SPECIAL SIGNS AND POSTS WITHIN THE CONTRACT LIMITS, AS SHOWN. DELDOT SHALL FABRICATE AND SUPPLY THE REGULATORY, WARNING, AND SPECIAL SIGNS AND POSTS TO THE CONTRACTOR. FOR COORDINATION AND PICK UP OF ALL SIGNS AND POSTS, THE CONTRACTOR SHALL CONTACT DELDOT'S SIGN SHOP AT 302.760.2581. ALLOW FOUR (4) WEEKS FOR DELIVERY. ALL SIGNING MATERIALS REMOVED FROM THIS PROJECT SHALL BE RETURNED TO DELDOT'S SIGN SHOP.
6. ALL EXISTING OVERHEAD AND BRIDGE MOUNTED SIGNS AND STRUCTURES SHALL BE REMOVED BY THE CONTRACTOR WITHIN THE CONTRACT LIMITS UNLESS OTHERWISE NOTED. THE CONTRACTOR SHALL FURNISH AND INSTALL ALL PROPOSED OVERHEADS AND CANTILEVER SIGN STRUCTURES, FOUNDATIONS, AND SIGNS. THE CONTRACTOR SHALL RETURN ALL SIGNS REMOVED FROM THE PROJECT TO DELDOT'S SIGN SHOP. THE CONTRACTOR SHALL CONTACT DELDOT'S SIGN SHOP AT 302.760.2581 TO ARRANGE FOR DELIVERY OF SIGNS.
7. THE CONTRACTOR SHALL INSTALL RAISED PAVEMENT MARKERS WITHIN THE PROJECT LIMITS IN ACCORDANCE WITH THE DE-MUTCD.

UNOFFICIAL WEBSITE COPY

2/16/2011 4:41:55 PM
M:\PROJECTS\3459_DELTRNPK\SR1MALL\CADD\2809003\PLANS\CP92_SSC_SR1.DGN

DELAWARE DEPARTMENT OF TRANSPORTATION

ADDENDUMS / REVISIONS	
ADDENDUM NO. 3 THIS SHEET 724A	
REPLACES VOIDED SHEET 724	
02/18/2011, JCR	

SCALE 0 50 100 150 FEET

SR1 / I-95 INTERCHANGE

CONTRACT	BRIDGE NO.
28-090-03	
COUNTY	DESIGNED BY: RK&K
NEW CASTLE	CHECKED BY: JCR

SIGNING, STRIPING & CONDUIT PLAN

SSC-14	
SHEET NO.	724A
TOTAL SHTS.	803

UNOFFICIAL WEBSITE COPY

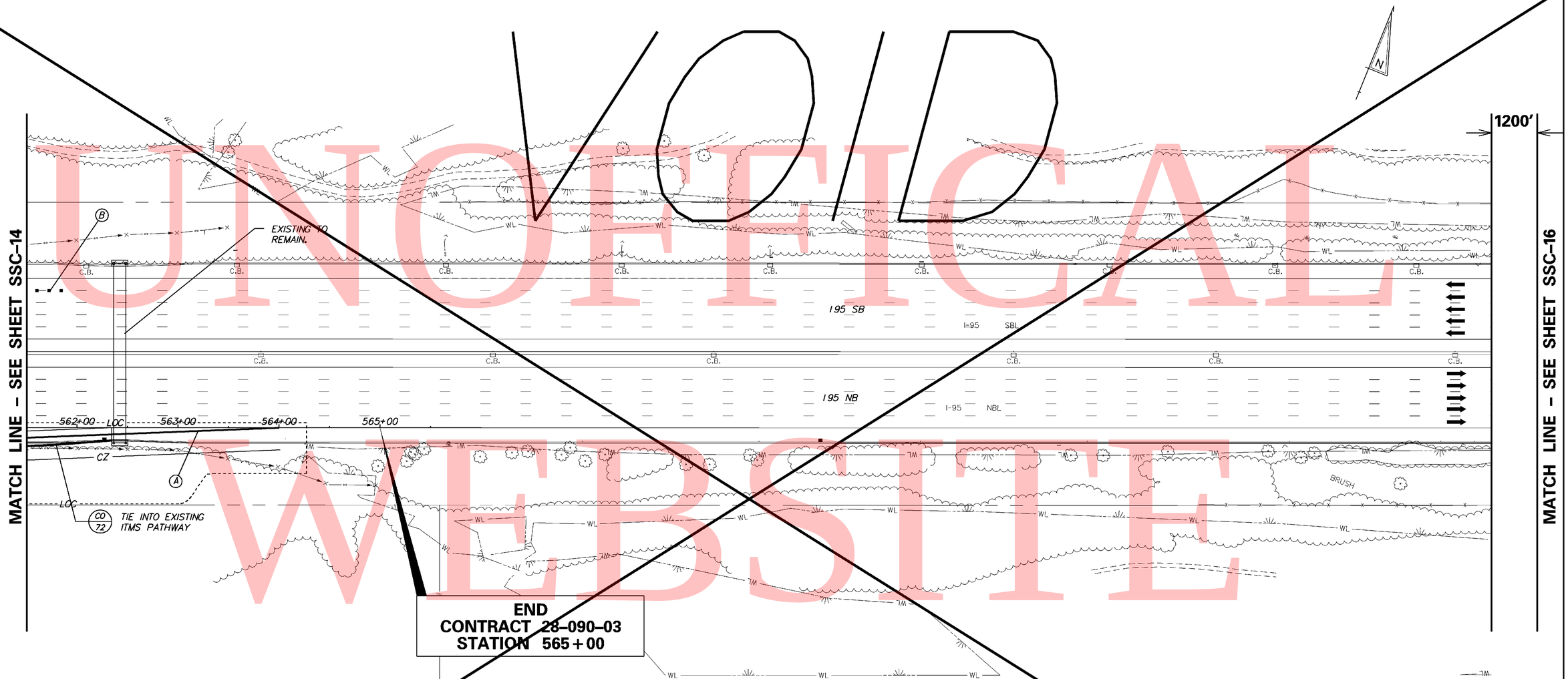

NOTES:

1. ALL PROPOSED ITMS CONNECTIONS AND TERMINATIONS SHALL BE COMPLETED BY DELDOT TRAFFIC FORCES. THE CONTRACTOR SHALL CONTACT DELDOTS SIGNAL CONSTRUCTION MANAGER AT 302.222.5920 TEN (10) DAYS PRIOR TO REQUIRED WORK.
2. ALL UNDERGROUND ITMS FACILITIES TO BE INSTALLED BY THE CONTRACTOR. PRIOR TO COMPLETION OF UNDERGROUND FACILITIES THE CONTRACTOR SHALL CONTACT DELDOT'S SIGNAL CONSTRUCTION MANAGER AT 302.222.5920 TEN (10) DAYS PRIOR TO COMPLETION OF FACILITY.
3. ALL PROPOSED ITMS DEVICE TO BE FURNISHED AND INSTALLED BY DELDOT TRAFFIC FORCES. UPON CONTACT BY THE CONTRACTOR DELDOT TRAFFIC FORCES WILL DEVELOP A SCHEDULE OF WHEN WORK CAN BE PERFORMED AVOIDING CONFLICTS WITH THE GENERAL CONTRACTORS SCHEDULE.
4. CONTRACTOR SHALL BE RESPONSIBLE FOR ALL INSTALLATION AND REMOVAL OF ALL PROPOSED, TEMPORARY AND EXISTING MARKINGS AS REQUIRED. ALL PROPOSED MARKINGS SHALL TIE INTO EXISTING MARKINGS IN ACCORDANCE WITH THE MUTCD AND AS DIRECTED BY THE DELDOT'S CONSTRUCTION ENGINEER.
5. THE CONTRACTOR SHALL INSTALL RAISED PAVEMENT MARKERS WITHIN THE PROJECT LIMITS IN ACCORDANCE WITH THE DE-MUTCD.

SIGNING LEGEND	
①	REMOVE EXISTING SIGN
②	EXISTING SIGN TO REMAIN
③	PLACE NEW SIGN
④	RENEW EXISTING SIGN
⑤	REPOSITION EXISTING SIGN

PAVEMENT MARKINGS LEGEND

SYMBOL	ITEM	QUANTITY
Ⓐ	6" SOLID WHITE EPOXY RESIN PAVEMENT STRIPING (ITEM 748507)	250 LF
Ⓑ	12" DASHED WHITE EPOXY RESIN PAVEMENT STRIPING, 3' LINE & 9' GAP (ITEM 748509)	10 LF

CONDUIT RUN SCHEDULE

CR*	*OF CON	SIZE	LENGTH	B/T/O	AMOUNT AND TYPE OF CABLE/ WIRE
72	Pathway Information Shown on Sheet SSC-14				

B = BORE, T = TRENCH, O = OPEN CUT.

SSC-15

DELAWARE DEPARTMENT OF TRANSPORTATION

ADDENDUMS / REVISIONS	
ADDENDUM NO. 3 , VOIDED SHEET 725	
MODIFIED ITMS DESIGN SEE SHEET 725A,	
2/17/11 JCR	

SCALE 0 50 100 150 FEET

SR1 / I-95 INTERCHANGE

CONTRACT	BRIDGE NO.
28-090-03	
COUNTY	DESIGNED BY:
NEW CASTLE	CHECKED BY:

SIGNING, STRIPING & CONDUIT PLAN

SHEET NO.	TOTAL SHTS.
725	803

UNOFFICIAL WEBSITE COPY

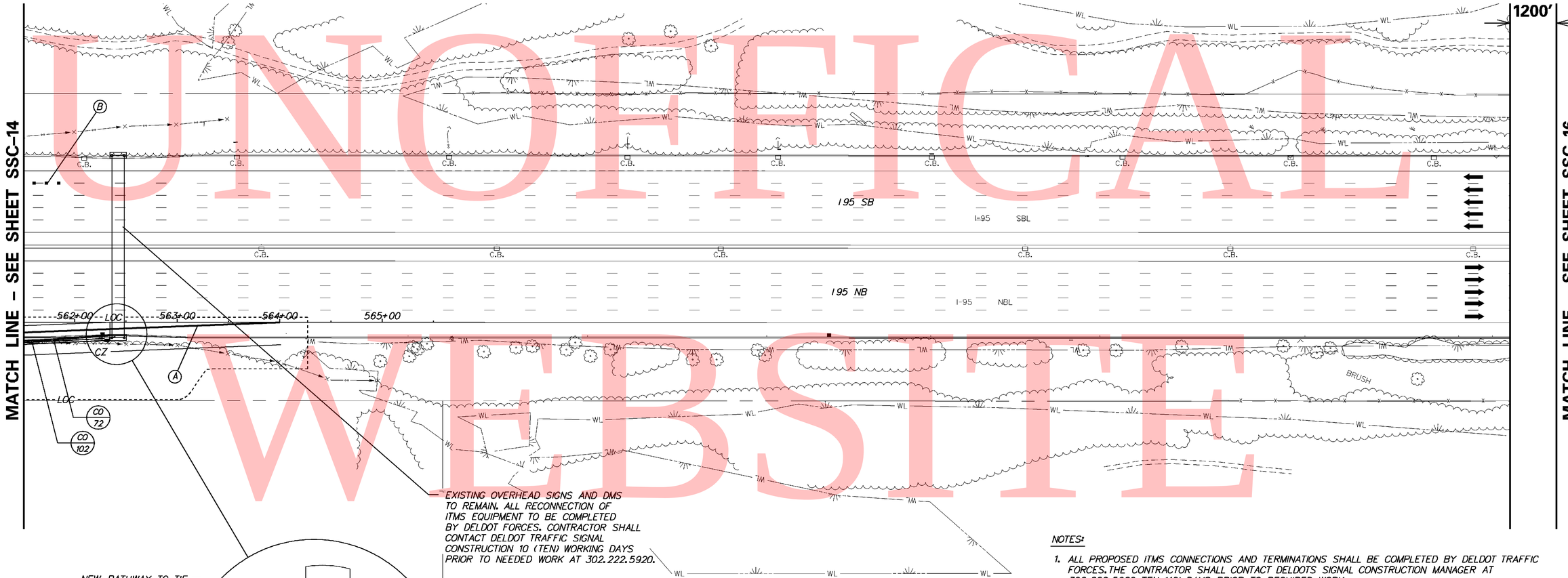

CONDUIT RUN SCHEDULE

CR#	#OF CON	SIZE	LENGTH	B/T/O	AMOUNT AND TYPE OF CABLE/ WIRE
72	Pathway Information Shown on Sheet SSC-14				
102	Pathway Information Shown on Sheet SSC-14				
103	2	2.5"	10'	T	Comm. Cable
104	2	2"/4"	10'	T	Comm. Cable
105	1	2.5"	15'	T	Comm. Cable

B = BORE, T = TRENCH, O = OPEN CUT.

NOTES:

1. ALL PROPOSED ITMS CONNECTIONS AND TERMINATIONS SHALL BE COMPLETED BY DELDOT TRAFFIC FORCES. THE CONTRACTOR SHALL CONTACT DELDOTS SIGNAL CONSTRUCTION MANAGER AT 302.222.5920 TEN (10) DAYS PRIOR TO REQUIRED WORK
2. ALL UNDERGROUND ITMS FACILITIES TO BE INSTALLED BY THE CONTRACTOR. PRIOR TO COMPLETION OF UNDERGROUND FACILITIES THE CONTRACTOR SHALL CONTACT DELDOT'S SIGNAL CONSTRUCTION MANAGER AT 302.222.5920 TEN (10) DAYS PRIOR TO COMPLETION OF FACILITY.
3. ALL PROPOSED ITMS DEVICE TO BE FURNISHED AND INSTALLED BY DELDOT TRAFFIC FORCES. UPON CONTACT BY THE CONTRACTOR DELDOT TRAFFIC FORCES WILL DEVELOP A SCHEDULE OF WHEN WORK CAN BE PERFORMED AVOIDING CONFLICTS WITH THE GENERAL CONTRACTORS SCHEDULE.
4. CONTRACTOR SHALL BE RESPONSIBLE FOR ALL INSTALLATION AND REMOVAL OF ALL PROPOSED, TEMPORARY AND EXISTING MARKINGS AS REQUIRED. ALL PROPOSED MARKINGS SHALL TIE INTO EXISTING MARKINGS IN ACCORDANCE WITH THE MUTCD AND AS DIRECTED BY THE DELDOT'S CONSTRUCTION ENGINEER.
5. THE CONTRACTOR SHALL INSTALL RAISED PAVEMENT MARKERS WITHIN THE PROJECT LIMITS IN ACCORDANCE WITH THE DE-MUTCD.

SIGNING LEGEND

①	REMOVE EXISTING SIGN
②	EXISTING SIGN TO REMAIN
③	PLACE NEW SIGN
④	RENEW EXISTING SIGN
⑤	REPOSITION EXISTING SIGN

PAVEMENT MARKINGS LEGEND

SYMBOL	ITEM	QUANTITY
Ⓐ	6" SOLID WHITE EPOXY RESIN PAVEMENT STRIPING (ITEM 748507)	250 LF
Ⓑ	12" DASHED WHITE EPOXY RESIN PAVEMENT STRIPING, 3' LINE & 9' GAP (ITEM 748509)	10 LF

2/16/2011 4:49:49 PM
M:\PROJECTS\15*59_DELTRNPK\SRIMALL\CADD\2809003\PLANS\CP93_SSC_SR1.DGN

DELAWARE
DEPARTMENT OF TRANSPORTATION

ADDENDUMS / REVISIONS	
ADDENDUM NO. 2 THIS SHEET 725A	
REPLACES VOIDED SHEET 725	
02/18/2011, JCR	

SCALE
0 50 100 150
FEET

SR1 / I-95 INTERCHANGE

CONTRACT	BRIDGE NO.
28-090-03	DESIGNED BY: RK&K
COUNTY	CHECKED BY: JCR
NEW CASTLE	

SIGNING, STRIPING & CONDUIT PLAN

SSC-15

SHEET NO.	TOTAL SHTS.
725A	803

UNOFFICIAL WEBSITE COPY

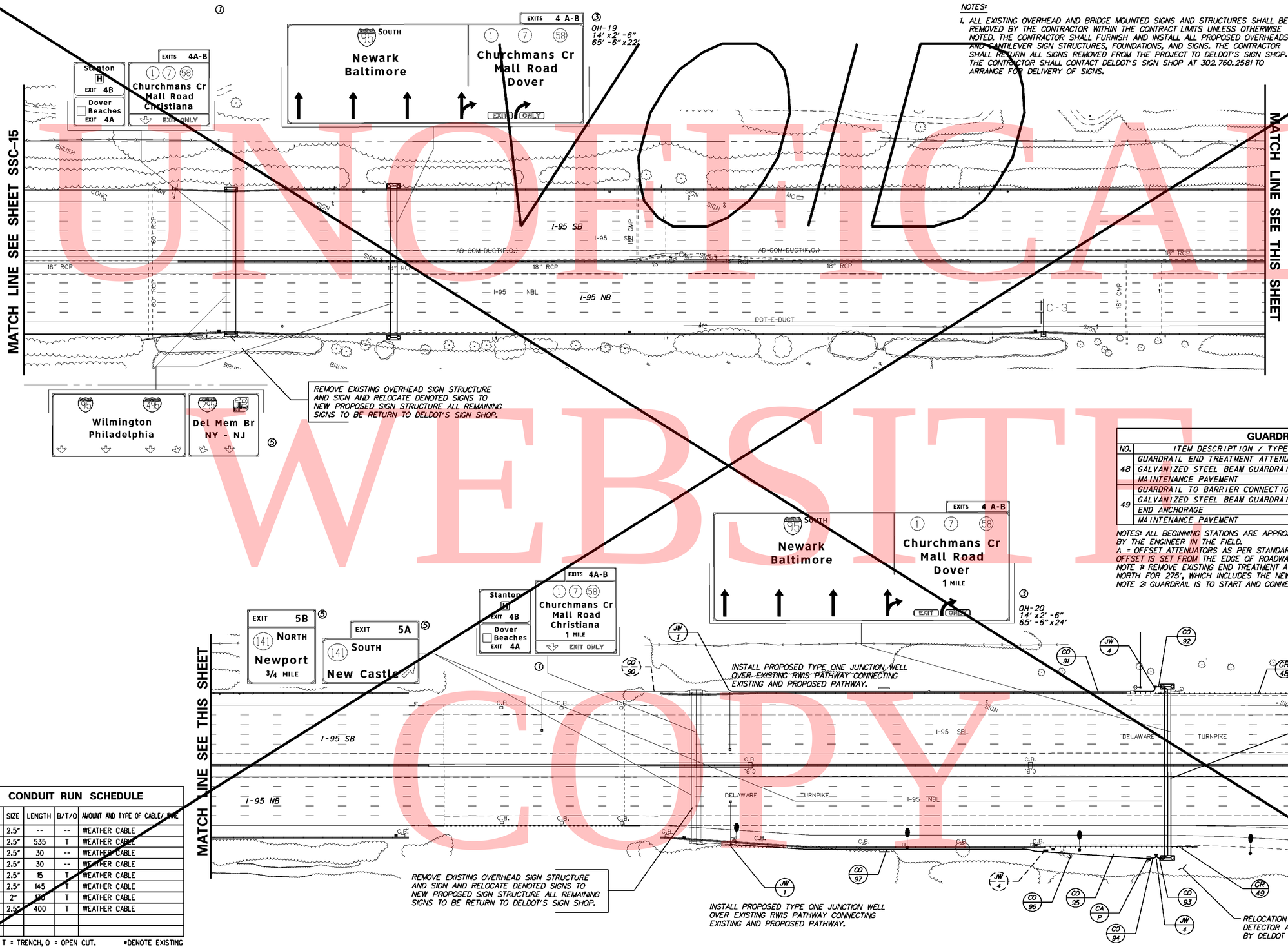

NOTES:

1. ALL EXISTING OVERHEAD AND BRIDGE MOUNTED SIGNS AND STRUCTURES SHALL BE REMOVED BY THE CONTRACTOR WITHIN THE CONTRACT LIMITS UNLESS OTHERWISE NOTED. THE CONTRACTOR SHALL FURNISH AND INSTALL ALL PROPOSED OVERHEADS AND CANTILEVER SIGN STRUCTURES, FOUNDATIONS, AND SIGNS. THE CONTRACTOR SHALL RETURN ALL SIGNS REMOVED FROM THE PROJECT TO DELDOT'S SIGN SHOP. THE CONTRACTOR SHALL CONTACT DELDOT'S SIGN SHOP AT 302.760.2581 TO ARRANGE FOR DELIVERY OF SIGNS.

SIGNING LEGEND	
①	REMOVE EXISTING SIGN
②	EXISTING SIGN TO REMAIN
③	PLACE NEW SIGN
④	RENEW EXISTING SIGN
⑤	REPOSITION EXISTING SIGN

GUARDRAIL SCHEDULE

NO.	ITEM DESCRIPTION / TYPE	BEGIN STA.	OFFSET	LENGTH
48	GUARDRAIL END TREATMENT ATTENUATOR, TYPE 1	NOTE 1	A	1 EA.
	GALVANIZED STEEL BEAM GUARDRAIL, TYPE 1		-14.00'	225.00'
	MAINTENANCE PAVEMENT			100 S.Y.
49	GUARDRAIL TO BARRIER CONNECTION (EXIT TYPE)	NOTE 2	14.00'	1 EA.
	GALVANIZED STEEL BEAM GUARDRAIL, TYPE 1		14.00'	175.00'
	END ANCHORAGE		14.00'	1 EA.
	MAINTENANCE PAVEMENT			83 S.Y.

NOTES: ALL BEGINNING STATIONS ARE APPROXIMATE. EXACT LOCATIONS ARE TO BE DETERMINED BY THE ENGINEER IN THE FIELD.
A = OFFSET ATTENUATORS AS PER STANDARD DETAILS.
OFFSET IS SET FROM THE EDGE OF ROADWAY CLOSEST TO THE OVERHEAD SIGN STRUCTURE.
NOTE 1: REMOVE EXISTING END TREATMENT ATTENUATOR AND CONNECT NEW GUARDRAIL CONTINUING NORTH FOR 275', WHICH INCLUDES THE NEW END TREATMENT ATTENUATOR.
NOTE 2: GUARDRAIL IS TO START AND CONNECT TO THE END OF THE EXISTING BARRIER.

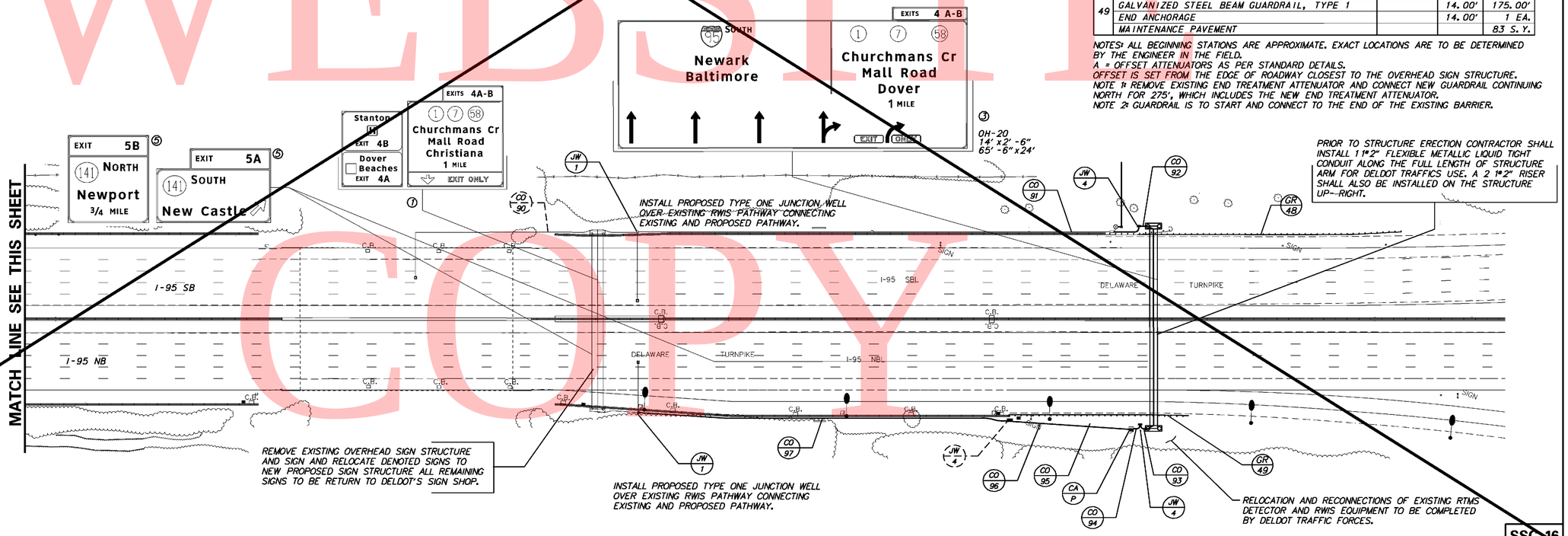

CONDUIT RUN SCHEDULE

CR*	*OF CON	SIZE	LENGTH	B/T/O	AMOUNT AND TYPE OF CABLE/ WIRE
*90	1	2.5"	--	--	WEATHER CABLE
91	1	2.5"	535	T	WEATHER CABLE
92	1	2.5"	30	--	WEATHER CABLE
93	1	2.5"	30	--	WEATHER CABLE
94	1	2.5"	15	T	WEATHER CABLE
95	1	2.5"	145	T	WEATHER CABLE
96	1	2"	130	T	WEATHER CABLE
97	1	2.5"	400	T	WEATHER CABLE

B = BORE, T = TRENCH, O = OPEN CUT. *DENOTE EXISTING

DELAWARE
DEPARTMENT OF TRANSPORTATION

ADDENDUMS / REVISIONS
ADDENDUM NO. 3 VOIDED SHEET
MODIFIED ITMS DESIGN SEE SHEET 726A, 02/18/2011, JCR

SCALE
0 60 120 180
FEET

SR1 / I-95 INTERCHANGE

CONTRACT	BRIDGE NO.
28-090-03	
COUNTY	DESIGNED BY:
NEW CASTLE	CHECKED BY:

SIGNING, STRIPING & CONDUIT PLAN

SSC-16

SHEET NO.	TOTAL SHTS.
726	803

UNOFFICIAL WEBSITE COPY

NOTES:

1. ALL EXISTING OVERHEAD AND BRIDGE MOUNTED SIGNS AND STRUCTURES SHALL BE REMOVED BY THE CONTRACTOR WITHIN THE CONTRACT LIMITS UNLESS OTHERWISE NOTED. THE CONTRACTOR SHALL FURNISH AND INSTALL ALL PROPOSED OVERHEADS AND CANTILEVER SIGN STRUCTURES, FOUNDATIONS, AND SIGNS. THE CONTRACTOR SHALL RETURN ALL SIGNS REMOVED FROM THE PROJECT TO DELDOT'S SIGN SHOP. THE CONTRACTOR SHALL CONTACT DELDOT'S SIGN SHOP AT 302.760.2581 TO ARRANGE FOR DELIVERY OF SIGNS.

SIGNING LEGEND	
①	REMOVE EXISTING SIGN
②	EXISTING SIGN TO REMAIN
③	PLACE NEW SIGN
④	RENEW EXISTING SIGN
⑤	REPOSITION EXISTING SIGN

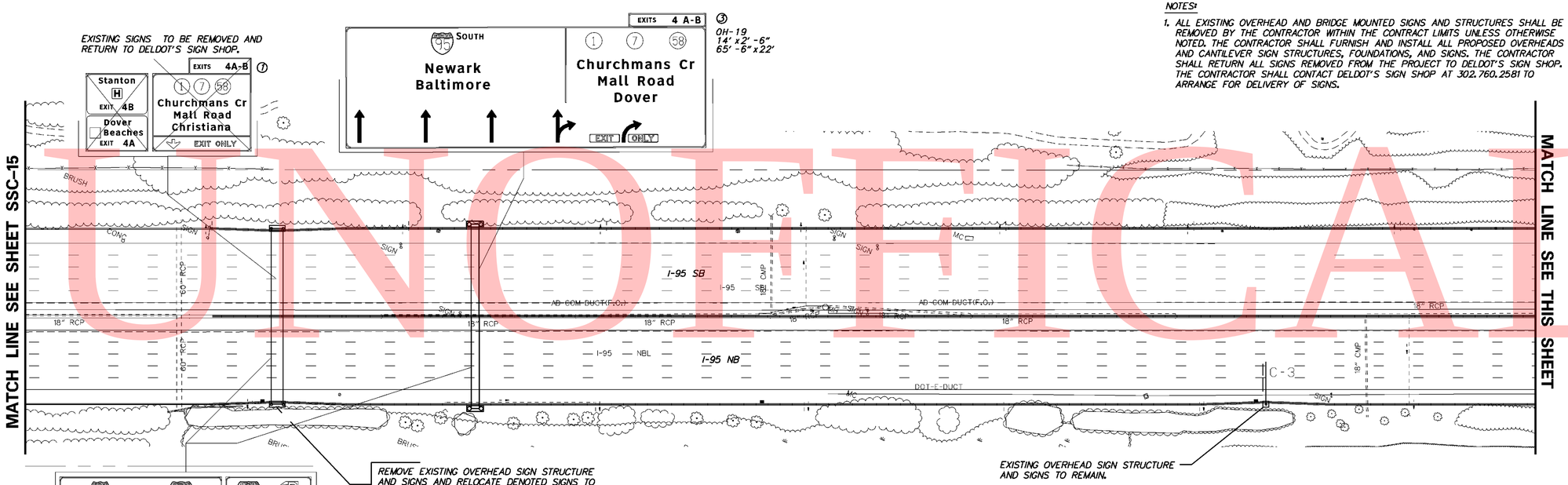

GUARDRAIL SCHEDULE

NO.	ITEM DESCRIPTION / TYPE	BEGIN STA.	OFFSET	LENGTH
48	GUARDRAIL END TREATMENT ATTENUATOR, TYPE 1	NOTE 1	A	1 EA.
	GALVANIZED STEEL BEAM GUARDRAIL, TYPE 1		-14.00'	225.00'
	MAINTENANCE PAVEMENT			100 S.Y.
49	GUARDRAIL TO BARRIER CONNECTION (EXIT TYPE)	NOTE 2	14.00'	1 EA.
	GALVANIZED STEEL BEAM GUARDRAIL, TYPE 1		14.00'	175.00'
	END ANCHORAGE		14.00'	1 EA.
	MAINTENANCE PAVEMENT			83 S.Y.

NOTES: ALL BEGINNING STATIONS ARE APPROXIMATE. EXACT LOCATIONS ARE TO BE DETERMINED BY THE ENGINEER IN THE FIELD.
A = OFFSET ATTENUATORS AS PER STANDARD DETAILS.
OFFSET IS SET FROM THE EDGE OF ROADWAY CLOSEST TO THE OVERHEAD SIGN STRUCTURE.
NOTE 1: REMOVE EXISTING END TREATMENT ATTENUATOR AND CONNECT NEW GUARDRAIL CONTINUING NORTH FOR 275', WHICH INCLUDES THE NEW END TREATMENT ATTENUATOR.
NOTE 2: GUARDRAIL IS TO START AND CONNECT TO THE END OF THE EXISTING BARRIER.

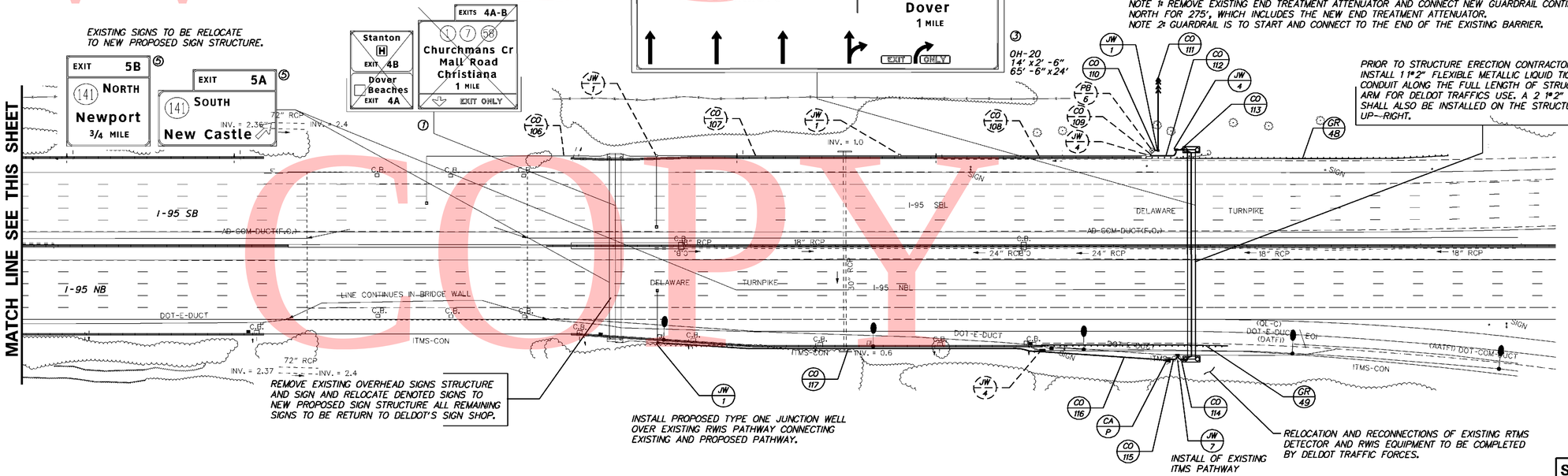

CONDUIT RUN SCHEDULE

CR*	*OF CON	SIZE	LENGTH	B/T/O	AMOUNT AND TYPE OF CABLE/ WIRE
*106	1	1.5"	--	--	Weather Cable
*107	1	2.5"	--	--	Weather Cable
*108	1	2.5"	--	--	Weather Cable
*109	1	2.5"	--	--	Weather Cable
** 110	1	2"	5'	T	Power
** 111	1	2"	250'	B	Power
112	1	4"	35'	T	Weather Cable Comm. Cable
113	1	2.5"	15'	T	Weather Cable Comm. Cable
114	1	2.5"	30'	T	Weather Cable Comm. Cable
115	1	2.5"	15'	T	Weather Cable Comm. Cable
116	1	2.5"	130'	T	Weather Cable
117	1	2.5"	400	T	Weather Cable

B = BORE, T = TRENCH, O = OPEN CUT. *DENOTE EXISTING
** CONDUIT TO BE INSTALLED BY DELDOT TRAFFIC

2/16/2011 11:34:21 AM
M:\PROJECTS\33+59_DEL TRNPK\SR1WALL\CADD\2809003\PLANS\CP94_SSC_SR1.DGN

DELAWARE DEPARTMENT OF TRANSPORTATION

ADDENDUMS / REVISIONS	
ADDENDUM NO. 3 THIS SHEET 726A	
REPLACES VOIDED SHEET 726	
02/18/2011, JCR	

SCALE 0 60 120 180 FEET

SR1 / I-95 INTERCHANGE

CONTRACT	BRIDGE NO.
28-090-03	
COUNTY	DESIGNED BY: RK&K
NEW CASTLE	CHECKED BY: JCR

SIGNING, STRIPING & CONDUIT PLAN

SSC-16

SHEET NO.	TOTAL SHTS.
726A	803

UNOFFICIAL WEBSITE COPY

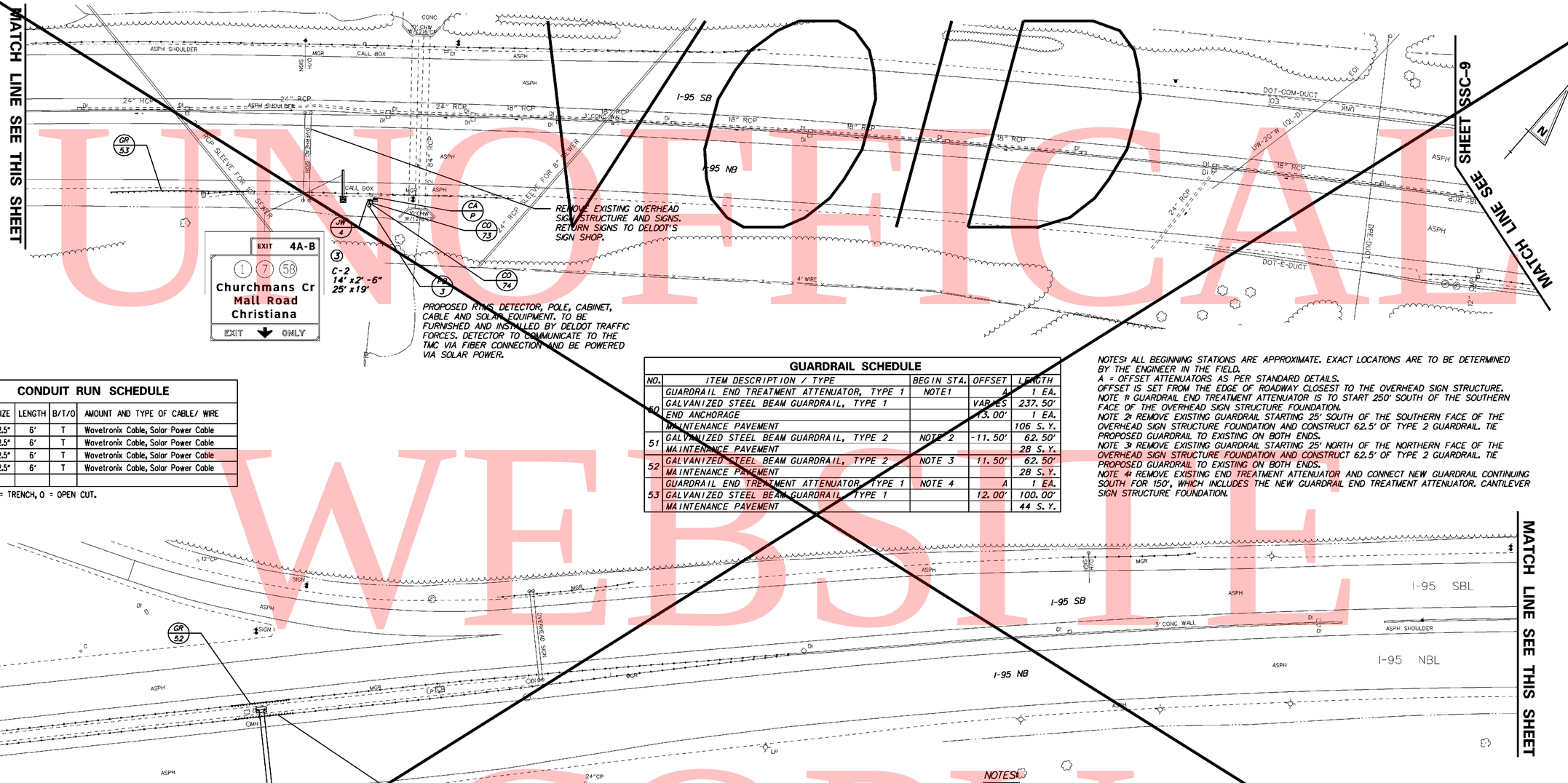

CONDUIT RUN SCHEDULE

CR*	#OF CON	SIZE	LENGTH	B/T/O	AMOUNT AND TYPE OF CABLE/ WIRE
73	3	2.5"	6'	T	Wavetronix Cable, Solar Power Cable
74	2	2.5"	6'	T	Wavetronix Cable, Solar Power Cable
75	3	2.5"	6'	T	Wavetronix Cable, Solar Power Cable
76	2	2.5"	6'	T	Wavetronix Cable, Solar Power Cable

B = BORE, T = TRENCH, O = OPEN CUT.

GUARDRAIL SCHEDULE

NO.	ITEM DESCRIPTION / TYPE	BEGIN STA.	OFFSET	LENGTH
50	GUARDRAIL END TREATMENT ATTENUATOR, TYPE 1	NOTE1	A	1 EA.
	GALVANIZED STEEL BEAM GUARDRAIL, TYPE 1		VARIES	237.50'
	END ANCHORAGE		13.00'	1 EA.
	MAINTENANCE PAVEMENT			106 S.Y.
51	GALVANIZED STEEL BEAM GUARDRAIL, TYPE 2	NOTE 2	-11.50'	62.50'
	MAINTENANCE PAVEMENT			28 S.Y.
52	GALVANIZED STEEL BEAM GUARDRAIL, TYPE 2	NOTE 3	11.50'	62.50'
	MAINTENANCE PAVEMENT			28 S.Y.
53	GUARDRAIL END TREATMENT ATTENUATOR, TYPE 1	NOTE 4	A	1 EA.
	GALVANIZED STEEL BEAM GUARDRAIL, TYPE 1		12.00'	100.00'
	MAINTENANCE PAVEMENT			44 S.Y.

NOTES: ALL BEGINNING STATIONS ARE APPROXIMATE. EXACT LOCATIONS ARE TO BE DETERMINED BY THE ENGINEER IN THE FIELD.
A = OFFSET ATTENUATORS AS PER STANDARD DETAILS.
OFFSET IS SET FROM THE EDGE OF ROADWAY CLOSEST TO THE OVERHEAD SIGN STRUCTURE.
NOTE 1: GUARDRAIL END TREATMENT ATTENUATOR IS TO START 250' SOUTH OF THE SOUTHERN FACE OF THE OVERHEAD SIGN STRUCTURE FOUNDATION.
NOTE 2: REMOVE EXISTING GUARDRAIL STARTING 25' SOUTH OF THE SOUTHERN FACE OF THE OVERHEAD SIGN STRUCTURE FOUNDATION AND CONSTRUCT 62.5' OF TYPE 2 GUARDRAIL. TIE PROPOSED GUARDRAIL TO EXISTING ON BOTH ENDS.
NOTE 3: REMOVE EXISTING GUARDRAIL STARTING 25' NORTH OF THE NORTHERN FACE OF THE OVERHEAD SIGN STRUCTURE FOUNDATION AND CONSTRUCT 62.5' OF TYPE 2 GUARDRAIL. TIE PROPOSED GUARDRAIL TO EXISTING ON BOTH ENDS.
NOTE 4: REMOVE EXISTING END TREATMENT ATTENUATOR AND CONNECT NEW GUARDRAIL CONTINUING SOUTH FOR 150', WHICH INCLUDES THE NEW GUARDRAIL END TREATMENT ATTENUATOR. CANTILEVER SIGN STRUCTURE FOUNDATION.

SIGNING LEGEND

1	REMOVE EXISTING SIGN
2	EXISTING SIGN TO REMAIN
3	PLACE NEW SIGN
4	RENEW EXISTING SIGN
5	REPOSITION EXISTING SIGN

NOTES:

1. ALL PROPOSED ITMS CONNECTIONS AND TERMINATIONS SHALL BE COMPLETED BY DELDOT FORCES. THE CONTRACTOR SHALL CONTACT DELDOTS SIGNAL CONSTRUCTION MANAGER AT 302.222.5920 TEN (10) DAYS PRIOR TO REQUIRED WORK
2. ALL UNDERGROUND ITMS FACILITIES TO BE INSTALLED BY THE CONTRACTOR. PRIOR TO COMPLETION OF UNDERGROUND FACILITIES THE CONTRACTOR SHALL CONTACT DELDOT'S SIGNAL CONSTRUCTION MANAGER AT 302.222.5920 TEN (10) DAYS PRIOR TO COMPLETION OF FACILITY.
3. ALL PROPOSED ITMS DEVICE TO BE FURNISHED AND INSTALLED BY DELDOT TRAFFIC FORCES. UPON CONTACT BY THE CONTRACTOR DELDOT TRAFFIC FORCES WILL DEVELOP A SCHEDULE OF WHEN WORK CAN BE PERFORMED AVOIDING CONFLICTS WITH THE GENERAL CONTRACTORS SCHEDULE.
4. ALL EXISTING OVERHEAD AND BRIDGE MOUNTED SIGNS AND STRUCTURES SHALL BE REMOVED BY THE CONTRACTOR WITHIN THE CONTRACT LIMITS UNLESS OTHERWISE NOTED. THE CONTRACTOR SHALL FURNISH AND INSTALL ALL PROPOSED OVERHEADS AND CANTILEVER SIGN STRUCTURES, FOUNDATIONS, AND SIGNS. THE CONTRACTOR SHALL RETURN ALL SIGNS REMOVED FROM THE PROJECT TO DELDOT'S SIGN SHOP. THE CONTRACTOR SHALL CONTACT DELDOT'S SIGN SHOP AT 302.760.2581 TO ARRANGE FOR DELIVERY OF SIGNS.

DELAWARE DEPARTMENT OF TRANSPORTATION

ADDENDUMS / REVISIONS	
ADDENDUM NO. 3 VOIDED SHEET	
MODIFIED ITMS DESIGN SEE SHEET 727A,	
02/18/2011, JCR	

SCALE 0 60 120 180 FEET

SR1 / I-95 INTERCHANGE

CONTRACT	BRIDGE NO.
28-090-03	
COUNTY	DESIGNED BY:
NEW CASTLE	CHECKED BY:

SIGNING, STRIPING & CONDUIT PLAN

SSC-17
SHEET NO. 727
TOTAL SHTS. 803

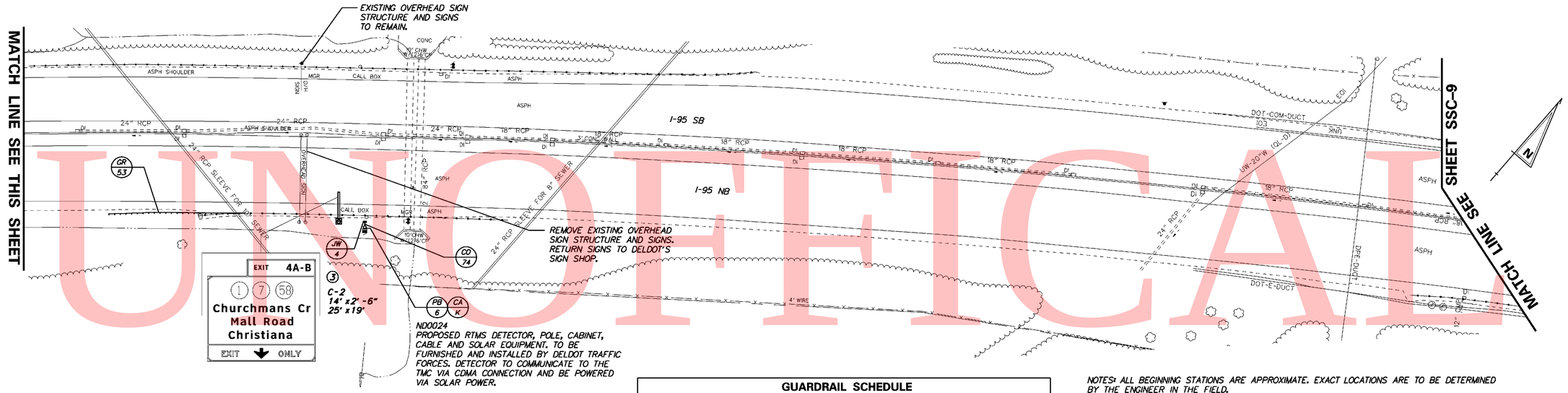

CONDUIT RUN SCHEDULE

CR*	*OF CON	SIZE	LENGTH	B/T/O	AMOUNT AND TYPE OF CABLE/ WIRE
73					
74	2	2.5"	6'	T	Empty
75					
76	2	2.5"	6'	T	Empty

B = BORE, T = TRENCH, O = OPEN CUT.

GUARDRAIL SCHEDULE

NO.	ITEM DESCRIPTION / TYPE	BEGIN STA.	OFFSET	LENGTH
50	GUARDRAIL END TREATMENT ATTENUATOR, TYPE 1	NOTE1	A	1 EA.
	GALVANIZED STEEL BEAM GUARDRAIL, TYPE 1		VARIES	237.50'
	END ANCHORAGE		13.00'	1 EA.
	MAINTENANCE PAVEMENT			106 S.Y.
51	GALVANIZED STEEL BEAM GUARDRAIL, TYPE 2	NOTE 2	-11.50'	62.50'
	MAINTENANCE PAVEMENT			28 S.Y.
52	GALVANIZED STEEL BEAM GUARDRAIL, TYPE 2	NOTE 3	11.50'	62.50'
	MAINTENANCE PAVEMENT			28 S.Y.
53	GUARDRAIL END TREATMENT ATTENUATOR, TYPE 1	NOTE 4	A	1 EA.
	GALVANIZED STEEL BEAM GUARDRAIL, TYPE 1		12.00'	100.00'
	MAINTENANCE PAVEMENT			44 S.Y.

NOTES: ALL BEGINNING STATIONS ARE APPROXIMATE. EXACT LOCATIONS ARE TO BE DETERMINED BY THE ENGINEER IN THE FIELD.
A = OFFSET ATTENUATORS AS PER STANDARD DETAILS.
OFFSET IS SET FROM THE EDGE OF ROADWAY CLOSEST TO THE OVERHEAD SIGN STRUCTURE.
NOTE 1: GUARDRAIL END TREATMENT ATTENUATOR IS TO START 250' SOUTH OF THE SOUTHERN FACE OF THE OVERHEAD SIGN STRUCTURE FOUNDATION.
NOTE 2: REMOVE EXISTING GUARDRAIL STARTING 25' SOUTH OF THE SOUTHERN FACE OF THE OVERHEAD SIGN STRUCTURE FOUNDATION AND CONSTRUCT 62.5' OF TYPE 2 GUARDRAIL. TIE PROPOSED GUARDRAIL TO EXISTING ON BOTH ENDS.
NOTE 3: REMOVE EXISTING GUARDRAIL STARTING 25' NORTH OF THE NORTHERN FACE OF THE OVERHEAD SIGN STRUCTURE FOUNDATION AND CONSTRUCT 62.5' OF TYPE 2 GUARDRAIL. TIE PROPOSED GUARDRAIL TO EXISTING ON BOTH ENDS.
NOTE 4: REMOVE EXISTING END TREATMENT ATTENUATOR AND CONNECT NEW GUARDRAIL CONTINUING SOUTH FOR 150', WHICH INCLUDES THE NEW GUARDRAIL END TREATMENT ATTENUATOR. CANTILEVER SIGN STRUCTURE FOUNDATION.

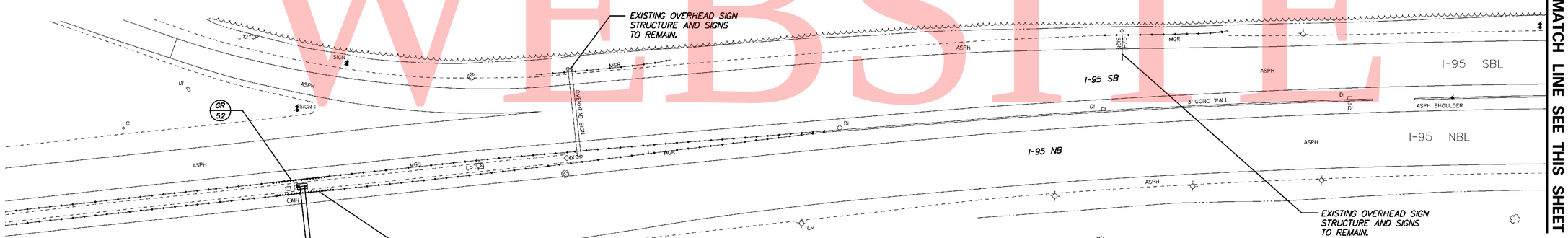

ND0023
PROPOSED RTMS DETECTOR, POLE, CABINET, CABLE AND SOLAR EQUIPMENT. TO BE FURNISHED AND INSTALLED BY DELDOT TRAFFIC FORCES. DETECTOR TO COMMUNICATE TO THE TMC VIA CDMA CONNECTION AND BE POWERED VIA SOLAR POWER.

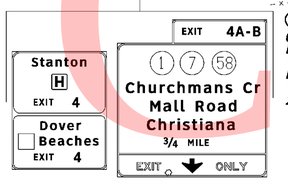

3 OH-21
Panel A
12' x15'
Panel B
14' x2'-6"
25' x22'

SIGNING LEGEND

1	REMOVE EXISTING SIGN
2	EXISTING SIGN TO REMAIN
3	PLACE NEW SIGN
4	RENEW EXISTING SIGN
5	REPOSITION EXISTING SIGN

NOTES:

1. ALL PROPOSED ITMS CONNECTIONS AND TERMINATIONS SHALL BE COMPLETED BY DELDOT FORCES. THE CONTRACTOR SHALL CONTACT DELDOTS SIGNAL CONSTRUCTION MANAGER AT 302.222.5920 TEN (10) DAYS PRIOR TO REQUIRED WORK
2. ALL UNDERGROUND ITMS FACILITIES TO BE INSTALLED BY THE CONTRACTOR. PRIOR TO COMPLETION OF UNDERGROUND FACILITIES THE CONTRACTOR SHALL CONTACT DELDOT'S SIGNAL CONSTRUCTION MANAGER AT 302.222.5920 TEN (10) DAYS PRIOR TO COMPLETION OF FACILITY.
3. ALL PROPOSED ITMS DEVICE TO BE FURNISHED AND INSTALLED BY DELDOT TRAFFIC FORCES. UPON CONTACT BY THE CONTRACTOR DELDOT TRAFFIC FORCES WILL DEVELOP A SCHEDULE OF WHEN WORK CAN BE PERFORMED AVOIDING CONFLICTS WITH THE GENERAL CONTRACTORS SCHEDULE.
4. ALL EXISTING OVERHEAD AND BRIDGE MOUNTED SIGNS AND STRUCTURES SHALL BE REMOVED BY THE CONTRACTOR WITHIN THE CONTRACT LIMITS UNLESS OTHERWISE NOTED. THE CONTRACTOR SHALL FURNISH AND INSTALL ALL PROPOSED OVERHEADS AND CANTILEVER SIGN STRUCTURES, FOUNDATIONS, AND SIGNS. THE CONTRACTOR SHALL RETURN ALL SIGNS REMOVED FROM THE PROJECT TO DELDOT'S SIGN SHOP. THE CONTRACTOR SHALL CONTACT DELDOT'S SIGN SHOP AT 302.760.2581 TO ARRANGE FOR DELIVERY OF SIGNS.

UNOFFICIAL WEBSITE COPY

1/27/2009 12:28:48 PM
M:\PROJECTS\23\3059_DELTRNPK\SR1MALL\CADD\2809033\PLANS\CP94A_SSC_SR1.DGN

DELAWARE
DEPARTMENT OF TRANSPORTATION

ADDENDUMS / REVISIONS	
ADDENDUM NO. 3 THIS SHEET 727A	
REPLACES VOIDED SHEET 727	
02/18/2011, JCR	

SCALE
0 60 120 180
FEET

SR1 / I-95 INTERCHANGE

CONTRACT	BRIDGE NO.
28-090-03	DESIGNED BY: RK&K
COUNTY	CHECKED BY: JCR
NEW CASTLE	

SIGNING, STRIPING & CONDUIT PLAN

SSC-17

SHEET NO.	TOTAL SHTS.
727A	803

GUARDRAIL SCHEDULE				
NO.	ITEM DESCRIPTION / TYPE	BEGIN STA.	OFFSET	LENGTH
54	GUARDRAIL END TREATMENT ATTENUATOR, TYPE 1	NOTE 1	A	1 EA.
	GALVANIZED STEEL BEAM GUARDRAIL, TYPE 1		-6.50'	425.00'
	MAINTENANCE PAVEMENT			189 S.Y.
55	GALVANIZED STEEL BEAM GUARDRAIL, TYPE 1	NOTE 2	6.30'	87.50'
	END ANCHORAGE		6.30'	1 EA.
	MAINTENANCE PAVEMENT			39 S.Y.

NOTES: ALL BEGINNING STATIONS ARE APPROXIMATE. EXACT LOCATIONS ARE TO BE DETERMINED BY THE ENGINEER IN THE FIELD.
A = OFFSET ATTENUATORS AS PER STANDARD DETAILS.
OFFSET IS SET FROM THE EDGE OF THE THROUGH LANE TO THE FACE OF THE GUARDRAIL.
NOTE 1: REMOVE EXISTING END TREATMENT ATTENUATOR AND CONNECT NEW GUARDRAIL CONTINUING SOUTH FOR 475', WHICH INCLUDES THE NEW GUARDRAIL END TREATMENT ATTENUATOR.
NOTE 2: REMOVE EXISTING END ANCHORAGE AND CONNECT NEW GUARDRAIL CONTINUING SOUTH FOR 87.50'.

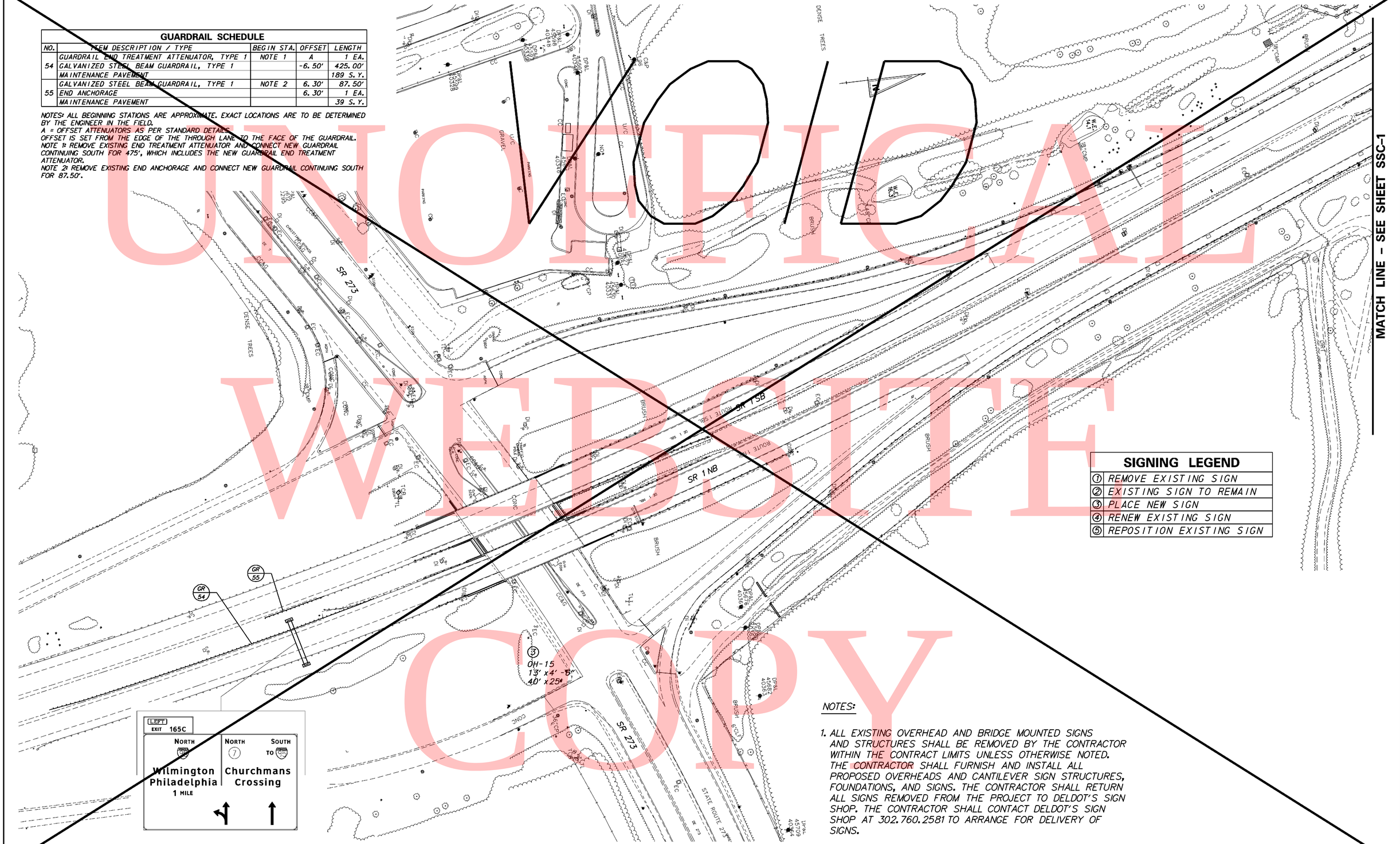

SIGNING LEGEND	
1	REMOVE EXISTING SIGN
2	EXISTING SIGN TO REMAIN
3	PLACE NEW SIGN
4	RENEW EXISTING SIGN
5	REPOSITION EXISTING SIGN

NOTES:

1. ALL EXISTING OVERHEAD AND BRIDGE MOUNTED SIGNS AND STRUCTURES SHALL BE REMOVED BY THE CONTRACTOR WITHIN THE CONTRACT LIMITS UNLESS OTHERWISE NOTED. THE CONTRACTOR SHALL FURNISH AND INSTALL ALL PROPOSED OVERHEADS AND CANTILEVER SIGN STRUCTURES, FOUNDATIONS, AND SIGNS. THE CONTRACTOR SHALL RETURN ALL SIGNS REMOVED FROM THE PROJECT TO DELDOT'S SIGN SHOP. THE CONTRACTOR SHALL CONTACT DELDOT'S SIGN SHOP AT 302.760.2581 TO ARRANGE FOR DELIVERY OF SIGNS.

UNOFFICIAL WEBSITE COPY

SSC-18

DELAWARE DEPARTMENT OF TRANSPORTATION

ADDENDUMS / REVISIONS
ADDENDUM NO. 3 VOIDED SHEET
MODIFIED ITMS DESIGN SEE SHEET 728A,
02/18/2011, JCR

SCALE 0 60 120 180 FEET

SR1 / I-95 INTERCHANGE

CONTRACT	BRIDGE NO.	
28-090-03	DESIGNED BY:	
COUNTY	CHECKED BY:	
NEW CASTLE		

SIGNING, STRIPING & CONDUIT PLAN

SHEET NO. 728
TOTAL SHTS. 803

1/27/2009 1:28:48 PM
M:\PROJECTS\3*59_DELTRNPK\SRIMALL\CADD\2809003\PLANS\CP018_SSC_SR1.DGN

GUARDRAIL SCHEDULE

NO.	ITEM DESCRIPTION / TYPE	BEGIN STA.	OFFSET	LENGTH
54	GUARDRAIL END TREATMENT ATTENUATOR, TYPE 1	NOTE 1	A	1 EA.
	GALVANIZED STEEL BEAM GUARDRAIL, TYPE 1		-6.50'	425.00'
	MAINTENANCE PAVEMENT			189 S.Y.
55	GALVANIZED STEEL BEAM GUARDRAIL, TYPE 1	NOTE 2	6.30'	87.50'
	END ANCHORAGE		6.30'	1 EA.
	MAINTENANCE PAVEMENT			39 S.Y.

NOTES: ALL BEGINNING STATIONS ARE APPROXIMATE. EXACT LOCATIONS ARE TO BE DETERMINED BY THE ENGINEER IN THE FIELD.
A = OFFSET ATTENUATORS AS PER STANDARD DETAILS.
OFFSET IS SET FROM THE EDGE OF THE THROUGH LANE TO THE FACE OF THE GUARDRAIL.
NOTE 1: REMOVE EXISTING END TREATMENT ATTENUATOR AND CONNECT NEW GUARDRAIL CONTINUING SOUTH FOR 475', WHICH INCLUDES THE NEW GUARDRAIL END TREATMENT ATTENUATOR.
NOTE 2: REMOVE EXISTING END ANCHORAGE AND CONNECT NEW GUARDRAIL CONTINUING SOUTH FOR 87.50'.

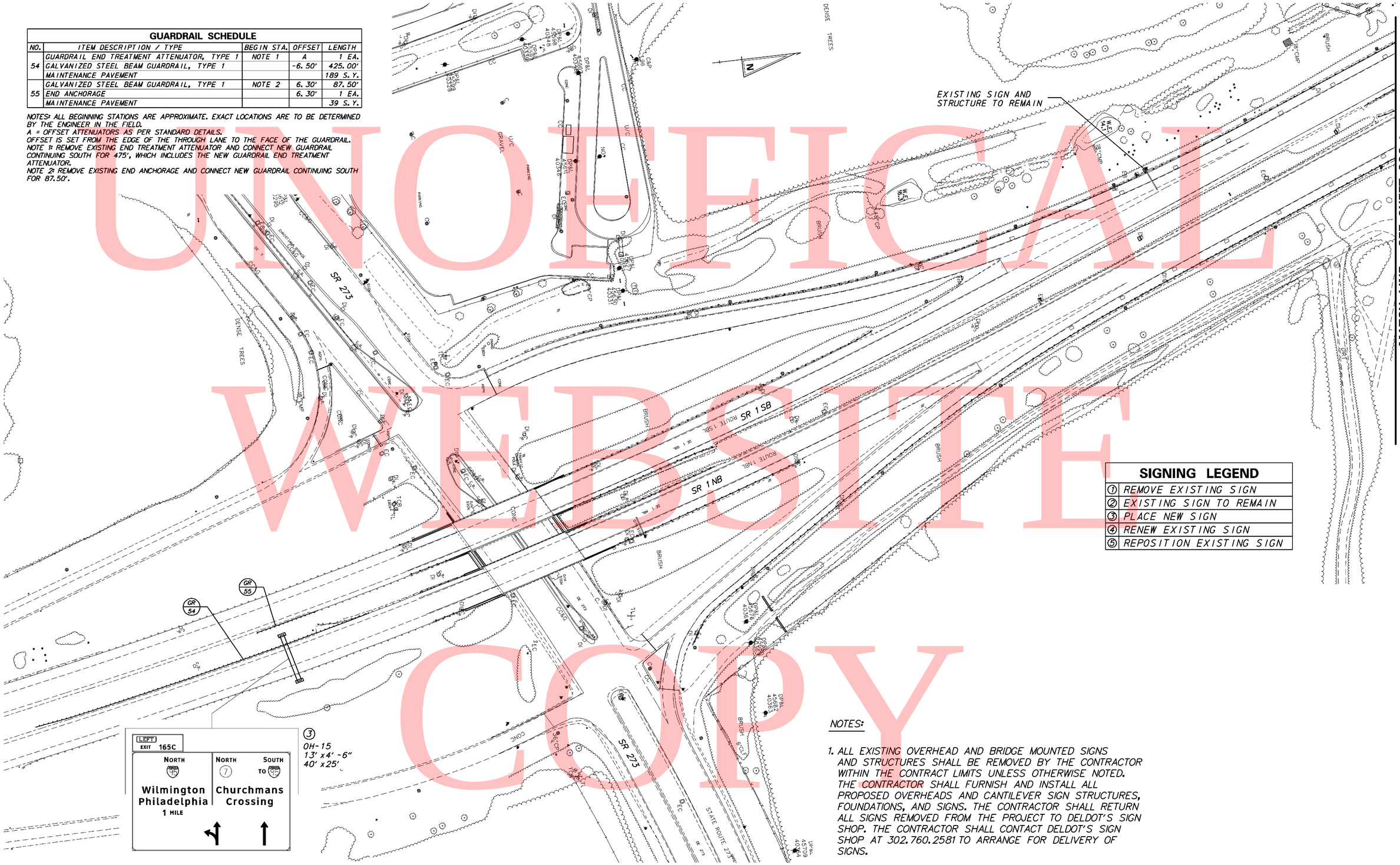

SIGNING LEGEND

①	REMOVE EXISTING SIGN
②	EXISTING SIGN TO REMAIN
③	PLACE NEW SIGN
④	RENEW EXISTING SIGN
⑤	REPOSITION EXISTING SIGN

NOTES:

1. ALL EXISTING OVERHEAD AND BRIDGE MOUNTED SIGNS AND STRUCTURES SHALL BE REMOVED BY THE CONTRACTOR WITHIN THE CONTRACT LIMITS UNLESS OTHERWISE NOTED. THE CONTRACTOR SHALL FURNISH AND INSTALL ALL PROPOSED OVERHEADS AND CANTILEVER SIGN STRUCTURES, FOUNDATIONS, AND SIGNS. THE CONTRACTOR SHALL RETURN ALL SIGNS REMOVED FROM THE PROJECT TO DELDOT'S SIGN SHOP. THE CONTRACTOR SHALL CONTACT DELDOT'S SIGN SHOP AT 302.760.2581 TO ARRANGE FOR DELIVERY OF SIGNS.

MATCH LINE – SEE SHEET SSC-1

UNOFFICIAL WEBSITE COPY

1/27/2009 1:28:48 PM
W:\PROJECTS\3543_DELTRNPK\SR1MALL\CADD\2809003\PLANS\CP948_SSC_SR1.DGN

DELAWARE
DEPARTMENT OF TRANSPORTATION

ADDENDUMS / REVISIONS	
ADDENDUM NO. 3 THIS SHEET 728A	
REPLACES VOIDED SHEET 728	
02/18/2011, JCR	

SCALE
0 60 120 180
FEET

SR1 / I-95 INTERCHANGE

CONTRACT	BRIDGE NO.
28-090-03	
COUNTY	DESIGNED BY: RK&K
NEW CASTLE	CHECKED BY: JCR

SIGNING, STRIPING & CONDUIT PLAN

SSC-18

SHEET NO.	TOTAL SHTS.
728A	803